NEW GOLD RAINY RIVER MINE
APPENDIX E
QUARTERLY AIR REPORTS AND ESDM REPORT

NEW GOLD RAINY RIVER MINE
APPENDIX E.1
QUARTERLY AIR REPORTS

NEW GOLD INC.

RAINY RIVER MINE

AMBIENT AIR QUALITY MONITORING PROGRAM

FIRST QUARTER 2021 REPORT

APRIL 2021

ACRONYMS AND ABBREVIATIONS

$\mu g/m^3$	Microgram per Cubic Metre
AAQC	Ambient Air Quality Criteria
AAQO	Alberta Ambient Air Quality Objectives
ACFM	Cubic Feet Per Minute at Actual Conditions
AEP	Alberta Environment and Parks
ASTM	American Society for Testing and Materials
BCMOE	British Columbia Ministry of the Environment
CAAQS	Canadian Ambient Air Quality Standards
CFM	Cubic Foot Per Minute
Hi-Vol	High Volume Sampler
ICP/AES	Inductively Coupled Plasma / Atomic Emission Spectroscopy
ICP/MS	Inductively Coupled Plasma / Mass Spectrometry
LPM	Litres Per Minute
MECP	Ministry of the Environment, Conservation and Parks
NIST	National Institute of Standards and Technology
NO_2	Nitrogen Dioxide
$PM_{2.5}$	Particulate Matter less than 2.5 microns (µm) in diameter
POI	Point of Impingement
SO_2	Sulphur Dioxide
TSP	Total Suspended Particulate
U.S. EPA	United States Environmental Protection Agency
UTM	Universal Transverse Mercator

TABLE OF CONTENTS

SECTION 1. INTRODUCTION 1

SECTION 2. MONITORING STATIONS 3

2.1 METEOROLOGICAL STATION 3

SECTION 3. ANALYTICAL METHODS 10

3.1 TOTAL SUSPENDED PARTICULATE MATTER (TSP) AND METALS 10
3.2 RESPIRABLE PARTICULATE MATTER ($PM_{2.5}$) 10
3.3 TOTAL DUSTFALL 11
3.4 PASSIVE SAMPLING FOR SO_2 AND NO_2 11

SECTION 4. MONITORING METHODS 13

4.1 HI-VOL AND PQ200 SAMPLERS 13
4.2 DUSTFALL SAMPLERS 13
4.3 PASSIVE SAMPLERS 13

SECTION 5. SAMPLING ISSUES 14

5.1 PERFORMANCE AND SITE AUDITS 14
5.2 EQUIPMENT AND SAMPLING ISSUES 14

SECTION 6. SAMPLING RESULTS 15

6.1 TSP AND METALS 15
6.2 $PM_{2.5}$ 18
6.3 TOTAL DUSTFALL 20
6.4 PASSIVE SO_2 AND NO_2 25

SECTION 7. MITIGATION MEASURES 28

SECTION 8. CONCLUSION 29

SECTION 9. REFERENCES 30

SECTION 10. CLOSING 32

LIST OF TABLES

TABLE 2-1. AMBIENT AIR MONITORING STATIONS 3
TABLE 6-1. TSP SUMMARY STATISTICS 16
TABLE 6-2. MAXIMUM CONCENTRATIONS OF METALS 16
TABLE 6-3. $PM_{2.5}$ SUMMARY STATISTICS 19
TABLE 6-4. TOTAL DUSTFALL SUMMARY STATISTICS 21
TABLE 6-5: MAXIMUM MONTHLY CONCENTRATIONS FOR DUSTFALL METALS 21
TABLE 6-6: SPP1 DUSTFALL SAMPLES VERSUS STOCKPILE SIZE AND WEATHER DATA 24
TABLE 6-7: SUMMARY STATISTICS FOR SO_2 AND NO_2 26

LIST OF FIGURES

FIGURE 2-1. AMBIENT AIR MONITORING STATION LOCATIONS 4
FIGURE 2-2. TAIT ROAD STATION SITING 5
FIGURE 2-3. GALLINGER ROAD STATION SITING 6
FIGURE 2-4. TAIT ROAD STATION DETAILED VIEW 7
FIGURE 2-5. NORTHWEST STATION SITING 8
FIGURE 2-6. SPP1 STATION SITING 9
FIGURE 6-1. TSP SAMPLING RESULTS 17
FIGURE 6-2. MAX METAL SAMPLING RESULT AS A FRACTION OF METAL AAQC 18
FIGURE 6-3. $PM_{2.5}$ SAMPLING RESULTS 20
FIGURE 6-4. DUSTFALL SAMPLING RESULTS AT POI STATIONS 23
FIGURE 6-5. DUSTFALL SAMPLING RESULTS AT ON-SITE STATIONS 23
FIGURE 6-6. DUSTFALL SAMPLING RESULTS AT SPP1 STATION 24
FIGURE 6-7. SPP1 DUSTFALL CONCENTRATIONS VS. STOCKPILE SIZE AND WEATHER DATA 25
FIGURE 6-8. NO_2 AND SO_2 SAMPLING RESULTS 27

LIST OF APPENDICES

APPENDIX A: SAMPLING RESULTS ..... **A**

APPENDIX A-1: TSP, METALS, AND $PM_{2.5}$ SAMPLING RESULTS ..... B
APPENDIX A-2: TOTAL DUSTFALL SAMPLING RESULTS ..... F
APPENDIX A-3: DUSTFALL METALS SAMPLING RESULTS L
APPENDIX A-4: SO_2 AND NO_2 PASSIVE SAMPLING RESULTS ..... P

APPENDIX B: NOTICE OF EXCEEDANCES FOR Q1 2021 ..... **R**

APPENDIX C: LABORATORY RESULTS ..... **S**

APPENDIX D: HI-VOL & PQ200 SAMPLER CALIBRATION SHEETS ..... **T**

APPENDIX E: SAMPLE EDIT LOGS ..... **U**

APPENDIX E-1: TOTAL SUSPENDED PARTICULAR EDIT LOG V
APPENDIX E-2: RESPIRABLE PARTICULATE MATTER EDIT LOG ..... W

Section 1. INTRODUCTION

The following is a summary of the First Quarter 2021 Report results of the Ambient Air Quality Monitoring Program undertaken at New Gold Inc.'s Rainy River Mine located north-west of Emo, Ontario.

In this quarter, New Gold Inc. (New Gold) staff operated and maintained the ambient air quality monitoring sampling stations; communicated with laboratory staff, as required; prepared data summary reports; and performed equipment calibrations at the various monitoring stations, as necessary.

This Quarterly Ambient Air Quality Report addresses the required elements of a Quarterly Report, as defined in the "Operations Manual for Air Quality Monitoring in Ontario" (Ontario Ministry of the Environment, Conservation and Parks, 2019), hereafter referred to as the Operations Manual. The following information is provided:

- Sampling Details
- Contaminant Summary Statistics
    - Number of Valid Samples and Percent Valid Data
    - Arithmetic and Geometric Means
    - Max Sampling Results
- Summary of Exceedances of All Applicable Limits (incl. Ontario AAQCs and CAAQS)

The purpose of the Ambient Air Quality Monitoring Program is to quantify the potential air quality effects associated with mining activities. The Program is conducted in accordance with the Site's Amended Environmental Compliance Approval (ECA) No. 0412-A2LR4V, issued on September 24, 2015, and the MECP Program Approval Letter, dated November 9, 2016.

The Program consists of two (2) sampling stations established in May 2015:

- South-west of the Site near McMillan Road along the realigned Highway 600 (Tait Road Station); and
- North-east of the Site along Gallinger Road (Gallinger Road Station).

These sampling stations consist of:

- One (1) High Volume (Hi-Vol) Sampler for discrete sampling of total suspended particulate (TSP) and metals;
- One (1) PQ200 Sampler for discrete sampling of respirable particulate matter ($PM_{2.5}$);
- One (1) passive dustfall collection unit for sampling dustfall; and
- One (1) passive sampling enclosure for sampling nitrogen dioxide (NO_2) and sulphur dioxide (SO_2).

In December 2020, two (2) additional sampling locations were added:

- North-west of the Tailings Management Area (Northwest Station), which includes a Hi-Vol Sampler (TSP and metals) and a PQ200 Sampler ($PM_{2.5}$); and
- Near the Stockpile Pond (SPP1 Station), which includes a passive dustfall collection unit.

In January 2021, a standard passive dustfall collection unit was added at the Northwest Station, allowing the station to monitor dustfall in addition to TSP, metals, and $PM_{2.5}$.

Also in January 2021, four (4) new sampling locations were added in accordance with the Rainy River Mine 2020 Ambient Air Quality Monitoring Program "Monitoring Supplement to Operations" document, dated July 28, 2020. These sampling locations measure passive dustfall at key locations throughout the property. Each station consists of a single passive dustfall collection unit. The stations are located as follows:

- North of the Pit at the South Runoff Pond (NOP1 Station);
- At the West Creek Point (WCP1 Station);
- At the Sedimentation Pond north of the Georgeson House (GH1 Station); and
- At Clark Pond (CP1 Station).

Section 2. MONITORING STATIONS

The ambient air quality monitoring stations were sited in accordance with the criteria stipulated in the Operations Manual (2019).

Universal Transverse Mercator (UTM) co-ordinates for each station based on the NAD83 co-ordinate system are presented in **Table 2-1**. The stations are shown in **Figure 2-1** through **Figure 2-6** below.

Table 2-1. Ambient Air Monitoring Stations

Station	UTM Co-ordinates			Parameters Monitored
	Easting (m)	Northing (m)	Zone	
Tait Road (Southwest Station)	426 072	5 406 996	15	TSP, Metals, $PM_{2.5}$, Dustfall, NO_2, SO_2
Gallinger Road (Northeast Station)	431 133	5 410 534	15	TSP, Metals, $PM_{2.5}$, Dustfall, NO_2, SO_2
Northwest Station (TMA)	419 797	5 413 042	15	TSP, Metals, $PM_{2.5}$, Dustfall
SPP1 Station (Stockpile Pond)	426 937	5 410 799	15	Dustfall
NOP1 Station (South Runoff Pond)	426 297	5 410 537	15	Dustfall
WCP1 Station (West Creek Pond)	425 616	5 411 230	15	Dustfall
GH1 Station (Sedimentation Pond)	423 939	5 411 468	15	Dustfall
CP1 Station (Clark Pond)	429 514	5 409 427	15	Dustfall

2.1 METEOROLOGICAL STATION

Barron Site, located near Heatwole Road, contains a meteorological station that provides real-time wind speed, wind direction, temperature, relative humidity, precipitation, and solar radiation data. All measurements taken at this Site are taken at a height of ten (10) metres above grade.

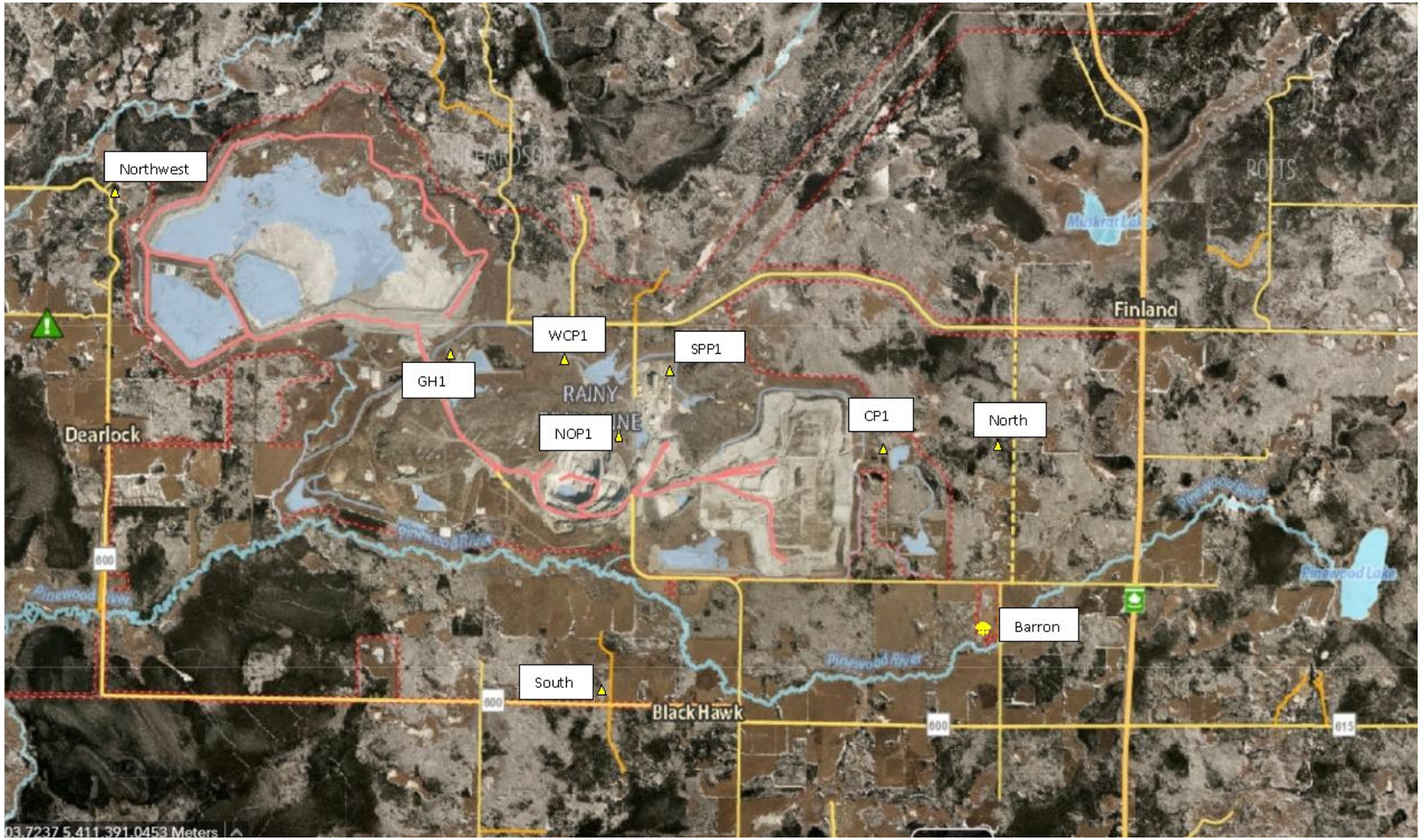

Figure 2-1. Ambient Air Monitoring Station Locations

Figure 2-2. Tait Road Station Siting

Figure 2-3. Gallinger Road Station Siting

Figure 2-4. Tait Road Station Detailed View

Figure 2-5. Northwest Station Siting

Figure 2-6. SPP1 Station Siting

Section 3. Analytical Methods

3.1 Total Suspended Particulate Matter (TSP) and Metals

24-hour average TSP and metal samples were collected as specified in the Operations Manual. Samples were collected every sixth (6th) day, as per the U.S. EPA Sampling Schedule (United States Environmental Protection Agency, 2020).

TSP and metal samples were collected using High Volume (Hi-Vol) Samplers with a brush motor and controlled mass flow. The samples are collected on an 8-inch by 10-inch Hi-Vol quartz filter.

TSP concentrations are determined using the standard gravimetric reference method described in Compendium Method IO-3.1 of the U.S. EPA's "Compendium of Methods for the Determination of Inorganic Compounds in Ambient Air" (1999).

The lowest detectable mass of TSP on the filter is 2,300 micrograms (µg). A valid 24-hour sample volume for the Hi-Vol Sampler ranges between 1,468 and 1,794 cubic metres (m^3). As such, the method detection limit (MDL) for TSP ranges between 1.28 and 1.57 micrograms per cubic metre ($\mu g/m^3$).

Metal concentrations are determined using Inductively Coupled Plasma Atomic Emission Spectroscopy (ICP/AES) based on Compendium Method IO-3.5 (U.S. EPA, 1999). The metals and metalloids (elements with both metallic and non-metallic properties) analyzed include arsenic (As), cadmium (Cd), chromium (Cr), cobalt (Co), copper (Cu), iron (Fe), lead (Pb), manganese (Mn), nickel (Ni), selenium (Se), vanadium (V), and zinc (Zn).

The total volume of each sample is calculated using methods recommended by the sampler manufacturer. These calculations account for ambient temperature and pressure, sampler flow rate, and individual monitor specifications. The calculations are not corrected for humidity.

3.2 Respirable Particulate Matter ($PM_{2.5}$)

Respirable particulate samples are collected at the same time as TSP samples (every sixth day, as per the EPA Sampling Schedule).

Samples are collected using PQ200 Samplers over a 24-hour period to align with the averaging time for the Canadian Ambient Air Quality Standard (CAAQS). The samples are collected on a 47-millimetre (mm) diameter polytetrafluoroethylene (PTFE; Teflon) filter.

$PM_{2.5}$ concentrations are determined using the standard gravimetric reference method outlined in the U.S. EPA's "Quality Assurance Guidance Document 2.12: Monitoring $PM_{2.5}$ in Ambient Air Using Designated Reference or Class I Equivalent Methods" (U.S. EPA, 2016).

The lowest detectable mass of $PM_{2.5}$ on the Teflon filter is 15 micrograms (µg). Based on a valid 24-hour sample volume ranging between 21.6 and 26.4 m^3, the MDL for $PM_{2.5}$ ranges between 0.57 and 0.69 $\mu g/m^3$.

Total sample volume is recorded mechanically by the PQ200 Samplers.

3.3 TOTAL DUSTFALL

Total dustfall deposition samples are collected over a 30-day period using standard plastic dustfall sampler jars with four (4) millimetre (mm) polyethylene liners. The dustfall jars are treated with an algaecide to prevent algal growth during the summer and alcohol to prevent freezing during the winter.

The sample jars measure roughly 15.4-centimetres (cm) in diameter by 30.5 cm in height.

The water soluble and insoluble portions of dustfall are determined by gravimetric analysis using the method described in Section G of British Columbia Ministry of the Environment's "Air Constituents – Inorganic" (British Columbia Ministry of the Environment, 2020).

Metal concentrations within the dustfall samples are determined using Inductively Coupled Plasma-Mass Spectrometry (ICP/MS) in accordance with U.S. EPA's Method 6020A (SW-846) (U.S. EPA, 1998). The metals and metalloids sampled include aluminum (Al), antimony (Sb), arsenic (As), barium (Ba), beryllium (Be), bismuth (Bi), boron (B), cadmium (Cd), calcium (Ca), chromium (Cr), cobalt (Co), copper (Cu), iron (Fe), lead (Pb), lithium (Li), magnesium (Mg), manganese (Mn), molybdenum (Mo), nickel (Ni), phosphorus (P), potassium (K), selenium (Se), silicon (Si), silver (Ag), sodium (Na), strontium (Sr), thallium (Tl), tin (Sn), titanium (Ti), uranium (U), vanadium (V), and zinc (Z).

The analysis method employed for total dustfall has an MDL of 0.3 grams per square metre per 30 days (g/m^2/30 days).

3.4 PASSIVE SAMPLING FOR SO_2 AND NO_2

Sulphur dioxide (SO_2) and nitrogen dioxide (NO_2) concentrations are monitored by passive monitoring devices over a 30-day exposure period. As such, sample uptake depends on temperature, relative humidity, and wind speed. To account for this, analytical results are adjusted based on the monthly averages for these meteorological parameters throughout the exposure period. The required meteorological data are obtained by Maxxam Analytics from the Environment and Climate Change Canada website for the Fort Frances meteorological station (Climate ID 6022474) with each sample submission.

Since there is currently no MECP guidance on 30-day passive sampling of NO_2 or SO_2, sampling is performed using the methodology developed, approved, and validated by Alberta Environment with the support of the Alberta Research Council, the Clean Air Strategic Alliance of Alberta, and the National Research Council of Canada (Bari, Curran, & Kindzierski, 2015).

For both SO_2 and NO_2, the analytical MDL is on the order of 0.1 parts per billion by volume (ppbv). Validation tests conducted in Alberta show that results from passive sampling are typically within ten percent (10%) of those obtained from sampling with continuous analyzers for 30-day exposure periods (2015).

Since there are no MECP guidelines for monthly concentrations of SO_2 or NO_2 obtained from passive sampling, this data is used solely for screening purposes.

For NO_2, the monthly results are compared against Ontario's 24-hour AAQC (200 $\mu g/m^3$) converted to an equivalent 30-day (720-hour) average (78 $\mu g/m^3$) using the methodology outlined

in the MECP's "Guideline A-10: Procedure for Preparing an Emission Summary and Dispersion Modelling Report" (Ontario Ministry of the Environment, Conservation and Parks, 2019).

For SO_2, the monthly results are compared against Alberta's 30-day Ambient Air Quality Objective (AAQO) of 30 µg/m^3 (Alberta Environment and Parks, 2019).

Section 4. MONITORING METHODS

4.1 HI-VOL AND PQ200 SAMPLERS

Stations are visited every six days to take samples for TSP, metals, and $PM_{2.5}$. The exposed filter is recovered, and a pre-weighed filter is installed for the subsequent sample run.

Additional visits are made to the stations, as required, to resolve instrumentation issues, perform flow calibration checks, and preventative/proactive maintenance. All calibrations are performed in accordance with manufacturer specifications.

Flow calibrations are performed at least once per quarter by New Gold staff on the Hi-Vol TE-5170 Samplers using a Tisch Delta Calibration kit. The flow is calibrated to a flow rate of 1,133 litres per minute (LPM), which produces a sample volume of 1,632 m^3 in a 24-hour period.

Flow, temperature, and pressure calibrations are performed at least once per quarter by New Gold staff on the PQ200 Samplers using an electronic BGI Flow Calibrator. The flow is calibrated to a flow rate of 16.7 LPM, which produces a sample volume of 24 m^3 in a 24-hour period.

In this quarter, calibrations were performed on the Hi-Vol and PQ200 Samplers on March 8th and March 16th, respectively. Calibration sheets for the samplers can be found in **Appendix D**.

4.2 DUSTFALL SAMPLERS

The dustfall samplers containing algaecide are changed monthly to correspond with the 30-day exposure period.

Dustfall jars are provided by the laboratory with screw-on lids to prevent sample loss during transport.

4.3 PASSIVE SAMPLERS

The permeation filters in the passive samplers are also changed monthly to correspond with the 30-day exposure period.

Filters are kept in cassettes inside Ziploc bags until deployment to prevent premature exposure. After the sample is collected, the filter is placed back into the cassette and back into the Ziploc bag for shipment to the lab.

Section 5. Sampling Issues

5.1 Performance and Site Audits

There were no MECP audits conducted in Q1 2021.

5.2 Equipment and Sampling Issues

There were five (5) samples invalidated in this quarter, as described below and in **Appendix E**.

- The $PM_{2.5}$ sample taken at the Northwest Station on January 4, 2021 was considered invalid because the sampler did not record any volume for the sample (i.e., sample volume was recorded as 0 m^3).
- The $PM_{2.5}$ sample taken at the Tait Road Station on January 10, 2021 was considered invalid because the sample volume (38 m^3) exceeded the maximum allowable sample volume (26.4 m^3).
- The TSP sample taken at the Northwest Station on March 23, 2021 was considered invalid because the sample volume (1,897 m^3) exceeded the maximum allowable sample volume (1,794 m^3).
- The TSP sample taken at the Tait Road Station on March 29, 2021 was considered invalid because the sample volume (1,411 m^3) was below the minimum allowable sample volume (1,468 m^3).
- The $PM_{2.5}$ sample taken at the Northwest Station on March 29, 2021 was considered invalid because the sampler did not run during the sampling period. The cause is being investigated with assistance from the sampler manufacturer.

Section 6. SAMPLING RESULTS

Sampling results for Q1 are presented in **Section 6.1** and **Appendix A-1** for TSP and metals, **Section 6.2** and **Appendix A-1** for $PM_{2.5}$, **Section 6.3** and **Appendices A-2** and **A-3** for total dustfall, and **Section 6.4** and **Appendix A-4** for passive SO_2 and NO_2.

In performing statistical analyses, as per the Operations Manual, a value of half the method detection limit is substituted for concentrations that are reported below the method detection limit. Laboratory Certificates of Analysis for all samples collected in Q1 are provided in **Appendix C**.

For comparative purposes, the Ontario AAQC and Canadian AAQS values are presented, where available. It is important to note that the Ontario AAQCs are equivalent to the standards prescribed by *Ontario Regulation 419/05: Air Pollution – Local Air Quality* (Government of Ontario, 2019).

Q1 presented fifteen (15) possible sampling days between January 1, 2021 and March 31, 2021 for the 6-day sampling schedule. Summaries of the analyses for TSP, metals, and $PM_{2.5}$ are presented in **Table 6-1, Table 6-2,** and **Table 6-3**, respectively.

Summaries of the analyses for total dustfall (incl. metals) and passive SO_2 and NO_2 are presented in **Table 6-4**, **Table 6-5**, **Table 6-6**, and **Table 6-7**.

6.1 TSP AND METALS

In this quarter, the Gallinger Road Station collected fifteen (15) valid samples (100% valid data), while the Tait Road and Northwest Stations collected fourteen (14) valid samples (93% valid). Since all stations are above the 90% threshold, statistical analyses for TSP and metals are computed using only valid data.

For this quarter, the arithmetic mean TSP concentrations were 23.08 µg/m^3, 25.59 µg/m^3, and 25.42 µg/m^3 for the Tait Road, Gallinger Road, and Northwest Stations, respectively. Geometric means for the three stations were 13.23 µg/m^3, 18.16 µg/m^3, and 11.92 µg/m^3, respectively.

The maximum 24-hour concentration for TSP was 106.62 µg/m^3 at the Tait Road Station on February 27, 2021, 97.90 µg/m^3 at the Gallinger Road Station on February 9, 2021, and 178.93 µg/m^3 at the Northwest Station on January 28, 2021.

Laboratory data are provided as the mass of contaminant on the filter, in micrograms. This is divided by the total sample volume measured by the Hi-Vol Sampler to determine the concentration of the contaminant in the sample using the following equation:

$$Concentration\ (\mu g/m^3) = \frac{Laboratory\ Measured\ Mass\ (\mu g)}{Sample\ Volume\ (m^3)}$$

In this quarter, there was one (1) sample that exceeded the TSP AAQC (120 µg/m^3) on January 28, 2021 at the Northwest Station with a concentration of 178.93 µg/m^3.

Data is summarized for TSP and metals in **Table 6-1** and **Table 6-2**. Sample data from all runs and further statistical analyses are presented in **Appendix A-1**, **Figure 6-1**, and **Figure 6-2.**

Table 6-1. TSP Summary Statistics. Concentrations presented in µg/m³.

	Tait Road Station	Gallinger Road Station	Northwest Station
Number of Valid Samples	14	15	14
% Valid Data	93%	100%	93%
Arithmetic Mean	23.08	25.59	25.42
Geometric Mean	13.23	18.16	11.92
Jan Maximum	14.07	18.95	178.93
Feb Maximum	106.62	97.90	20.93
Mar Maximum	38.65	60.26	56.24
24-Hour Maximum	106.62	97.90	178.93
90th Percentile	52.73	54.91	45.65
95th Percentile	75.51	71.56	99.18
TSP AAQC	120	120	120
Samples > TSP AAQC	0	0	1
Samples > Metal AAQC	0	0	0

Table 6-2. Maximum Concentrations of Metals. Concentrations presented in µg/m³.

Metal	24-Hour AAQC	Tait Road Station		Gallinger Road Station		Northwest Station	
		Maximum Concentration	Fraction of AAQC	Maximum Concentration	Fraction of AAQC	Maximum Concentration	Fraction of AAQC
As	0.3	1.01×10^{-3}	0.34%	2.71×10^{-3}	0.90%	4.39×10^{-3}	1.46%
Cd	0.025	6.73×10^{-4}	2.69%	6.81×10^{-4}	2.72%	6.75×10^{-4}	2.70%
Cr	0.5	7.13×10^{-3}	1.43%	5.64×10^{-3}	1.13%	5.57×10^{-3}	1.11%
Co	0.1	1.73×10^{-3}	1.73%	6.81×10^{-4}	0.68%	1.34×10^{-3}	1.34%
Cu	50	6.70×10^{-2}	0.13%	1.35×10^{-1}	0.27%	2.47×10^{-1}	0.49%
Fe	4	2.99	74.80%	1.29	32.14%	2.21	55.26%
Pb	0.5	6.13×10^{-3}	1.23%	1.75×10^{-2}	3.50%	4.79×10^{-2}	9.58%
Mn	0.4	9.73×10^{-2}	24.32%	6.66×10^{-2}	16.66%	1.48×10^{-1}	36.98%
Ni	0.2	4.73×10^{-3}	2.37%	2.97×10^{-3}	1.49%	3.78×10^{-3}	1.89%
Se	10	3.37×10^{-3}	0.03%	3.41×10^{-3}	0.03%	3.37×10^{-3}	0.03%
V	2	5.40×10^{-3}	0.27%	1.70×10^{-3}	0.09%	3.84×10^{-3}	0.19%
Zn	120	4.86×10^{-2}	0.04%	1.44×10^{-1}	0.12%	1.29×10^{-1}	0.11%

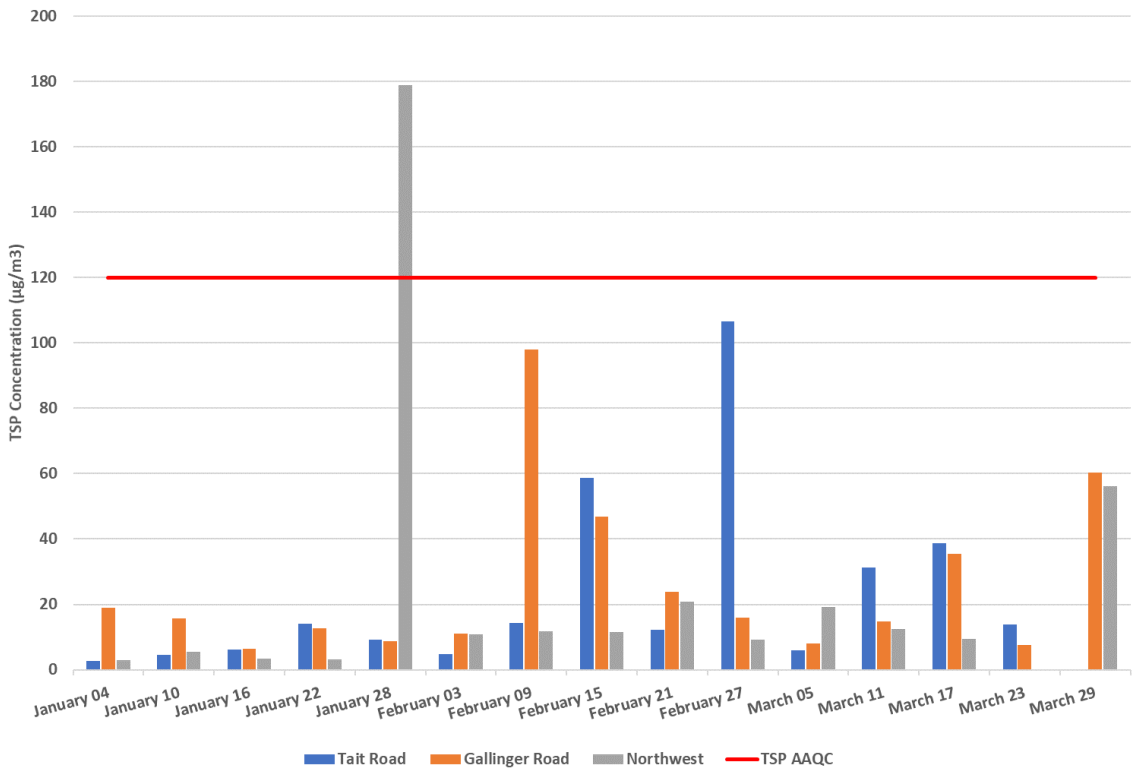

Figure 6-1. TSP Sampling Results

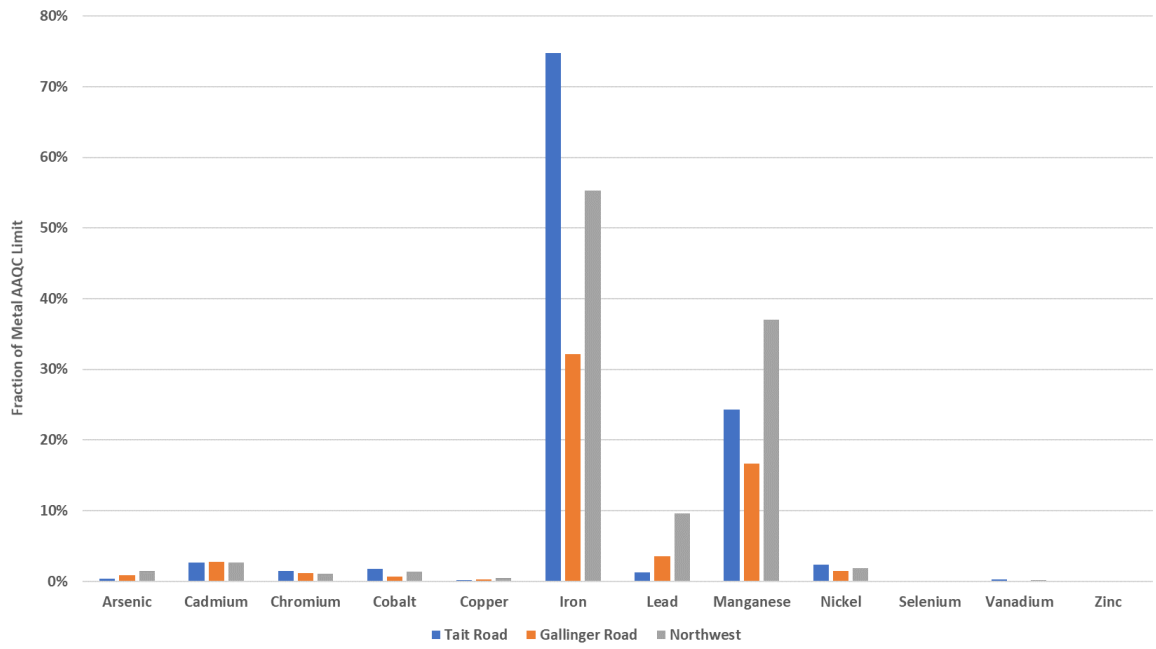

Figure 6-2. Max Metal Sampling Result as a Fraction of Metal AAQC

6.2 $PM_{2.5}$

In this quarter, the Gallinger Road Station collected fifteen (15) valid samples (100% valid data), the Tait Road Station collected fourteen (14) valid samples (93% valid data), and the Northwest Station collected thirteen (13) valid samples (87% valid data). Statistical analyses for respirable particulate matter for the Tait Road and Gallinger Road Stations are computed using only valid data since they are above the 90% valid data threshold. While the Northwest Station is below the 90% valid data threshold, the two invalid samples are due to the sampler not running during the sampling period. As such, the statistical analysis is based on data from the runs that occurred.

For this quarter, the arithmetic mean $PM_{2.5}$ concentrations were 4.46 µg/m^3, 4.21 µg/m^3, and 4.60 µg/m^3 for the Tait Road, Gallinger Road, and Northwest Stations, respectively.

The maximum 24-hour concentrations for $PM_{2.5}$ were 18.19 µg/m^3 at the Tait Road Station, 18.52 µg/m^3 at the Gallinger Road Station, and 14.64 µg/m^3 at the Northwest Station. All these results occurred on February 21, 2021.

Laboratory data is provided as the mass of $PM_{2.5}$ on the filter, in micrograms. This value is divided by the total sample volume measured by the PQ200 Sampler to determine the concentration of $PM_{2.5}$ in the sample using the following equation:

$$Concentration\ (\mu g/m^3) = \frac{Laboratory\ Measured\ Mass\ (\mu g)}{Sample\ Volume\ (m^3)}$$

In this quarter, there was no samples that exceeded the $PM_{2.5}$ AAQC or CAAQS (27 µg/m^3).

Data is summarized for $PM_{2.5}$ in **Table 6-3**. Sample data from all runs and further statistical analyses are presented in **Appendix A-1** and **Figure 6-3**.

Table 6-3. $PM_{2.5}$ Summary Statistics. Concentrations presented in µg/m³.

	Tait Road Station	Gallinger Road Station	Northwest Station
Number of Valid Samples	14	15	13
% Valid Data	93%	100%	93%
Arithmetic Mean	4.46	4.21	4.60
Jan Maximum	2.25	6.16	5.28
Feb Maximum	18.19	18.52	14.64
Mar Maximum	4.58	4.08	4.57
24-Hour Maximum	18.19	18.52	14.64
90th Percentile	9.46	8.16	8.18
95th Percentile	13.03	11.56	11.19
$PM_{2.5}$ AAQC	27	27	27
Samples > $PM_{2.5}$ AAQC	0	0	0
MDL (µg)	15	15	15
Samples < MDL	1	2	1

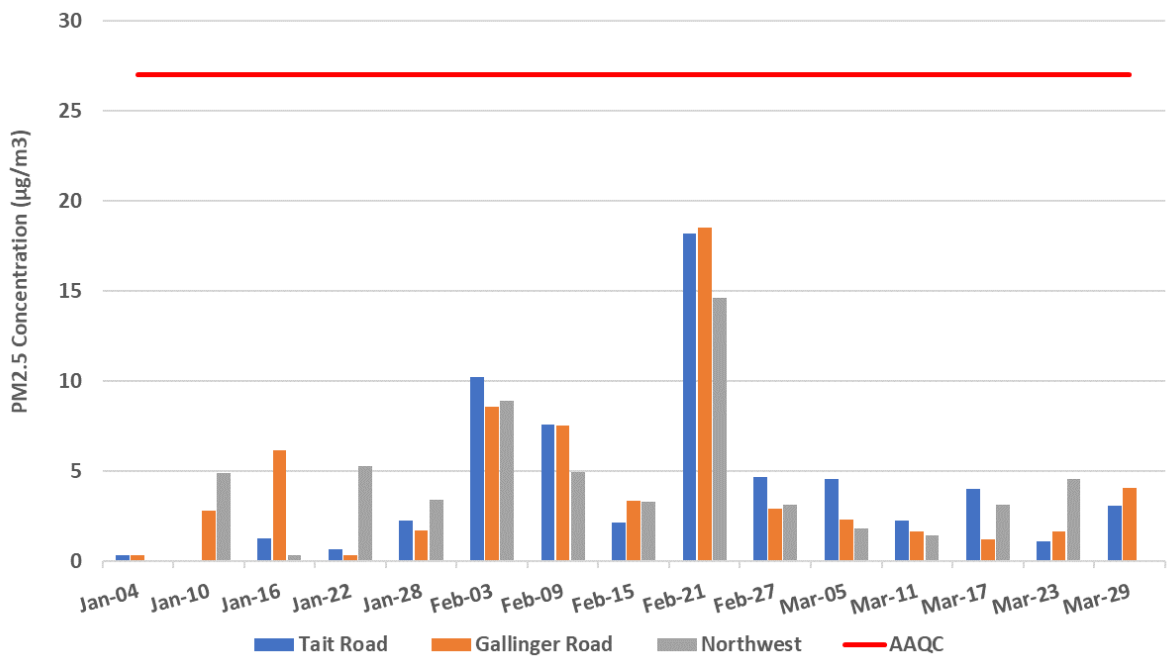

Figure 6-3. $PM_{2.5}$ Sampling Results

6.3 TOTAL DUSTFALL

The Tait Road, Gallinger Road, NOP1, WCP1, and GH1 Stations collected three (3) valid samples (100% valid data) in Q1. The Northwest and CP1 Stations, which were installed in January 2021, collected two (2) valid samples (100% valid data). Sampling at the SPP1 Station occurs on a weekly basis and there were thirteen (13) valid samples collected (100% valid data).

Laboratory data is provided as the mass of total dustfall on the filter per square decimeter per day, in milligrams per decimeter square per day. This value is then converted to the appropriate units for reporting using the equation seen below:

$$Concentration\left(\frac{g}{m^2 \cdot 30\ days}\right) = Lab\ Concentration\left(\frac{mg}{dm^2 \cdot day}\right) \times \frac{1\ g}{1000\ mg} \times \frac{100\ dm^2}{1\ m^2} \times \frac{30\ days}{30\ days}$$

In this quarter, there were no samples that exceeded the total dustfall 30-day Ontario AAQC (7 $g/m^2/30$ days). Note that only the Tait Road, Gallinger Road, and Northwest Stations are considered POI receptors, so measurements above the AAQC at the other stations are not considered exceedances.

Data is summarized for total dustfall in **Table 6-4**. Sample data from all runs and further statistical analyses are presented in **Appendix A-2**. Data is presented in **Table 6-5** and **Appendix A-3** for the metal concentrations measured in the dustfall at stations where metal samples are not taken by the Hi-Vol Sampler (i.e., SPP1, NOP1, WCP1, GH1, and CP1).

Table 6-6 compares the SPP1 dustfall concentrations against the stockpile elevation and weather conditions.

Table 6-4. Total Dustfall Summary Statistics. Concentrations presented in g/m²/30 days.

	Tait Road Station	Gallinger Road Station	Northwest Station	SPP1 Station	NOP1 Station	WCP1 Station	GH1 Station	CP1 Station
Number of Valid Samples	3	3	2	13	3	3	3	2
% Valid Data	100%	100%	100%	100%	100%	100%	100%	100%
Arithmetic Mean	1.89	2.17	1.02	24.41	23.22	4.01	4.82	2.97
Monthly Maximum	3.57	3.24	1.86	84.30	30.60	9.54	6.36	3.72
Samples > Dustfall AAQC	0	0	0	10	3	1	0	0
Samples < MDL	1	0	1	0	0	0	0	0

Table 6-5: Maximum Monthly Concentrations for Dustfall Metals. Concentrations presented in g/m²/30 days.

Metal	SPP1 Station	NOP1 Station	WCP1 Station	GH1 Station	CP1 Station
Aluminum	$4.98x10^{-1}$	$5.34x10^{-1}$	$7.62x10^{-2}$	$1.48x10^{-1}$	$5.64x10^{-2}$
Antimony	$3.33x10^{-4}$	$4.59x10^{-5}$	$9.30x10^{-6}$	$1.14x10^{-5}$	$8.70x10^{-6}$
Arsenic	$2.70x10^{-3}$	$6.66x10^{-4}$	$5.16x10^{-5}$	$6.60x10^{-5}$	$4.20x10^{-5}$
Barium	$5.19x10^{-3}$	$1.95x10^{-3}$	$3.63x10^{-4}$	$6.75x10^{-4}$	$3.18x10^{-4}$
Beryllium	$7.35x10^{-5}$	$1.17x10^{-5}$	$2.25x10^{-5}$	$1.35x10^{-5}$	$1.07x10^{-5}$
Bismuth	$1.35x10^{-4}$	$1.17x10^{-5}$	$2.25x10^{-5}$	$1.35x10^{-5}$	$1.07x10^{-5}$
Boron	$1.47x10^{-3}$	$2.40x10^{-4}$	$4.65x10^{-4}$	$2.70x10^{-4}$	$2.10x10^{-4}$
Cadmium	$8.43x10^{-4}$	$7.80x10^{-5}$	$1.14x10^{-5}$	$7.38x10^{-6}$	$1.42x10^{-5}$
Calcium	1.31	1.26	$1.31x10^{-1}$	$4.32x10^{-1}$	$1.18x10^{-1}$
Chromium	$7.65x10^{-4}$	$8.28x10^{-4}$	$7.62x10^{-5}$	$1.92x10^{-4}$	$8.28x10^{-5}$
Cobalt	$2.46x10^{-4}$	$3.00x10^{-4}$	$1.80x10^{-5}$	$7.53x10^{-5}$	$2.28x10^{-5}$
Copper	$4.38x10^{-3}$	$1.43x10^{-3}$	$2.93x10^{-4}$	$3.81x10^{-4}$	$6.75x10^{-4}$
Iron	$6.66x10^{-1}$	$7.35x10^{-1}$	$5.64x10^{-2}$	$1.92x10^{-1}$	$5.76x10^{-2}$
Lead	$1.29x10^{-2}$	$2.68x10^{-3}$	$2.54x10^{-4}$	$3.63x10^{-4}$	$4.32x10^{-4}$
Lithium	$7.35x10^{-4}$	$1.26x10^{-3}$	$2.25x10^{-4}$	$3.30x10^{-4}$	$1.07x10^{-4}$
Magnesium	$3.90x10^{-1}$	$3.03x10^{-1}$	$3.03x10^{-2}$	$8.01x10^{-2}$	$2.56x10^{-2}$
Manganese	$5.73x10^{-2}$	$2.62x10^{-2}$	$3.21x10^{-3}$	$6.93x10^{-3}$	$3.03x10^{-3}$
Molybdenum	$4.32x10^{-5}$	$5.40x10^{-5}$	$6.33x10^{-6}$	$1.27x10^{-5}$	$2.37x10^{-5}$
Nickel	$7.14x10^{-4}$	$6.93x10^{-4}$	$5.16x10^{-5}$	$1.91x10^{-4}$	$6.45x10^{-5}$
Phosphorus	$2.64x10^{-2}$	$1.40x10^{-2}$	$2.25x10^{-3}$	$2.61x10^{-3}$	$1.07x10^{-3}$
Potassium	$2.88x10^{-1}$	$9.48x10^{-2}$	$2.50x10^{-2}$	$3.09x10^{-2}$	$1.78x10^{-2}$
Selenium	$1.47x10^{-4}$	$2.40x10^{-5}$	$4.65x10^{-5}$	$2.70x10^{-5}$	$2.10x10^{-5}$
Silicon	$8.19x10^{-1}$	$7.11x10^{-1}$	$1.14x10^{-1}$	$2.03x10^{-1}$	$8.07x10^{-2}$
Silver	$2.00x10^{-4}$	$3.90x10^{-5}$	$6.12x10^{-6}$	$5.34x10^{-6}$	$4.59x10^{-6}$
Sodium	$3.54x10^{-2}$	$5.13x10^{-2}$	$9.12x10^{-3}$	$1.78x10^{-2}$	$7.11x10^{-3}$
Strontium	$4.11x10^{-3}$	$1.99x10^{-3}$	$3.36x10^{-4}$	$6.33x10^{-4}$	$2.45x10^{-4}$
Thallium	$1.47x10^{-5}$	$2.40x10^{-6}$	$4.65x10^{-6}$	$2.70x10^{-6}$	$2.10x10^{-6}$
Tin	$1.47x10^{-5}$	$6.45x10^{-6}$	$4.65x10^{-6}$	$4.80x10^{-6}$	$2.10x10^{-6}$
Titanium	$1.32x10^{-2}$	$9.39x10^{-3}$	$1.23x10^{-3}$	$2.34x10^{-3}$	$1.08x10^{-3}$

Metal	SPP1 Station	NOP1 Station	WCP1 Station	GH1 Station	CP1 Station
Uranium	$2.21x10^{-5}$	$6.75x10^{-6}$	$1.25x10^{-6}$	$2.10x10^{-6}$	$1.02x10^{-6}$
Vanadium	$9.93x10^{-4}$	$1.32x10^{-3}$	$1.20x10^{-4}$	$3.48x10^{-4}$	$1.05x10^{-4}$
Zinc	$2.06x10^{-1}$	$1.96x10^{-2}$	$2.78x10^{-3}$	$2.08x10^{-3}$	$4.29x10^{-3}$

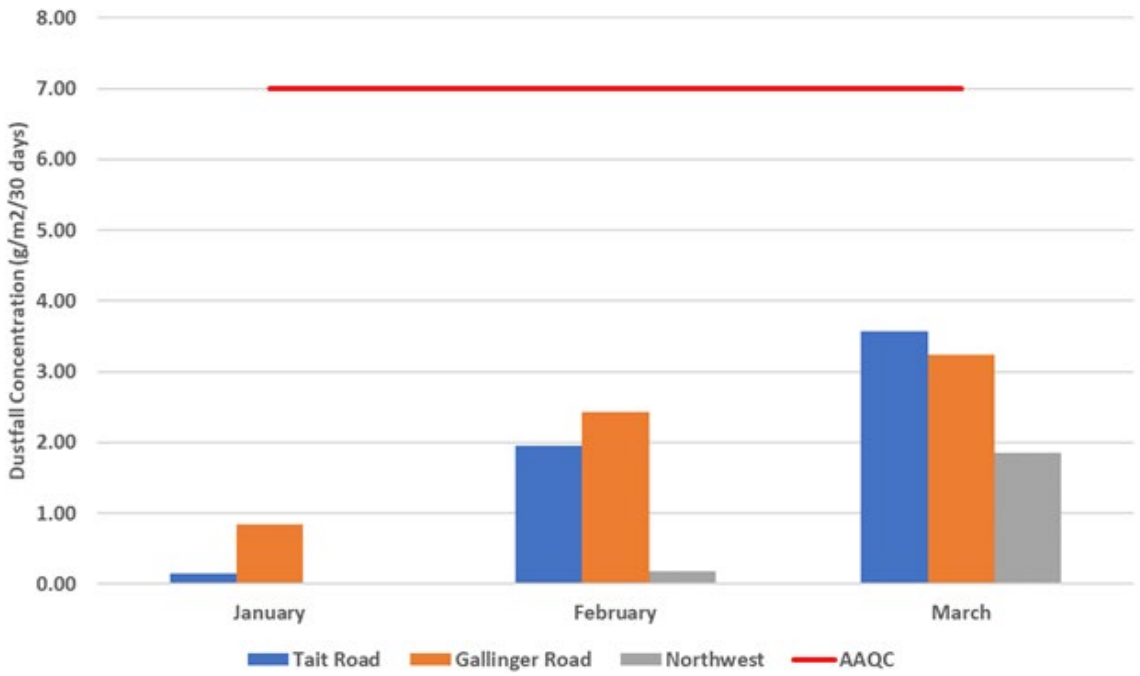

Figure 6-4. Dustfall Sampling Results at POI Stations

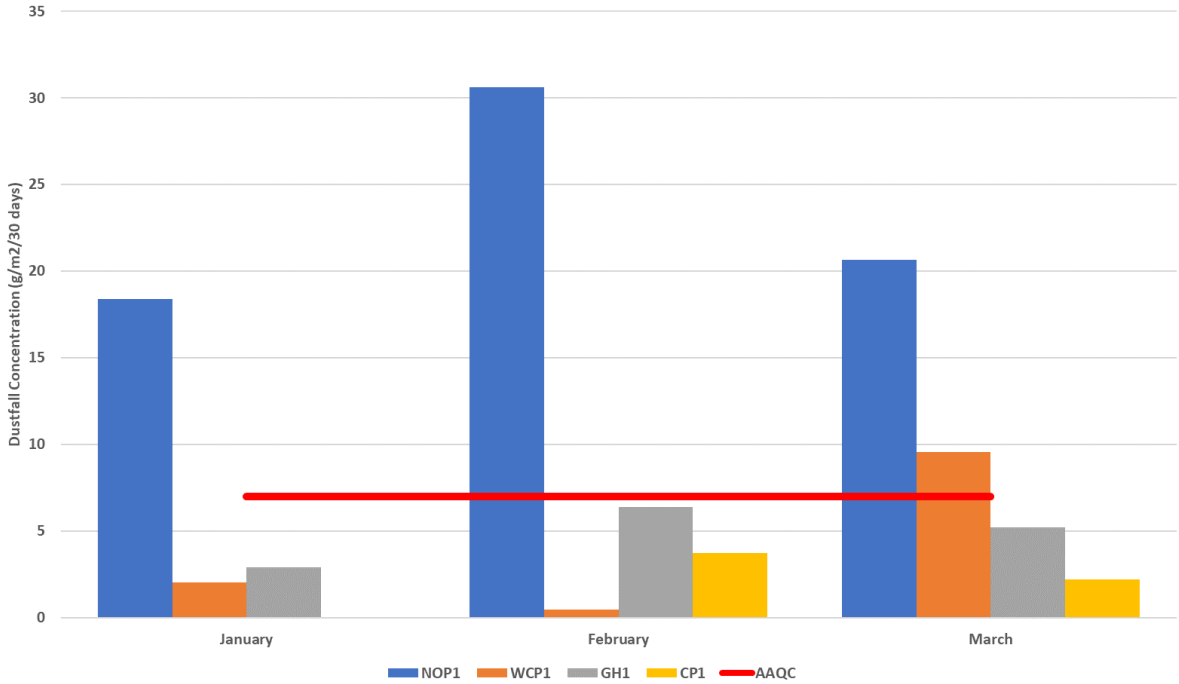

Figure 6-5. Dustfall Sampling Results at On-Site Stations

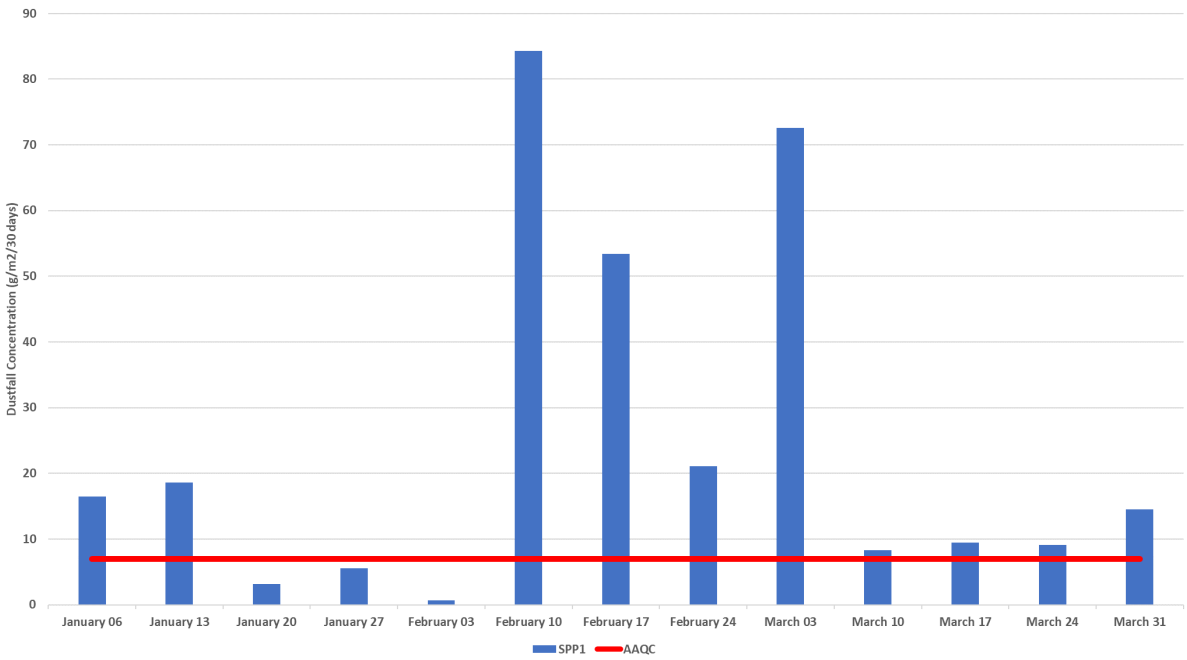

Figure 6-6. Dustfall Sampling Results at SPP1 Station

Table 6-6: SPP1 Dustfall Samples versus Stockpile Size and Weather Data

Start Date	Stop Date	Stockpile Size (%)	Precipitation (mm)	Avg. Wind Speed (km/hr)	Avg. Wind Direction	Total Dustfall ($g/m^2/30$ days)
Dec 30	Jan 6	85.80%	0.2	9.76	SSE	16.50
Jan 6	Jan 13	72.20%	0.2	9.52	ESE	18.63
Jan 13	Jan 20	74.90%	11.4	N/A	N/A	3.15
Jan 20	Jan 27	76.80%	5.2	2.4	NE	5.52
Jan 27	Feb 3	75.80%	5.8	13.54	ESE	0.72
Feb 3	Feb 10	68.80%	4.6	11.4	WNW	84.30
Feb 10	Feb 17	82.10%	0.6	2.17	NE	53.40
Feb 17	Feb 24	90.00%	1	6.52	S	21.06
Feb 24	Mar 3	90.90%	2	7.07	WNW	72.60
Mar 3	Mar 10	91.90%	0	5.98	ENE	8.34
Mar 10	Mar 17	91.80%	0	4.56	NW	9.45
Mar 17	Mar 24	92.00%	1.6	7.07	S	9.15
Mar 24	Mar 31	90.00%	4	3.26	SSE	14.52

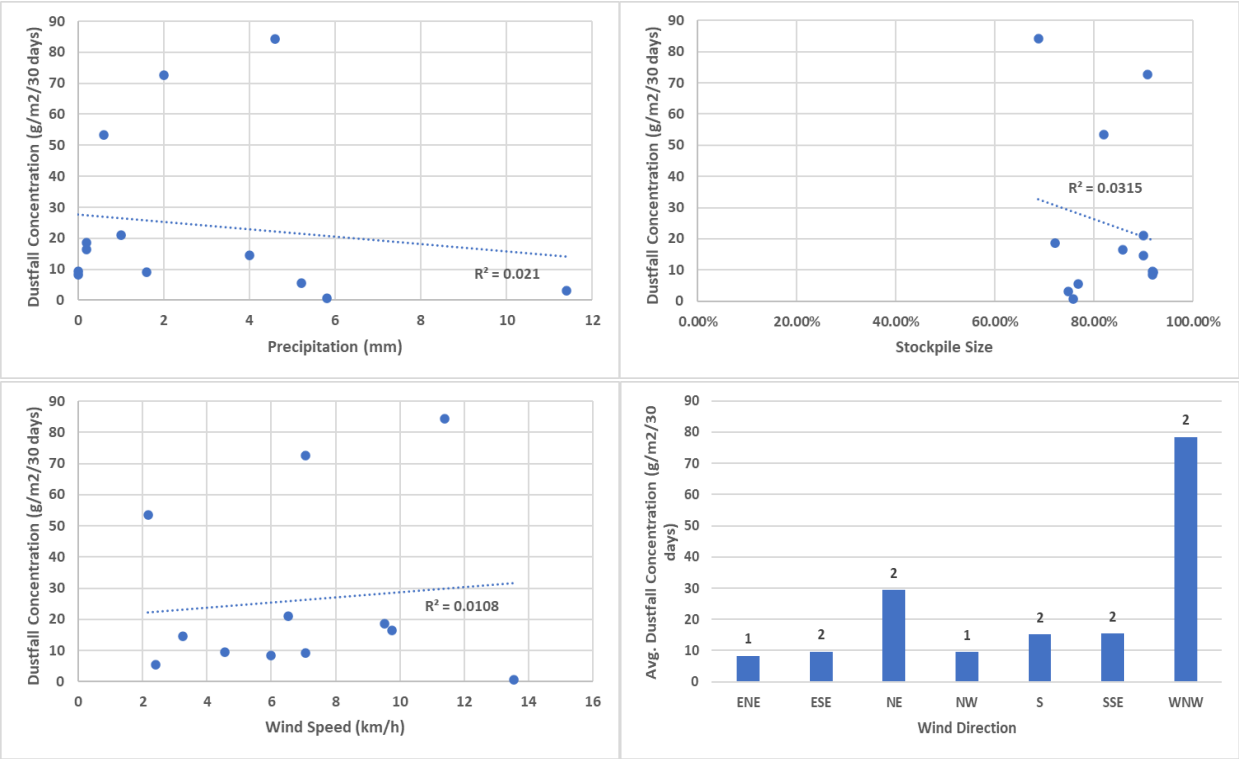

Figure 6-7. SPP1 Dustfall Concentrations vs. Stockpile Size and Weather Data. *Note that the values displayed above the bars in the fourth figure represent the number of data points that make up the average.*

6.4 PASSIVE SO_2 AND NO_2

The Tait Road and Gallinger Road Stations collected three (3) valid samples out of a possible three (3) sampling opportunities (100% valid data) in this quarter.

There are no MECP standards, guidelines, or Ontario AAQCs for SO_2 or NO_2 for a 30-day averaging period. Instead, the 30-day measured average SO_2 or NO_2 concentrations allow for future analysis of trends in the ambient concentrations, identification of notable increases, and comparison with dispersion modelling results.

For NO_2, the monthly results are compared against Ontario's 24-hour NO_2 AAQC (200 µg/m^3) converted to an equivalent 30-day average (78 µg/m^3) using the methodology outlined in the MECP's "Guideline A-10: Procedure for Preparing an Emission Summary and Dispersion Modelling Report" (2019).

For SO_2, the monthly results are compared against Alberta's 30-day SO_2 Ambient Air Quality Objective (AAQO) of 30 µg/m^3 (Alberta Environment and Parks, 2019).

For this quarter, the arithmetic mean SO_2 concentrations were 0.52 µg/m^3 at the Tait Road Station and 0.70 µg/m^3 at the Gallinger Road Station. The arithmetic mean NO_2 concentrations were 1.76 µg/m^3 and 1.38 µg/m^3 at the Tait Road and Gallinger Road Stations, respectively.

The maximum monthly concentration of SO_2 was 0.52 µg/m^3 at the Tait Road Station (in all three months) and 1.05 µg/m^3 at the Gallinger Road Station in March. The maximum monthly concentration of NO_2 was 3.76 µg/m^3 at the Tait Road Station and 2.82 µg/m^3 at the Gallinger Road Station (both in January).

Laboratory data is provided as the concentration of the contaminant in the sample, in parts per billion by volume. This value is then converted to the appropriate units for reporting using the equation seen below:

$$Concentration\ (\mu g/m^3) = Lab\ Concentration\ (ppbv) \times \frac{Molecular\ Weight}{Molar\ Volume}$$

In this quarter, there were no samples that exceeded the converted 24-hour NO_2 Ontario AAQC (78 µg/m^3), and no samples that exceeded the 30-day Alberta SO_2 AAQO (30 µg/m^3).

Data is summarized for SO_2 and NO_2 in **Table 6-7**. Sample data from all runs and further statistical analyses are presented in **Appendix A-4** and **Figure 6-8**.

Table 6-7: Summary Statistics for SO_2 and NO_2. Concentrations presented in µg/m^3.

	Tait Road Station		Gallinger Road Station	
	SO_2	**NO_2**	**SO_2**	**NO_2**
Number of Valid Samples	3	3	3	3
% Valid Data	100%	100%	100%	100%
Arithmetic Mean	0.52	1.76	0.70	1.38
Monthly Maximum	0.52	3.76	1.05	2.82
Limit	30	78	30	78
Samples > Limit	0	0	0	0
MDL	0.26	0.19	0.26	0.19
Samples < MDL	0	0	0	0

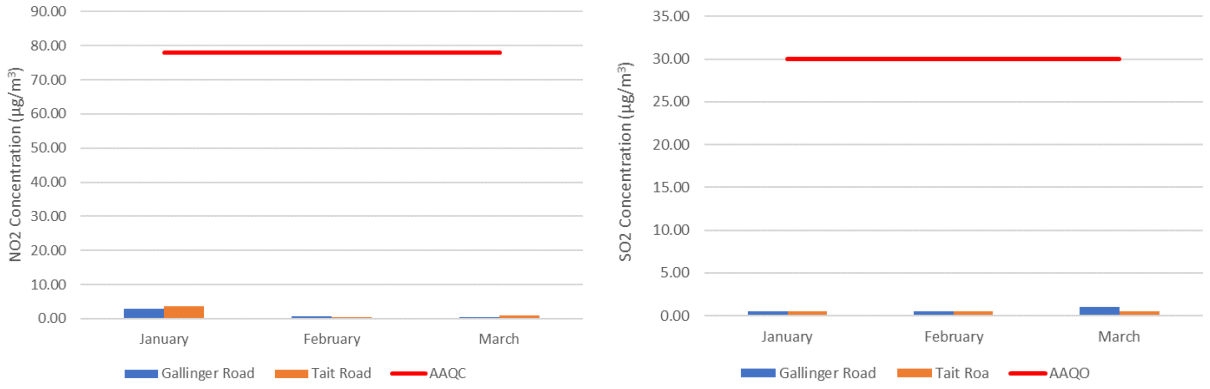

Figure 6-8. NO_2 and SO_2 Sampling Results

Section 7. MITIGATION MEASURES

A series of mitigation steps were taken in Q2 of 2020 to remedy issues with variable flow rates through the Hi-Vol TSP Samplers leading to invalid samples. In Q1 of 2021, there were only two (2) invalid TSP samples. As such, these measures appear to have been effective at addressing the issue.

In Q4 of 2020, all three samples of total dustfall taken at the SPP1 Station were in exceedance of the AAQC. Similarly, in Q1 of 2021, ten (10) of the thirteen (13) samples were in exceedance. However, since this Station is located within the property boundary and not considered a point of impingement, no mitigation measures have been implemented at this time.

Section 8. CONCLUSION

The Rainy River Mine Ambient Air Quality Monitoring Program was conducted in the first quarter of 2021 in accordance with the Site's Amended Environmental Compliance Approval (ECA) Number 0412-A2LR4V and the MECP Program Approval Letter.

Samples were taken every sixth (6th) day for total suspended particulate matter (TSP), metals, and respirable particulate matter ($PM_{2.5}$). Samples were taken monthly for total dustfall, sulphur dioxide (SO_2), and nitrogen dioxide (NO_2).

These samples were sent out for analysis in accordance with the methods prescribed in the Operations Manual.

There was one (1) exceedances of the TSP limit at the Northwest Station on January 28, 2021.

There were no exceedances of the metal, $PM_{2.5}$, total dustfall, NO_2, or SO_2 limits.

Section 9. REFERENCES

Alberta Environment and Parks. (2019, January). *Alberta Ambient Air Quality Objectives and Guidelines Summary.* Retrieved from Ambient Air Quality Objectives: https://open.alberta.ca/dataset/0d2ad470-117e-410f-ba4f-aa352cb02d4d/resource/4ddd8097-6787-43f3-bb4a-908e20f5e8f1/download/aaqo-summary-jan2019.pdf

American Society for Testing and Materials International. (2017). *ASTM D1739-98(2017), Standard Test Method for Collection and Measurement of Dustfall (Settleable Particulate Matter).* Retrieved from Standards Products: https://www.astm.org/Standards/D1739.htm

Bari, M., Curran, R. T., & Kindzierski, W. B. (2015). Field performance evaluation of Maxxam passive samplers for regional monitoring of ambient SO2, NO2 and O3 concentrations in Alberta, Canada. *Atmospheric Environment, 114*, 39-47.

British Columbia Ministry of the Environment. (2020). *Section G: Air Constituents - Inorganic.* Retrieved from B.C. Environmental Laboratory Manual: https://www2.gov.bc.ca/assets/gov/environment/research-monitoring-and-reporting/monitoring/emre/lab-manual/section-g-2020.pdf

Government of Ontario. (2019, January 1). *O. Reg. 419/05: Air Pollution - Local Air Quality*. Retrieved from Ontario Laws: https://www.ontario.ca/laws/regulation/050419

Ontario Ministry of the Environment, Conservation and Parks. (2019, May 14). *Operations manual for air quality monitoring in Ontario*. Retrieved from Ontario.ca: https://www.ontario.ca/document/operations-manual-air-quality-monitoring-ontario-0

Ontario Ministry of the Environment, Conservation and Parks. (2019, May 1). *Procedure for Preparing an Emission Summary and Dispersion Modelling Report.* Retrieved from Guideline A-10: https://files.ontario.ca/books/20180309_moecc_65_emission_aoda_en-aoda.pdf

Ontario Ministry of the Environment, Conservation and Parks. (2020, May 1). *Ambient Air Quality Criteria.* Retrieved from Ontario's Ambient Air Quality Criteria: https://files.ontario.ca/mecp-ambient-air-quality-criteria-list-en-2020-05-01.pdf

U.S. EPA. (1998, January). *Method 6020A: Inductively Coupled Plasma - Mass Spectrometry.* Retrieved from U.S. Environmental Protection Agency: https://19january2017snapshot.epa.gov/sites/production/files/2015-07/documents/epa-6020a.pdf

U.S. EPA. (1999, June). *Compendium of Methods for the Determination of Inorganic Compounds in Ambient Air: Compendium Method IO-3.1.* Retrieved from U.S. Environmental Protection Agency: https://www.epa.gov/sites/production/files/2015-07/documents/epa-io-3.1.pdf

U.S. EPA. (1999, June). *Compendium of Methods for the Determination of Inorganic Compounds in Ambient Air: Compendium Method IO-3.5.* Retrieved from U.S. Environmental

Protection Agency: https://www.epa.gov/sites/production/files/2015-07/documents/epa-io-3.5.pdf

U.S. EPA. (2016, January). *Quality Assurance Guidance Document 2.12: Monitoring PM2.5 in Ambient Air Using Designated Reference or Class I Equivalent Methods.* Retrieved from U.S. Environmental Protection Agency: https://www3.epa.gov/ttnamti1/files/ambient/pm25/qa/m212.pdf

United States Environmental Protection Agency. (2020, November). *2021 EPA Sampling Schedule.* Retrieved from Sampling Schedule Calendar: https://www.epa.gov/sites/production/files/2020-11/documents/2021_sampling_schedule.pdf

Section 10. CLOSING

The *Rainy River Mine Ambient Air Quality Monitoring Program First Quarter 2021 Report* was prepared by New Gold Inc. The quality of information, conclusions, and estimates contained herein are based on:

- Information available at the time of preparation;
- Data supplied by outside sources; and
- The assumptions, conditions, and qualifications set forth in this document.

If you require further information regarding the above, or the Mine in general, please contact the undersigned at 1(807) 234-8170.

Sincerely,

New Gold Inc.

Rainy River Mine

Prepared By:

Garnet Cornell

Environment Superintendent

APPENDIX A:
SAMPLING RESULTS

Appendix A-1 TSP, Metals, and $PM_{2.5}$ Sampling Results

Appendix A-2 Total Dustfall Sampling Results

Appendix A-3 Dustfall Metals Sampling Results

Appendix A-4 SO_2 and NO_2 Passive Sampling Results

APPENDIX A-1:

TSP, METALS, AND $PM_{2.5}$ SAMPLING RESULTS

newgold Rainy River

Tait Road Station Monitoring Results
(concentrations expressed in µg/m^3)

Date	TSP	As	Cd	Cr	Co	Cu	Fe	Pb	Mn	Ni	Se	V	Zn	$PM_{2.5}$
Jan 4, 2021	2.65	*9.93x10^{-4}*	*6.62x10^{-4}*	*1.66x10^{-3}*	*6.62x10^{-4}*	3.19x10^{-2}	6.23x10^{-2}	*9.93x10^{-4}*	1.92x10^{-3}	*9.93x10^{-4}*	*3.31x10^{-3}*	*1.66x10^{-3}*	7.75x10^{-3}	*0.31*
Jan 10, 2021	4.49	*9.91x10^{-4}*	*6.61x10^{-4}*	*1.65x10^{-3}*	*6.61x10^{-4}*	2.29x10^{-2}	5.35x10^{-2}	*9.91x10^{-4}*	1.45x10^{-3}	*9.91x10^{-4}*	*3.30x10^{-3}*	*1.65x10^{-3}*	7.93x10^{-3}	----
Jan 16, 2021	6.22	*9.05x10^{-4}*	*6.04x10^{-4}*	3.14x10^{-3}	*6.04x10^{-4}*	5.00x10^{-2}	1.59x10^{-1}	*9.05x10^{-4}*	4.95x10^{-3}	*9.05x10^{-4}*	*3.02x10^{-3}*	*1.51x10^{-3}*	5.49x10^{-3}	1.29
Jan 22, 2021	14.07	*8.69x10^{-4}*	*5.79x10^{-4}*	*1.45x10^{-3}*	*5.79x10^{-4}*	2.92x10^{-2}	2.69x10^{-1}	2.78x10^{-3}	1.19x10^{-2}	*8.69x10^{-4}*	*2.90x10^{-3}*	*1.45x10^{-3}*	1.80x10^{-2}	0.67
Jan 28, 2021	9.13	*9.38x10^{-4}*	*6.26x10^{-4}*	*1.56x10^{-3}*	*6.26x10^{-4}*	1.61x10^{-2}	1.63x10^{-1}	*9.38x10^{-4}*	6.38x10^{-3}	*9.38x10^{-4}*	*3.13x10^{-3}*	*1.56x10^{-3}*	1.45x10^{-2}	2.25
Feb 2, 2021	4.81	*9.49x10^{-4}*	*6.32x10^{-4}*	*1.58x10^{-3}*	*6.32x10^{-4}*	1.74x10^{-2}	7.40x10^{-2}	*9.49x10^{-4}*	2.21x10^{-3}	*9.49x10^{-4}*	*3.16x10^{-3}*	*1.58x10^{-3}*	1.16x10^{-2}	10.25
Feb 9, 2021	14.31	*9.41x10^{-4}*	*6.28x10^{-4}*	3.14x10^{-3}	*6.28x10^{-4}*	2.27x10^{-2}	2.71x10^{-1}	*9.41x10^{-4}*	9.29x10^{-3}	*9.41x10^{-4}*	*3.14x10^{-3}*	*1.57x10^{-3}*	1.04x10^{-2}	7.62
Feb 15, 2021	58.76	*9.45x10^{-4}*	*6.30x10^{-4}*	5.67x10^{-3}	1.32x10^{-3}	4.02x10^{-2}	2.23	3.34x10^{-3}	6.93x10^{-2}	3.91x10^{-3}	*3.15x10^{-3}*	4.53x10^{-3}	3.51x10^{-2}	2.16
Feb 21, 2021	12.19	*1.01x10^{-3}*	*6.73x10^{-4}*	*1.68x10^{-3}*	*6.73x10^{-4}*	1.68x10^{-2}	1.02x10^{-1}	*1.01x10^{-3}*	4.38x10^{-3}	*1.01x10^{-3}*	*3.37x10^{-3}*	*1.68x10^{-3}*	1.06x10^{-2}	18.19
Feb 27, 2021	106.62	*1.00x10^{-3}*	*6.66x10^{-4}*	7.13x10^{-3}	1.73x10^{-3}	4.26x10^{-2}	2.99	6.13x10^{-3}	9.73x10^{-2}	4.73x10^{-3}	*3.33x10^{-3}*	5.40x10^{-3}	4.86x10^{-2}	4.70
March 5, 2021	6.02	*9.93x10^{-4}*	*6.62x10^{-4}*	4.83x10^{-3}	*6.62x10^{-4}*	3.16x10^{-2}	2.24x10^{-1}	*9.93x10^{-4}*	5.43x10^{-3}	2.45x10^{-3}	*3.31x10^{-3}*	*1.65x10^{-3}*	6.68x10^{-3}	4.58
March 11, 2021	31.25	*9.67x10^{-4}*	*6.44x10^{-4}*	4.64x10^{-3}	*6.44x10^{-4}*	6.70x10^{-2}	7.22x10^{-1}	2.84x10^{-3}	2.28x10^{-2}	2.51x10^{-3}	*3.22x10^{-3}*	*1.61x10^{-3}*	1.78x10^{-2}	2.25
March 17, 2021	38.65	*9.00x10^{-4}*	*6.00x10^{-4}*	4.56x10^{-3}	*6.00x10^{-4}*	6.24x10^{-2}	1.00	1.98x10^{-3}	3.81x10^{-2}	2.64x10^{-3}	*3.00x10^{-3}*	*1.50x10^{-3}*	1.90x10^{-2}	4.01
March 23, 2021	13.89	*9.06x10^{-4}*	*6.04x10^{-4}*	3.56x10^{-3}	*6.04x10^{-4}*	6.28x10^{-2}	2.88x10^{-1}	*9.06x10^{-4}*	7.97x10^{-3}	2.05x10^{-3}	*3.02x10^{-3}*	*1.51x10^{-3}*	8.27x10^{-3}	1.08
March 29, 2021	----	----	----	----	----	----	----	----	----	----	----	----	----	3.09
No. Valid Samples	14	14	14	14	14	14	14	14	14	14	14	14	14	14
% Valid Data	93%	93%	93%	93%	93%	93%	93%	93%	93%	93%	93%	93%	93%	93%
Arithmetic Mean	23.08	9.50x10^{-4}	6.34x10^{-4}	3.30x10^{-3}	7.59x10^{-4}	3.67x10^{-2}	6.15x10^{-1}	1.84x10^{-3}	2.02x10^{-2}	1.85x10^{-3}	3.17x10^{-3}	2.06x10^{-3}	1.58x10^{-2}	4.46
Geometric Mean	13.23	9.50x10^{-4}	6.33x10^{-4}	2.85x10^{-3}	7.15x10^{-4}	3.27x10^{-2}	2.76x10^{-1}	1.47x10^{-3}	9.03x10^{-3}	1.54x10^{-3}	3.17x10^{-3}	1.86x10^{-3}	1.29x10^{-2}	2.72
Max Sample	106.62	1.01x10^{-3}	6.73x10^{-4}	7.13x10^{-3}	1.73x10^{-3}	6.70x10^{-2}	2.99	6.13x10^{-3}	9.73x10^{-2}	4.73x10^{-3}	3.37x10^{-3}	5.40x10^{-3}	4.86x10^{-2}	18.19
Min Sample	2.65	8.69x10^{-4}	5.79x10^{-4}	1.45x10^{-3}	5.79x10^{-4}	1.61x10^{-2}	5.35x10^{-2}	9.05x10^{-4}	1.45x10^{-3}	8.69x10^{-4}	2.90x10^{-3}	1.45x10^{-3}	5.49x10^{-3}	*0.31*
January Max	14.07	9.93x10^{-4}	6.62x10^{-4}	3.14x10^{-3}	6.62x10^{-4}	5.00x10^{-2}	2.69x10^{-1}	2.78x10^{-3}	1.19x10^{-2}	9.93x10^{-4}	3.31x10^{-3}	1.66x10^{-3}	1.80x10^{-2}	2.25
February Max	106.62	1.01x10^{-3}	6.73x10^{-4}	7.13x10^{-3}	1.73x10^{-3}	4.26x10^{-2}	2.99	6.13x10^{-3}	9.73x10^{-2}	4.73x10^{-3}	3.37x10^{-3}	5.40x10^{-3}	4.86x10^{-2}	18.19
March Max	38.65	9.93x10^{-4}	6.62x10^{-4}	4.83x10^{-3}	6.62x10^{-4}	6.70x10^{-2}	1.00	2.84x10^{-3}	3.81x10^{-2}	2.64x10^{-3}	3.31x10^{-3}	1.65x10^{-3}	1.90x10^{-2}	4.58
90th Percentile	52.73	9.98x10^{-4}	6.65x10^{-4}	5.42x10^{-3}	1.13x10^{-3}	6.27x10^{-2}	1.86	3.19x10^{-3}	5.99x10^{-2}	3.53x10^{-3}	3.33x10^{-3}	3.68x10^{-3}	3.03x10^{-2}	9.46
95th Percentile	75.51	1.00x10^{-3}	6.69x10^{-4}	6.18x10^{-3}	1.47x10^{-3}	6.43x10^{-2}	2.50	4.32x10^{-3}	7.91x10^{-2}	4.19x10^{-3}	3.34x10^{-3}	4.84x10^{-3}	3.98x10^{-2}	13.03
Comparison Limit	120	0.3	0.025	0.5	0.1	50	4	0.5	0.4	0.2	10	2	120	27
No. > Limit	0	0	0	0	0	0	0	0	0	0	0	0	0	0
MDL (µg)	2,300	3	2	5	2	4	20	3	1	3	10	5	5	15
No. < MDL	0	14	14	6	12	0	0	9	0	8	14	12	0	1

Notes
All non-detectable results (i.e., < MDL) are reported as ½ MDL and are denoted by italics and underlining.
N/A: Not applicable
----: Invalid sample

Gallinger Road Station Monitoring Results
(concentrations expressed in µg/m^3)

Date	TSP	As	Cd	Cr	Co	Cu	Fe	Pb	Mn	Ni	Se	V	Zn	$PM_{2.5}$
Jan 4, 2021	18.95	*9.54x10^{-4}*	*6.36x10^{-4}*	*1.59x10^{-3}*	*6.36x10^{-4}*	4.69x10^{-2}	3.24x10^{-1}	2.61x10^{-3}	1.23x10^{-2}	*9.54x10^{-4}*	*3.18x10^{-3}*	*1.59x10^{-3}*	3.52x10^{-2}	*0.31*
Jan 10, 2021	15.63	*9.27x10^{-4}*	*6.18x10^{-4}*	3.15x10^{-3}	*6.18x10^{-4}*	4.81x10^{-2}	3.84x10^{-1}	1.85x10^{-3}	1.04x10^{-2}	1.98x10^{-3}	*3.09x10^{-3}*	*1.54x10^{-3}*	1.42x10^{-2}	2.83
Jan 16, 2021	6.33	*9.04x10^{-4}*	*6.03x10^{-4}*	*1.51x10^{-3}*	*6.03x10^{-4}*	1.34x10^{-1}	1.52x10^{-1}	*9.04x10^{-4}*	3.74x10^{-3}	*9.04x10^{-4}*	*3.01x10^{-3}*	*1.51x10^{-3}*	4.64x10^{-3}	6.16
Jan 22, 2021	12.61	*9.27x10^{-4}*	*6.18x10^{-4}*	4.20x10^{-3}	*6.18x10^{-4}*	6.55x10^{-2}	3.26x10^{-1}	*9.27x10^{-4}*	9.64x10^{-3}	2.16x10^{-3}	*3.09x10^{-3}*	*1.55x10^{-3}*	1.24x10^{-2}	*0.31*
Jan 28, 2021	8.79	*8.91x10^{-4}*	*5.94x10^{-4}*	3.03x10^{-3}	*5.94x10^{-4}*	3.98x10^{-2}	1.66x10^{-1}	*8.91x10^{-4}*	3.98x10^{-3}	*8.91x10^{-4}*	*2.97x10^{-3}*	*1.48x10^{-3}*	5.82x10^{-3}	1.71
Feb 2, 2021	11.00	*9.59x10^{-4}*	*6.40x10^{-4}*	*1.60x10^{-3}*	*6.40x10^{-4}*	4.43x10^{-2}	1.71x10^{-1}	2.56x10^{-3}	5.76x10^{-3}	*9.59x10^{-4}*	*3.20x10^{-3}*	*1.60x10^{-3}*	1.69x10^{-2}	8.57
Feb 9, 2021	97.90	2.71x10^{-3}	*5.90x10^{-4}*	4.78x10^{-3}	*5.90x10^{-4}*	5.31x10^{-2}	1.29	1.75x10^{-2}	6.66x10^{-2}	2.89x10^{-3}	*2.95x10^{-3}*	*1.47x10^{-3}*	1.44x10^{-1}	7.53
Feb 15, 2021	46.87	*8.54x10^{-4}*	*5.69x10^{-4}*	3.76x10^{-3}	*5.69x10^{-4}*	7.97x10^{-2}	1.13	3.99x10^{-3}	3.87x10^{-2}	2.39x10^{-3}	*2.85x10^{-3}*	*1.42x10^{-3}*	3.02x10^{-2}	3.37
Feb 21, 2021	23.74	*9.47x10^{-4}*	*6.31x10^{-4}*	3.22x10^{-3}	*6.31x10^{-4}*	7.58x10^{-2}	2.99x10^{-1}	2.02x10^{-3}	1.05x10^{-2}	*9.47x10^{-4}*	*3.16x10^{-3}*	*1.58x10^{-3}*	2.20x10^{-2}	18.52
Feb 27, 2021	15.88	*8.76x10^{-4}*	*5.84x10^{-4}*	4.79x10^{-3}	*5.84x10^{-4}*	1.35x10^{-1}	4.26x10^{-1}	*8.76x10^{-4}*	1.28x10^{-2}	2.39x10^{-3}	*2.92x10^{-3}*	*1.46x10^{-3}*	1.27x10^{-2}	2.91
March 5, 2021	8.12	*9.30x10^{-4}*	*6.20x10^{-4}*	5.64x10^{-3}	*6.20x10^{-4}*	4.72x10^{-2}	2.71x10^{-1}	*9.30x10^{-4}*	5.58x10^{-3}	2.73x10^{-3}	*3.10x10^{-3}*	*1.55x10^{-3}*	4.59x10^{-3}	2.33
March 11, 2021	14.85	*1.02x10^{-3}*	*6.81x10^{-4}*	4.77x10^{-3}	*6.81x10^{-4}*	1.08x10^{-1}	3.47x10^{-1}	*1.02x10^{-3}*	1.01x10^{-2}	2.59x10^{-3}	*3.41x10^{-3}*	*1.70x10^{-3}*	1.55x10^{-2}	1.66
March 17, 2021	35.37	*9.84x10^{-4}*	*6.56x10^{-4}*	4.46x10^{-3}	*6.56x10^{-4}*	1.00x10^{-1}	8.20x10^{-1}	2.49x10^{-3}	2.85x10^{-2}	2.82x10^{-3}	*3.28x10^{-3}*	*1.64x10^{-3}*	2.31x10^{-2}	1.21
March 23, 2021	7.59	*9.33x10^{-4}*	*6.22x10^{-4}*	3.23x10^{-3}	*6.22x10^{-4}*	1.13x10^{-1}	1.18x10^{-1}	*9.33x10^{-4}*	3.05x10^{-3}	*9.33x10^{-4}*	*3.11x10^{-3}*	*1.56x10^{-3}*	5.72x10^{-3}	1.66
March 29, 2021	60.26	*9.90x10^{-4}*	*6.60x10^{-4}*	4.49x10^{-3}	*6.60x10^{-4}*	5.14x10^{-2}	1.10	2.51x10^{-3}	4.49x10^{-2}	2.97x10^{-3}	*3.30x10^{-3}*	*1.65x10^{-3}*	2.35x10^{-2}	4.08
No. Valid Samples	15	15	15	15	15	15	15	15	15	15	15	15	15	15
% Valid Data	100%	100%	100%	100%	100%	100%	100%	100%	100%	100%	100%	100%	100%	100%
Arithmetic Mean	25.59	1.05x10^{-3}	6.21x10^{-4}	3.61x10^{-3}	6.21x10^{-4}	7.62x10^{-2}	4.88x10^{-1}	2.80x10^{-3}	1.78x10^{-2}	1.90x10^{-3}	3.11x10^{-3}	1.55x10^{-3}	2.47x10^{-2}	4.21
Geometric Mean	18.16	1.00x10^{-3}	6.21x10^{-4}	3.35x10^{-3}	6.21x10^{-4}	6.98x10^{-2}	3.69x10^{-1}	1.79x10^{-3}	1.15x10^{-2}	1.69x10^{-3}	3.10x10^{-3}	1.55x10^{-3}	1.56x10^{-2}	2.53
Max Sample	97.90	2.71x10^{-3}	6.81x10^{-4}	5.64x10^{-3}	6.81x10^{-4}	1.35x10^{-1}	1.29	1.75x10^{-2}	6.66x10^{-2}	2.97x10^{-3}	3.41x10^{-3}	1.70x10^{-3}	1.44x10^{-1}	18.52
Min Sample	6.33	8.54x10^{-4}	5.69x10^{-4}	1.51x10^{-3}	5.69x10^{-4}	3.98x10^{-2}	1.18x10^{-1}	8.76x10^{-4}	3.05x10^{-3}	8.91x10^{-4}	2.85x10^{-3}	1.42x10^{-3}	4.59x10^{-3}	*0.31*
January Max	18.95	9.54x10^{-4}	6.36x10^{-4}	4.20x10^{-3}	6.36x10^{-4}	1.34x10^{-1}	3.84x10^{-1}	2.61x10^{-3}	1.23x10^{-2}	2.16x10^{-3}	3.18x10^{-3}	1.59x10^{-3}	3.52x10^{-2}	6.16
February Max	97.90	2.71x10^{-3}	6.40x10^{-4}	4.79x10^{-3}	6.40x10^{-4}	1.35x10^{-1}	1.29	1.75x10^{-2}	6.66x10^{-2}	2.89x10^{-3}	3.20x10^{-3}	1.60x10^{-3}	1.44x10^{-1}	18.52
March Max	60.26	1.02x10^{-3}	6.81x10^{-4}	5.64x10^{-3}	6.81x10^{-4}	1.13x10^{-1}	1.10	2.51x10^{-3}	4.49x10^{-2}	2.97x10^{-3}	3.41x10^{-3}	1.70x10^{-3}	2.35x10^{-2}	4.08
90th Percentile	54.91	1.01x10^{-3}	6.59x10^{-4}	4.78x10^{-3}	6.59x10^{-4}	1.25x10^{-1}	1.12	3.43x10^{-3}	4.24x10^{-2}	2.86x10^{-3}	3.29x10^{-3}	1.65x10^{-3}	3.32x10^{-2}	8.16
95th Percentile	71.56	1.53x10^{-3}	6.66x10^{-4}	5.04 x10^{-3}	6.66x10^{-4}	1.34x10^{-1}	1.18	8.05x10^{-3}	5.14x10^{-2}	2.91x10^{-3}	3.33x10^{-3}	1.67x10^{-3}	6.78x10^{-2}	11.56
Comparison Limit	120	0.3	0.025	0.5	0.1	50	4	0.5	0.4	0.2	10	2	120	27
No. > Limit	0	0	0	0	0	0	0	0	0	0	0	0	0	0
MDL (µg)	2,300	3	2	5	2	4	20	3	1	3	10	5	5	15
No. < MDL	0	14	15	3	15	0	0	7	0	6	15	15	0	2

Notes

All non-detectable results (i.e., < MDL) are reported as ½ MDL and are denoted by italics and underlining.
N/A: Not applicable
----: Invalid sample

Northwest Station Monitoring Results
(concentrations expressed in µg/m^3)

Date	TSP	As	Cd	Cr	Co	Cu	Fe	Pb	Mn	Ni	Se	V	Zn	$PM_{2.5}$
Jan 4, 2021	3.01	*9.41x10^{-4}*	*6.27x10^{-4}*	3.20x10^{-3}	*6.27x10^{-4}*	1.19x10^{-1}	6.65x10^{-2}	*9.41x10^{-4}*	2.51x10^{-3}	*9.41x10^{-4}*	*3.14x10^{-3}*	*1.57x10^{-3}*	7.96x10^{-3}	----
Jan 10, 2021	5.49	*9.25x10^{-4}*	*6.17x10^{-4}*	*1.54x10^{-3}*	*6.17x10^{-4}*	8.88x10^{-2}	5.12x10^{-2}	*9.25x10^{-4}*	1.29x10^{-3}	*9.25x10^{-4}*	*3.08x10^{-3}*	*1.54x10^{-3}*	6.41x10^{-3}	4.91
Jan 16, 2021	3.38	*9.21x10^{-4}*	*6.14x10^{-4}*	*1.54x10^{-3}*	*6.14x10^{-4}*	1.75x10^{-1}	8.35x10^{-2}	*9.21x10^{-4}*	2.21x10^{-3}	2.09x10^{-3}	*3.07x10^{-3}*	*1.54x10^{-3}*	7.80x10^{-3}	*0.31*
Jan 22, 2021	3.17	*9.16x10^{-4}*	*6.10x10^{-4}*	3.30x10^{-3}	*6.10x10^{-4}*	2.47x10^{-1}	9.46x10^{-2}	*9.16x10^{-4}*	2.38x10^{-3}	*9.16x10^{-4}*	*3.05x10^{-3}*	*1.53x10^{-3}*	4.46x10^{-3}	5.28
Jan 28, 2021	178.93	4.39x10^{-3}	*5.85x10^{-4}*	4.91x10^{-3}	1.34x10^{-3}	9.41x10^{-2}	2.21	4.79x10^{-2}	1.48x10^{-1}	3.10x10^{-3}	*2.92x10^{-3}*	3.27x10^{-3}	1.29x10^{-1}	3.41
Feb 2, 2021	10.93	*9.26x10^{-4}*	*6.18x10^{-4}*	3.27x10^{-3}	*6.18x10^{-4}*	7.10x10^{-2}	1.18x10^{-1}	1.85x10^{-3}	4.51x10^{-3}	1.98x10^{-3}	*3.09x10^{-3}*	*1.54x10^{-3}*	1.49x10^{-2}	8.90
Feb 9, 2021	11.88	*9.14x10^{-4}*	*6.09x10^{-4}*	3.29x10^{-3}	*6.09x10^{-4}*	5.98x10^{-2}	2.03x10^{-1}	*9.14x10^{-4}*	7.43x10^{-3}	*9.14x10^{-4}*	*3.05x10^{-3}*	*1.52x10^{-3}*	5.85x10^{-3}	4.95
Feb 15, 2021	11.54	*8.97x10^{-4}*	*5.98x10^{-4}*	3.23x10^{-3}	*5.98x10^{-4}*	6.16x10^{-2}	3.21x10^{-1}	*8.97x10^{-4}*	1.07x10^{-2}	*8.97x10^{-4}*	*2.99x10^{-3}*	*1.50x10^{-3}*	8.55x10^{-3}	3.28
Feb 21, 2021	20.93	*8.84x10^{-4}*	*5.90x10^{-4}*	3.71x10^{-3}	*5.90x10^{-4}*	6.25x10^{-2}	3.77x10^{-1}	*8.84x10^{-4}*	1.36x10^{-2}	1.89x10^{-3}	*2.95x10^{-3}*	*1.47x10^{-3}*	1.40x10^{-2}	14.64
Feb 27, 2021	9.24	*1.01x10^{-3}*	*6.75x10^{-4}*	4.86x10^{-3}	*6.75x10^{-4}*	8.03x10^{-2}	1.79x10^{-1}	*1.01x10^{-3}*	3.98x10^{-3}	2.43x10^{-3}	*3.37x10^{-3}*	*1.69x10^{-3}*	4.45x10^{-3}	3.16
March 5, 2021	19.22	*9.71x10^{-4}*	*6.47x10^{-4}*	4.59x10^{-3}	*6.47x10^{-4}*	9.00x10^{-2}	5.65x10^{-1}	3.75x10^{-3}	1.77x10^{-2}	2.65x10^{-3}	*3.24x10^{-3}*	*1.62x10^{-3}*	2.15x10^{-2}	1.83
March 11, 2021	12.49	*9.76x10^{-4}*	*6.51x10^{-4}*	3.45x10^{-3}	*6.51x10^{-4}*	4.42x10^{-2}	2.64x10^{-1}	*9.76x10^{-4}*	7.29x10^{-3}	*9.76x10^{-4}*	*3.25x10^{-3}*	*1.63x10^{-3}*	6.18x10^{-3}	1.41
March 17, 2021	9.39	*9.78x10^{-4}*	*6.52x10^{-4}*	4.50x10^{-3}	*6.52x10^{-4}*	7.63x10^{-2}	1.80x10^{-1}	*9.78x10^{-4}*	6.39x10^{-3}	2.48x10^{-3}	*3.26x10^{-3}*	*1.63x10^{-3}*	5.80x10^{-3}	3.16
March 23, 2021	----	----	----	----	----	----	----	----	----	----	----	----	----	4.57
March 29, 2021	56.24	*9.61x10^{-4}*	*6.41x10^{-4}*	5.57x10^{-3}	*6.41x10^{-4}*	4.53x10^{-2}	1.46	2.31x10^{-3}	5.11x10^{-2}	3.78x10^{-3}	*3.20x10^{-3}*	3.84E-03	2.21x10^{-2}	----
No. Valid Samples	14	14	14	14	14	14	14	14	14	14	14	14	14	13
% Valid Data	93%	93%	93%	93%	93%	93%	93%	93%	93%	93%	93%	93%	93%	87%
Arithmetic Mean	25.42	1.19x10^{-3}	6.24x10^{-4}	3.64x10^{-3}	6.78x10^{-4}	9.39x10^{-2}	4.41x10^{-1}	4.65x10^{-3}	1.99x10^{-2}	1.85x10^{-3}	3.12x10^{-3}	1.85x10^{-3}	1.85x10^{-2}	4.60
Geometric Mean	11.92	1.05x10^{-3}	6.23x10^{-4}	3.42x10^{-3}	6.61x10^{-4}	8.33x10^{-2}	2.31x10^{-1}	1.53x10^{-3}	7.58x10^{-3}	1.63x10^{-3}	3.12x10^{-3}	1.76x10^{-3}	1.04x10^{-2}	3.36
Max Sample	178.93	4.39x10^{-3}	6.75x10^{-4}	5.57x10^{-3}	1.34x10^{-3}	2.47x10^{-1}	2.21	4.79x10^{-2}	1.48x10^{-1}	3.78x10^{-3}	3.37x10^{-3}	3.84x10^{-3}	1.29x10^{-1}	14.64
Min Sample	3.01	8.84x10^{-4}	5.85x10^{-4}	1.54x10^{-3}	5.90x10^{-4}	4.42x10^{-2}	5.12x10^{-2}	8.84x10^{-4}	1.29x10^{-3}	8.97x10^{-4}	2.92x10^{-3}	1.47x10^{-3}	4.45x10^{-3}	*0.31*
January Max	178.93	4.39x10^{-3}	6.27x10^{-4}	4.91x10^{-3}	1.34x10^{-3}	2.47x10^{-1}	2.21	4.79x10^{-2}	1.48x10^{-1}	3.10x10^{-3}	3.14x10^{-3}	3.27x10^{-3}	1.29x10^{-1}	5.28
February Max	20.93	1.01x10^{-3}	6.75x10^{-4}	4.86x10^{-3}	6.75x10^{-4}	8.03x10^{-2}	3.77x10^{-1}	1.85x10^{-3}	1.36x10^{-2}	2.43x10^{-3}	3.37x10^{-3}	1.69x10^{-3}	1.49x10^{-2}	14.64
March Max	56.24	9.78x10^{-4}	6.52x10^{-4}	5.57x10^{-3}	6.52x10^{-4}	9.00x10^{-2}	1.46	3.75x10^{-3}	5.11x10^{-2}	3.78x10^{-3}	3.26x10^{-3}	3.84x10^{-3}	2.21x10^{-2}	4.57
90th Percentile	45.65	1.00x10^{-3}	6.52x10^{-4}	4.90x10^{-3}	6.68x10^{-4}	1.58x10^{-1}	1.19	3.32x10^{-3}	4.11x10^{-2}	2.97x10^{-3}	3.26x10^{-3}	2.80x10^{-3}	2.19x10^{-2}	8.18
95th Percentile	99.18	2.19x10^{-3}	6.60x10^{-4}	5.14x10^{-3}	9.09x10^{-4}	2.00x10^{-1}	1.72	1.92x10^{-2}	8.50x10^{-2}	3.34x10^{-3}	3.30x10^{-3}	3.47x10^{-3}	5.96x10^{-2}	11.19
Comparison Limit	120	0.3	0.025	0.5	0.1	50	4	0.5	0.4	0.2	10	2	120	27
No. > Limit	1	0	0	0	0	0	0	0	0	0	0	0	0	0
MDL (µg)	2,300	3	2	5	2	4	20	3	1	3	10	5	5	15
No. < MDL	0	13	14	2	13	0	0	10	0	6	14	12	0	1

Notes
All non-detectable results (i.e., < MDL) are reported as ½ MDL and are denoted by italics and underlining.
N/A: Not applicable
----: Invalid sample

APPENDIX A-2:

TOTAL DUSTFALL SAMPLING RESULTS

Tait Road Station Monitoring Results (concentrations expressed in g/m²/30 days)				
Month	**No. Exposure Days**	**Insoluble Dustfall**	**Soluble Dustfall**	**Total Dustfall**
January	31	*0.15*	*0.15*	*0.15*
February	28	1.65	*0.17*	1.95
March	31	3.15	0.45	3.57
			No. Valid Samples	3
			% Valid Data	100%
			Arithmetic Mean	1.89
			Max Monthly Concentration	3.57
			Min Monthly Concentration	*0.15*
			Comparison Limit	7
			No. > Limit	0
			MDL	0.3
			No. < MDL	1

Gallinger Road Station Monitoring Results (concentrations expressed in g/m²/30 days)				
Month	**No. Exposure Days**	**Insoluble Dustfall**	**Soluble Dustfall**	**Total Dustfall**
January	31	0.75	*0.15*	0.84
February	28	2.19	*0.17*	2.43
March	31	2.85	0.42	3.24
			No. Valid Samples	3
			% Valid Data	100%
			Arithmetic Mean	2.17
			Max Monthly Concentration	3.24
			Min Monthly Concentration	0.84
			Comparison Limit	7
			No. > Limit	0
			MDL	0.3
			No. < MDL	0

Northwest Station Monitoring Results (concentrations expressed in g/m²/30 days)				
Month	**No. Exposure Days**	**Insoluble Dustfall**	**Soluble Dustfall**	**Total Dustfall**
January	N/A	N/A	N/A	N/A
February	28	*0.18*	*0.18*	*0.18*
March	31	1.38	0.48	1.86
			No. Valid Samples	2
			% Valid Data	100%
			Arithmetic Mean	1.02
			Max Monthly Concentration	1.86
			Min Monthly Concentration	*0.18*
			Comparison Limit	7
			No. > Limit	0
			MDL	0.3
			No. < MDL	1

NOP1 Station Monitoring Results (concentrations expressed in g/m²/30 days)				
Month	**No. Exposure Days**	**Insoluble Dustfall**	**Soluble Dustfall**	**Total Dustfall**
January	31	17.55	0.87	18.39
February	28	29.82	0.78	30.60
March	31	19.74	0.93	20.67
			No. Valid Samples	3
			% Valid Data	100%
			Arithmetic Mean	23.22
			Max Monthly Concentration	30.60
			Min Monthly Concentration	18.39
			Comparison Limit	7
			No. > Limit	3
			MDL	0.3
			No. < MDL	0

WCP1 Station Monitoring Results (concentrations expressed in g/m²/30 days)				
Month	**No. Exposure Days**	**Insoluble Dustfall**	**Soluble Dustfall**	**Total Dustfall**
January	31	1.89	*0.15*	2.04
February	28	*0.17*	0.45	0.45
March	31	8.97	0.57	9.54
			No. Valid Samples	3
			% Valid Data	100%
			Arithmetic Mean	4.01
			Max Monthly Concentration	9.54
			Min Monthly Concentration	0.45
			Comparison Limit	7
			No. > Limit	1
			MDL	0.3
			No. < MDL	0

GH1 Station Monitoring Results (concentrations expressed in g/m²/30 days)				
Month	**No. Exposure Days**	**Insoluble Dustfall**	**Soluble Dustfall**	**Total Dustfall**
January	31	2.49	0.45	2.91
February	28	5.34	1.02	6.36
March	31	4.86	0.33	5.19
			No. Valid Samples	3
			% Valid Data	100%
			Arithmetic Mean	4.82
			Max Monthly Concentration	6.36
			Min Monthly Concentration	2.91
			Comparison Limit	7
			No. > Limit	0
			MDL	0.3
			No. < MDL	0

CP1 Station Monitoring Results (concentrations expressed in g/m^2/30 days)				
Month	**No. Exposure Days**	**Insoluble Dustfall**	**Soluble Dustfall**	**Total Dustfall**
January	N/A	N/A	N/A	N/A
February	28	3.21	0.51	3.72
March	31	1.62	0.60	2.22
			No. Valid Samples	2
			% Valid Data	100%
			Arithmetic Mean	2.97
			Max Monthly Concentration	3.72
			Min Monthly Concentration	2.22
			Comparison Limit	7
			No. > Limit	0
			MDL	0.3
			No. < MDL	0

newgold Rainy River

SPP1 Station Monitoring Results (concentrations expressed in g/m^2/30 days)				
Month	**No. Exposure Days**	**Insoluble Dustfall**	**Soluble Dustfall**	**Total Dustfall**
Jan 6, 2021	7	14.94	1.56	16.50
Jan 13, 2021	7	17.43	*0.65*	18.63
Jan 20, 2021	7	2.73	*0.65*	3.15
Jan 27, 2021	7	5.19	*0.65*	5.52
Feb 3, 2021	7	0.69	*0.15*	0.72
Feb 10, 2021	7	81.60	2.67	84.30
Feb 17, 2021	7	51.00	2.43	53.40
Feb 24, 2021	7	19.65	1.41	21.06
Mar 3, 2021	7	70.20	2.52	72.60
Mar 10, 2021	7	6.78	1.56	8.34
Mar 17, 2021	7	8.22	*0.65*	9.45
Mar 24, 2021	7	7.14	1.98	9.15
Mar 31, 2021	7	13.26	*0.65*	14.52

No. Valid Samples	13
% Valid Data	100%
Arithmetic Mean	24.41
Max Concentration	84.30
Min Concentration	0.72
Comparison Limit	7
No. > Limit	10
MDL	1.29
No. < MDL	0

APPENDIX A-3:

DUSTFALL METALS SAMPLING RESULTS

newgold Rainy River

SPP1 Station Monitoring Results
(concentrations expressed in g/m^2/30 days)

Metal	Jan 6	Jan 13	Jan 20	Jan 27	Feb 3	Feb 10	Feb 17	Feb 24	Mar 3	Mar 10	Mar 17	Mar 24	Mar 31	Max
Aluminum	1.95×10^{-1}	2.54×10^{-1}	6.33×10^{-2}	1.10×10^{-1}	1.07×10^{-2}	4.26×10^{-1}	4.05×10^{-1}	1.88×10^{-1}	4.98×10^{-1}	6.03×10^{-2}	1.11×10^{-1}	1.34×10^{-1}	1.28×10^{-1}	4.98×10^{-1}
Antimony	5.28×10^{-5}	4.08×10^{-5}	8.55×10^{-6}	4.41×10^{-5}	2.55×10^{-6}	3.33×10^{-4}	1.83×10^{-4}	4.98×10^{-5}	9.33×10^{-5}	4.20×10^{-5}	1.65×10^{-5}	4.20×10^{-5}	1.80×10^{-5}	3.33×10^{-4}
Arsenic	5.31×10^{-4}	7.08×10^{-4}	4.74×10^{-5}	1.67×10^{-4}	1.53×10^{-5}	2.70×10^{-3}	1.04×10^{-3}	2.55×10^{-4}	6.00×10^{-4}	5.10×10^{-5}	8.55×10^{-5}	7.65×10^{-5}	7.05×10^{-5}	2.70×10^{-3}
Barium	8.34×10^{-4}	1.08×10^{-3}	3.54×10^{-4}	5.16×10^{-4}	8.37×10^{-5}	5.19×10^{-3}	3.33×10^{-3}	1.22×10^{-3}	3.42×10^{-3}	4.17×10^{-4}	4.38×10^{-4}	6.00×10^{-4}	9.18×10^{-4}	5.19×10^{-3}
Beryllium	5.85×10^{-5}	4.20×10^{-5}	4.20×10^{-5}	4.20×10^{-5}	1.31×10^{-5}	6.60×10^{-5}	7.35×10^{-5}	4.20×10^{-5}	4.20×10^{-5}	4.20×10^{-5}	4.20×10^{-5}	4.20×10^{-5}	4.50×10^{-5}	7.35×10^{-5}
Bismuth	5.85×10^{-5}	4.20×10^{-5}	4.20×10^{-5}	4.20×10^{-5}	1.31×10^{-5}	6.60×10^{-5}	7.35×10^{-5}	4.20×10^{-5}	1.35×10^{-4}	4.20×10^{-5}	4.20×10^{-5}	4.20×10^{-5}	4.50×10^{-5}	1.35×10^{-4}
Boron	1.16×10^{-3}	8.55×10^{-4}	8.55×10^{-4}	8.55×10^{-4}	2.55×10^{-4}	1.32×10^{-3}	1.47×10^{-3}	8.55×10^{-4}	8.55×10^{-4}	8.55×10^{-4}	8.55×10^{-4}	8.55×10^{-4}	8.85×10^{-4}	1.47×10^{-3}
Cadmium	5.55×10^{-5}	9.15×10^{-5}	4.20×10^{-6}	2.88×10^{-5}	2.61×10^{-6}	8.43×10^{-4}	4.68×10^{-4}	1.08×10^{-4}	1.81×10^{-4}	1.29×10^{-5}	2.16×10^{-5}	2.43×10^{-5}	2.16×10^{-5}	8.43×10^{-4}
Calcium	3.18×10^{-1}	3.72×10^{-1}	1.38×10^{-1}	1.02×10^{-1}	1.46×10^{-2}	9.48×10^{-1}	7.98×10^{-1}	5.19×10^{-1}	1.31	1.58×10^{-1}	2.31×10^{-1}	1.90×10^{-1}	2.61×10^{-1}	1.31
Chromium	1.65×10^{-4}	2.94×10^{-4}	1.14×10^{-4}	9.60×10^{-5}	1.31×10^{-5}	4.95×10^{-4}	3.69×10^{-4}	2.40×10^{-4}	7.65×10^{-4}	4.20×10^{-5}	1.02×10^{-4}	1.44×10^{-4}	1.53×10^{-4}	7.65×10^{-4}
Cobalt	4.89×10^{-5}	9.15×10^{-5}	2.58×10^{-5}	3.15×10^{-5}	2.55×10^{-6}	2.46×10^{-4}	2.04×10^{-4}	8.40×10^{-5}	2.46×10^{-4}	8.55×10^{-6}	3.09×10^{-5}	3.84×10^{-5}	3.06×10^{-5}	2.46×10^{-4}
Copper	3.66×10^{-3}	1.83×10^{-3}	3.36×10^{-4}	1.71×10^{-3}	1.27×10^{-4}	4.38×10^{-3}	2.49×10^{-3}	1.15×10^{-3}	2.58×10^{-3}	2.16×10^{-4}	2.61×10^{-3}	4.41×10^{-4}	2.25×10^{-4}	4.38×10^{-3}
Iron	1.93×10^{-1}	2.98×10^{-1}	6.84×10^{-2}	1.15×10^{-1}	1.14×10^{-2}	6.66×10^{-1}	5.85×10^{-1}	2.21×10^{-1}	6.09×10^{-1}	4.89×10^{-2}	9.42×10^{-2}	1.38×10^{-1}	9.18×10^{-2}	6.66×10^{-1}
Lead	2.72×10^{-3}	1.16×10^{-3}	8.40×10^{-5}	1.29×10^{-3}	1.85×10^{-4}	1.29×10^{-2}	1.10×10^{-2}	2.64×10^{-3}	4.80×10^{-3}	5.19×10^{-4}	5.70×10^{-4}	5.79×10^{-4}	8.43×10^{-4}	1.29×10^{-2}
Lithium	5.85×10^{-4}	4.20×10^{-4}	4.20×10^{-4}	4.20×10^{-4}	1.31×10^{-4}	6.60×10^{-4}	7.35×10^{-4}	4.20×10^{-4}	4.20×10^{-4}	4.20×10^{-4}	4.20×10^{-4}	4.20×10^{-4}	4.50×10^{-4}	7.35×10^{-4}
Magnesium	9.78×10^{-2}	1.22×10^{-1}	3.21×10^{-2}	4.47×10^{-2}	4.56×10^{-3}	1.71×10^{-1}	1.67×10^{-1}	9.06×10^{-2}	3.90×10^{-1}	2.56×10^{-2}	5.07×10^{-2}	7.41×10^{-2}	5.37×10^{-2}	3.90×10^{-1}
Manganese	1.32×10^{-2}	1.16×10^{-2}	2.40×10^{-3}	5.37×10^{-3}	5.13×10^{-4}	5.73×10^{-2}	3.54×10^{-2}	1.81×10^{-2}	2.88×10^{-2}	3.93×10^{-3}	6.06×10^{-3}	5.04×10^{-3}	5.58×10^{-3}	5.73×10^{-2}
Molybdenum	2.82×10^{-5}	2.34×10^{-5}	1.17×10^{-5}	1.35×10^{-5}	1.31×10^{-6}	4.32×10^{-5}	3.09×10^{-5}	2.34×10^{-5}	4.02×10^{-5}	2.28×10^{-5}	1.32×10^{-5}	1.17×10^{-5}	8.85×10^{-6}	4.32×10^{-5}
Nickel	5.85×10^{-5}	2.34×10^{-4}	9.90×10^{-5}	4.20×10^{-5}	1.31×10^{-5}	4.11×10^{-4}	3.48×10^{-4}	1.98×10^{-4}	7.14×10^{-4}	4.20×10^{-5}	1.02×10^{-4}	1.38×10^{-4}	1.17×10^{-4}	7.14×10^{-4}
Phosphorus	5.85×10^{-3}	8.55×10^{-3}	4.20×10^{-3}	4.20×10^{-3}	1.31×10^{-3}	2.64×10^{-2}	2.34×10^{-2}	4.20×10^{-3}	2.40×10^{-2}	4.20×10^{-3}	4.20×10^{-3}	4.20×10^{-3}	4.50×10^{-3}	2.64×10^{-2}
Potassium	5.22×10^{-2}	5.31×10^{-2}	1.44×10^{-2}	2.58×10^{-2}	4.56×10^{-3}	2.88×10^{-1}	1.68×10^{-1}	6.18×10^{-2}	1.46×10^{-1}	2.22×10^{-2}	2.73×10^{-2}	3.81×10^{-2}	5.73×10^{-2}	2.88×10^{-1}
Selenium	1.16×10^{-4}	8.55×10^{-5}	8.55×10^{-5}	8.55×10^{-5}	2.55×10^{-5}	1.32×10^{-4}	1.47×10^{-4}	8.55×10^{-5}	8.55×10^{-5}	8.55×10^{-5}	8.55×10^{-5}	8.55×10^{-5}	8.85×10^{-5}	1.47×10^{-4}
Silicon	2.54×10^{-1}	3.84×10^{-1}	9.21×10^{-2}	1.55×10^{-1}	1.19×10^{-2}	6.96×10^{-1}	5.04×10^{-1}	2.42×10^{-1}	8.19×10^{-1}	8.73×10^{-2}	1.44×10^{-1}	1.88×10^{-1}	2.16×10^{-1}	8.19×10^{-1}
Silver	1.28×10^{-4}	5.46×10^{-5}	3.81×10^{-6}	3.15×10^{-5}	2.28×10^{-6}	2.00×10^{-4}	1.95×10^{-4}	3.24×10^{-5}	7.50×10^{-5}	6.06×10^{-6}	1.84×10^{-5}	1.69×10^{-5}	2.10×10^{-5}	2.00×10^{-4}
Sodium	1.80×10^{-2}	2.19×10^{-2}	1.38×10^{-2}	9.00×10^{-3}	4.41×10^{-3}	1.98×10^{-2}	2.43×10^{-2}	1.56×10^{-2}	3.54×10^{-2}	1.44×10^{-2}	1.71×10^{-2}	1.62×10^{-2}	2.49×10^{-2}	3.54×10^{-2}
Strontium	6.18×10^{-4}	9.12×10^{-4}	2.89×10^{-4}	3.60×10^{-4}	5.22×10^{-5}	4.11×10^{-3}	2.45×10^{-3}	1.08×10^{-3}	2.15×10^{-3}	3.69×10^{-4}	4.86×10^{-4}	5.76×10^{-4}	6.78×10^{-4}	4.11×10^{-3}
Thallium	1.16×10^{-5}	8.55×10^{-6}	8.55×10^{-6}	8.55×10^{-6}	2.55×10^{-6}	1.32×10^{-5}	1.47×10^{-5}	8.55×10^{-6}	8.55×10^{-6}	8.55×10^{-6}	8.55×10^{-6}	8.55×10^{-6}	8.85×10^{-6}	1.47×10^{-5}
Tin	1.16×10^{-5}	8.55×10^{-6}	8.55×10^{-6}	8.55×10^{-6}	2.55×10^{-6}	1.32×10^{-5}	1.47×10^{-5}	8.55×10^{-6}	8.55×10^{-6}	8.55×10^{-6}	8.55×10^{-6}	8.55×10^{-6}	8.85×10^{-6}	1.47×10^{-5}
Titanium	2.52×10^{-3}	4.17×10^{-3}	8.55×10^{-4}	8.55×10^{-4}	2.55×10^{-4}	8.49×10^{-3}	6.51×10^{-3}	3.00×10^{-3}	1.32×10^{-2}	8.55×10^{-4}	1.77×10^{-3}	2.07×10^{-3}	1.92×10^{-3}	1.32×10^{-2}
Uranium	4.26×10^{-6}	5.07×10^{-6}	8.55×10^{-7}	3.09×10^{-6}	2.55×10^{-7}	2.18×10^{-5}	1.70×10^{-5}	4.92×10^{-6}	2.21×10^{-5}	3.45×10^{-6}	3.45×10^{-6}	2.16×10^{-6}	4.50×10^{-6}	2.21×10^{-5}
Vanadium	1.16×10^{-4}	4.05×10^{-4}	8.55×10^{-5}	8.55×10^{-5}	2.55×10^{-5}	3.93×10^{-4}	3.87×10^{-4}	2.67×10^{-4}	9.93×10^{-4}	8.55×10^{-5}	8.55×10^{-5}	1.92×10^{-4}	8.85×10^{-5}	9.93×10^{-4}
Zinc	1.29×10^{-2}	2.19×10^{-2}	1.35×10^{-3}	7.23×10^{-3}	7.38×10^{-4}	2.06×10^{-1}	1.17×10^{-1}	2.58×10^{-2}	4.29×10^{-2}	3.27×10^{-3}	5.64×10^{-3}	5.82×10^{-3}	5.49×10^{-3}	2.06×10^{-1}

newgold Rainy River

NOP1 Station Monitoring Results (concentrations expressed in g/m^2/30 days)				
Metal	**January**	**February**	**March**	**Max**
Aluminum	$2.43x10^{-1}$	$5.34x10^{-1}$	$1.27x10^{-1}$	$5.34x10^{-1}$
Antimony	$4.59x10^{-5}$	$3.78x10^{-5}$	*$1.02x10^{-5}$*	$4.59x10^{-5}$
Arsenic	$6.66x10^{-4}$	$4.35x10^{-4}$	*$4.05x10^{-5}$*	$6.66x10^{-4}$
Barium	$1.48x10^{-3}$	$1.95x10^{-3}$	$6.87x10^{-4}$	$1.95x10^{-3}$
Beryllium	*$1.17x10^{-5}$*	*$1.07x10^{-5}$*	*$1.02x10^{-5}$*	*$1.17x10^{-5}$*
Bismuth	*$1.17x10^{-5}$*	*$1.07x10^{-5}$*	*$1.02x10^{-5}$*	*$1.17x10^{-5}$*
Boron	*$2.40x10^{-4}$*	*$2.10x10^{-4}$*	*$2.10x10^{-4}$*	*$2.40x10^{-4}$*
Cadmium	$7.80x10^{-5}$	$5.73x10^{-5}$	$9.69x10^{-6}$	$7.80x10^{-5}$
Calcium	$4.08x10^{-1}$	1.26	$2.52x10^{-1}$	1.26
Chromium	$3.42x10^{-4}$	$8.28x10^{-4}$	$1.08x10^{-4}$	$8.28x10^{-4}$
Cobalt	$9.12x10^{-5}$	$3.00x10^{-4}$	$1.95x10^{-5}$	$3.00x10^{-4}$
Copper	$1.40x10^{-3}$	$1.43x10^{-3}$	$1.96x10^{-4}$	$1.43x10^{-3}$
Iron	$2.47x10^{-1}$	$7.35x10^{-1}$	$6.66x10^{-2}$	$7.35x10^{-1}$
Lead	$2.68x10^{-3}$	$1.60x10^{-3}$	$5.55x10^{-4}$	$2.68x10^{-3}$
Lithium	$3.48x10^{-4}$	$1.26x10^{-3}$	*$1.02x10^{-4}$*	$1.26x10^{-3}$
Magnesium	$1.08x10^{-1}$	$3.03x10^{-1}$	$4.08x10^{-2}$	$3.03x10^{-1}$
Manganese	$1.54x10^{-2}$	$2.62x10^{-2}$	$4.23x10^{-3}$	$2.62x10^{-2}$
Molybdenum	$2.75x10^{-5}$	$5.40x10^{-5}$	$1.92x10^{-5}$	$5.40x10^{-5}$
Nickel	$2.52x10^{-4}$	$6.93x10^{-4}$	$6.81x10^{-5}$	$6.93x10^{-4}$
Phosphorus	*$4.65x10^{-3}$*	$1.40x10^{-2}$	*$1.02x10^{-3}$*	$1.40x10^{-2}$
Potassium	$7.98x10^{-2}$	$9.48x10^{-2}$	$4.68x10^{-2}$	$9.48x10^{-2}$
Selenium	*$2.40x10^{-5}$*	*$2.10x10^{-5}$*	*$2.10x10^{-5}$*	*$2.40x10^{-5}$*
Silicon	$3.45x10^{-1}$	$7.11x10^{-1}$	$1.96x10^{-1}$	$7.11x10^{-1}$
Silver	$3.72x10^{-5}$	$3.90x10^{-5}$	$7.26x10^{-6}$	$3.90x10^{-5}$
Sodium	$1.64x10^{-2}$	$5.13x10^{-2}$	$1.47x10^{-2}$	$5.13x10^{-2}$
Strontium	$8.94x10^{-4}$	$1.99x10^{-3}$	$7.05x10^{-4}$	$1.99x10^{-3}$
Thallium	*$2.40x10^{-6}$*	*$2.10x10^{-6}$*	*$2.10x10^{-6}$*	*$2.40x10^{-6}$*
Tin	*$2.40x10^{-6}$*	*$6.45x10^{-6}$*	*$2.10x10^{-6}$*	*$6.45x10^{-6}$*
Titanium	$4.20x10^{-3}$	$9.39x10^{-3}$	$2.07x10^{-3}$	$9.39x10^{-3}$
Uranium	$6.75x10^{-6}$	$6.39x10^{-6}$	$3.60x10^{-6}$	$6.75x10^{-6}$
Vanadium	$4.05x10^{-4}$	$1.32x10^{-3}$	$1.59x10^{-4}$	$1.32x10^{-3}$
Zinc	$1.96x10^{-2}$	$1.44x10^{-2}$	$2.35x10^{-3}$	$1.96x10^{-2}$

WCP1 Station Monitoring Results (concentrations expressed in g/m^2/30 days)				
Metal	**January**	**February**	**March**	**Max**
Aluminum	$3.63x10^{-2}$	$5.70x10^{-4}$	$7.62x10^{-2}$	$7.62x10^{-2}$
Antimony	$9.00x10^{-6}$	*$9.30x10^{-6}$*	*$4.95x10^{-6}$*	*$9.30x10^{-6}$*
Arsenic	$5.16x10^{-5}$	*$9.30x10^{-6}$*	*$2.55x10^{-5}$*	$5.16x10^{-5}$
Barium	$1.85x10^{-4}$	$4.80x10^{-6}$	$3.63x10^{-4}$	$3.63x10^{-4}$
Beryllium	*$1.08x10^{-5}$*	*$2.25x10^{-5}$*	*$1.25x10^{-5}$*	*$2.25x10^{-5}$*
Bismuth	*$1.08x10^{-5}$*	*$2.25x10^{-5}$*	*$1.25x10^{-5}$*	*$2.25x10^{-5}$*
Boron	*$2.10x10^{-4}$*	*$4.65x10^{-4}$*	*$2.55x10^{-4}$*	*$4.65x10^{-4}$*
Cadmium	$5.91x10^{-6}$	*$2.25x10^{-6}$*	$1.14x10^{-5}$	$1.14x10^{-5}$
Calcium	$7.08x10^{-2}$	*$1.80x10^{-3}$*	$1.31x10^{-1}$	$1.31x10^{-1}$
Chromium	$4.83x10^{-5}$	*$2.25x10^{-5}$*	$7.62x10^{-5}$	$7.62x10^{-5}$
Cobalt	$1.56x10^{-5}$	*$4.65x10^{-6}$*	$1.80x10^{-5}$	$1.80x10^{-5}$
Copper	$2.93x10^{-4}$	*$2.25x10^{-5}$*	$2.84x10^{-4}$	$2.93x10^{-4}$
Iron	$3.96x10^{-2}$	*$1.40x10^{-3}$*	$5.64x10^{-2}$	$5.64x10^{-2}$
Lead	$2.54x10^{-4}$	*$2.25x10^{-6}$*	$2.29x10^{-4}$	$2.54x10^{-4}$
Lithium	*$1.08x10^{-4}$*	*$2.25x10^{-4}$*	*$1.25x10^{-4}$*	*$2.25x10^{-4}$*
Magnesium	$2.00x10^{-2}$	*$2.25x10^{-4}$*	$3.03x10^{-2}$	$3.03x10^{-2}$
Manganese	$1.75x10^{-3}$	$2.31x10^{-5}$	$3.21x10^{-3}$	$3.21x10^{-3}$
Molybdenum	$5.82x10^{-6}$	*$2.25x10^{-6}$*	$6.33x10^{-6}$	$6.33x10^{-6}$
Nickel	$4.65x10^{-5}$	*$2.25x10^{-5}$*	$5.16x10^{-5}$	$5.16x10^{-5}$
Phosphorus	*$1.08x10^{-3}$*	*$2.25x10^{-3}$*	*$1.25x10^{-3}$*	*$2.25x10^{-3}$*
Potassium	$9.09x10^{-3}$	*$2.25x10^{-3}$*	$2.50x10^{-2}$	$2.50x10^{-2}$
Selenium	*$2.10x10^{-5}$*	*$4.65x10^{-5}$*	*$2.55x10^{-5}$*	*$4.65x10^{-5}$*
Silicon	$5.46x10^{-2}$	*$2.25x10^{-3}$*	$1.14x10^{-1}$	$1.14x10^{-1}$
Silver	$6.09x10^{-6}$	*$4.65x10^{-7}$*	$6.12x10^{-6}$	$6.12x10^{-6}$
Sodium	$4.71x10^{-3}$	*$2.25x10^{-3}$*	$9.12x10^{-3}$	$9.12x10^{-3}$
Strontium	$1.44x10^{-4}$	*$4.65x10^{-6}$*	$3.36x10^{-4}$	$3.36x10^{-4}$
Thallium	*$2.10x10^{-6}$*	*$4.65x10^{-6}$*	*$2.55x10^{-6}$*	*$4.65x10^{-6}$*
Tin	*$2.10x10^{-6}$*	*$4.65x10^{-6}$*	*$2.55x10^{-6}$*	*$4.65x10^{-6}$*
Titanium	$6.00x10^{-4}$	*$4.65x10^{-4}$*	$1.23x10^{-3}$	$1.23x10^{-3}$
Uranium	$6.90x10^{-7}$	*$4.65x10^{-7}$*	*$1.25x10^{-6}$*	$1.25x10^{-6}$
Vanadium	$7.20x10^{-5}$	*$4.65x10^{-5}$*	$1.20x10^{-4}$	$1.20x10^{-4}$
Zinc	$1.54x10^{-3}$	*$1.40x10^{-4}$*	$2.78x10^{-3}$	$2.78x10^{-3}$

GH1 Station Monitoring Results (concentrations expressed in g/m²/30 days)				
Metal	**January**	**February**	**March**	**Max**
Aluminum	$5.31x10^{-2}$	$1.48x10^{-1}$	$1.34x10^{-1}$	$1.48x10^{-1}$
Antimony	$9.00x10^{-6}$	$1.14x10^{-5}$	*$4.05x10^{-6}$*	$1.14x10^{-5}$
Arsenic	$5.73x10^{-5}$	*$6.60x10^{-5}$*	*$3.15x10^{-5}$*	*$6.60x10^{-5}$*
Barium	$2.32x10^{-4}$	$5.37x10^{-4}$	$6.75x10^{-4}$	$6.75x10^{-4}$
Beryllium	*$1.35x10^{-5}$*	*$1.11x10^{-5}$*	*$1.02x10^{-5}$*	*$1.35x10^{-5}$*
Bismuth	*$1.35x10^{-5}$*	*$1.11x10^{-5}$*	*$1.02x10^{-5}$*	*$1.35x10^{-5}$*
Boron	*$2.70x10^{-4}$*	*$2.25x10^{-4}$*	*$2.10x10^{-4}$*	*$2.70x10^{-4}$*
Cadmium	$6.06x10^{-6}$	$7.38x10^{-6}$	$5.82x10^{-6}$	$7.38x10^{-6}$
Calcium	$1.29x10^{-1}$	$4.32x10^{-1}$	$2.00x10^{-1}$	$4.32x10^{-1}$
Chromium	$7.32x10^{-5}$	$1.92x10^{-4}$	$1.56x10^{-4}$	$1.92x10^{-4}$
Cobalt	$2.43x10^{-5}$	$7.53x10^{-5}$	$4.35x10^{-5}$	$7.53x10^{-5}$
Copper	$2.03x10^{-4}$	$3.81x10^{-4}$	$2.37x10^{-4}$	$3.81x10^{-4}$
Iron	$6.30x10^{-2}$	$1.92x10^{-1}$	$1.19x10^{-1}$	$1.92x10^{-1}$
Lead	$3.63x10^{-4}$	$2.00x10^{-4}$	$1.46x10^{-4}$	$3.63x10^{-4}$
Lithium	*$1.35x10^{-4}$*	$3.30x10^{-4}$	*$1.02x10^{-4}$*	$3.30x10^{-4}$
Magnesium	$3.00x10^{-2}$	$8.01x10^{-2}$	$5.76x10^{-2}$	$8.01x10^{-2}$
Manganese	$2.87x10^{-3}$	$6.93x10^{-3}$	$4.14x10^{-3}$	$6.93x10^{-3}$
Molybdenum	$5.64x10^{-6}$	$1.03x10^{-5}$	$1.27x10^{-5}$	$1.27x10^{-5}$
Nickel	$7.74x10^{-5}$	$1.91x10^{-4}$	$1.20x10^{-4}$	$1.91x10^{-4}$
Phosphorus	*$1.35x10^{-3}$*	$2.61x10^{-3}$	*$2.10x10^{-3}$*	$2.61x10^{-3}$
Potassium	$1.06x10^{-2}$	$2.42x10^{-2}$	$3.09x10^{-2}$	$3.09x10^{-2}$
Selenium	*$2.70x10^{-5}$*	*$2.25x10^{-5}$*	*$2.10x10^{-5}$*	*$2.70x10^{-5}$*
Silicon	$7.50x10^{-2}$	$1.88x10^{-1}$	$2.03x10^{-1}$	$2.03x10^{-1}$
Silver	$3.93x10^{-6}$	$5.34x10^{-6}$	$4.29x10^{-6}$	$5.34x10^{-6}$
Sodium	$7.05x10^{-3}$	$1.66x10^{-2}$	$1.78x10^{-2}$	$1.78x10^{-2}$
Strontium	$2.10x10^{-4}$	$6.33x10^{-4}$	$6.06x10^{-4}$	$6.33x10^{-4}$
Thallium	*$2.70x10^{-6}$*	*$2.25x10^{-6}$*	*$2.10x10^{-6}$*	*$2.70x10^{-6}$*
Tin	*$2.70x10^{-6}$*	*$2.25x10^{-6}$*	$4.80x10^{-6}$	$4.80x10^{-6}$
Titanium	$7.80x10^{-4}$	*$1.32x10^{-3}$*	$2.34x10^{-3}$	$2.34x10^{-3}$
Uranium	$8.10x10^{-7}$	$1.98x10^{-6}$	*$2.10x10^{-6}$*	*$2.10x10^{-6}$*
Vanadium	$1.32x10^{-4}$	$3.48x10^{-4}$	$2.43x10^{-4}$	$3.48x10^{-4}$
Zinc	$1.53x10^{-3}$	$2.08x10^{-3}$	$1.57x10^{-3}$	$2.08x10^{-3}$

CP1 Station Monitoring Results (concentrations expressed in g/m²/30 days)				
Metal	**January**	**February**	**March**	**Max**
Aluminum	N/A	$5.64x10^{-2}$	$2.19x10^{-2}$	$5.64x10^{-2}$
Antimony	N/A	$8.70x10^{-6}$	*$4.05x10^{-6}$*	$8.70x10^{-6}$
Arsenic	N/A	*$4.20x10^{-5}$*	*$6.15x10^{-6}$*	*$4.20x10^{-5}$*
Barium	N/A	$3.18x10^{-4}$	$1.70x10^{-4}$	$3.18x10^{-4}$
Beryllium	N/A	*$1.07x10^{-5}$*	*$1.02x10^{-5}$*	*$1.07x10^{-5}$*
Bismuth	N/A	*$1.07x10^{-5}$*	*$1.02x10^{-5}$*	*$1.07x10^{-5}$*
Boron	N/A	*$2.10x10^{-4}$*	*$2.10x10^{-4}$*	*$2.10x10^{-4}$*
Cadmium	N/A	$1.42x10^{-5}$	*$1.02x10^{-6}$*	$1.42x10^{-5}$
Calcium	N/A	$1.18x10^{-1}$	$5.91x10^{-2}$	$1.18x10^{-1}$
Chromium	N/A	$8.28x10^{-5}$	*$1.02x10^{-5}$*	$8.28x10^{-5}$
Cobalt	N/A	$2.28x10^{-5}$	$5.70x10^{-6}$	$2.28x10^{-5}$
Copper	N/A	$6.75x10^{-4}$	$4.50x10^{-5}$	$6.75x10^{-4}$
Iron	N/A	$5.76x10^{-2}$	$1.58x10^{-2}$	$5.76x10^{-2}$
Lead	N/A	$4.32x10^{-4}$	$4.41x10^{-5}$	$4.32x10^{-4}$
Lithium	N/A	*$1.07x10^{-4}$*	*$1.02x10^{-4}$*	*$1.07x10^{-4}$*
Magnesium	N/A	$2.56x10^{-2}$	$1.05x10^{-2}$	$2.56x10^{-2}$
Manganese	N/A	$3.03x10^{-3}$	$1.10x10^{-3}$	$3.03x10^{-3}$
Molybdenum	N/A	$2.37x10^{-5}$	$3.39x10^{-6}$	$2.37x10^{-5}$
Nickel	N/A	$6.45x10^{-5}$	*$1.02x10^{-5}$*	$6.45x10^{-5}$
Phosphorus	N/A	*$1.07x10^{-3}$*	*$1.02x10^{-3}$*	*$1.07x10^{-3}$*
Potassium	N/A	$1.78x10^{-2}$	$8.19x10^{-3}$	$1.78x10^{-2}$
Selenium	N/A	*$2.10x10^{-5}$*	*$2.10x10^{-5}$*	*$2.10x10^{-5}$*
Silicon	N/A	$8.07x10^{-2}$	*$2.70x10^{-2}$*	$8.07x10^{-2}$
Silver	N/A	$4.59x10^{-6}$	$7.80x10^{-7}$	$4.59x10^{-6}$
Sodium	N/A	$7.11x10^{-3}$	$6.57x10^{-3}$	$7.11x10^{-3}$
Strontium	N/A	$2.45x10^{-4}$	$1.56x10^{-4}$	$2.45x10^{-4}$
Thallium	N/A	*$2.10x10^{-6}$*	*$2.10x10^{-6}$*	*$2.10x10^{-6}$*
Tin	N/A	*$2.10x10^{-6}$*	*$2.10x10^{-6}$*	*$2.10x10^{-6}$*
Titanium	N/A	$1.08x10^{-3}$	*$2.10x10^{-4}$*	$1.08x10^{-3}$
Uranium	N/A	$1.02x10^{-6}$	*$1.02x10^{-6}$*	$1.02x10^{-6}$
Vanadium	N/A	$1.05x10^{-4}$	*$2.10x10^{-5}$*	$1.05x10^{-4}$
Zinc	N/A	$4.29x10^{-3}$	$6.45x10^{-4}$	$4.29x10^{-3}$

APPENDIX A-4:

SO_2 AND NO_2 PASSIVE SAMPLING RESULTS

Tait Road Station Monitoring Results (concentrations expressed in µg/m³)		
Month	**SO_2**	**NO_2**
January	0.52	3.76
February	0.52	0.56
March	0.52	0.94
No. Valid Samples	3	3
% Valid data	100%	100%
Arithmetic Mean	0.52	1.76
Max Monthly Concentration	0.52	3.76
Min Monthly Concentration	0.52	0.56
Comparison Limit	30	78
No. > Limit	0	0
MDL	0.26	0.19
No. < MDL	0	0

Gallinger Road Station Monitoring Results (concentrations expressed in µg/m³)		
Month	**SO_2**	**NO_2**
January	0.52	2.82
February	0.52	0.75
March	1.05	0.56
No. Valid Samples	3	3
% Valid data	100%	100%
Arithmetic Mean	0.70	1.38
Max Monthly Concentration	1.05	2.82
Min Monthly Concentration	0.52	0.56
Comparison Limit	30	78
No. > Limit	0	0
MDL	0.26	0.19
No. < MDL	0	0

APPENDIX B:
NOTICE OF EXCEEDANCES FOR Q1 2021

April 14, 2021

Matt Hoffmeister & Jason Tittlemier
Senior Environmental Officers
Ministry of the Environment, Conservation and Parks
808 Robertson St.
Kenora, ON P9N 1X9

Dear Mr. Hoffmeister and Mr. Tittlemier,

SUBJECT: NORTHWEST STATION AMBIENT AIR QUALITY EXCEEDANCE OF 24-HOUR TOTAL SUSPENDED PARTICULATE MONITORING LIMITS

During the review of the first quarter air quality lab results, it was noted that on January 28, 2021, the total suspended particulates (TSP) concentration at the Northwest Ambient Air Quality Monitoring Station had exceeded Ministry approved limits of 120 ug/m^3. On January 28, 2021, the TSP concentration at the Northwest Ambient Air Quality Monitoring Station was 178.9 ug/m^3.

The delay between the date of occurrence and when we became aware of the exceedance, and hence reporting, is due to the wait time for lab results. The following letter report accompanies a copy of the Notification of Exceedance form (NOE) as per ECA #0412-A2LR4V.

The Northwest Ambient Air Quality Monitoring Station is located approximately 400 m due west of the Tailings Management Area (TMA) on the Rainy River Mine Site (Figure 1). Highway 600 itself passes by the Ambient Air Quality Monitoring Station in a north-south direction at approximately 70 meters to the west.

TSP samples were collected during a 24-hr period on January 28, 2021 as per Rainy River Project Ambient Air Quality Monitoring Plan, accepted by MECP on November 9th, 2016. During this 24-hour period, predominant wind direction was from the east to northeast (Figure 2). With these wind directions, the preliminary investigation identified the source of the dust would likely be from the Rainy River Mine Site TMA activities.

Two potential sources of suspended particulate, TMA dam buttressing and geotechnical drilling, were further investigated and deemed to not have caused the TSP exceedance. The dam buttressing was only occurring on the South Dam toe and any dust generated would not have been carried to the northwest station by the wind direction that day. The geotechnical drilling was first thought to be the source but was deemed not likely, due to the drill rig being completely enclosed in insulated tarps to keep the staff safe from the elements.

The Environmental Department's field staff have found cigarette butts within the fenced in Northwest Air Quality Station since the snow has melted and suspect tampering of this unit during run times. Since the discovery of the exceedance, all cigarette butts have been removed, the Northwest Station locked, and a trail camera installed.

New Gold Inc.
Rainy River Mine
5967 HWY 11/71, P.O. Box 5
Emo, ON P0W 1E0

T 807-482-2501
F 807-482-2834
www.newgold.com

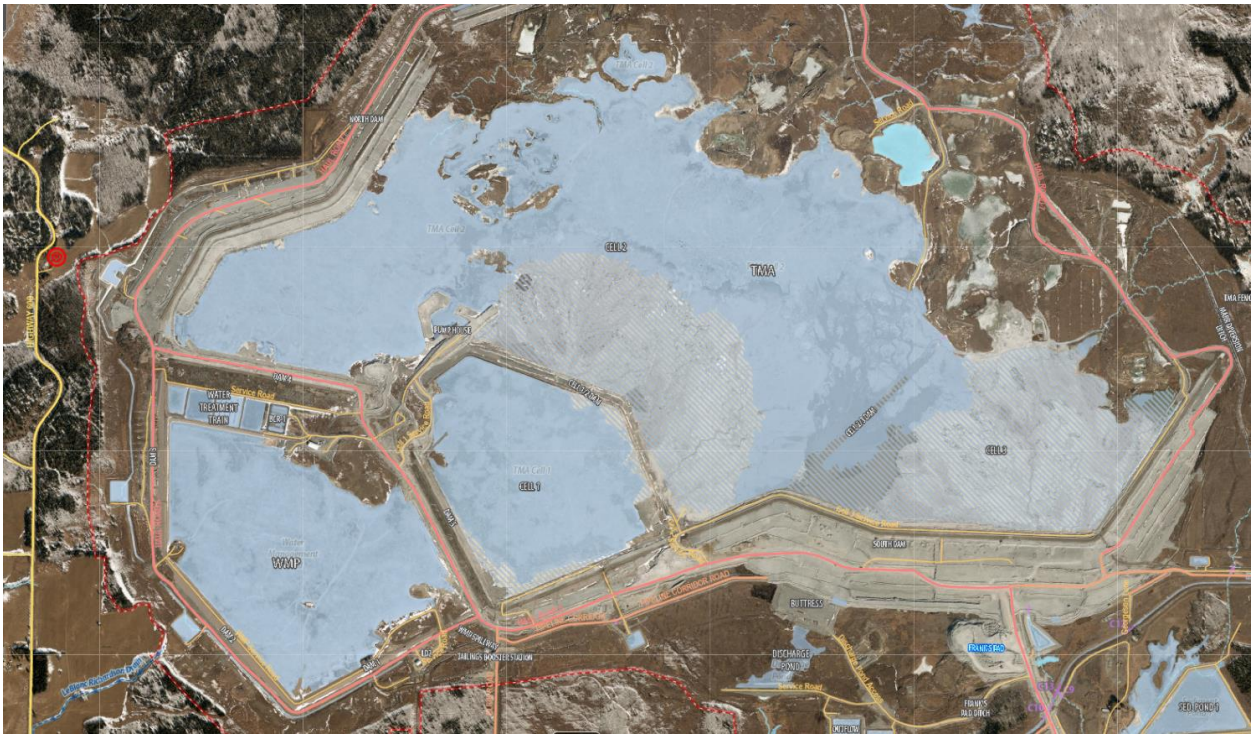

Figure 1: Map of TMA, the Northwest Station is marked with a red target.

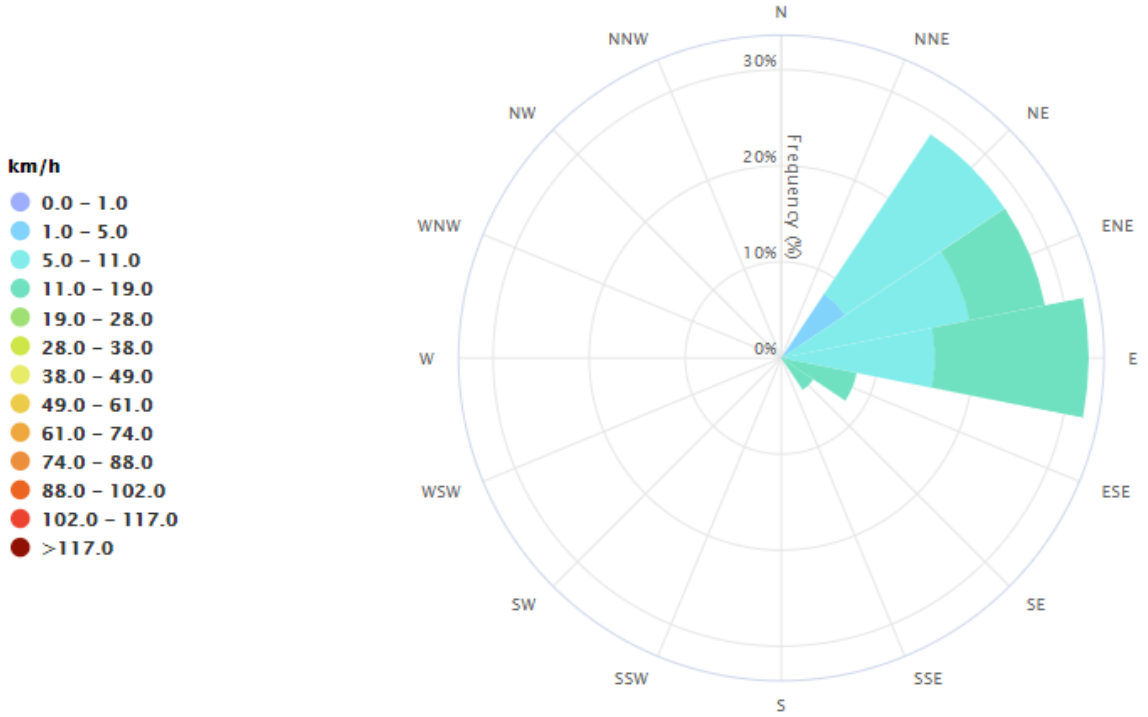

Figure 2: Windrose from January 28, 202 at Barron Weather Station

Once you have had the opportunity to review this document, please contact me at (807) 276-0106 with any questions or concerns.

Regards,

Garnet Cornell
Environment Supervisor

cc. Sylvie St.Jean (sylvie.st.jean@newgold.com)
cc. Carolyn Winik (carolyn.winik@newgold.com)
cc. Sarah Flesher (sarah.flesher@newgold.com)

APPENDIX C:
LABORATORY RESULTS

Report To	Sarah Flesher, New Gold Inc. Rainy River Project 5967 Highway 11/71 P.O. Box 5 Emo, ON P0W 1E0	**Date Received** **Report Date** **Report Revision** **Version**	8-Feb-2021 08:40 4-Mar-2021 09:41 1 FINAL
Client Phone	807-482-0900		

Certificate of Analysis

Lab Work Order #	L2555439
Project P.O. #	4500050093
Job Reference	NEW GOLD RRP
Legal Site Description	
C of C Numbers	

Case Narrative/Comments

Work Order Qualifiers:

Temperature - 10.0ºC °

Claire Kocharakkal, B.Sc.
Account Manager

[This report shall not be reproduced except in full without the written authority of the Laboratory.]

Results Summary L2555439

Job Reference NEW GOLD RRP
Report To Sarah Flesher, New Gold Inc. Rainy River Project
Date Received 8-Feb-2021 8:40
Report Date 4-Mar-2021 9:41
Report Version 1

Client Sample ID			SOUTH-TSP-341	SOUTH-TSP-342	SOUTH-TSP-343	SOUTH-TSP-344	SOUTH-TSP-345	NORTH-TSP-341	NORTH-TSP-342	NORTH-TSP-343	NORTH-TSP-344	NORTH-TSP-345	NORTHWEST-TSP-341	NORTHWEST-TSP-342
Date Sampled			4-Jan-2021 0:00	10-Jan-2021 0:00	16-Jan-2021 0:00	22-Jan-2021 0:00	28-Jan-2021 0:00	4-Jan-2021 0:00	10-Jan-2021 0:00	16-Jan-2021 0:00	22-Jan-2021 0:00	28-Jan-2021 0:00	4-Jan-2021 0:00	10-Jan-2021 0:00
ALS Sample ID			L2555439-1	L2555439-2	L2555439-3	L2555439-4	L2555439-5	L2555439-6	L2555439-7	L2555439-8	L2555439-9	L2555439-10	L2555439-11	L2555439-12
Parameter	Lowest Detection Limit	Units	Filter	Filter	Filter	Filter	Filter	Filter	Filter	Filter	Filter	Filter	Filter	Filter
Particulates (Filter)														
Total particulate	15	ug	4000	6800	10300	24300	14600	29800	25300	10500	20400	14800	4800	8900
Total Metals (Filter)														
Arsenic (As)	3.0	ug	<3.0	<3.0	<3.0	<3.0	<3.0	<3.0	<3.0	<3.0	<3.0	<3.0	<3.0	<3.0
Cadmium (Cd)	2.0	ug	<2.0	<2.0	<2.0	<2.0	<2.0	<2.0	<2.0	<2.0	<2.0	<2.0	<2.0	<2.0
Chromium (Cr)	5.0	ug	<5.0	<5.0	5.2	<5.0	<5.0	<5.0	5.1	<5.0	6.8	5.1	5.1	<5.0
Cobalt (Co)	2.0	ug	<2.0	<2.0	<2.0	<2.0	<2.0	<2.0	<2.0	<2.0	<2.0	<2.0	<2.0	<2.0
Copper (Cu)	4.0	ug	48.2	34.7	82.8	50.4	25.8	73.8	77.9	222	106	67.1	189	144
Iron (Fe)	20	ug	94	81	263	464	261	509	621	253	527	280	106	83
Lead (Pb)	3.0	ug	<3.0	<3.0	<3.0	4.8	<3.0	4.1	3.0	<3.0	<3.0	<3.0	<3.0	<3.0
Manganese (Mn)	1.0	ug	2.9	2.2	8.2	20.5	10.2	19.4	16.8	6.2	15.6	6.7	4.0	2.1
Nickel (Ni)	3.0	ug	<3.0	<3.0	<3.0	<3.0	<3.0	<3.0	3.2	<3.0	3.5	<3.0	<3.0	<3.0
Selenium (Se)	10	ug	<10	<10	<10	<10	<10	<10	<10	<10	<10	<10	<10	<10
Vanadium (V)	5.0	ug	<5.0	<5.0	<5.0	<5.0	<5.0	<5.0	<5.0	<5.0	<5.0	<5.0	<5.0	<5.0
Zinc (Zn)	5.0	ug	11.7	12.0	9.1	31.1	23.2	55.4	23.0	7.7	20.1	9.8	12.7	10.4
Particulates (Dustfall)														
Fixed Dustfall	0.10	mg/dm2.day												
Volatile Dustfall	0.10	mg/dm2.day												
Total Dustfall	0.10	mg/dm2.day												
Fixed Insoluble Dustfall	0.10	mg/dm2.day												
Volatile Insoluble Dustfall	0.10	mg/dm2.day												
Total Insoluble Dustfall	0.10	mg/dm2.day												
Fixed Soluble Dustfall	0.10	mg/dm2.day												
Volatile Soluble Dustfall	0.10	mg/dm2.day												
Total Soluble Dustfall	0.10	mg/dm2.day												
Metals (Dustfall)														
Aluminum (Al)-Total	0.000043	mg/dm2.day												
Antimony (Sb)-Total	0.0000014	mg/dm2.day												
Arsenic (As)-Total	0.0000014	mg/dm2.day												
Barium (Ba)-Total	0.00000072	mg/dm2.day												
Beryllium (Be)-Total	0.0000072	mg/dm2.day												
Bismuth (Bi)-Total	0.0000072	mg/dm2.day												
Boron (B)-Total	0.00014	mg/dm2.day												
Cadmium (Cd)-Total	0.00000072	mg/dm2.day												
Calcium (Ca)-Total	0.00029	mg/dm2.day												
Chromium (Cr)-Total	0.0000072	mg/dm2.day												
Cobalt (Co)-Total	0.0000014	mg/dm2.day												
Copper (Cu)-Total	0.0000072	mg/dm2.day												
Iron (Fe)-Total	0.00043	mg/dm2.day												
Lead (Pb)-Total	0.00000072	mg/dm2.day												
Lithium (Li)-Total	0.000072	mg/dm2.day												
Magnesium (Mg)-Total	0.000072	mg/dm2.day												
Manganese (Mn)-Total	0.0000014	mg/dm2.day												
Molybdenum (Mo)-Total	0.00000072	mg/dm2.day												
Nickel (Ni)-Total	0.0000072	mg/dm2.day												

Results Summary L2555439

Job Reference NEW GOLD RRP
Report To Sarah Flesher, New Gold Inc. Rainy River Proj
Date Received 8-Feb-2021 8:40
Report Date 4-Mar-2021 9:41
Report Version 1

Client Sample ID			NORTHWEST-TSP-343	NORTHWEST-TSP-344	NORTHWEST-TSP-345	TRAVEL BLANK TSP	SOUTH-PM2.5-341	SOUTH-PM2.5-342	SOUTH-PM2.5-343	SOUTH-PM2.5-344	SOUTH-PM2.5-345	NORTH-PM2.5-341	NORTH-PM2.5-342
Date Sampled			16-Jan-2021	22-Jan-2021	28-Jan-2021	2-Feb-2021	4-Jan-2021	10-Jan-2021	16-Jan-2021	22-Jan-2021	28-Jan-2021	4-Jan-2021	10-Jan-2021
Time Sampled			0:00	0:00	0:00	0:00	0:00	0:00	0:00	0:00	0:00	0:00	0:00
ALS Sample ID			L2555439-13	L2555439-14	L2555439-15	L2555439-16	L2555439-17	L2555439-18	L2555439-19	L2555439-20	L2555439-21	L2555439-22	L2555439-23
Parameter	Lowest Detection Limit	Units	Filter	Filter	Filter	Filter	Filter	Filter	Filter	Filter	Filter	Filter	Filter
Particulates (Filter)													
Total particulate	15	ug	5500	5200	306000	<2300	<15	92	31	16	54	<15	68
Total Metals (Filter)													
Arsenic (As)	3.0	ug	<3.0	<3.0	7.5	<3.0							
Cadmium (Cd)	2.0	ug	<2.0	<2.0	<2.0	<2.0							
Chromium (Cr)	5.0	ug	<5.0	5.4	8.4	5.2							
Cobalt (Co)	2.0	ug	<2.0	<2.0	2.3	<2.0							
Copper (Cu)	4.0	ug	285	405	161	<4.0							
Iron (Fe)	20	ug	136	155	3780	61							
Lead (Pb)	3.0	ug	<3.0	<3.0	81.9	<3.0							
Manganese (Mn)	1.0	ug	3.6	3.9	253	1.5							
Nickel (Ni)	3.0	ug	3.4	<3.0	5.3	<3.0							
Selenium (Se)	10	ug	<10	<10	<10	<10							
Vanadium (V)	5.0	ug	<5.0	<5.0	5.6	<5.0							
Zinc (Zn)	5.0	ug	12.7	7.3	221	<5.0							
Particulates (Dustfall)													
Fixed Dustfall	0.10	mg/dm2.day											
Volatile Dustfall	0.10	mg/dm2.day											
Total Dustfall	0.10	mg/dm2.day											
Fixed Insoluble Dustfall	0.10	mg/dm2.day											
Volatile Insoluble Dustfall	0.10	mg/dm2.day											
Total Insoluble Dustfall	0.10	mg/dm2.day											
Fixed Soluble Dustfall	0.10	mg/dm2.day											
Volatile Soluble Dustfall	0.10	mg/dm2.day											
Total Soluble Dustfall	0.10	mg/dm2.day											
Metals (Dustfall)													
Aluminum (Al)-Total	0.000043	mg/dm2.day											
Antimony (Sb)-Total	0.0000014	mg/dm2.day											
Arsenic (As)-Total	0.0000014	mg/dm2.day											
Barium (Ba)-Total	0.00000072	mg/dm2.day											
Beryllium (Be)-Total	0.0000072	mg/dm2.day											
Bismuth (Bi)-Total	0.0000072	mg/dm2.day											
Boron (B)-Total	0.00014	mg/dm2.day											
Cadmium (Cd)-Total	0.00000072	mg/dm2.day											
Calcium (Ca)-Total	0.00029	mg/dm2.day											
Chromium (Cr)-Total	0.0000072	mg/dm2.day											
Cobalt (Co)-Total	0.0000014	mg/dm2.day											
Copper (Cu)-Total	0.0000072	mg/dm2.day											
Iron (Fe)-Total	0.00043	mg/dm2.day											
Lead (Pb)-Total	0.00000072	mg/dm2.day											
Lithium (Li)-Total	0.000072	mg/dm2.day											
Magnesium (Mg)-Total	0.000072	mg/dm2.day											
Manganese (Mn)-Total	0.0000014	mg/dm2.day											
Molybdenum (Mo)-Total	0.00000072	mg/dm2.day											
Nickel (Ni)-Total	0.0000072	mg/dm2.day											

Results Summary L2555439

Job Reference NEW GOLD RRP
Report To Sarah Flesher, New Gold Inc. Rainy River Proj
Date Received 8-Feb-2021 8:40
Report Date 4-Mar-2021 9:41
Report Version 1

Client Sample ID			NORTH-PM2.5-343	NORTH-PM2.5-344	NORTH-PM2.5-345	NORTHWEST-PM2.5-341	NORTHWEST-PM2.5-342	NORTHWEST-PM2.5-343	NORTHWEST-PM2.5-344	NORTHWEST-PM2.5-345	TRAVEL BLANK PM2.5	NOP1-DUSTFALL-1	SPP1-DUSTFALL-8	WCD1-DUSTFALL-1
Date Sampled			16-Jan-2021	22-Jan-2021	28-Jan-2021	4-Jan-2021	10-Jan-2021	16-Jan-2021	22-Jan-2021	28-Jan-2021	2-Feb-2021	2-Feb-2021	3-Feb-2021	2-Feb-2021
Time Sampled			0:00	0:00	0:00	0:00	0:00	0:00	0:00	0:00	0:00	0:00	0:00	0:00
ALS Sample ID			L2555439-24	L2555439-25	L2555439-26	L2555439-27	L2555439-28	L2555439-29	L2555439-30	L2555439-31	L2555439-32	L2555439-33	L2555439-34	L2555439-35
Parameter	Lowest Detection Limit	Units	Filter	Filter	Filter	Filter	Filter	Filter	Filter	Filter	Filter	Dustfall	Dustfall	Dustfall
Particulates (Filter)														
Total particulate	15	ug	148	<15	41	<15	118	<15	127	82	19			
Total Metals (Filter)														
Arsenic (As)	3.0	ug												
Cadmium (Cd)	2.0	ug												
Chromium (Cr)	5.0	ug												
Cobalt (Co)	2.0	ug												
Copper (Cu)	4.0	ug												
Iron (Fe)	20	ug												
Lead (Pb)	3.0	ug												
Manganese (Mn)	1.0	ug												
Nickel (Ni)	3.0	ug												
Selenium (Se)	10	ug												
Vanadium (V)	5.0	ug												
Zinc (Zn)	5.0	ug												
Particulates (Dustfall)														
Fixed Dustfall	0.10	mg/dm2.day										6.13	0.24	0.68
Volatile Dustfall	0.10	mg/dm2.day										<0.10	<0.10	<0.10
Total Dustfall	0.10	mg/dm2.day										6.13	0.24	0.68
Fixed Insoluble Dustfall	0.10	mg/dm2.day										5.85	0.23	0.63
Volatile Insoluble Dustfall	0.10	mg/dm2.day										<0.10	<0.10	<0.10
Total Insoluble Dustfall	0.10	mg/dm2.day										5.85	0.23	0.63
Fixed Soluble Dustfall	0.10	mg/dm2.day										0.29	<0.10	<0.10
Volatile Soluble Dustfall	0.10	mg/dm2.day										<0.10	<0.10	<0.10
Total Soluble Dustfall	0.10	mg/dm2.day										0.29	<0.10	<0.10
Metals (Dustfall)														
Aluminum (Al)-Total	0.000043	mg/dm2.day										0.0810	0.00356	0.0121
Antimony (Sb)-Total	0.0000014	mg/dm2.day										0.0000153	<0.0000017	0.0000030
Arsenic (As)-Total	0.0000014	mg/dm2.day										0.000222	0.0000051	0.0000172
Barium (Ba)-Total	0.00000072	mg/dm2.day										0.000494	0.0000279	0.0000616
Beryllium (Be)-Total	0.0000072	mg/dm2.day										<0.0000078	<0.0000087	<0.0000072
Bismuth (Bi)-Total	0.0000072	mg/dm2.day										<0.0000078	<0.0000087	<0.0000072
Boron (B)-Total	0.00014	mg/dm2.day										<0.00016	<0.00017	<0.00014
Cadmium (Cd)-Total	0.00000072	mg/dm2.day										0.0000260	0.00000087	0.00000197
Calcium (Ca)-Total	0.00029	mg/dm2.day										0.136	0.00488	0.0236
Chromium (Cr)-Total	0.0000072	mg/dm2.day										0.000114	<0.0000087	0.0000161
Cobalt (Co)-Total	0.0000014	mg/dm2.day										0.0000304	<0.0000017	0.0000052
Copper (Cu)-Total	0.0000072	mg/dm2.day										0.000467	0.0000424	0.0000975
Iron (Fe)-Total	0.00043	mg/dm2.day										0.0823	0.00379	0.0132
Lead (Pb)-Total	0.00000072	mg/dm2.day										0.000894	0.0000617	0.0000845
Lithium (Li)-Total	0.000072	mg/dm2.day										0.000116	<0.000087	<0.000072
Magnesium (Mg)-Total	0.000072	mg/dm2.day										0.0360	0.00152	0.00666
Manganese (Mn)-Total	0.0000014	mg/dm2.day										0.00512	0.000171	0.000582
Molybdenum (Mo)-Total	0.00000072	mg/dm2.day										0.00000916	<0.00000087	0.00000194
Nickel (Ni)-Total	0.0000072	mg/dm2.day										0.0000839	<0.0000087	0.0000155

Results Summary L2555439

Job Reference NEW GOLD RRP
Report To Sarah Flesher, New Gold Inc. Rainy River Proj
Date Received 8-Feb-2021 8:40
Report Date 4-Mar-2021 9:41
Report Version 1

Client Sample ID			GH1-DUSTFALL-1	SPP1-DUSTFALL-4	SPP1-DUSTFALL-5	SPP1-DUSTFALL-6	SPP1-DUSTFALL-7	DUSTFALL-GALLINGER ROAD	DUSTFALL-TAIT ROAD (SOUTH)
Date Sampled			3-Feb-2021	6-Jan-2021	13-Jan-2021	20-Jan-2021	27-Jan-2021	2-Feb-2021	2-Feb-2021
Time Sampled			0:00	0:00	0:00	0:00	0:00	0:00	0:00
ALS Sample ID			L2555439-36	L2555439-37	L2555439-38	L2555439-39	L2555439-40	L2555439-41	L2555439-42
Parameter	Lowest Detection Limit	Units	Dustfall	Dustfall	Dustfall	Dustfall	Dustfall	Dustfall	Dustfall
Particulates (Filter)									
Total particulate	15	ug							
Total Metals (Filter)									
Arsenic (As)	3.0	ug							
Cadmium (Cd)	2.0	ug							
Chromium (Cr)	5.0	ug							
Cobalt (Co)	2.0	ug							
Copper (Cu)	4.0	ug							
Iron (Fe)	20	ug							
Lead (Pb)	3.0	ug							
Manganese (Mn)	1.0	ug							
Nickel (Ni)	3.0	ug							
Selenium (Se)	10	ug							
Vanadium (V)	5.0	ug							
Zinc (Zn)	5.0	ug							
Particulates (Dustfall)									
Fixed Dustfall	0.10	mg/dm2.day	0.97	5.50	6.21	1.05	1.84	0.28	<0.10
Volatile Dustfall	0.10	mg/dm2.day	<0.10	<0.43	<0.43	<0.43	<0.43	<0.10	<0.10
Total Dustfall	0.10	mg/dm2.day	0.97	5.50	6.21	1.05	1.84	0.28	<0.10
Fixed Insoluble Dustfall	0.10	mg/dm2.day	0.83	4.98	5.81	0.91	1.73	0.25	<0.10
Volatile Insoluble Dustfall	0.10	mg/dm2.day	<0.10	<0.43	<0.43	<0.43	<0.43	<0.10	<0.10
Total Insoluble Dustfall	0.10	mg/dm2.day	0.83	4.98	5.81	0.91	1.73	0.25	<0.10
Fixed Soluble Dustfall	0.10	mg/dm2.day	0.15	0.52	<0.43	<0.43	<0.43	<0.10	<0.10
Volatile Soluble Dustfall	0.10	mg/dm2.day	<0.10	<0.43	<0.43	<0.43	<0.43	<0.10	<0.10
Total Soluble Dustfall	0.10	mg/dm2.day	0.15	0.52	<0.43	<0.43	<0.43	<0.10	<0.10
Metals (Dustfall)									
Aluminum (Al)-Total	0.000043	mg/dm2.day	0.0177	0.0650	0.0846	0.0211	0.0368	0.00555	0.00133
Antimony (Sb)-Total	0.0000014	mg/dm2.day	0.0000030	0.0000176	0.0000136	<0.0000057	0.0000147	0.0000032	<0.0000023
Arsenic (As)-Total	0.0000014	mg/dm2.day	0.0000191	0.000177	0.000236	0.0000158	0.0000557	0.0000064	<0.0000023
Barium (Ba)-Total	0.00000072	mg/dm2.day	0.0000773	0.000278	0.000361	0.000118	0.000172	0.0000334	0.0000068
Beryllium (Be)-Total	0.0000072	mg/dm2.day	<0.0000090	<0.000039	<0.000028	<0.000028	<0.000028	<0.0000096	<0.000011
Bismuth (Bi)-Total	0.0000072	mg/dm2.day	<0.0000090	<0.000039	<0.000028	<0.000028	<0.000028	<0.0000096	<0.000011
Boron (B)-Total	0.00014	mg/dm2.day	<0.00018	<0.00077	<0.00057	<0.00057	<0.00057	<0.00019	<0.00023
Cadmium (Cd)-Total	0.00000072	mg/dm2.day	0.00000202	0.0000185	0.0000305	<0.0000028	0.0000096	<0.00000096	<0.0000011
Calcium (Ca)-Total	0.00029	mg/dm2.day	0.0429	0.106	0.124	0.0459	0.0340	0.0108	0.00270
Chromium (Cr)-Total	0.0000072	mg/dm2.day	0.0000244	0.000055	0.000098	0.000038	0.000032	<0.0000096	<0.000011
Cobalt (Co)-Total	0.0000014	mg/dm2.day	0.0000081	0.0000163	0.0000305	0.0000086	0.0000105	0.0000024	<0.0000023
Copper (Cu)-Total	0.0000072	mg/dm2.day	0.0000676	0.00122	0.000610	0.000112	0.000570	0.0000544	0.000012
Iron (Fe)-Total	0.00043	mg/dm2.day	0.0210	0.0642	0.0992	0.0228	0.0383	0.00643	0.00159
Lead (Pb)-Total	0.00000072	mg/dm2.day	0.000121	0.000905	0.000386	0.0000280	0.000429	0.0000181	0.0000081
Lithium (Li)-Total	0.000072	mg/dm2.day	<0.000090	<0.00039	<0.00028	<0.00028	<0.00028	<0.000096	<0.00011
Magnesium (Mg)-Total	0.000072	mg/dm2.day	0.00999	0.0326	0.0408	0.0107	0.0149	0.00295	0.00070
Manganese (Mn)-Total	0.0000014	mg/dm2.day	0.000957	0.00441	0.00388	0.000800	0.00179	0.000215	0.0000628
Molybdenum (Mo)-Total	0.00000072	mg/dm2.day	0.00000188	0.0000094	0.0000078	0.0000039	0.0000045	0.00000113	<0.0000011
Nickel (Ni)-Total	0.0000072	mg/dm2.day	0.0000258	<0.000039	0.000078	0.000033	<0.000028	0.0000140	<0.000011

Results Summary L2555439

Job Reference NEW GOLD RRP
Report To Sarah Flesher, New Gold Inc. Rainy River Project
Date Received 8-Feb-2021 8:40
Report Date 4-Mar-2021 9:41
Report Version 1

Client Sample ID			SOUTH-TSP-341	SOUTH-TSP-342	SOUTH-TSP-343	SOUTH-TSP-344	SOUTH-TSP-345	NORTH-TSP-341	NORTH-TSP-342	NORTH-TSP-343	NORTH-TSP-344	NORTH-TSP-345	NORTHWEST-TSP-341	NORTHWEST-TSP-342
Date Sampled			4-Jan-2021	10-Jan-2021	16-Jan-2021	22-Jan-2021	28-Jan-2021	4-Jan-2021	10-Jan-2021	16-Jan-2021	22-Jan-2021	28-Jan-2021	4-Jan-2021	10-Jan-2021
Time Sampled			0:00	0:00	0:00	0:00	0:00	0:00	0:00	0:00	0:00	0:00	0:00	0:00
ALS Sample ID			L2555439-1	L2555439-2	L2555439-3	L2555439-4	L2555439-5	L2555439-6	L2555439-7	L2555439-8	L2555439-9	L2555439-10	L2555439-11	L2555439-12
Parameter	Lowest Detection Limit	Units	Filter	Filter	Filter	Filter	Filter	Filter	Filter	Filter	Filter	Filter	Filter	Filter
Phosphorus (P)-Total	0.00072	mg/dm2.day												
Potassium (K)-Total	0.00072	mg/dm2.day												
Selenium (Se)-Total	0.000014	mg/dm2.day												
Silicon (Si)-Total	0.00072	mg/dm2.day												
Silver (Ag)-Total	0.00000014	mg/dm2.day												
Sodium (Na)-Total	0.00072	mg/dm2.day												
Strontium (Sr)-Total	0.0000014	mg/dm2.day												
Thallium (Tl)-Total	0.0000014	mg/dm2.day												
Tin (Sn)-Total	0.0000014	mg/dm2.day												
Titanium (Ti)-Total	0.00014	mg/dm2.day												
Uranium (U)-Total	0.00000014	mg/dm2.day												
Vanadium (V)-Total	0.000014	mg/dm2.day												
Zinc (Zn)-Total	0.000043	mg/dm2.day												

Qualifier Legend

DLB Detection Limit Raised. Analyte detected at comparable level in Method Blank.

Results Summary L2555439

Job Reference NEW GOLD RRP
Report To Sarah Flesher, New Gold Inc. Rainy River Proj
Date Received 8-Feb-2021 8:40
Report Date 4-Mar-2021 9:41
Report Version 1

Client Sample ID			NORTHWEST-TSP-343	NORTHWEST-TSP-344	NORTHWEST-TSP-345	TRAVEL BLANK TSP	SOUTH-PM2.5-341	SOUTH-PM2.5-342	SOUTH-PM2.5-343	SOUTH-PM2.5-344	SOUTH-PM2.5-345	NORTH-PM2.5-341	NORTH-PM2.5-342
Date Sampled			16-Jan-2021	22-Jan-2021	28-Jan-2021	2-Feb-2021	4-Jan-2021	10-Jan-2021	16-Jan-2021	22-Jan-2021	28-Jan-2021	4-Jan-2021	10-Jan-2021
Time Sampled			0:00	0:00	0:00	0:00	0:00	0:00	0:00	0:00	0:00	0:00	0:00
ALS Sample ID			L2555439-13	L2555439-14	L2555439-15	L2555439-16	L2555439-17	L2555439-18	L2555439-19	L2555439-20	L2555439-21	L2555439-22	L2555439-23
Parameter	Lowest Detection Limit	Units	Filter	Filter	Filter	Filter	Filter	Filter	Filter	Filter	Filter	Filter	Filter
Phosphorus (P)-Total	0.00072	mg/dm2.day											
Potassium (K)-Total	0.00072	mg/dm2.day											
Selenium (Se)-Total	0.000014	mg/dm2.day											
Silicon (Si)-Total	0.00072	mg/dm2.day											
Silver (Ag)-Total	0.00000014	mg/dm2.day											
Sodium (Na)-Total	0.00072	mg/dm2.day											
Strontium (Sr)-Total	0.0000014	mg/dm2.day											
Thallium (Tl)-Total	0.0000014	mg/dm2.day											
Tin (Sn)-Total	0.0000014	mg/dm2.day											
Titanium (Ti)-Total	0.00014	mg/dm2.day											
Uranium (U)-Total	0.00000014	mg/dm2.day											
Vanadium (V)-Total	0.000014	mg/dm2.day											
Zinc (Zn)-Total	0.000043	mg/dm2.day											

Qualifier Legend
DLB Detection Limit Raised. Analyte detected at cc

Results Summary L2555439

Job Reference NEW GOLD RRP
Report To Sarah Flesher, New Gold Inc. Rainy River Proj
Date Received 8-Feb-2021 8:40
Report Date 4-Mar-2021 9:41
Report Version 1

Client Sample ID			NORTH-PM2.5-343	NORTH-PM2.5-344	NORTH-PM2.5-345	NORTHWEST-PM2.5-341	NORTHWEST-PM2.5-342	NORTHWEST-PM2.5-343	NORTHWEST-PM2.5-344	NORTHWEST-PM2.5-345	TRAVEL BLANK PM2.5	NOP1-DUSTFALL-1	SPP1-DUSTFALL-8	WCD1-DUSTFALL-1
Date Sampled			16-Jan-2021	22-Jan-2021	28-Jan-2021	4-Jan-2021	10-Jan-2021	16-Jan-2021	22-Jan-2021	28-Jan-2021	2-Feb-2021	2-Feb-2021	3-Feb-2021	2-Feb-2021
Time Sampled			0:00	0:00	0:00	0:00	0:00	0:00	0:00	0:00	0:00	0:00	0:00	0:00
ALS Sample ID			L2555439-24	L2555439-25	L2555439-26	L2555439-27	L2555439-28	L2555439-29	L2555439-30	L2555439-31	L2555439-32	L2555439-33	L2555439-34	L2555439-35
Parameter	Lowest Detection Limit	Units	Filter	Filter	Filter	Filter	Filter	Filter	Filter	Filter	Filter	Dustfall	Dustfall	Dustfall
Phosphorus (P)-Total	0.00072	mg/dm2.day										<0.0031	<0.00087	<0.00072
Potassium (K)-Total	0.00072	mg/dm2.day										0.0266	0.00152	0.00303
Selenium (Se)-Total	0.000014	mg/dm2.day										<0.000016	<0.000017	<0.000014
Silicon (Si)-Total	0.00072	mg/dm2.day										0.115	0.00396	0.0182
Silver (Ag)-Total	0.00000014	mg/dm2.day										0.0000124	0.00000076	0.00000203
Sodium (Na)-Total	0.00072	mg/dm2.day										0.00548	0.00147	0.00157
Strontium (Sr)-Total	0.0000014	mg/dm2.day										0.000298	0.0000174	0.0000479
Thallium (Tl)-Total	0.0000014	mg/dm2.day										<0.0000016	<0.0000017	<0.0000014
Tin (Sn)-Total	0.0000014	mg/dm2.day										<0.0000016	<0.0000017	<0.0000014
Titanium (Ti)-Total	0.00014	mg/dm2.day										0.00140	<0.00017	0.00020
Uranium (U)-Total	0.00000014	mg/dm2.day										0.00000225	<0.00000017	0.00000023
Vanadium (V)-Total	0.000014	mg/dm2.day										0.000135	<0.000017	0.000024
Zinc (Zn)-Total	0.000043	mg/dm2.day										0.00653	0.000246	0.000512

Qualifier Legend
DLB Detection Limit Raised. Analyte detected at cc

Results Summary L2555439

Job Reference NEW GOLD RRP
Report To Sarah Flesher, New Gold Inc. Rainy River Proj
Date Received 8-Feb-2021 8:40
Report Date 4-Mar-2021 9:41
Report Version 1

Client Sample ID			GH1-DUSTFALL-1	SPP1-DUSTFALL-4	SPP1-DUSTFALL-5	SPP1-DUSTFALL-6	SPP1-DUSTFALL-7	DUSTFALL-GALLINGER ROAD	DUSTFALL-TAIT ROAD (SOUTH)
Date Sampled			3-Feb-2021	6-Jan-2021	13-Jan-2021	20-Jan-2021	27-Jan-2021	2-Feb-2021	2-Feb-2021
Time Sampled			0:00	0:00	0:00	0:00	0:00	0:00	0:00
ALS Sample ID			L2555439-36	L2555439-37	L2555439-38	L2555439-39	L2555439-40	L2555439-41	L2555439-42
Parameter	Lowest Detection Limit	Units	Dustfall	Dustfall	Dustfall	Dustfall	Dustfall	Dustfall	Dustfall
Phosphorus (P)-Total	0.00072	mg/dm2.day	<0.00090	<0.0039	<0.0057	<0.0028	<0.0028	<0.00096	<0.0011
Potassium (K)-Total	0.00072	mg/dm2.day	0.00352	0.0174	0.0177	0.0048	0.0086	0.00122	<0.0011
Selenium (Se)-Total	0.000014	mg/dm2.day	<0.000018	<0.000077	<0.000057	<0.000057	<0.000057	<0.000019	<0.000023
Silicon (Si)-Total	0.00072	mg/dm2.day	0.0250	0.0846	0.128	0.0307	0.0517	0.00796	0.0027
Silver (Ag)-Total	0.00000014	mg/dm2.day	0.00000131	0.0000427	0.0000182	0.00000127	0.0000105	0.00000068	<0.00000023
Sodium (Na)-Total	0.00072	mg/dm2.day	0.00235	0.0060	0.0073	0.0046	0.0030	0.00173	<0.0011
Strontium (Sr)-Total	0.0000014	mg/dm2.day	0.0000699	0.000206	0.000304	0.0000963	0.000120	0.0000249	0.0000055
Thallium (Tl)-Total	0.0000014	mg/dm2.day	<0.0000018	<0.0000077	<0.0000057	<0.0000057	<0.0000057	<0.0000019	<0.0000023
Tin (Sn)-Total	0.0000014	mg/dm2.day	<0.0000018	<0.0000077	<0.0000057	<0.0000057	<0.0000057	<0.0000019	<0.0000023
Titanium (Ti)-Total	0.00014	mg/dm2.day	0.00026	0.00084	0.00139	<0.00057	<0.00057	<0.00019	<0.00023
Uranium (U)-Total	0.00000014	mg/dm2.day	0.00000027	0.00000142	0.00000169	<0.00000057	0.00000103	<0.00000019	<0.00000023
Vanadium (V)-Total	0.000014	mg/dm2.day	0.000044	<0.000077	0.000135	<0.000057	<0.000057	<0.000019	<0.000023
Zinc (Zn)-Total	0.000043	mg/dm2.day	0.000510	0.00429	0.00730	0.00045	0.00241	0.000156	0.000088

Qualifier Legend
DLB Detection Limit Raised. Analyte detected at cc

Quality Control L2555439

Job Reference NEW GOLD RRP
Report To Sarah Flesher, New Gold Inc. Rainy River Project
Date Received 8-Feb-2021 8:40
Report Date 4-Mar-2021 9:41
Report Version 1

QC Type	Analyte	QC Lot #	ALS QC ID	Result	Target	Units	%	Limit	Units	Qual	Eval	Matrix	Class
Total Metals (Filter)													
LCS	Arsenic (As)	1440142	WG3491684-2	45.0	45	ug	100.0	80-120	%		✓	Filter	Total Metals
LCS	Cadmium (Cd)	1440142	WG3491684-2	22.9	22.5	ug	101.8	80-120	%		✓	Filter	Total Metals
LCS	Chromium (Cr)	1440142	WG3491684-2	43.6	45	ug	96.8	80-120	%		✓	Filter	Total Metals
LCS	Cobalt (Co)	1440142	WG3491684-2	44.1	45	ug	97.9	80-120	%		✓	Filter	Total Metals
LCS	Copper (Cu)	1440142	WG3491684-2	45.9	45	ug	102.0	80-120	%		✓	Filter	Total Metals
LCS	Iron (Fe)	1440142	WG3491684-2	239	225	ug	106.2	80-120	%		✓	Filter	Total Metals
LCS	Lead (Pb)	1440142	WG3491684-2	44.3	45	ug	98.4	80-120	%		✓	Filter	Total Metals
LCS	Manganese (Mn)	1440142	WG3491684-2	44.7	45	ug	99.4	80-120	%		✓	Filter	Total Metals
LCS	Nickel (Ni)	1440142	WG3491684-2	44.5	45	ug	98.9	80-120	%		✓	Filter	Total Metals
LCS	Selenium (Se)	1440142	WG3491684-2	48.6	45	ug	108.0	80-120	%		✓	Filter	Total Metals
LCS	Vanadium (V)	1440142	WG3491684-2	44.4	45	ug	98.6	80-120	%		✓	Filter	Total Metals
LCS	Zinc (Zn)	1440142	WG3491684-2	90.9	90	ug	101.0	80-120	%		✓	Filter	Total Metals
Particulates (Filter)													
MB	Total particulate	1439599	WG3490983-1	<100		ug	-	<100	ug		✓	Filter	Particulates
MB	Total particulate	1443073	WG3495480-1	<15		ug	-	<15	ug		✓	Filter	Particulates
MB	Total particulate	1443073	WG3495480-2	<15		ug	-	<15	ug		✓	Filter	Particulates
Total Metals (Filter)													
MB	Arsenic (As)	1440142	WG3491684-1	<3.0		ug	-	<3.0	ug		✓	Filter	Total Metals
MB	Cadmium (Cd)	1440142	WG3491684-1	<0.027		ug	-	<0.027	ug		✓	Filter	Total Metals
MB	Chromium (Cr)	1440142	WG3491684-1	<3.4		ug	-	<3.4	ug		✓	Filter	Total Metals
MB	Cobalt (Co)	1440142	WG3491684-1	<0.030		ug	-	<0.030	ug		✓	Filter	Total Metals
MB	Copper (Cu)	1440142	WG3491684-1	<1.0		ug	-	<1.0	ug		✓	Filter	Total Metals
MB	Iron (Fe)	1440142	WG3491684-1	<12		ug	-	<12	ug		✓	Filter	Total Metals
MB	Lead (Pb)	1440142	WG3491684-1	<0.12		ug	-	<0.12	ug		✓	Filter	Total Metals
MB	Manganese (Mn)	1440142	WG3491684-1	<0.45		ug	-	<0.45	ug		✓	Filter	Total Metals
MB	Nickel (Ni)	1440142	WG3491684-1	<0.25		ug	-	<0.25	ug		✓	Filter	Total Metals
MB	Selenium (Se)	1440142	WG3491684-1	<1.3		ug	-	<1.3	ug		✓	Filter	Total Metals
MB	Vanadium (V)	1440142	WG3491684-1	<5.0		ug	-	<10.0	ug		✓	Filter	Total Metals
MB	Zinc (Zn)	1440142	WG3491684-1	<4.5		ug	-	<4.5	ug		✓	Filter	Total Metals
MS	Arsenic (As)	1440142	SOUTH-TSP-341	44.5	45.5	ug	97.8	75-125	%		✓	Filter	Total Metals
MS	Cadmium (Cd)	1440142	SOUTH-TSP-341	22.7	22.6	ug	100.3	75-125	%		✓	Filter	Total Metals
MS	Chromium (Cr)	1440142	SOUTH-TSP-341	47.3	49	ug	96.1	75-125	%		✓	Filter	Total Metals
MS	Cobalt (Co)	1440142	SOUTH-TSP-341	43.5	45.8	ug	94.9	75-125	%		✓	Filter	Total Metals
MS	Copper (Cu)	1440142	SOUTH-TSP-341	99.5	93.2	ug	N/A	-	%	MS-B		Filter	Total Metals
MS	Iron (Fe)	1440142	SOUTH-TSP-341	324	319	ug	102.2	75-125	%		✓	Filter	Total Metals
MS	Lead (Pb)	1440142	SOUTH-TSP-341	40.4	46.5	ug	86.5	75-125	%		✓	Filter	Total Metals
MS	Manganese (Mn)	1440142	SOUTH-TSP-341	46.4	47.9	ug	96.5	75-125	%		✓	Filter	Total Metals
MS	Nickel (Ni)	1440142	SOUTH-TSP-341	45.5	47.1	ug	96.3	75-125	%		✓	Filter	Total Metals
MS	Selenium (Se)	1440142	SOUTH-TSP-341	46.8	45.3	ug	103.3	75-125	%		✓	Filter	Total Metals
MS	Vanadium (V)	1440142	SOUTH-TSP-341	43.2	45.2	ug	95.6	75-125	%		✓	Filter	Total Metals
MS	Zinc (Zn)	1440142	SOUTH-TSP-341	102	102	ug	100.5	75-125	%		✓	Filter	Total Metals
Metals (Dustfall)													
LCS	Aluminum (Al)-Total	1441944	WG3493578-2	0.0532	0.0524	mg/dm2.day	101.5	80-120	%		✓	Dustfall	Metals
LCS	Aluminum (Al)-Total	1441967	WG3493579-2	0.0494	0.0524	mg/dm2.day	94.3	80-120	%		✓	Dustfall	Metals
LCS	Antimony (Sb)-Total	1441944	WG3493578-2	0.0282	0.0262	mg/dm2.day	107.6	80-120	%		✓	Dustfall	Metals
LCS	Antimony (Sb)-Total	1441967	WG3493579-2	0.0268	0.0262	mg/dm2.day	102.4	80-120	%		✓	Dustfall	Metals
LCS	Arsenic (As)-Total	1441944	WG3493578-2	0.0272	0.0262	mg/dm2.day	103.9	80-120	%		✓	Dustfall	Metals
LCS	Arsenic (As)-Total	1441967	WG3493579-2	0.0263	0.0262	mg/dm2.day	100.4	80-120	%		✓	Dustfall	Metals
LCS	Barium (Ba)-Total	1441944	WG3493578-2	0.00685	0.00655	mg/dm2.day	104.6	80-120	%		✓	Dustfall	Metals
LCS	Barium (Ba)-Total	1441967	WG3493579-2	0.00653	0.00655	mg/dm2.day	99.8	80-120	%		✓	Dustfall	Metals
LCS	Beryllium (Be)-Total	1441944	WG3493578-2	0.00273	0.00262	mg/dm2.day	104.4	80-120	%		✓	Dustfall	Metals
LCS	Beryllium (Be)-Total	1441967	WG3493579-2	0.00255	0.00262	mg/dm2.day	97.2	80-120	%		✓	Dustfall	Metals
LCS	Bismuth (Bi)-Total	1441944	WG3493578-2	0.0264	0.0262	mg/dm2.day	100.9	80-120	%		✓	Dustfall	Metals
LCS	Bismuth (Bi)-Total	1441967	WG3493579-2	0.0265	0.0262	mg/dm2.day	101.0	80-120	%		✓	Dustfall	Metals
LCS	Boron (B)-Total	1441944	WG3493578-2	0.0258	0.0262	mg/dm2.day	98.3	80-120	%		✓	Dustfall	Metals
LCS	Boron (B)-Total	1441967	WG3493579-2	0.0247	0.0262	mg/dm2.day	94.2	80-120	%		✓	Dustfall	Metals
LCS	Cadmium (Cd)-Total	1441944	WG3493578-2	0.00275	0.00262	mg/dm2.day	105.1	80-120	%		✓	Dustfall	Metals
LCS	Cadmium (Cd)-Total	1441967	WG3493579-2	0.00260	0.00262	mg/dm2.day	99.4	80-120	%		✓	Dustfall	Metals
LCS	Calcium (Ca)-Total	1441944	WG3493578-2	1.35	1.31	mg/dm2.day	103.3	80-120	%		✓	Dustfall	Metals
LCS	Calcium (Ca)-Total	1441967	WG3493579-2	1.30	1.31	mg/dm2.day	99.0	80-120	%		✓	Dustfall	Metals
LCS	Chromium (Cr)-Total	1441944	WG3493578-2	0.00662	0.00655	mg/dm2.day	101.1	80-120	%		✓	Dustfall	Metals
LCS	Chromium (Cr)-Total	1441967	WG3493579-2	0.00658	0.00655	mg/dm2.day	100.5	80-120	%		✓	Dustfall	Metals
LCS	Cobalt (Co)-Total	1441944	WG3493578-2	0.00682	0.00655	mg/dm2.day	104.1	80-120	%		✓	Dustfall	Metals
LCS	Cobalt (Co)-Total	1441967	WG3493579-2	0.00663	0.00655	mg/dm2.day	101.3	80-120	%		✓	Dustfall	Metals
LCS	Copper (Cu)-Total	1441944	WG3493578-2	0.00681	0.00655	mg/dm2.day	104.0	80-120	%		✓	Dustfall	Metals
LCS	Copper (Cu)-Total	1441967	WG3493579-2	0.00664	0.00655	mg/dm2.day	101.3	80-120	%		✓	Dustfall	Metals
LCS	Iron (Fe)-Total	1441944	WG3493578-2	0.0273	0.0262	mg/dm2.day	104.4	80-120	%		✓	Dustfall	Metals
LCS	Iron (Fe)-Total	1441967	WG3493579-2	0.0263	0.0262	mg/dm2.day	100.5	80-120	%		✓	Dustfall	Metals
LCS	Lead (Pb)-Total	1441944	WG3493578-2	0.0135	0.0131	mg/dm2.day	102.8	80-120	%		✓	Dustfall	Metals
LCS	Lead (Pb)-Total	1441967	WG3493579-2	0.0129	0.0131	mg/dm2.day	98.4	80-120	%		✓	Dustfall	Metals
LCS	Lithium (Li)-Total	1441944	WG3493578-2	0.00662	0.00655	mg/dm2.day	101.1	80-120	%		✓	Dustfall	Metals
LCS	Lithium (Li)-Total	1441967	WG3493579-2	0.00636	0.00655	mg/dm2.day	97.1	80-120	%		✓	Dustfall	Metals
LCS	Magnesium (Mg)-Total	1441944	WG3493578-2	1.38	1.31	mg/dm2.day	105.2	80-120	%		✓	Dustfall	Metals
LCS	Magnesium (Mg)-Total	1441967	WG3493579-2	1.33	1.31	mg/dm2.day	101.2	80-120	%		✓	Dustfall	Metals
LCS	Manganese (Mn)-Total	1441944	WG3493578-2	0.00670	0.00655	mg/dm2.day	102.2	80-120	%		✓	Dustfall	Metals
LCS	Manganese (Mn)-Total	1441967	WG3493579-2	0.00657	0.00655	mg/dm2.day	100.3	80-120	%		✓	Dustfall	Metals
LCS	Molybdenum (Mo)-Total	1441944	WG3493578-2	0.00709	0.00655	mg/dm2.day	108.2	80-120	%		✓	Dustfall	Metals
LCS	Molybdenum (Mo)-Total	1441967	WG3493579-2	0.00690	0.00655	mg/dm2.day	105.3	80-120	%		✓	Dustfall	Metals
LCS	Nickel (Ni)-Total	1441944	WG3493578-2	0.0134	0.0131	mg/dm2.day	102.4	80-120	%		✓	Dustfall	Metals
LCS	Nickel (Ni)-Total	1441967	WG3493579-2	0.0131	0.0131	mg/dm2.day	100.1	80-120	%		✓	Dustfall	Metals
LCS	Phosphorus (P)-Total	1441944	WG3493578-2	0.308	0.262	mg/dm2.day	117.4	80-120	%		✓	Dustfall	Metals
LCS	Phosphorus (P)-Total	1441967	WG3493579-2	0.302	0.262	mg/dm2.day	115.4	80-120	%		✓	Dustfall	Metals
LCS	Potassium (K)-Total	1441944	WG3493578-2	1.36	1.31	mg/dm2.day	103.7	80-120	%		✓	Dustfall	Metals

Quality Control L2555439

Job Reference NEW GOLD RRP
Report To Sarah Flesher, New Gold Inc. Rainy River Project
Date Received 8-Feb-2021 8:40
Report Date 4-Mar-2021 9:41
Report Version 1

QC Type	Analyte	QC Lot #	ALS QC ID	Result	Target	Units	%	Limit	Units	Qual	Eval	Matrix	Class
LCS	Potassium (K)-Total	1441967	WG3493579-2	1.32	1.31	mg/dm2.day	100.6	80-120	%		✓	Dustfall	Metals
LCS	Selenium (Se)-Total	1441944	WG3493578-2	0.0267	0.0262	mg/dm2.day	102.0	80-120	%		✓	Dustfall	Metals
LCS	Selenium (Se)-Total	1441967	WG3493579-2	0.0254	0.0262	mg/dm2.day	96.9	80-120	%		✓	Dustfall	Metals
LCS	Silicon (Si)-Total	1441944	WG3493578-2	0.262	0.262	mg/dm2.day	99.95	80-120	%		✓	Dustfall	Metals
LCS	Silicon (Si)-Total	1443439	WG3495960-2	0.262	0.262	mg/dm2.day	100.0	80-120	%		✓	Dustfall	Metals
LCS	Silver (Ag)-Total	1441944	WG3493578-2	0.00269	0.00262	mg/dm2.day	102.6	80-120	%		✓	Dustfall	Metals
LCS	Silver (Ag)-Total	1441967	WG3493579-2	0.00261	0.00262	mg/dm2.day	99.7	80-120	%		✓	Dustfall	Metals
LCS	Sodium (Na)-Total	1441944	WG3493578-2	1.31	1.31	mg/dm2.day	100.3	80-120	%		✓	Dustfall	Metals
LCS	Sodium (Na)-Total	1441967	WG3493579-2	1.27	1.31	mg/dm2.day	97.0	80-120	%		✓	Dustfall	Metals
LCS	Strontium (Sr)-Total	1441944	WG3493578-2	0.00698	0.00655	mg/dm2.day	106.6	80-120	%		✓	Dustfall	Metals
LCS	Strontium (Sr)-Total	1441967	WG3493579-2	0.00677	0.00655	mg/dm2.day	103.4	80-120	%		✓	Dustfall	Metals
LCS	Thallium (Tl)-Total	1441944	WG3493578-2	0.0268	0.0262	mg/dm2.day	102.3	80-120	%		✓	Dustfall	Metals
LCS	Thallium (Tl)-Total	1441967	WG3493579-2	0.0264	0.0262	mg/dm2.day	100.6	80-120	%		✓	Dustfall	Metals
LCS	Tin (Sn)-Total	1441944	WG3493578-2	0.0136	0.0131	mg/dm2.day	104.2	80-120	%		✓	Dustfall	Metals
LCS	Tin (Sn)-Total	1441967	WG3493579-2	0.0125	0.0131	mg/dm2.day	95.2	80-120	%		✓	Dustfall	Metals
LCS	Titanium (Ti)-Total	1441944	WG3493578-2	0.00632	0.00655	mg/dm2.day	96.5	80-120	%		✓	Dustfall	Metals
LCS	Titanium (Ti)-Total	1441967	WG3493579-2	0.00577	0.00655	mg/dm2.day	88.1	80-120	%		✓	Dustfall	Metals
LCS	Uranium (U)-Total	1441944	WG3493578-2	0.000129	0.000131	mg/dm2.day	98.5	80-120	%		✓	Dustfall	Metals
LCS	Uranium (U)-Total	1441967	WG3493579-2	0.000126	0.000131	mg/dm2.day	96.3	80-120	%		✓	Dustfall	Metals
LCS	Vanadium (V)-Total	1441944	WG3493578-2	0.0135	0.0131	mg/dm2.day	103.3	80-120	%		✓	Dustfall	Metals
LCS	Vanadium (V)-Total	1441967	WG3493579-2	0.0131	0.0131	mg/dm2.day	99.9	80-120	%		✓	Dustfall	Metals
LCS	Zinc (Zn)-Total	1441944	WG3493578-2	0.0135	0.0131	mg/dm2.day	102.8	80-120	%		✓	Dustfall	Metals
LCS	Zinc (Zn)-Total	1441967	WG3493579-2	0.0131	0.0131	mg/dm2.day	99.7	80-120	%		✓	Dustfall	Metals
Particulates (Dustfall)													
MB	Fixed Dustfall	1441690	WG3493667-1	<0.10		mg/dm2.day	-	<0.10	mg/dm2.day		✓	Dustfall	Particulates
MB	Volatile Dustfall	1441690	WG3493667-1	<0.10		mg/dm2.day	-	<0.10	mg/dm2.day		✓	Dustfall	Particulates
MB	Total Dustfall	1441690	WG3493667-1	<0.10		mg/dm2.day	-	<0.10	mg/dm2.day		✓	Dustfall	Particulates
MB	Fixed Insoluble Dustfall	1441690	WG3493667-1	<0.10		mg/dm2.day	-	<0.10	mg/dm2.day		✓	Dustfall	Particulates
MB	Volatile Insoluble Dustfall	1441690	WG3493667-1	<0.10		mg/dm2.day	-	<0.10	mg/dm2.day		✓	Dustfall	Particulates
MB	Total Insoluble Dustfall	1441690	WG3493667-1	<0.10		mg/dm2.day	-	<0.10	mg/dm2.day		✓	Dustfall	Particulates
MB	Fixed Soluble Dustfall	1441690	WG3493667-1	<0.10		mg/dm2.day	-	<0.10	mg/dm2.day		✓	Dustfall	Particulates
MB	Volatile Soluble Dustfall	1441690	WG3493667-1	<0.10		mg/dm2.day	-	<0.10	mg/dm2.day		✓	Dustfall	Particulates
MB	Total Soluble Dustfall	1441690	WG3493667-1	<0.10		mg/dm2.day	-	<0.10	mg/dm2.day		✓	Dustfall	Particulates
Metals (Dustfall)													
MB	Aluminum (Al)-Total	1441944	WG3493578-1	<0.000079		mg/dm2.day	-	<0.000079	mg/dm2.day		✓	Dustfall	Metals
MB	Aluminum (Al)-Total	1441967	WG3493579-1	0.000115		mg/dm2.day	-	<0.000079	mg/dm2.day	B	×	Dustfall	Metals
MB	Antimony (Sb)-Total	1441944	WG3493578-1	<0.0000026		mg/dm2.day	-	<0.0000026	mg/dm2.day		✓	Dustfall	Metals
MB	Antimony (Sb)-Total	1441967	WG3493579-1	<0.0000026		mg/dm2.day	-	<0.0000026	mg/dm2.day		✓	Dustfall	Metals
MB	Arsenic (As)-Total	1441944	WG3493578-1	<0.0000026		mg/dm2.day	-	<0.0000026	mg/dm2.day		✓	Dustfall	Metals
MB	Arsenic (As)-Total	1441967	WG3493579-1	<0.0000026		mg/dm2.day	-	<0.0000026	mg/dm2.day		✓	Dustfall	Metals
MB	Barium (Ba)-Total	1441944	WG3493578-1	<0.0000013		mg/dm2.day	-	<0.0000013	mg/dm2.day		✓	Dustfall	Metals
MB	Barium (Ba)-Total	1441967	WG3493579-1	<0.0000013		mg/dm2.day	-	<0.0000013	mg/dm2.day		✓	Dustfall	Metals
MB	Beryllium (Be)-Total	1441944	WG3493578-1	<0.000013		mg/dm2.day	-	<0.000013	mg/dm2.day		✓	Dustfall	Metals
MB	Beryllium (Be)-Total	1441967	WG3493579-1	<0.000013		mg/dm2.day	-	<0.000013	mg/dm2.day		✓	Dustfall	Metals
MB	Bismuth (Bi)-Total	1441944	WG3493578-1	<0.000013		mg/dm2.day	-	<0.000013	mg/dm2.day		✓	Dustfall	Metals
MB	Bismuth (Bi)-Total	1441967	WG3493579-1	<0.000013		mg/dm2.day	-	<0.000013	mg/dm2.day		✓	Dustfall	Metals
MB	Boron (B)-Total	1441944	WG3493578-1	<0.00026		mg/dm2.day	-	<0.00026	mg/dm2.day		✓	Dustfall	Metals
MB	Boron (B)-Total	1441967	WG3493579-1	<0.00026		mg/dm2.day	-	<0.00026	mg/dm2.day		✓	Dustfall	Metals
MB	Cadmium (Cd)-Total	1441944	WG3493578-1	<0.0000013		mg/dm2.day	-	<0.0000013	mg/dm2.day		✓	Dustfall	Metals
MB	Cadmium (Cd)-Total	1441967	WG3493579-1	<0.0000013		mg/dm2.day	-	<0.0000013	mg/dm2.day		✓	Dustfall	Metals
MB	Calcium (Ca)-Total	1441944	WG3493578-1	<0.00052		mg/dm2.day	-	<0.00052	mg/dm2.day		✓	Dustfall	Metals
MB	Calcium (Ca)-Total	1441967	WG3493579-1	<0.00052		mg/dm2.day	-	<0.00052	mg/dm2.day		✓	Dustfall	Metals
MB	Chromium (Cr)-Total	1441944	WG3493578-1	<0.000013		mg/dm2.day	-	<0.000013	mg/dm2.day		✓	Dustfall	Metals
MB	Chromium (Cr)-Total	1441967	WG3493579-1	<0.000013		mg/dm2.day	-	<0.000013	mg/dm2.day		✓	Dustfall	Metals
MB	Cobalt (Co)-Total	1441944	WG3493578-1	<0.0000026		mg/dm2.day	-	<0.0000026	mg/dm2.day		✓	Dustfall	Metals
MB	Cobalt (Co)-Total	1441967	WG3493579-1	<0.0000026		mg/dm2.day	-	<0.0000026	mg/dm2.day		✓	Dustfall	Metals
MB	Copper (Cu)-Total	1441944	WG3493578-1	<0.000013		mg/dm2.day	-	<0.000013	mg/dm2.day		✓	Dustfall	Metals
MB	Copper (Cu)-Total	1441967	WG3493579-1	<0.000013		mg/dm2.day	-	<0.000013	mg/dm2.day		✓	Dustfall	Metals
MB	Iron (Fe)-Total	1441944	WG3493578-1	<0.00079		mg/dm2.day	-	<0.00079	mg/dm2.day		✓	Dustfall	Metals
MB	Iron (Fe)-Total	1441967	WG3493579-1	<0.00079		mg/dm2.day	-	<0.00079	mg/dm2.day		✓	Dustfall	Metals
MB	Lead (Pb)-Total	1441944	WG3493578-1	<0.0000013		mg/dm2.day	-	<0.0000013	mg/dm2.day		✓	Dustfall	Metals
MB	Lead (Pb)-Total	1441967	WG3493579-1	<0.0000013		mg/dm2.day	-	<0.0000013	mg/dm2.day		✓	Dustfall	Metals
MB	Lithium (Li)-Total	1441944	WG3493578-1	<0.00013		mg/dm2.day	-	<0.00013	mg/dm2.day		✓	Dustfall	Metals
MB	Lithium (Li)-Total	1441967	WG3493579-1	<0.00013		mg/dm2.day	-	<0.00013	mg/dm2.day		✓	Dustfall	Metals
MB	Magnesium (Mg)-Total	1441944	WG3493578-1	<0.00013		mg/dm2.day	-	<0.00013	mg/dm2.day		✓	Dustfall	Metals
MB	Magnesium (Mg)-Total	1441967	WG3493579-1	<0.00013		mg/dm2.day	-	<0.00013	mg/dm2.day		✓	Dustfall	Metals
MB	Manganese (Mn)-Total	1441944	WG3493578-1	<0.0000026		mg/dm2.day	-	<0.0000026	mg/dm2.day		✓	Dustfall	Metals
MB	Manganese (Mn)-Total	1441967	WG3493579-1	<0.0000026		mg/dm2.day	-	<0.0000026	mg/dm2.day		✓	Dustfall	Metals
MB	Molybdenum (Mo)-Total	1441944	WG3493578-1	<0.0000013		mg/dm2.day	-	<0.0000013	mg/dm2.day		✓	Dustfall	Metals
MB	Molybdenum (Mo)-Total	1441967	WG3493579-1	<0.0000013		mg/dm2.day	-	<0.0000013	mg/dm2.day		✓	Dustfall	Metals
MB	Nickel (Ni)-Total	1441944	WG3493578-1	<0.000013		mg/dm2.day	-	<0.000013	mg/dm2.day		✓	Dustfall	Metals
MB	Nickel (Ni)-Total	1441967	WG3493579-1	<0.000013		mg/dm2.day	-	<0.000013	mg/dm2.day		✓	Dustfall	Metals
MB	Phosphorus (P)-Total	1441944	WG3493578-1	0.0016		mg/dm2.day	-	<0.0013	mg/dm2.day	MB-LOR	×	Dustfall	Metals
MB	Phosphorus (P)-Total	1441967	WG3493579-1	0.0026		mg/dm2.day	-	<0.0013	mg/dm2.day	MB-LOR	×	Dustfall	Metals
MB	Potassium (K)-Total	1441944	WG3493578-1	<0.0013		mg/dm2.day	-	<0.0013	mg/dm2.day		✓	Dustfall	Metals
MB	Potassium (K)-Total	1441967	WG3493579-1	<0.0013		mg/dm2.day	-	<0.0013	mg/dm2.day		✓	Dustfall	Metals
MB	Selenium (Se)-Total	1441944	WG3493578-1	<0.000026		mg/dm2.day	-	<0.000026	mg/dm2.day		✓	Dustfall	Metals
MB	Selenium (Se)-Total	1441967	WG3493579-1	<0.000026		mg/dm2.day	-	<0.000026	mg/dm2.day		✓	Dustfall	Metals
MB	Silicon (Si)-Total	1441944	WG3493578-1	<0.0013		mg/dm2.day	-	<0.0013	mg/dm2.day		✓	Dustfall	Metals
MB	Silicon (Si)-Total	1441967	WG3493579-1	<0.0013		mg/dm2.day	-	<0.0013	mg/dm2.day		✓	Dustfall	Metals
MB	Silicon (Si)-Total	1443439	WG3495960-1	<0.0013		mg/dm2.day	-	<0.0013	mg/dm2.day		✓	Dustfall	Metals
MB	Silver (Ag)-Total	1441944	WG3493578-1	<0.00000026		mg/dm2.day	-	<0.00000026	mg/dm2.day		✓	Dustfall	Metals
MB	Silver (Ag)-Total	1441967	WG3493579-1	<0.00000026		mg/dm2.day	-	<0.00000026	mg/dm2.day		✓	Dustfall	Metals
MB	Sodium (Na)-Total	1441944	WG3493578-1	<0.0013		mg/dm2.day	-	<0.0013	mg/dm2.day		✓	Dustfall	Metals
MB	Sodium (Na)-Total	1441967	WG3493579-1	<0.0013		mg/dm2.day	-	<0.0013	mg/dm2.day		✓	Dustfall	Metals
MB	Strontium (Sr)-Total	1441944	WG3493578-1	<0.0000026		mg/dm2.day	-	<0.0000026	mg/dm2.day		✓	Dustfall	Metals

Quality Control L2555439

Job Reference NEW GOLD RRP
Report To Sarah Flesher, New Gold Inc. Rainy River Project
Date Received 8-Feb-2021 8:40
Report Date 4-Mar-2021 9:41
Report Version 1

QC Type	Analyte	QC Lot #	ALS QC ID	Result	Target	Units	%	Limit	Units	Qual	Eval	Matrix	Class
MB	Strontium (Sr)-Total	1441967	WG3493579-1	<0.0000026		mg/dm2.day	-	<0.0000026	mg/dm2.day		✓	Dustfall	Metals
MB	Thallium (Tl)-Total	1441944	WG3493578-1	<0.0000026		mg/dm2.day	-	<0.0000026	mg/dm2.day		✓	Dustfall	Metals
MB	Thallium (Tl)-Total	1441967	WG3493579-1	<0.0000026		mg/dm2.day	-	<0.0000026	mg/dm2.day		✓	Dustfall	Metals
MB	Tin (Sn)-Total	1441944	WG3493578-1	<0.0000026		mg/dm2.day	-	<0.0000026	mg/dm2.day		✓	Dustfall	Metals
MB	Tin (Sn)-Total	1441967	WG3493579-1	<0.0000026		mg/dm2.day	-	<0.0000026	mg/dm2.day		✓	Dustfall	Metals
MB	Titanium (Ti)-Total	1441944	WG3493578-1	<0.00026		mg/dm2.day	-	<0.00026	mg/dm2.day		✓	Dustfall	Metals
MB	Titanium (Ti)-Total	1441967	WG3493579-1	<0.00026		mg/dm2.day	-	<0.00026	mg/dm2.day		✓	Dustfall	Metals
MB	Uranium (U)-Total	1441944	WG3493578-1	<0.00000026		mg/dm2.day	-	<0.00000026	mg/dm2.day		✓	Dustfall	Metals
MB	Uranium (U)-Total	1441967	WG3493579-1	<0.00000026		mg/dm2.day	-	<0.00000026	mg/dm2.day		✓	Dustfall	Metals
MB	Vanadium (V)-Total	1441944	WG3493578-1	<0.000026		mg/dm2.day	-	<0.000026	mg/dm2.day		✓	Dustfall	Metals
MB	Vanadium (V)-Total	1441967	WG3493579-1	<0.000026		mg/dm2.day	-	<0.000026	mg/dm2.day		✓	Dustfall	Metals
MB	Zinc (Zn)-Total	1441944	WG3493578-1	<0.000079		mg/dm2.day	-	<0.000079	mg/dm2.day		✓	Dustfall	Metals
MB	Zinc (Zn)-Total	1441967	WG3493579-1	<0.000079		mg/dm2.day	-	<0.000079	mg/dm2.day		✓	Dustfall	Metals

Qualifier Legend

B	Method Blank exceeds ALS DQO. Associated sample results which are < Limit of Reporting or > 5 times blank level are considered reliable.
MB-LOR	Method Blank exceeds ALS DQO. Limits of Reporting have been adjusted for samples with positive hits below 5x blank level.
MS-B	Matrix Spike recovery could not be accurately calculated due to high analyte background in sample.

Evaluation Legend

✓	QC Lot met ALS Data Quality Objectives
✗	QC Lot did not meet ALS Data Quality Objectives

Methodology L2555439

Job Reference NEW GOLD RRP
Report To Sarah Flesher, New Gold Inc. Rainy River Project

Date Received 8-Feb-2021 8:40
Report Date 4-Mar-2021 9:41
Report Version 1

ALS Test Code	ALS Test Description	Lab Location	Matrix	Method Reference	Methodology Description
Particulates (Dustfall)					
DUSTFALLS-ALL-DM2-VA	Dustfalls-Total, Soluble, Insoluble +FV	Vancouver	Dustfall	BC LAB MANUAL - PARTICULATE	This analysis is carried out using procedures modified from British Columbia Environmental Manual "Particulate." Particulates or "Dustfalls" are determined gravimetrically. Total Insoluble and Soluble Dustfalls are determined by filtering a sample through a 0.45 um membrane filter and drying the filter and filtrate at 104 C, followed by ignition at 550 C. The remaining residue after 550 C represents the fixed portion and the weight lost on ignition represents the volatile portion. The sum of all fixed and volatile portions on both Insoluble and Soluble portions represents Total Dustfalls.
PART-HIVOL-GRAV-BU	Particulate on High Volume Filter	Burlington	Filter	USEPA IO3.1	
PART-M212 F-GRAV-BU	PM via Gravimetric Analysis	Burlington	Filter	EPA QA Guidance Document 2.12	The particulate matter collected onto tare-weighed 47mm Teflon Disc filter media is desiccated then brought to a constant weight on an analytical balance. Results are presented in ug (per filter). An air volume can be included to allow for reporting in ug/m3.
Particulates (Filter)					
DUSTFALLS-ALL-DM2-VA	Dustfalls-Total, Soluble, Insoluble +FV	Vancouver	Dustfall	BC LAB MANUAL - PARTICULATE	This analysis is carried out using procedures modified from British Columbia Environmental Manual "Particulate." Particulates or "Dustfalls" are determined gravimetrically. Total Insoluble and Soluble Dustfalls are determined by filtering a sample through a 0.45 um membrane filter and drying the filter and filtrate at 104 C, followed by ignition at 550 C. The remaining residue after 550 C represents the fixed portion and the weight lost on ignition represents the volatile portion. The sum of all fixed and volatile portions on both Insoluble and Soluble portions represents Total Dustfalls.
PART-HIVOL-GRAV-BU	Particulate on High Volume Filter	Burlington	Filter	USEPA IO3.1	
PART-M212 F-GRAV-BU	PM via Gravimetric Analysis	Burlington	Filter	EPA QA Guidance Document 2.12	The particulate matter collected onto tare-weighed 47mm Teflon Disc filter media is desiccated then brought to a constant weight on an analytical balance. Results are presented in ug (per filter). An air volume can be included to allow for reporting in ug/m3.
Metals (Dustfall)					
MET-DUST(DM2)-MS-VA	Total Metals in Dustfalls by ICPMS	Vancouver	Dustfall	EPA 6020A	This analysis is carried out using procedures adapted from "Standard Methods for the Examination of Water and Wastewater" published by the American Public Health Association, and with procedures adapted from "Test Methods for Evaluating Solid Waste" SW-846 published by the United States Environmental Protection Agency (EPA). Instrumental analysis is by inductively coupled plasma - mass spectrometry (EPA Method 6020A).
Total Metals (Filter)					
MET-IO3.5-MS-BU	Metals on High Volume Filter by ICPMS	Burlington	Filter	IO3.5	After weighing (if required), hivol filters are sub-sampled and leached with nitric acid to extract available metal analytes. After dilution, the extracts are submitted to the ICPMS instrument for analysis.

Detection Limits L2555439

Job Reference NEW GOLD RRP
Report To Sarah Flesher, New Gold Inc. Rainy River Project
Date Received 8-Feb-2021 8:40
Report Date 4-Mar-2021 9:41
Report Version 1

Client Sample ID		SOUTH-TSP-341	SOUTH-TSP-342	SOUTH-TSP-343	SOUTH-TSP-344	SOUTH-TSP-345	NORTH-TSP-341	NORTH-TSP-342	NORTH-TSP-343	NORTH-TSP-344	NORTH-TSP-345	NORTHWEST-TSP-341	NORTHWEST-TSP-342	NORTHWEST-TSP-343
Date Sampled		4-Jan-2021	10-Jan-2021	16-Jan-2021	22-Jan-2021	28-Jan-2021	4-Jan-2021	10-Jan-2021	16-Jan-2021	22-Jan-2021	28-Jan-2021	4-Jan-2021	10-Jan-2021	16-Jan-2021
Time Sampled		0:00	0:00	0:00	0:00	0:00	0:00	0:00	0:00	0:00	0:00	0:00	0:00	0:00
ALS Sample ID		L2555439-1	L2555439-2	L2555439-3	L2555439-4	L2555439-5	L2555439-6	L2555439-7	L2555439-8	L2555439-9	L2555439-10	L2555439-11	L2555439-12	L2555439-13
Parameter	Units	Filter	Filter	Filter	Filter	Filter	Filter	Filter	Filter	Filter	Filter	Filter	Filter	Filter
Particulates (Filter)														
Total particulate	ug	2300	2300	2300	2300	2300	2300	2300	2300	2300	2300	2300	2300	2300
Total Metals (Filter)														
Arsenic (As)	ug	3.0	3.0	3.0	3.0	3.0	3.0	3.0	3.0	3.0	3.0	3.0	3.0	3.0
Cadmium (Cd)	ug	2.0	2.0	2.0	2.0	2.0	2.0	2.0	2.0	2.0	2.0	2.0	2.0	2.0
Chromium (Cr)	ug	5.0	5.0	5.0	5.0	5.0	5.0	5.0	5.0	5.0	5.0	5.0	5.0	5.0
Cobalt (Co)	ug	2.0	2.0	2.0	2.0	2.0	2.0	2.0	2.0	2.0	2.0	2.0	2.0	2.0
Copper (Cu)	ug	4.0	4.0	4.0	4.0	4.0	4.0	4.0	4.0	4.0	4.0	4.0	4.0	4.0
Iron (Fe)	ug	20	20	20	20	20	20	20	20	20	20	20	20	20
Lead (Pb)	ug	3.0	3.0	3.0	3.0	3.0	3.0	3.0	3.0	3.0	3.0	3.0	3.0	3.0
Manganese (Mn)	ug	1.0	1.0	1.0	1.0	1.0	1.0	1.0	1.0	1.0	1.0	1.0	1.0	1.0
Nickel (Ni)	ug	3.0	3.0	3.0	3.0	3.0	3.0	3.0	3.0	3.0	3.0	3.0	3.0	3.0
Selenium (Se)	ug	10	10	10	10	10	10	10	10	10	10	10	10	10
Vanadium (V)	ug	5.0	5.0	5.0	5.0	5.0	5.0	5.0	5.0	5.0	5.0	5.0	5.0	5.0
Zinc (Zn)	ug	5.0	5.0	5.0	5.0	5.0	5.0	5.0	5.0	5.0	5.0	5.0	5.0	5.0
Particulates (Dustfall)														
Fixed Dustfall	mg/dm2.day													
Volatile Dustfall	mg/dm2.day													
Total Dustfall	mg/dm2.day													
Fixed Insoluble Dustfall	mg/dm2.day													
Volatile Insoluble Dustfall	mg/dm2.day													
Total Insoluble Dustfall	mg/dm2.day													
Fixed Soluble Dustfall	mg/dm2.day													
Volatile Soluble Dustfall	mg/dm2.day													
Total Soluble Dustfall	mg/dm2.day													
Metals (Dustfall)														
Aluminum (Al)-Total	mg/dm2.day													
Antimony (Sb)-Total	mg/dm2.day													
Arsenic (As)-Total	mg/dm2.day													
Barium (Ba)-Total	mg/dm2.day													
Beryllium (Be)-Total	mg/dm2.day													
Bismuth (Bi)-Total	mg/dm2.day													
Boron (B)-Total	mg/dm2.day													
Cadmium (Cd)-Total	mg/dm2.day													
Calcium (Ca)-Total	mg/dm2.day													
Chromium (Cr)-Total	mg/dm2.day													
Cobalt (Co)-Total	mg/dm2.day													
Copper (Cu)-Total	mg/dm2.day													
Iron (Fe)-Total	mg/dm2.day													
Lead (Pb)-Total	mg/dm2.day													
Lithium (Li)-Total	mg/dm2.day													
Magnesium (Mg)-Total	mg/dm2.day													
Manganese (Mn)-Total	mg/dm2.day													
Molybdenum (Mo)-Total	mg/dm2.day													
Nickel (Ni)-Total	mg/dm2.day													
Phosphorus (P)-Total	mg/dm2.day													

Detection Limits L2555439

Job Reference NEW GOLD RRP
Report To Sarah Flesher, New Golc
Date Received 8-Feb-2021 8:40
Report Date 4-Mar-2021 9:41
Report Version 1

Client Sample ID		NORTHWEST-TSP-344	NORTHWEST-TSP-345	TRAVEL BLANK TSP	SOUTH-PM2.5-341	SOUTH-PM2.5-342	SOUTH-PM2.5-343	SOUTH-PM2.5-344	SOUTH-PM2.5-345	NORTH-PM2.5-341	NORTH-PM2.5-342	NORTH-PM2.5-343	NORTH-PM2.5-344
Date Sampled		22-Jan-2021	28-Jan-2021	2-Feb-2021	4-Jan-2021	10-Jan-2021	16-Jan-2021	22-Jan-2021	28-Jan-2021	4-Jan-2021	10-Jan-2021	16-Jan-2021	22-Jan-2021
Time Sampled		0:00	0:00	0:00	0:00	0:00	0:00	0:00	0:00	0:00	0:00	0:00	0:00
ALS Sample ID		L2555439-14	L2555439-15	L2555439-16	L2555439-17	L2555439-18	L2555439-19	L2555439-20	L2555439-21	L2555439-22	L2555439-23	L2555439-24	L2555439-25
Parameter	Units	Filter	Filter	Filter	Filter	Filter	Filter	Filter	Filter	Filter	Filter	Filter	Filter
Particulates (Filter)													
Total particulate	ug	2300	2300	2300	15	15	15	15	15	15	15	15	15
Total Metals (Filter)													
Arsenic (As)	ug	3.0	3.0	3.0									
Cadmium (Cd)	ug	2.0	2.0	2.0									
Chromium (Cr)	ug	5.0	5.0	5.0									
Cobalt (Co)	ug	2.0	2.0	2.0									
Copper (Cu)	ug	4.0	4.0	4.0									
Iron (Fe)	ug	20	20	20									
Lead (Pb)	ug	3.0	3.0	3.0									
Manganese (Mn)	ug	1.0	1.0	1.0									
Nickel (Ni)	ug	3.0	3.0	3.0									
Selenium (Se)	ug	10	10	10									
Vanadium (V)	ug	5.0	5.0	5.0									
Zinc (Zn)	ug	5.0	5.0	5.0									
Particulates (Dustfall)													
Fixed Dustfall	mg/dm2.day												
Volatile Dustfall	mg/dm2.day												
Total Dustfall	mg/dm2.day												
Fixed Insoluble Dustfall	mg/dm2.day												
Volatile Insoluble Dustfall	mg/dm2.day												
Total Insoluble Dustfall	mg/dm2.day												
Fixed Soluble Dustfall	mg/dm2.day												
Volatile Soluble Dustfall	mg/dm2.day												
Total Soluble Dustfall	mg/dm2.day												
Metals (Dustfall)													
Aluminum (Al)-Total	mg/dm2.day												
Antimony (Sb)-Total	mg/dm2.day												
Arsenic (As)-Total	mg/dm2.day												
Barium (Ba)-Total	mg/dm2.day												
Beryllium (Be)-Total	mg/dm2.day												
Bismuth (Bi)-Total	mg/dm2.day												
Boron (B)-Total	mg/dm2.day												
Cadmium (Cd)-Total	mg/dm2.day												
Calcium (Ca)-Total	mg/dm2.day												
Chromium (Cr)-Total	mg/dm2.day												
Cobalt (Co)-Total	mg/dm2.day												
Copper (Cu)-Total	mg/dm2.day												
Iron (Fe)-Total	mg/dm2.day												
Lead (Pb)-Total	mg/dm2.day												
Lithium (Li)-Total	mg/dm2.day												
Magnesium (Mg)-Total	mg/dm2.day												
Manganese (Mn)-Total	mg/dm2.day												
Molybdenum (Mo)-Total	mg/dm2.day												
Nickel (Ni)-Total	mg/dm2.day												
Phosphorus (P)-Total	mg/dm2.day												

Detection Limits L2555439

Job Reference NEW GOLD RRP
Report To Sarah Flesher, New Golc
Date Received 8-Feb-2021 8:40
Report Date 4-Mar-2021 9:41
Report Version 1

Client Sample ID		NORTH-PM2.5-345	NORTHWEST-PM2.5-341	NORTHWEST-PM2.5-342	NORTHWEST-PM2.5-343	NORTHWEST-PM2.5-344	NORTHWEST-PM2.5-345	TRAVEL BLANK PM2.5	NOP1-DUSTFALL-1	SPP1-DUSTFALL-8	WCD1-DUSTFALL-1	GH1-DUSTFALL-1	SPP1-DUSTFALL-4	SPP1-DUSTFALL-5
Date Sampled		28-Jan-2021	4-Jan-2021	10-Jan-2021	16-Jan-2021	22-Jan-2021	28-Jan-2021	2-Feb-2021	2-Feb-2021	3-Feb-2021	2-Feb-2021	3-Feb-2021	6-Jan-2021	13-Jan-2021
Time Sampled		0:00	0:00	0:00	0:00	0:00	0:00	0:00	0:00	0:00	0:00	0:00	0:00	0:00
ALS Sample ID		L2555439-26	L2555439-27	L2555439-28	L2555439-29	L2555439-30	L2555439-31	L2555439-32	L2555439-33	L2555439-34	L2555439-35	L2555439-36	L2555439-37	L2555439-38
Parameter	Units	Filter	Filter	Filter	Filter	Filter	Filter	Filter	Dustfall	Dustfall	Dustfall	Dustfall	Dustfall	Dustfall
Particulates (Filter)														
Total particulate	ug	15	15	15	15	15	15	15						
Total Metals (Filter)														
Arsenic (As)	ug													
Cadmium (Cd)	ug													
Chromium (Cr)	ug													
Cobalt (Co)	ug													
Copper (Cu)	ug													
Iron (Fe)	ug													
Lead (Pb)	ug													
Manganese (Mn)	ug													
Nickel (Ni)	ug													
Selenium (Se)	ug													
Vanadium (V)	ug													
Zinc (Zn)	ug													
Particulates (Dustfall)														
Fixed Dustfall	mg/dm2.day								0.10	0.10	0.10	0.10	0.43	0.43
Volatile Dustfall	mg/dm2.day								0.10	0.10	0.10	0.10	0.43	0.43
Total Dustfall	mg/dm2.day								0.10	0.10	0.10	0.10	0.43	0.43
Fixed Insoluble Dustfall	mg/dm2.day								0.10	0.10	0.10	0.10	0.43	0.43
Volatile Insoluble Dustfall	mg/dm2.day								0.10	0.10	0.10	0.10	0.43	0.43
Total Insoluble Dustfall	mg/dm2.day								0.10	0.10	0.10	0.10	0.43	0.43
Fixed Soluble Dustfall	mg/dm2.day								0.10	0.10	0.10	0.10	0.43	0.43
Volatile Soluble Dustfall	mg/dm2.day								0.10	0.10	0.10	0.10	0.43	0.43
Total Soluble Dustfall	mg/dm2.day								0.10	0.10	0.10	0.10	0.43	0.43
Metals (Dustfall)														
Aluminum (Al)-Total	mg/dm2.day								0.000047	0.000052	0.000043	0.000054	0.00023	0.00017
Antimony (Sb)-Total	mg/dm2.day								0.0000016	0.0000017	0.0000014	0.0000018	0.0000077	0.0000057
Arsenic (As)-Total	mg/dm2.day								0.0000016	0.0000017	0.0000014	0.0000018	0.0000077	0.0000057
Barium (Ba)-Total	mg/dm2.day								0.00000078	0.00000087	0.00000072	0.00000090	0.0000039	0.0000028
Beryllium (Be)-Total	mg/dm2.day								0.0000078	0.0000087	0.0000072	0.0000090	0.000039	0.000028
Bismuth (Bi)-Total	mg/dm2.day								0.0000078	0.0000087	0.0000072	0.0000090	0.000039	0.000028
Boron (B)-Total	mg/dm2.day								0.00016	0.00017	0.00014	0.00018	0.00077	0.00057
Cadmium (Cd)-Total	mg/dm2.day								0.00000078	0.00000087	0.00000072	0.00000090	0.0000039	0.0000028
Calcium (Ca)-Total	mg/dm2.day								0.00031	0.00035	0.00029	0.00036	0.0015	0.0011
Chromium (Cr)-Total	mg/dm2.day								0.0000078	0.0000087	0.0000072	0.0000090	0.000039	0.000028
Cobalt (Co)-Total	mg/dm2.day								0.0000016	0.0000017	0.0000014	0.0000018	0.0000077	0.0000057
Copper (Cu)-Total	mg/dm2.day								0.0000078	0.0000087	0.0000072	0.0000090	0.000039	0.000028
Iron (Fe)-Total	mg/dm2.day								0.00047	0.00052	0.00043	0.00054	0.0023	0.0017
Lead (Pb)-Total	mg/dm2.day								0.00000078	0.00000087	0.00000072	0.00000090	0.0000039	0.0000028
Lithium (Li)-Total	mg/dm2.day								0.000078	0.000087	0.000072	0.000090	0.00039	0.00028
Magnesium (Mg)-Total	mg/dm2.day								0.000078	0.000087	0.000072	0.000090	0.00039	0.00028
Manganese (Mn)-Total	mg/dm2.day								0.0000016	0.0000017	0.0000014	0.0000018	0.0000077	0.0000057
Molybdenum (Mo)-Total	mg/dm2.day								0.00000078	0.00000087	0.00000072	0.00000090	0.0000039	0.0000028
Nickel (Ni)-Total	mg/dm2.day								0.0000078	0.0000087	0.0000072	0.0000090	0.000039	0.000028
Phosphorus (P)-Total	mg/dm2.day								0.0031	0.00087	0.00072	0.00090	0.0039	0.0057

Detection Limits L2555439

Job Reference NEW GOLD RRP
Report To Sarah Flesher, New Golc
Date Received 8-Feb-2021 8:40
Report Date 4-Mar-2021 9:41
Report Version 1

Client Sample ID		SPP1-DUSTFALL-6	SPP1-DUSTFALL-7	DUSTFALL-GALLINGER ROAD	DUSTFALL-TAIT ROAD (SOUTH)
Date Sampled		20-Jan-2021	27-Jan-2021	2-Feb-2021	2-Feb-2021
Time Sampled		0:00	0:00	0:00	0:00
ALS Sample ID		L2555439-39	L2555439-40	L2555439-41	L2555439-42
Parameter	Units	Dustfall	Dustfall	Dustfall	Dustfall
Particulates (Filter)					
Total particulate	ug				
Total Metals (Filter)					
Arsenic (As)	ug				
Cadmium (Cd)	ug				
Chromium (Cr)	ug				
Cobalt (Co)	ug				
Copper (Cu)	ug				
Iron (Fe)	ug				
Lead (Pb)	ug				
Manganese (Mn)	ug				
Nickel (Ni)	ug				
Selenium (Se)	ug				
Vanadium (V)	ug				
Zinc (Zn)	ug				
Particulates (Dustfall)					
Fixed Dustfall	mg/dm2.day	0.43	0.43	0.10	0.10
Volatile Dustfall	mg/dm2.day	0.43	0.43	0.10	0.10
Total Dustfall	mg/dm2.day	0.43	0.43	0.10	0.10
Fixed Insoluble Dustfall	mg/dm2.day	0.43	0.43	0.10	0.10
Volatile Insoluble Dustfall	mg/dm2.day	0.43	0.43	0.10	0.10
Total Insoluble Dustfall	mg/dm2.day	0.43	0.43	0.10	0.10
Fixed Soluble Dustfall	mg/dm2.day	0.43	0.43	0.10	0.10
Volatile Soluble Dustfall	mg/dm2.day	0.43	0.43	0.10	0.10
Total Soluble Dustfall	mg/dm2.day	0.43	0.43	0.10	0.10
Metals (Dustfall)					
Aluminum (Al)-Total	mg/dm2.day	0.00017	0.00017	0.000057	0.000069
Antimony (Sb)-Total	mg/dm2.day	0.0000057	0.0000057	0.0000019	0.0000023
Arsenic (As)-Total	mg/dm2.day	0.0000057	0.0000057	0.0000019	0.0000023
Barium (Ba)-Total	mg/dm2.day	0.0000028	0.0000028	0.00000096	0.0000011
Beryllium (Be)-Total	mg/dm2.day	0.000028	0.000028	0.0000096	0.000011
Bismuth (Bi)-Total	mg/dm2.day	0.000028	0.000028	0.0000096	0.000011
Boron (B)-Total	mg/dm2.day	0.00057	0.00057	0.00019	0.00023
Cadmium (Cd)-Total	mg/dm2.day	0.0000028	0.0000028	0.00000096	0.0000011
Calcium (Ca)-Total	mg/dm2.day	0.0011	0.0011	0.00038	0.00046
Chromium (Cr)-Total	mg/dm2.day	0.000028	0.000028	0.0000096	0.000011
Cobalt (Co)-Total	mg/dm2.day	0.0000057	0.0000057	0.0000019	0.0000023
Copper (Cu)-Total	mg/dm2.day	0.000028	0.000028	0.0000096	0.000011
Iron (Fe)-Total	mg/dm2.day	0.0017	0.0017	0.00057	0.00069
Lead (Pb)-Total	mg/dm2.day	0.0000028	0.0000028	0.00000096	0.0000011
Lithium (Li)-Total	mg/dm2.day	0.00028	0.00028	0.000096	0.00011
Magnesium (Mg)-Total	mg/dm2.day	0.00028	0.00028	0.000096	0.00011
Manganese (Mn)-Total	mg/dm2.day	0.0000057	0.0000057	0.0000019	0.0000023
Molybdenum (Mo)-Total	mg/dm2.day	0.0000028	0.0000028	0.00000096	0.0000011
Nickel (Ni)-Total	mg/dm2.day	0.000028	0.000028	0.0000096	0.000011
Phosphorus (P)-Total	mg/dm2.day	0.0028	0.0028	0.00096	0.0011

Detection Limits L2555439

Job Reference NEW GOLD RRP
Report To Sarah Flesher, New Gold Inc. Rainy River Project
Date Received 8-Feb-2021 8:40
Report Date 4-Mar-2021 9:41
Report Version 1

Client Sample ID		SOUTH-TSP-341	SOUTH-TSP-342	SOUTH-TSP-343	SOUTH-TSP-344	SOUTH-TSP-345	NORTH-TSP-341	NORTH-TSP-342	NORTH-TSP-343	NORTH-TSP-344	NORTH-TSP-345	NORTHWEST-TSP-341	NORTHWEST-TSP-342	NORTHWEST-TSP-343
Date Sampled		4-Jan-2021	10-Jan-2021	16-Jan-2021	22-Jan-2021	28-Jan-2021	4-Jan-2021	10-Jan-2021	16-Jan-2021	22-Jan-2021	28-Jan-2021	4-Jan-2021	10-Jan-2021	16-Jan-2021
Time Sampled		0:00	0:00	0:00	0:00	0:00	0:00	0:00	0:00	0:00	0:00	0:00	0:00	0:00
ALS Sample ID		L2555439-1	L2555439-2	L2555439-3	L2555439-4	L2555439-5	L2555439-6	L2555439-7	L2555439-8	L2555439-9	L2555439-10	L2555439-11	L2555439-12	L2555439-13
Parameter	Units	Filter	Filter	Filter	Filter	Filter	Filter	Filter	Filter	Filter	Filter	Filter	Filter	Filter
Potassium (K)-Total	mg/dm2.day													
Selenium (Se)-Total	mg/dm2.day													
Silicon (Si)-Total	mg/dm2.day													
Silver (Ag)-Total	mg/dm2.day													
Sodium (Na)-Total	mg/dm2.day													
Strontium (Sr)-Total	mg/dm2.day													
Thallium (Tl)-Total	mg/dm2.day													
Tin (Sn)-Total	mg/dm2.day													
Titanium (Ti)-Total	mg/dm2.day													
Uranium (U)-Total	mg/dm2.day													
Vanadium (V)-Total	mg/dm2.day													
Zinc (Zn)-Total	mg/dm2.day													

Detection Limits L2555439

Job Reference NEW GOLD RRP
Report To Sarah Flesher, New Gold
Date Received 8-Feb-2021 8:40
Report Date 4-Mar-2021 9:41
Report Version 1

Client Sample ID		NORTHWEST-TSP-344	NORTHWEST-TSP-345	TRAVEL BLANK TSP	SOUTH-PM2.5-341	SOUTH-PM2.5-342	SOUTH-PM2.5-343	SOUTH-PM2.5-344	SOUTH-PM2.5-345	NORTH-PM2.5-341	NORTH-PM2.5-342	NORTH-PM2.5-343	NORTH-PM2.5-344
Date Sampled		22-Jan-2021	28-Jan-2021	2-Feb-2021	4-Jan-2021	10-Jan-2021	16-Jan-2021	22-Jan-2021	28-Jan-2021	4-Jan-2021	10-Jan-2021	16-Jan-2021	22-Jan-2021
Time Sampled		0:00	0:00	0:00	0:00	0:00	0:00	0:00	0:00	0:00	0:00	0:00	0:00
ALS Sample ID		L2555439-14	L2555439-15	L2555439-16	L2555439-17	L2555439-18	L2555439-19	L2555439-20	L2555439-21	L2555439-22	L2555439-23	L2555439-24	L2555439-25
Parameter	Units	Filter	Filter	Filter	Filter	Filter	Filter	Filter	Filter	Filter	Filter	Filter	Filter
Potassium (K)-Total	mg/dm2.day												
Selenium (Se)-Total	mg/dm2.day												
Silicon (Si)-Total	mg/dm2.day												
Silver (Ag)-Total	mg/dm2.day												
Sodium (Na)-Total	mg/dm2.day												
Strontium (Sr)-Total	mg/dm2.day												
Thallium (Tl)-Total	mg/dm2.day												
Tin (Sn)-Total	mg/dm2.day												
Titanium (Ti)-Total	mg/dm2.day												
Uranium (U)-Total	mg/dm2.day												
Vanadium (V)-Total	mg/dm2.day												
Zinc (Zn)-Total	mg/dm2.day												

Detection Limits L2555439

Job Reference NEW GOLD RRP
Report To Sarah Flesher, New Gold
Date Received 8-Feb-2021 8:40
Report Date 4-Mar-2021 9:41
Report Version 1

Client Sample ID		NORTH-PM2.5-345	NORTHWEST-PM2.5-341	NORTHWEST-PM2.5-342	NORTHWEST-PM2.5-343	NORTHWEST-PM2.5-344	NORTHWEST-PM2.5-345	TRAVEL BLANK PM2.5	NOP1-DUSTFALL-1	SPP1-DUSTFALL-8	WCD1-DUSTFALL-1	GH1-DUSTFALL-1	SPP1-DUSTFALL-4	SPP1-DUSTFALL-5
Date Sampled		28-Jan-2021	4-Jan-2021	10-Jan-2021	16-Jan-2021	22-Jan-2021	28-Jan-2021	2-Feb-2021	2-Feb-2021	3-Feb-2021	2-Feb-2021	3-Feb-2021	6-Jan-2021	13-Jan-2021
Time Sampled		0:00	0:00	0:00	0:00	0:00	0:00	0:00	0:00	0:00	0:00	0:00	0:00	0:00
ALS Sample ID		L2555439-26	L2555439-27	L2555439-28	L2555439-29	L2555439-30	L2555439-31	L2555439-32	L2555439-33	L2555439-34	L2555439-35	L2555439-36	L2555439-37	L2555439-38
Parameter	Units	Filter	Filter	Filter	Filter	Filter	Filter	Filter	Dustfall	Dustfall	Dustfall	Dustfall	Dustfall	Dustfall
Potassium (K)-Total	mg/dm2.day								0.00078	0.00087	0.00072	0.00090	0.0039	0.0028
Selenium (Se)-Total	mg/dm2.day								0.000016	0.000017	0.000014	0.000018	0.000077	0.000057
Silicon (Si)-Total	mg/dm2.day								0.00078	0.00087	0.00072	0.00090	0.0039	0.0028
Silver (Ag)-Total	mg/dm2.day								0.00000016	0.00000017	0.00000014	0.00000018	0.00000077	0.00000057
Sodium (Na)-Total	mg/dm2.day								0.00078	0.00087	0.00072	0.00090	0.0039	0.0028
Strontium (Sr)-Total	mg/dm2.day								0.0000016	0.0000017	0.0000014	0.0000018	0.0000077	0.0000057
Thallium (Tl)-Total	mg/dm2.day								0.0000016	0.0000017	0.0000014	0.0000018	0.0000077	0.0000057
Tin (Sn)-Total	mg/dm2.day								0.0000016	0.0000017	0.0000014	0.0000018	0.0000077	0.0000057
Titanium (Ti)-Total	mg/dm2.day								0.00016	0.00017	0.00014	0.00018	0.00077	0.00057
Uranium (U)-Total	mg/dm2.day								0.00000016	0.00000017	0.00000014	0.00000018	0.00000077	0.00000057
Vanadium (V)-Total	mg/dm2.day								0.000016	0.000017	0.000014	0.000018	0.000077	0.000057
Zinc (Zn)-Total	mg/dm2.day								0.000047	0.000052	0.000043	0.000054	0.00023	0.00017

Detection Limits L2555439

Job Reference NEW GOLD RRP
Report To Sarah Flesher, New Golc
Date Received 8-Feb-2021 8:40
Report Date 4-Mar-2021 9:41
Report Version 1

Client Sample ID		SPP1-DUSTFALL-6	SPP1-DUSTFALL-7	DUSTFALL-GALLINGER ROAD	DUSTFALL-TAIT ROAD (SOUTH)
Date Sampled		20-Jan-2021	27-Jan-2021	2-Feb-2021	2-Feb-2021
Time Sampled		0:00	0:00	0:00	0:00
ALS Sample ID		L2555439-39	L2555439-40	L2555439-41	L2555439-42
Parameter	Units	Dustfall	Dustfall	Dustfall	Dustfall
Potassium (K)-Total	mg/dm2.day	0.0028	0.0028	0.00096	0.0011
Selenium (Se)-Total	mg/dm2.day	0.000057	0.000057	0.000019	0.000023
Silicon (Si)-Total	mg/dm2.day	0.0028	0.0028	0.00096	0.0011
Silver (Ag)-Total	mg/dm2.day	0.00000057	0.00000057	0.00000019	0.00000023
Sodium (Na)-Total	mg/dm2.day	0.0028	0.0028	0.00096	0.0011
Strontium (Sr)-Total	mg/dm2.day	0.0000057	0.0000057	0.0000019	0.0000023
Thallium (Tl)-Total	mg/dm2.day	0.0000057	0.0000057	0.0000019	0.0000023
Tin (Sn)-Total	mg/dm2.day	0.0000057	0.0000057	0.0000019	0.0000023
Titanium (Ti)-Total	mg/dm2.day	0.00057	0.00057	0.00019	0.00023
Uranium (U)-Total	mg/dm2.day	0.00000057	0.00000057	0.00000019	0.00000023
Vanadium (V)-Total	mg/dm2.day	0.000057	0.000057	0.000019	0.000023
Zinc (Zn)-Total	mg/dm2.day	0.00017	0.00017	0.000057	0.000069

Report To	Sarah Flesher, New Gold Inc. Rainy River Project 5967 Highway 11/71 P.O. Box 5 Emo, ON P0W 1E0	**Date Received** **Report Date** **Report Revision** **Version**	11-Mar-2021 08:00 7-Apr-2021 11:40 1 FINAL
Client Phone	807-234-8200		

Certificate of Analysis

Lab Work Order #	L2565740
Project P.O. #	4500050093
Job Reference	
Legal Site Description	
C of C Numbers	

Case Narrative/Comments

Work Order Qualifiers:

Temperature - 21.6ºC °

Claire Kocharakkal, B.Sc.
Account Manager

[This report shall not be reproduced except in full without the written authority of the Laboratory.]

Results Summary L2565740

Job Reference
Report To Sarah Flesher, New Gold Inc. Rainy River Project
Date Received 11-Mar-2021 8:00
Report Date 7-Apr-2021 11:40
Report Version 1

Client Sample ID			SOUTH-TSP-346	SOUTH-TSP-347	SOUTH-TSP-348	SOUTH-TSP-349	SOUTH-TSP-350	NORTH-TSP-346	NORTH-TSP-347	NORTH-TSP-348	NORTH-TSP-349	NORTH-TSP-350	NORTHWEST-TSP-346	NORTHWEST-TSP-347
Date Sampled			2-Feb-2021	9-Feb-2021	15-Feb-2021	21-Feb-2021	27-Feb-2021	2-Feb-2021	9-Feb-2021	15-Feb-2021	21-Feb-2021	27-Feb-2021	2-Feb-2021	9-Feb-2021
Time Sampled			0:00	0:00	0:00	0:00	0:00	0:00	0:00	0:00	0:00	0:00	0:00	0:00
ALS Sample ID			L2565740-1	L2565740-2	L2565740-3	L2565740-4	L2565740-5	L2565740-6	L2565740-7	L2565740-8	L2565740-9	L2565740-10	L2565740-11	L2565740-12
Parameter	Lowest Detection Limit	Units	Filter	Filter	Filter	Filter	Filter	Filter	Filter	Filter	Filter	Filter	Filter	Filter
Particulates (Filter)														
Total particulate	15	ug	7600	22800	93300	18100	160000	17200	166000	82300	37600	27200	17700	19500
Total Metals (Filter)														
Arsenic (As)	3.0	ug	<3.0	<3.0	<3.0	<3.0	<3.0	<3.0	4.6	<3.0	<3.0	<3.0	<3.0	<3.0
Cadmium (Cd)	2.0	ug	<2.0	<2.0	<2.0	<2.0	<2.0	<2.0	<2.0	<2.0	<2.0	<2.0	<2.0	<2.0
Chromium (Cr)	5.0	ug	<5.0	5.0	9.0	<5.0	10.7	<5.0	8.1	6.6	5.1	8.2	5.3	5.4
Cobalt (Co)	2.0	ug	<2.0	<2.0	2.1	<2.0	2.6	<2.0	<2.0	<2.0	<2.0	<2.0	<2.0	<2.0
Copper (Cu)	4.0	ug	27.5	36.2	63.9	24.9	63.9	69.3	90.0	140	120	232	115	98.1
Iron (Fe)	20	ug	117	432	3540	152	4490	267	2180	1990	473	729	191	333
Lead (Pb)	3.0	ug	<3.0	<3.0	5.3	<3.0	9.2	4.0	29.7	7.0	3.2	<3.0	3.0	<3.0
Manganese (Mn)	1.0	ug	3.5	14.8	110	6.5	146	9.0	113	68.0	16.6	22.0	7.3	12.2
Nickel (Ni)	3.0	ug	<3.0	<3.0	6.2	<3.0	7.1	<3.0	4.9	4.2	<3.0	4.1	3.2	<3.0
Selenium (Se)	10	ug	<10	<10	<10	<10	<10	<10	<10	<10	<10	<10	<10	<10
Vanadium (V)	5.0	ug	<5.0	<5.0	7.2	<5.0	8.1	<5.0	<5.0	<5.0	<5.0	<5.0	<5.0	<5.0
Zinc (Zn)	5.0	ug	18.4	16.5	55.8	15.8	72.9	26.5	244	53.1	34.9	21.7	24.2	9.6
Particulates (Dustfall)														
Fixed Dustfall	0.11	mg/dm2.day												
Volatile Dustfall	0.11	mg/dm2.day												
Total Dustfall	0.11	mg/dm2.day												
Fixed Insoluble Dustfall	0.11	mg/dm2.day												
Volatile Insoluble Dustfall	0.11	mg/dm2.day												
Total Insoluble Dustfall	0.11	mg/dm2.day												
Fixed Soluble Dustfall	0.11	mg/dm2.day												
Volatile Soluble Dustfall	0.11	mg/dm2.day												
Total Soluble Dustfall	0.11	mg/dm2.day												
Metals (Dustfall)														
Aluminum (Al)-Total	0.000043	mg/dm2.day												
Antimony (Sb)-Total	0.0000014	mg/dm2.day												
Arsenic (As)-Total	0.0000014	mg/dm2.day												
Barium (Ba)-Total	0.00000071	mg/dm2.day												
Beryllium (Be)-Total	0.0000071	mg/dm2.day												
Bismuth (Bi)-Total	0.0000071	mg/dm2.day												
Boron (B)-Total	0.00014	mg/dm2.day												
Cadmium (Cd)-Total	0.00000071	mg/dm2.day												
Calcium (Ca)-Total	0.00028	mg/dm2.day												
Chromium (Cr)-Total	0.0000071	mg/dm2.day												
Cobalt (Co)-Total	0.0000014	mg/dm2.day												
Copper (Cu)-Total	0.0000071	mg/dm2.day												
Iron (Fe)-Total	0.00043	mg/dm2.day												
Lead (Pb)-Total	0.00000071	mg/dm2.day												
Lithium (Li)-Total	0.000071	mg/dm2.day												
Magnesium (Mg)-Total	0.000071	mg/dm2.day												
Manganese (Mn)-Total	0.0000014	mg/dm2.day												
Molybdenum (Mo)-Total	0.00000071	mg/dm2.day												
Nickel (Ni)-Total	0.0000071	mg/dm2.day												

Results Summary L2565740

Job Reference
Report To Sarah Flesher, New Gold Inc. Rainy River Proj
Date Received 11-Mar-2021 8:00
Report Date 7-Apr-2021 11:40
Report Version 1

Client Sample ID			NORTHWEST-TSP-348	NORTHWEST-TSP-349	NORTHWEST-TSP-350	TSP-TRAVEL BLANK	SOUTH-PM2.5-346	SOUTH-PM2.5-347	SOUTH-PM2.5-348	SOUTH-PM2.5-349	SOUTH-PM2.5-350	NORTH-PM2.5-346	NORTH-PM2.5-347
Date Sampled			15-Feb-2021	21-Feb-2021	27-Feb-2021	3-Mar-2021	2-Feb-2021	9-Feb-2021	15-Feb-2021	21-Feb-2021	27-Feb-2021	2-Feb-2021	9-Feb-2021
Time Sampled			0:00	0:00	0:00	0:00	0:00	0:00	0:00	0:00	0:00	0:00	0:00
ALS Sample ID			L2565740-13	L2565740-14	L2565740-15	L2565740-16	L2565740-17	L2565740-18	L2565740-19	L2565740-20	L2565740-21	L2565740-22	L2565740-23
Parameter	Lowest Detection Limit	Units	Filter	Filter	Filter	Filter	Filter	Filter	Filter	Filter	Filter	Filter	Filter
Particulates (Filter)													
Total particulate	15	ug	19300	35500	13700	<2300	245	183	52	437	113	206	181
Total Metals (Filter)													
Arsenic (As)	3.0	ug	<3.0	<3.0	<3.0	<3.0							
Cadmium (Cd)	2.0	ug	<2.0	<2.0	<2.0	<2.0							
Chromium (Cr)	5.0	ug	5.4	6.3	7.2	<5.0							
Cobalt (Co)	2.0	ug	<2.0	<2.0	<2.0	<2.0							
Copper (Cu)	4.0	ug	103	106	119	<4.0							
Iron (Fe)	20	ug	536	639	265	42							
Lead (Pb)	3.0	ug	<3.0	<3.0	<3.0	<3.0							
Manganese (Mn)	1.0	ug	17.9	23.1	5.9	<1.0							
Nickel (Ni)	3.0	ug	<3.0	3.2	3.6	<3.0							
Selenium (Se)	10	ug	<10	<10	<10	<10							
Vanadium (V)	5.0	ug	<5.0	<5.0	<5.0	<5.0							
Zinc (Zn)	5.0	ug	14.3	23.7	6.6	<5.0							
Particulates (Dustfall)													
Fixed Dustfall	0.11	mg/dm2.day											
Volatile Dustfall	0.11	mg/dm2.day											
Total Dustfall	0.11	mg/dm2.day											
Fixed Insoluble Dustfall	0.11	mg/dm2.day											
Volatile Insoluble Dustfall	0.11	mg/dm2.day											
Total Insoluble Dustfall	0.11	mg/dm2.day											
Fixed Soluble Dustfall	0.11	mg/dm2.day											
Volatile Soluble Dustfall	0.11	mg/dm2.day											
Total Soluble Dustfall	0.11	mg/dm2.day											
Metals (Dustfall)													
Aluminum (Al)-Total	0.000043	mg/dm2.day											
Antimony (Sb)-Total	0.0000014	mg/dm2.day											
Arsenic (As)-Total	0.0000014	mg/dm2.day											
Barium (Ba)-Total	0.00000071	mg/dm2.day											
Beryllium (Be)-Total	0.0000071	mg/dm2.day											
Bismuth (Bi)-Total	0.0000071	mg/dm2.day											
Boron (B)-Total	0.00014	mg/dm2.day											
Cadmium (Cd)-Total	0.00000071	mg/dm2.day											
Calcium (Ca)-Total	0.00028	mg/dm2.day											
Chromium (Cr)-Total	0.0000071	mg/dm2.day											
Cobalt (Co)-Total	0.0000014	mg/dm2.day											
Copper (Cu)-Total	0.0000071	mg/dm2.day											
Iron (Fe)-Total	0.00043	mg/dm2.day											
Lead (Pb)-Total	0.00000071	mg/dm2.day											
Lithium (Li)-Total	0.000071	mg/dm2.day											
Magnesium (Mg)-Total	0.000071	mg/dm2.day											
Manganese (Mn)-Total	0.0000014	mg/dm2.day											
Molybdenum (Mo)-Total	0.00000071	mg/dm2.day											
Nickel (Ni)-Total	0.0000071	mg/dm2.day											

Results Summary L2565740

Job Reference
Report To Sarah Flesher, New Gold Inc. Rainy River Proj
Date Received 11-Mar-2021 8:00
Report Date 7-Apr-2021 11:40
Report Version 1

Client Sample ID			NORTH-PM2.5-348	NORTH-PM2.5-349	NORTH-PM2.5-350	NORTHWEST-PM2.5-346	NORTHWEST-PM2.5-347	NORTHWEST-PM2.5-348	NORTHWEST-PM2.5-349	NORTHWEST-PM2.5-350	PM2.5-TRAVEL BLANK	NOP1-DUSTFALL-2	CP1-DUSTFALL-2	WCP1-DUSTFALL-2
Date Sampled			15-Feb-2021	21-Feb-2021	27-Feb-2021	2-Feb-2021	9-Feb-2021	15-Feb-2021	21-Feb-2021	27-Feb-2021	3-Mar-2021	2-Mar-2021	2-Mar-2021	2-Mar-2021
Time Sampled			0:00	0:00	0:00	0:00	0:00	0:00	0:00	0:00	0:00	0:00	0:00	0:00
ALS Sample ID			L2565740-24	L2565740-25	L2565740-26	L2565740-27	L2565740-28	L2565740-29	L2565740-30	L2565740-31	L2565740-32	L2565740-33	L2565740-34	L2565740-35
Parameter	Lowest Detection Limit	Units	Filter	Filter	Filter	Filter	Filter	Filter	Filter	Filter	Filter	Dustfall	Dustfall	Dustfall
Particulates (Filter)														
Total particulate	15	ug	81	445	70	214	119	79	352	76	<15			
Total Metals (Filter)														
Arsenic (As)	3.0	ug												
Cadmium (Cd)	2.0	ug												
Chromium (Cr)	5.0	ug												
Cobalt (Co)	2.0	ug												
Copper (Cu)	4.0	ug												
Iron (Fe)	20	ug												
Lead (Pb)	3.0	ug												
Manganese (Mn)	1.0	ug												
Nickel (Ni)	3.0	ug												
Selenium (Se)	10	ug												
Vanadium (V)	5.0	ug												
Zinc (Zn)	5.0	ug												
Particulates (Dustfall)														
Fixed Dustfall	0.11	mg/dm2.day										10.1	1.13	<0.11
Volatile Dustfall	0.11	mg/dm2.day										<0.11	0.12	0.15
Total Dustfall	0.11	mg/dm2.day										10.2	1.24	0.15
Fixed Insoluble Dustfall	0.11	mg/dm2.day										9.94	1.07	<0.11
Volatile Insoluble Dustfall	0.11	mg/dm2.day										<0.11	<0.11	<0.11
Total Insoluble Dustfall	0.11	mg/dm2.day										9.94	1.07	<0.11
Fixed Soluble Dustfall	0.11	mg/dm2.day										0.18	<0.11	<0.11
Volatile Soluble Dustfall	0.11	mg/dm2.day										<0.11	0.12	0.15
Total Soluble Dustfall	0.11	mg/dm2.day										0.26	0.17	0.15
Metals (Dustfall)														
Aluminum (Al)-Total	0.000043	mg/dm2.day										0.178	0.0188	0.000190
Antimony (Sb)-Total	0.0000014	mg/dm2.day										0.0000126	0.0000029	<0.0000062
Arsenic (As)-Total	0.0000014	mg/dm2.day										0.000145	<0.000028	<0.0000062
Barium (Ba)-Total	0.00000071	mg/dm2.day										0.000649	0.000106	0.0000016
Beryllium (Be)-Total	0.0000071	mg/dm2.day										<0.0000071	<0.0000071	<0.000015
Bismuth (Bi)-Total	0.0000071	mg/dm2.day										<0.0000071	<0.0000071	<0.000015
Boron (B)-Total	0.00014	mg/dm2.day										<0.00014	<0.00014	<0.00031
Cadmium (Cd)-Total	0.00000071	mg/dm2.day										0.0000191	0.00000473	<0.0000015
Calcium (Ca)-Total	0.00028	mg/dm2.day										0.421	0.0394	<0.0012
Chromium (Cr)-Total	0.0000071	mg/dm2.day										0.000276	0.0000276	<0.000015
Cobalt (Co)-Total	0.0000014	mg/dm2.day										0.000100	0.0000076	<0.0000031
Copper (Cu)-Total	0.0000071	mg/dm2.day										0.000477	0.000225	<0.000015
Iron (Fe)-Total	0.00043	mg/dm2.day										0.245	0.0192	<0.00093
Lead (Pb)-Total	0.00000071	mg/dm2.day										0.000534	0.000144	<0.0000015
Lithium (Li)-Total	0.000071	mg/dm2.day										0.000421	<0.000071	<0.00015
Magnesium (Mg)-Total	0.000071	mg/dm2.day										0.101	0.00853	<0.00015
Manganese (Mn)-Total	0.0000014	mg/dm2.day										0.00872	0.00101	0.0000077
Molybdenum (Mo)-Total	0.00000071	mg/dm2.day										0.0000180	0.00000791	<0.0000015
Nickel (Ni)-Total	0.0000071	mg/dm2.day										0.000231	0.0000215	<0.000015

Results Summary L2565740

Job Reference
Report To Sarah Flesher, New Gold Inc. Rainy River Proj
Date Received 11-Mar-2021 8:00
Report Date 7-Apr-2021 11:40
Report Version 1

Client Sample ID			GH1-DUSTFALL-2	SPP1-DUSTFALL-9	SPP1-DUSTFALL-10	SPP1-DUSTFALL-11	SPP1-DUSTFALL-12	DUSTFALL-GALLINGER ROAD	DUSTFALL-TAIT ROAD (SOUTH)	DUSTFALL-NORTHWEST
Date Sampled			2-Mar-2021	10-Feb-2021	17-Feb-2021	24-Feb-2021	3-Mar-2021	2-Mar-2021	2-Mar-2021	2-Mar-2021
Time Sampled			0:00	0:00	0:00	0:00	0:00	0:00	0:00	0:00
ALS Sample ID			L2565740-36	L2565740-37	L2565740-38	L2565740-39	L2565740-40	L2565740-41	L2565740-42	L2565740-43
Parameter	Lowest Detection Limit	Units	Dustfall	Dustfall	Dustfall	Dustfall	Dustfall	Dustfall	Dustfall	Dustfall
Particulates (Filter)										
Total particulate	15	ug								
Total Metals (Filter)										
Arsenic (As)	3.0	ug								
Cadmium (Cd)	2.0	ug								
Chromium (Cr)	5.0	ug								
Cobalt (Co)	2.0	ug								
Copper (Cu)	4.0	ug								
Iron (Fe)	20	ug								
Lead (Pb)	3.0	ug								
Manganese (Mn)	1.0	ug								
Nickel (Ni)	3.0	ug								
Selenium (Se)	10	ug								
Vanadium (V)	5.0	ug								
Zinc (Zn)	5.0	ug								
Particulates (Dustfall)										
Fixed Dustfall	0.11	mg/dm2.day	2.06	27.5	17.4	7.02	23.4	0.75	0.60	<0.12
Volatile Dustfall	0.11	mg/dm2.day	<0.11	0.58	0.48	<0.43	0.79	<0.11	<0.11	<0.12
Total Dustfall	0.11	mg/dm2.day	2.12	28.1	17.8	7.02	24.2	0.81	0.65	<0.12
Fixed Insoluble Dustfall	0.11	mg/dm2.day	1.78	27.1	17.0	6.55	22.8	0.73	0.55	<0.12
Volatile Insoluble Dustfall	0.11	mg/dm2.day	<0.11	<0.43	<0.43	<0.43	0.57	<0.11	<0.11	<0.12
Total Insoluble Dustfall	0.11	mg/dm2.day	1.78	27.2	17.0	6.55	23.4	0.73	0.55	<0.12
Fixed Soluble Dustfall	0.11	mg/dm2.day	0.28	<0.43	<0.43	0.47	0.62	<0.11	<0.11	<0.12
Volatile Soluble Dustfall	0.11	mg/dm2.day	<0.11	0.50	0.48	<0.43	<0.43	<0.11	<0.11	<0.12
Total Soluble Dustfall	0.11	mg/dm2.day	0.34	0.89	0.81	0.47	0.84	<0.11	<0.11	<0.12
Metals (Dustfall)										
Aluminum (Al)-Total	0.000043	mg/dm2.day	0.0494	0.142	0.135	0.0625	0.166	0.0150	0.0127	0.00302
Antimony (Sb)-Total	0.0000014	mg/dm2.day	0.0000038	0.000111	0.0000609	0.0000166	0.0000311	0.0000022	0.0000014	<0.0000015
Arsenic (As)-Total	0.0000014	mg/dm2.day	<0.000044	<0.0018	<0.00069	<0.00017	<0.00040	<0.000028	<0.000011	<0.0000015
Barium (Ba)-Total	0.00000071	mg/dm2.day	0.000179	0.00173	0.00111	0.000406	0.00114	0.0000808	0.0000578	0.0000266
Beryllium (Be)-Total	0.0000071	mg/dm2.day	<0.0000074	<0.000044	<0.000049	<0.000028	<0.000028	<0.0000071	<0.0000071	<0.0000076
Bismuth (Bi)-Total	0.0000071	mg/dm2.day	<0.0000074	<0.000044	<0.000049	<0.000028	0.000045	<0.0000071	<0.0000071	<0.0000076
Boron (B)-Total	0.00014	mg/dm2.day	<0.00015	<0.00088	<0.00098	<0.00057	<0.00057	<0.00014	<0.00014	<0.00015
Cadmium (Cd)-Total	0.00000071	mg/dm2.day	0.00000246	0.000281	0.000156	0.0000359	0.0000602	0.00000375	0.00000114	<0.00000076
Calcium (Ca)-Total	0.00028	mg/dm2.day	0.144	0.316	0.266	0.173	0.438	0.0298	0.0284	0.00806
Chromium (Cr)-Total	0.0000071	mg/dm2.day	0.0000640	0.000165	0.000123	0.000080	0.000255	0.0000227	0.0000179	<0.0000076
Cobalt (Co)-Total	0.0000014	mg/dm2.day	0.0000251	0.0000820	0.0000680	0.0000280	0.0000821	0.0000073	0.0000077	0.0000016
Copper (Cu)-Total	0.0000071	mg/dm2.day	0.000127	0.00146	0.000831	0.000383	0.000860	0.0000693	0.0000416	0.0000180
Iron (Fe)-Total	0.00043	mg/dm2.day	0.0639	0.222	0.195	0.0735	0.203	0.0168	0.0149	0.00352
Lead (Pb)-Total	0.00000071	mg/dm2.day	0.0000667	0.00429	0.00368	0.000879	0.00160	0.000127	0.0000352	0.00000720
Lithium (Li)-Total	0.000071	mg/dm2.day	0.000110	<0.00044	<0.00049	<0.00028	<0.00028	<0.000071	<0.000071	<0.000076
Magnesium (Mg)-Total	0.000071	mg/dm2.day	0.0267	0.0571	0.0556	0.0302	0.130	0.00731	0.00668	0.00237
Manganese (Mn)-Total	0.0000014	mg/dm2.day	0.00231	0.0191	0.0118	0.00602	0.00961	0.000771	0.000563	0.000128
Molybdenum (Mo)-Total	0.00000071	mg/dm2.day	0.00000342	0.0000144	0.0000103	0.0000078	0.0000134	0.00000209	0.00000157	<0.00000076
Nickel (Ni)-Total	0.0000071	mg/dm2.day	0.0000638	0.000137	0.000116	0.000066	0.000238	0.0000200	0.0000181	<0.0000076

Results Summary L2565740

Job Reference
Report To Sarah Flesher, New Gold Inc. Rainy River Project
Date Received 11-Mar-2021 8:00
Report Date 7-Apr-2021 11:40
Report Version 1

Client Sample ID			SOUTH-TSP-346	SOUTH-TSP-347	SOUTH-TSP-348	SOUTH-TSP-349	SOUTH-TSP-350	NORTH-TSP-346	NORTH-TSP-347	NORTH-TSP-348	NORTH-TSP-349	NORTH-TSP-350	NORTHWEST-TSP-346	NORTHWEST-TSP-347
Date Sampled			2-Feb-2021	9-Feb-2021	15-Feb-2021	21-Feb-2021	27-Feb-2021	2-Feb-2021	9-Feb-2021	15-Feb-2021	21-Feb-2021	27-Feb-2021	2-Feb-2021	9-Feb-2021
Time Sampled			0:00	0:00	0:00	0:00	0:00	0:00	0:00	0:00	0:00	0:00	0:00	0:00
ALS Sample ID			L2565740-1	L2565740-2	L2565740-3	L2565740-4	L2565740-5	L2565740-6	L2565740-7	L2565740-8	L2565740-9	L2565740-10	L2565740-11	L2565740-12
Parameter	Lowest Detection Limit	Units	Filter	Filter	Filter	Filter	Filter	Filter	Filter	Filter	Filter	Filter	Filter	Filter
Phosphorus (P)-Total	0.00071	mg/dm2.day												
Potassium (K)-Total	0.00071	mg/dm2.day												
Selenium (Se)-Total	0.000014	mg/dm2.day												
Silicon (Si)-Total	0.00071	mg/dm2.day												
Silver (Ag)-Total	0.00000014	mg/dm2.day												
Sodium (Na)-Total	0.00071	mg/dm2.day												
Strontium (Sr)-Total	0.0000014	mg/dm2.day												
Thallium (Tl)-Total	0.0000014	mg/dm2.day												
Tin (Sn)-Total	0.0000014	mg/dm2.day												
Titanium (Ti)-Total	0.00014	mg/dm2.day												
Uranium (U)-Total	0.00000014	mg/dm2.day												
Vanadium (V)-Total	0.000014	mg/dm2.day												
Zinc (Zn)-Total	0.000043	mg/dm2.day												

Qualifier Legend

DLB	Detection Limit Raised. Analyte detected at comparable level in Method Blank.
DLDF	Detection Limit Raised: Dustfall sample isopropanol preservative caused matrix interference on Arsenic and Selenium.
RRV	Reported Result Verified By Repeat Analysis
DLM	Detection Limit Adjusted due to sample matrix effects (e.g. chemical interference, colour, turbidity).

Results Summary L2565740

Job Reference
Report To Sarah Flesher, New Gold Inc. Rainy River Proj
Date Received 11-Mar-2021 8:00
Report Date 7-Apr-2021 11:40
Report Version 1

Client Sample ID			NORTHWEST-TSP-348	NORTHWEST-TSP-349	NORTHWEST-TSP-350	TSP-TRAVEL BLANK	SOUTH-PM2.5-346	SOUTH-PM2.5-347	SOUTH-PM2.5-348	SOUTH-PM2.5-349	SOUTH-PM2.5-350	NORTH-PM2.5-346	NORTH-PM2.5-347
Date Sampled			15-Feb-2021	21-Feb-2021	27-Feb-2021	3-Mar-2021	2-Feb-2021	9-Feb-2021	15-Feb-2021	21-Feb-2021	27-Feb-2021	2-Feb-2021	9-Feb-2021
Time Sampled			0:00	0:00	0:00	0:00	0:00	0:00	0:00	0:00	0:00	0:00	0:00
ALS Sample ID			L2565740-13	L2565740-14	L2565740-15	L2565740-16	L2565740-17	L2565740-18	L2565740-19	L2565740-20	L2565740-21	L2565740-22	L2565740-23
Parameter	Lowest Detection Limit	Units	Filter	Filter	Filter	Filter	Filter	Filter	Filter	Filter	Filter	Filter	Filter
Phosphorus (P)-Total	0.00071	mg/dm2.day											
Potassium (K)-Total	0.00071	mg/dm2.day											
Selenium (Se)-Total	0.000014	mg/dm2.day											
Silicon (Si)-Total	0.00071	mg/dm2.day											
Silver (Ag)-Total	0.00000014	mg/dm2.day											
Sodium (Na)-Total	0.00071	mg/dm2.day											
Strontium (Sr)-Total	0.0000014	mg/dm2.day											
Thallium (Tl)-Total	0.0000014	mg/dm2.day											
Tin (Sn)-Total	0.0000014	mg/dm2.day											
Titanium (Ti)-Total	0.00014	mg/dm2.day											
Uranium (U)-Total	0.00000014	mg/dm2.day											
Vanadium (V)-Total	0.000014	mg/dm2.day											
Zinc (Zn)-Total	0.000043	mg/dm2.day											

Qualifier Legend

DLB	Detection Limit Raised. Analyte detected at cc
DLDF	Detection Limit Raised: Dustfall sample isopro
RRV	Reported Result Verified By Repeat Analysis
DLM	Detection Limit Adjusted due to sample matrix

Results Summary L2565740

Job Reference
Report To Sarah Flesher, New Gold Inc. Rainy River Proj
Date Received 11-Mar-2021 8:00
Report Date 7-Apr-2021 11:40
Report Version 1

Client Sample ID			NORTH-PM2.5-348	NORTH-PM2.5-349	NORTH-PM2.5-350	NORTHWEST-PM2.5-346	NORTHWEST-PM2.5-347	NORTHWEST-PM2.5-348	NORTHWEST-PM2.5-349	NORTHWEST-PM2.5-350	PM2.5-TRAVEL BLANK	NOP1-DUSTFALL-2	CP1-DUSTFALL-2	WCP1-DUSTFALL-2
Date Sampled			15-Feb-2021	21-Feb-2021	27-Feb-2021	2-Feb-2021	9-Feb-2021	15-Feb-2021	21-Feb-2021	27-Feb-2021	3-Mar-2021	2-Mar-2021	2-Mar-2021	2-Mar-2021
Time Sampled			0:00	0:00	0:00	0:00	0:00	0:00	0:00	0:00	0:00	0:00	0:00	0:00
ALS Sample ID			L2565740-24	L2565740-25	L2565740-26	L2565740-27	L2565740-28	L2565740-29	L2565740-30	L2565740-31	L2565740-32	L2565740-33	L2565740-34	L2565740-35
Parameter	Lowest Detection Limit	Units	Filter	Filter	Filter	Filter	Filter	Filter	Filter	Filter	Filter	Dustfall	Dustfall	Dustfall
Phosphorus (P)-Total	0.00071	mg/dm2.day										0.00466	<0.00071	<0.0015
Potassium (K)-Total	0.00071	mg/dm2.day										0.0316	0.00592	<0.0015
Selenium (Se)-Total	0.000014	mg/dm2.day										<0.000014	<0.000014	<0.000031
Silicon (Si)-Total	0.00071	mg/dm2.day										0.237	0.0269	<0.0015
Silver (Ag)-Total	0.00000014	mg/dm2.day										0.0000130	0.00000153	<0.00000031
Sodium (Na)-Total	0.00071	mg/dm2.day										0.0171	0.00237	<0.0015
Strontium (Sr)-Total	0.0000014	mg/dm2.day										0.000664	0.0000818	<0.0000031
Thallium (Tl)-Total	0.0000014	mg/dm2.day										<0.0000014	<0.0000014	<0.0000031
Tin (Sn)-Total	0.0000014	mg/dm2.day										<0.0000043	<0.0000014	<0.0000031
Titanium (Ti)-Total	0.00014	mg/dm2.day										0.00313	0.00036	<0.00031
Uranium (U)-Total	0.00000014	mg/dm2.day										0.00000213	0.00000034	<0.00000031
Vanadium (V)-Total	0.000014	mg/dm2.day										0.000440	0.000035	<0.000031
Zinc (Zn)-Total	0.000043	mg/dm2.day										0.00480	0.00143	<0.000093

Qualifier Legend

DLB	Detection Limit Raised. Analyte detected at cc
DLDF	Detection Limit Raised: Dustfall sample isoprop
RRV	Reported Result Verified By Repeat Analysis
DLM	Detection Limit Adjusted due to sample matrix

Results Summary L2565740

Job Reference
Report To Sarah Flesher, New Gold Inc. Rainy River Proj
Date Received 11-Mar-2021 8:00
Report Date 7-Apr-2021 11:40
Report Version 1

Client Sample ID			GH1-DUSTFALL-2	SPP1-DUSTFALL-9	SPP1-DUSTFALL-10	SPP1-DUSTFALL-11	SPP1-DUSTFALL-12	DUSTFALL-GALLINGER ROAD	DUSTFALL-TAIT ROAD (SOUTH)	DUSTFALL-NORTHWEST
Date Sampled			2-Mar-2021	10-Feb-2021	17-Feb-2021	24-Feb-2021	3-Mar-2021	2-Mar-2021	2-Mar-2021	2-Mar-2021
Time Sampled			0:00	0:00	0:00	0:00	0:00	0:00	0:00	0:00
ALS Sample ID			L2565740-36	L2565740-37	L2565740-38	L2565740-39	L2565740-40	L2565740-41	L2565740-42	L2565740-43
Parameter	Lowest Detection Limit	Units	Dustfall	Dustfall	Dustfall	Dustfall	Dustfall	Dustfall	Dustfall	Dustfall
Phosphorus (P)-Total	0.00071	mg/dm2.day	0.00087	0.0088	0.0078	<0.0028	0.0080	<0.00071	<0.00071	<0.00076
Potassium (K)-Total	0.00071	mg/dm2.day	0.00808	0.0960	0.0561	0.0206	0.0486	0.00432	0.00228	<0.00076
Selenium (Se)-Total	0.000014	mg/dm2.day	<0.000015	<0.000088	<0.000098	<0.000057	<0.000057	<0.000014	<0.000014	<0.000015
Silicon (Si)-Total	0.00071	mg/dm2.day	0.0627	0.232	0.168	0.0807	0.273	0.0205	0.0152	0.00429
Silver (Ag)-Total	0.00000014	mg/dm2.day	0.00000178	0.0000667	0.0000651	0.0000108	0.0000250	0.00000105	0.00000077	<0.00000015
Sodium (Na)-Total	0.00071	mg/dm2.day	0.00554	0.0066	0.0081	0.0052	0.0118	0.00257	0.00190	0.00164
Strontium (Sr)-Total	0.0000014	mg/dm2.day	0.000211	0.00137	0.000817	0.000361	0.000715	0.0000682	0.0000529	0.0000142
Thallium (Tl)-Total	0.0000014	mg/dm2.day	<0.0000015	<0.0000088	<0.0000098	<0.0000057	<0.0000057	<0.0000014	<0.0000014	<0.0000015
Tin (Sn)-Total	0.0000014	mg/dm2.day	<0.0000015	<0.0000088	<0.0000098	<0.0000057	<0.0000057	<0.0000014	<0.0000014	<0.0000015
Titanium (Ti)-Total	0.00014	mg/dm2.day	<0.00088	0.00283	0.00217	0.00100	0.00441	0.00030	0.00027	<0.00015
Uranium (U)-Total	0.00000014	mg/dm2.day	0.00000066	0.00000725	0.00000568	0.00000164	0.00000735	0.00000032	0.00000018	<0.00000015
Vanadium (V)-Total	0.000014	mg/dm2.day	0.000116	0.000131	0.000129	0.000089	0.000331	0.000029	0.000027	<0.000015
Zinc (Zn)-Total	0.000043	mg/dm2.day	0.000692	0.0685	0.0391	0.00860	0.0143	0.000898	0.000283	0.000065

Qualifier Legend

DLB	Detection Limit Raised. Analyte detected at cc
DLDF	Detection Limit Raised: Dustfall sample isoprop
RRV	Reported Result Verified By Repeat Analysis
DLM	Detection Limit Adjusted due to sample matrix

Quality Control L2565740

Job Reference
Report To Sarah Flesher, New Gold Inc. Rainy River Project
Date Received 11-Mar-2021 8:00
Report Date 7-Apr-2021 11:40
Report Version 1

QC Type	Analyte	QC Lot #	ALS QC ID	Result	Target	Units	%	Limit	Units	Qual	Eval	Matrix	Class
Total Metals (Filter)													
LCS	Arsenic (As)	1450240	WG3504574-2	45.5	45	ug	101.0	80-120	%		✓	Filter	Total Metals
LCS	Cadmium (Cd)	1450240	WG3504574-2	24.1	22.5	ug	107.0	80-120	%		✓	Filter	Total Metals
LCS	Chromium (Cr)	1450240	WG3504574-2	46.4	45	ug	103.0	80-120	%		✓	Filter	Total Metals
LCS	Cobalt (Co)	1450240	WG3504574-2	44.8	45	ug	99.5	80-120	%		✓	Filter	Total Metals
LCS	Copper (Cu)	1450240	WG3504574-2	46.4	45	ug	103.0	80-120	%		✓	Filter	Total Metals
LCS	Iron (Fe)	1450240	WG3504574-2	225	225	ug	100.0	80-120	%		✓	Filter	Total Metals
LCS	Lead (Pb)	1450240	WG3504574-2	46.4	45	ug	103.0	80-120	%		✓	Filter	Total Metals
LCS	Manganese (Mn)	1450240	WG3504574-2	44.2	45	ug	98.2	80-120	%		✓	Filter	Total Metals
LCS	Nickel (Ni)	1450240	WG3504574-2	45.9	45	ug	102.0	80-120	%		✓	Filter	Total Metals
LCS	Selenium (Se)	1450240	WG3504574-2	45.5	45	ug	101.0	80-120	%		✓	Filter	Total Metals
LCS	Vanadium (V)	1450240	WG3504574-2	48.2	45	ug	107.0	80-120	%		✓	Filter	Total Metals
LCS	Zinc (Zn)	1450240	WG3504574-2	92.3	90	ug	102.5	80-120	%		✓	Filter	Total Metals
Particulates (Filter)													
MB	Total particulate	1450110	WG3504402-1	<100		ug	-	<100	ug		✓	Filter	Particulates
MB	Total particulate	1450111	WG3504402-4	<15		ug	-	<15	ug		✓	Filter	Particulates
Total Metals (Filter)													
MB	Arsenic (As)	1450240	WG3504574-1	<3.0		ug	-	<3.0	ug		✓	Filter	Total Metals
MB	Cadmium (Cd)	1450240	WG3504574-1	<0.027		ug	-	<0.027	ug		✓	Filter	Total Metals
MB	Chromium (Cr)	1450240	WG3504574-1	<3.4		ug	-	<3.4	ug		✓	Filter	Total Metals
MB	Cobalt (Co)	1450240	WG3504574-1	<0.030		ug	-	<0.030	ug		✓	Filter	Total Metals
MB	Copper (Cu)	1450240	WG3504574-1	<1.0		ug	-	<1.0	ug		✓	Filter	Total Metals
MB	Iron (Fe)	1450240	WG3504574-1	<12		ug	-	<12	ug		✓	Filter	Total Metals
MB	Lead (Pb)	1450240	WG3504574-1	<0.12		ug	-	<0.12	ug		✓	Filter	Total Metals
MB	Manganese (Mn)	1450240	WG3504574-1	<0.45		ug	-	<0.45	ug		✓	Filter	Total Metals
MB	Nickel (Ni)	1450240	WG3504574-1	<0.25		ug	-	<0.25	ug		✓	Filter	Total Metals
MB	Selenium (Se)	1450240	WG3504574-1	<1.3		ug	-	<1.3	ug		✓	Filter	Total Metals
MB	Vanadium (V)	1450240	WG3504574-1	<5.0		ug	-	<10.0	ug		✓	Filter	Total Metals
MB	Zinc (Zn)	1450240	WG3504574-1	<4.5		ug	-	<4.5	ug		✓	Filter	Total Metals
MS	Arsenic (As)	1450240	SOUTH-TSP-346	43.9	45.4	ug	96.6	75-125	%		✓	Filter	Total Metals
MS	Cadmium (Cd)	1450240	SOUTH-TSP-346	23.3	22.7	ug	102.7	75-125	%		✓	Filter	Total Metals
MS	Chromium (Cr)	1450240	SOUTH-TSP-346	51.3	49.3	ug	104.5	75-125	%		✓	Filter	Total Metals
MS	Cobalt (Co)	1450240	SOUTH-TSP-346	44.0	45.6	ug	96.4	75-125	%		✓	Filter	Total Metals
MS	Copper (Cu)	1450240	SOUTH-TSP-346	77.9	72.5	ug	112.0	75-125	%		✓	Filter	Total Metals
MS	Iron (Fe)	1450240	SOUTH-TSP-346	369	342	ug	112.0	75-125	%		✓	Filter	Total Metals
MS	Lead (Pb)	1450240	SOUTH-TSP-346	45.9	46.9	ug	97.8	75-125	%		✓	Filter	Total Metals
MS	Manganese (Mn)	1450240	SOUTH-TSP-346	45.9	48.5	ug	94.1	75-125	%		✓	Filter	Total Metals
MS	Nickel (Ni)	1450240	SOUTH-TSP-346	46.8	47.2	ug	99.0	75-125	%		✓	Filter	Total Metals
MS	Selenium (Se)	1450240	SOUTH-TSP-346	43.4	45.4	ug	95.6	75-125	%		✓	Filter	Total Metals
MS	Vanadium (V)	1450240	SOUTH-TSP-346	45.9	45.3	ug	101.4	75-125	%		✓	Filter	Total Metals
MS	Zinc (Zn)	1450240	SOUTH-TSP-346	110	108	ug	101.6	75-125	%		✓	Filter	Total Metals
Metals (Dustfall)													
LCS	Aluminum (Al)-Total	1456139	WG3511663-2	0.0532	0.0524	mg/dm2.day	101.6	80-120	%		✓	Dustfall	Metals
LCS	Aluminum (Al)-Total	1456135	WG3511664-2	0.0533	0.0524	mg/dm2.day	101.7	80-120	%		✓	Dustfall	Metals
LCS	Aluminum (Al)-Total	1456871	WG3512913-2	0.0524	0.0524	mg/dm2.day	100.1	80-120	%		✓	Dustfall	Metals
LCS	Aluminum (Al)-Total	1456873	WG3512914-4	0.0516	0.0524	mg/dm2.day	98.5	80-120	%		✓	Dustfall	Metals
LCS	Antimony (Sb)-Total	1456139	WG3511663-2	0.0273	0.0262	mg/dm2.day	104.3	80-120	%		✓	Dustfall	Metals
LCS	Antimony (Sb)-Total	1456135	WG3511664-2	0.0271	0.0262	mg/dm2.day	103.3	80-120	%		✓	Dustfall	Metals
LCS	Antimony (Sb)-Total	1456871	WG3512913-2	0.0284	0.0262	mg/dm2.day	108.2	80-120	%		✓	Dustfall	Metals
LCS	Antimony (Sb)-Total	1456873	WG3512914-4	0.0259	0.0262	mg/dm2.day	99.0	80-120	%		✓	Dustfall	Metals
LCS	Arsenic (As)-Total	1456139	WG3511663-2	0.0264	0.0262	mg/dm2.day	100.8	80-120	%		✓	Dustfall	Metals
LCS	Arsenic (As)-Total	1456135	WG3511664-2	0.0264	0.0262	mg/dm2.day	100.6	80-120	%		✓	Dustfall	Metals
LCS	Arsenic (As)-Total	1456871	WG3512913-2	0.0259	0.0262	mg/dm2.day	98.8	80-120	%		✓	Dustfall	Metals
LCS	Arsenic (As)-Total	1456873	WG3512914-4	0.0263	0.0262	mg/dm2.day	100.2	80-120	%		✓	Dustfall	Metals
LCS	Barium (Ba)-Total	1456139	WG3511663-2	0.00660	0.00655	mg/dm2.day	100.8	80-120	%		✓	Dustfall	Metals
LCS	Barium (Ba)-Total	1456135	WG3511664-2	0.00691	0.00655	mg/dm2.day	105.4	80-120	%		✓	Dustfall	Metals
LCS	Barium (Ba)-Total	1456871	WG3512913-2	0.00628	0.00655	mg/dm2.day	95.9	80-120	%		✓	Dustfall	Metals
LCS	Barium (Ba)-Total	1456873	WG3512914-4	0.00619	0.00655	mg/dm2.day	94.5	80-120	%		✓	Dustfall	Metals
LCS	Beryllium (Be)-Total	1456139	WG3511663-2	0.00273	0.00262	mg/dm2.day	104.1	80-120	%		✓	Dustfall	Metals
LCS	Beryllium (Be)-Total	1456135	WG3511664-2	0.00277	0.00262	mg/dm2.day	105.8	80-120	%		✓	Dustfall	Metals
LCS	Beryllium (Be)-Total	1456871	WG3512913-2	0.00255	0.00262	mg/dm2.day	97.4	80-120	%		✓	Dustfall	Metals
LCS	Beryllium (Be)-Total	1456873	WG3512914-4	0.00246	0.00262	mg/dm2.day	93.8	80-120	%		✓	Dustfall	Metals
LCS	Bismuth (Bi)-Total	1456139	WG3511663-2	0.0283	0.0262	mg/dm2.day	108.2	80-120	%		✓	Dustfall	Metals
LCS	Bismuth (Bi)-Total	1456135	WG3511664-2	0.0279	0.0262	mg/dm2.day	106.4	80-120	%		✓	Dustfall	Metals
LCS	Bismuth (Bi)-Total	1456871	WG3512913-2	0.0271	0.0262	mg/dm2.day	103.3	80-120	%		✓	Dustfall	Metals
LCS	Bismuth (Bi)-Total	1456873	WG3512914-4	0.0268	0.0262	mg/dm2.day	102.5	80-120	%		✓	Dustfall	Metals
LCS	Boron (B)-Total	1456139	WG3511663-2	0.0265	0.0262	mg/dm2.day	101.3	80-120	%		✓	Dustfall	Metals
LCS	Boron (B)-Total	1456135	WG3511664-2	0.0266	0.0262	mg/dm2.day	101.5	80-120	%		✓	Dustfall	Metals
LCS	Boron (B)-Total	1456871	WG3512913-2	0.0253	0.0262	mg/dm2.day	96.4	80-120	%		✓	Dustfall	Metals
LCS	Boron (B)-Total	1456873	WG3512914-4	0.0249	0.0262	mg/dm2.day	94.9	80-120	%		✓	Dustfall	Metals
LCS	Cadmium (Cd)-Total	1456139	WG3511663-2	0.00253	0.00262	mg/dm2.day	96.7	80-120	%		✓	Dustfall	Metals
LCS	Cadmium (Cd)-Total	1456135	WG3511664-2	0.00268	0.00262	mg/dm2.day	102.3	80-120	%		✓	Dustfall	Metals
LCS	Cadmium (Cd)-Total	1456871	WG3512913-2	0.00259	0.00262	mg/dm2.day	98.9	80-120	%		✓	Dustfall	Metals
LCS	Cadmium (Cd)-Total	1456873	WG3512914-4	0.00255	0.00262	mg/dm2.day	97.5	80-120	%		✓	Dustfall	Metals
LCS	Calcium (Ca)-Total	1456139	WG3511663-2	1.36	1.31	mg/dm2.day	103.7	80-120	%		✓	Dustfall	Metals
LCS	Calcium (Ca)-Total	1456135	WG3511664-2	1.39	1.31	mg/dm2.day	106.2	80-120	%		✓	Dustfall	Metals
LCS	Calcium (Ca)-Total	1456871	WG3512913-2	1.32	1.31	mg/dm2.day	100.4	80-120	%		✓	Dustfall	Metals
LCS	Calcium (Ca)-Total	1456873	WG3512914-4	1.29	1.31	mg/dm2.day	98.2	80-120	%		✓	Dustfall	Metals
LCS	Chromium (Cr)-Total	1456139	WG3511663-2	0.00637	0.00655	mg/dm2.day	97.2	80-120	%		✓	Dustfall	Metals
LCS	Chromium (Cr)-Total	1456135	WG3511664-2	0.00631	0.00655	mg/dm2.day	96.3	80-120	%		✓	Dustfall	Metals
LCS	Chromium (Cr)-Total	1456871	WG3512913-2	0.00639	0.00655	mg/dm2.day	97.5	80-120	%		✓	Dustfall	Metals
LCS	Chromium (Cr)-Total	1456873	WG3512914-4	0.00642	0.00655	mg/dm2.day	98.0	80-120	%		✓	Dustfall	Metals
LCS	Cobalt (Co)-Total	1456139	WG3511663-2	0.00668	0.00655	mg/dm2.day	102.0	80-120	%		✓	Dustfall	Metals
LCS	Cobalt (Co)-Total	1456135	WG3511664-2	0.00668	0.00655	mg/dm2.day	102.0	80-120	%		✓	Dustfall	Metals

Quality Control L2565740

Job Reference
Report To Sarah Flesher, New Gold Inc. Rainy River Project
Date Received 11-Mar-2021 8:00
Report Date 7-Apr-2021 11:40
Report Version 1

QC Type	Analyte	QC Lot #	ALS QC ID	Result	Target	Units	%	Limit	Units	Qual	Eval	Matrix	Class
LCS	Cobalt (Co)-Total	1456871	WG3512913-2	0.00662	0.00655	mg/dm2.day	101.1	80-120	%		✓	Dustfall	Metals
LCS	Cobalt (Co)-Total	1456873	WG3512914-4	0.00660	0.00655	mg/dm2.day	100.7	80-120	%		✓	Dustfall	Metals
LCS	Copper (Cu)-Total	1456139	WG3511663-2	0.00643	0.00655	mg/dm2.day	98.2	80-120	%		✓	Dustfall	Metals
LCS	Copper (Cu)-Total	1456135	WG3511664-2	0.00653	0.00655	mg/dm2.day	99.7	80-120	%		✓	Dustfall	Metals
LCS	Copper (Cu)-Total	1456871	WG3512913-2	0.00661	0.00655	mg/dm2.day	100.9	80-120	%		✓	Dustfall	Metals
LCS	Copper (Cu)-Total	1456873	WG3512914-4	0.00670	0.00655	mg/dm2.day	102.3	80-120	%		✓	Dustfall	Metals
LCS	Iron (Fe)-Total	1456139	WG3511663-2	0.0257	0.0262	mg/dm2.day	97.9	80-120	%		✓	Dustfall	Metals
LCS	Iron (Fe)-Total	1456135	WG3511664-2	0.0260	0.0262	mg/dm2.day	99.4	80-120	%		✓	Dustfall	Metals
LCS	Iron (Fe)-Total	1456871	WG3512913-2	0.0284	0.0262	mg/dm2.day	108.3	80-120	%		✓	Dustfall	Metals
LCS	Iron (Fe)-Total	1456873	WG3512914-4	0.0265	0.0262	mg/dm2.day	101.0	80-120	%		✓	Dustfall	Metals
LCS	Lead (Pb)-Total	1456139	WG3511663-2	0.0136	0.0131	mg/dm2.day	103.8	80-120	%		✓	Dustfall	Metals
LCS	Lead (Pb)-Total	1456135	WG3511664-2	0.0135	0.0131	mg/dm2.day	103.0	80-120	%		✓	Dustfall	Metals
LCS	Lead (Pb)-Total	1456871	WG3512913-2	0.0135	0.0131	mg/dm2.day	102.8	80-120	%		✓	Dustfall	Metals
LCS	Lead (Pb)-Total	1456873	WG3512914-4	0.0128	0.0131	mg/dm2.day	97.9	80-120	%		✓	Dustfall	Metals
LCS	Lithium (Li)-Total	1456139	WG3511663-2	0.00660	0.00655	mg/dm2.day	100.8	80-120	%		✓	Dustfall	Metals
LCS	Lithium (Li)-Total	1456135	WG3511664-2	0.00675	0.00655	mg/dm2.day	103.1	80-120	%		✓	Dustfall	Metals
LCS	Lithium (Li)-Total	1456871	WG3512913-2	0.00589	0.00655	mg/dm2.day	89.9	80-120	%		✓	Dustfall	Metals
LCS	Lithium (Li)-Total	1456873	WG3512914-4	0.00575	0.00655	mg/dm2.day	87.8	80-120	%		✓	Dustfall	Metals
LCS	Magnesium (Mg)-Total	1456139	WG3511663-2	1.32	1.31	mg/dm2.day	101.1	80-120	%		✓	Dustfall	Metals
LCS	Magnesium (Mg)-Total	1456135	WG3511664-2	1.32	1.31	mg/dm2.day	100.8	80-120	%		✓	Dustfall	Metals
LCS	Magnesium (Mg)-Total	1456871	WG3512913-2	1.30	1.31	mg/dm2.day	98.9	80-120	%		✓	Dustfall	Metals
LCS	Magnesium (Mg)-Total	1456873	WG3512914-4	1.32	1.31	mg/dm2.day	101.1	80-120	%		✓	Dustfall	Metals
LCS	Manganese (Mn)-Total	1456139	WG3511663-2	0.00664	0.00655	mg/dm2.day	101.3	80-120	%		✓	Dustfall	Metals
LCS	Manganese (Mn)-Total	1456135	WG3511664-2	0.00666	0.00655	mg/dm2.day	101.7	80-120	%		✓	Dustfall	Metals
LCS	Manganese (Mn)-Total	1456871	WG3512913-2	0.00638	0.00655	mg/dm2.day	97.3	80-120	%		✓	Dustfall	Metals
LCS	Manganese (Mn)-Total	1456873	WG3512914-4	0.00643	0.00655	mg/dm2.day	98.1	80-120	%		✓	Dustfall	Metals
LCS	Molybdenum (Mo)-Total	1456139	WG3511663-2	0.00680	0.00655	mg/dm2.day	103.8	80-120	%		✓	Dustfall	Metals
LCS	Molybdenum (Mo)-Total	1456135	WG3511664-2	0.00669	0.00655	mg/dm2.day	102.1	80-120	%		✓	Dustfall	Metals
LCS	Molybdenum (Mo)-Total	1456871	WG3512913-2	0.00657	0.00655	mg/dm2.day	100.3	80-120	%		✓	Dustfall	Metals
LCS	Molybdenum (Mo)-Total	1456873	WG3512914-4	0.00631	0.00655	mg/dm2.day	96.4	80-120	%		✓	Dustfall	Metals
LCS	Nickel (Ni)-Total	1456139	WG3511663-2	0.0128	0.0131	mg/dm2.day	97.8	80-120	%		✓	Dustfall	Metals
LCS	Nickel (Ni)-Total	1456135	WG3511664-2	0.0129	0.0131	mg/dm2.day	98.7	80-120	%		✓	Dustfall	Metals
LCS	Nickel (Ni)-Total	1456871	WG3512913-2	0.0127	0.0131	mg/dm2.day	96.6	80-120	%		✓	Dustfall	Metals
LCS	Nickel (Ni)-Total	1456873	WG3512914-4	0.0129	0.0131	mg/dm2.day	98.8	80-120	%		✓	Dustfall	Metals
LCS	Phosphorus (P)-Total	1456139	WG3511663-2	0.256	0.262	mg/dm2.day	97.6	80-120	%		✓	Dustfall	Metals
LCS	Phosphorus (P)-Total	1456135	WG3511664-2	0.258	0.262	mg/dm2.day	98.5	80-120	%		✓	Dustfall	Metals
LCS	Phosphorus (P)-Total	1456871	WG3512913-2	0.264	0.262	mg/dm2.day	101.0	80-120	%		✓	Dustfall	Metals
LCS	Phosphorus (P)-Total	1456873	WG3512914-4	0.269	0.262	mg/dm2.day	102.8	80-120	%		✓	Dustfall	Metals
LCS	Potassium (K)-Total	1456139	WG3511663-2	1.36	1.31	mg/dm2.day	103.8	80-120	%		✓	Dustfall	Metals
LCS	Potassium (K)-Total	1456135	WG3511664-2	1.34	1.31	mg/dm2.day	102.2	80-120	%		✓	Dustfall	Metals
LCS	Potassium (K)-Total	1456871	WG3512913-2	1.38	1.31	mg/dm2.day	105.4	80-120	%		✓	Dustfall	Metals
LCS	Potassium (K)-Total	1456873	WG3512914-4	1.40	1.31	mg/dm2.day	107.1	80-120	%		✓	Dustfall	Metals
LCS	Selenium (Se)-Total	1456139	WG3511663-2	0.0269	0.0262	mg/dm2.day	102.8	80-120	%		✓	Dustfall	Metals
LCS	Selenium (Se)-Total	1456135	WG3511664-2	0.0268	0.0262	mg/dm2.day	102.3	80-120	%		✓	Dustfall	Metals
LCS	Selenium (Se)-Total	1456871	WG3512913-2	0.0256	0.0262	mg/dm2.day	97.7	80-120	%		✓	Dustfall	Metals
LCS	Selenium (Se)-Total	1456873	WG3512914-4	0.0283	0.0262	mg/dm2.day	107.8	80-120	%		✓	Dustfall	Metals
LCS	Silicon (Si)-Total	1456139	WG3511663-2	0.265	0.262	mg/dm2.day	101.0	80-120	%		✓	Dustfall	Metals
LCS	Silicon (Si)-Total	1456135	WG3511664-2	0.260	0.262	mg/dm2.day	99.1	80-120	%		✓	Dustfall	Metals
LCS	Silicon (Si)-Total	1456871	WG3512913-2	0.257	0.262	mg/dm2.day	98.2	80-120	%		✓	Dustfall	Metals
LCS	Silicon (Si)-Total	1456873	WG3512914-4	0.267	0.262	mg/dm2.day	102.0	80-120	%		✓	Dustfall	Metals
LCS	Silver (Ag)-Total	1456139	WG3511663-2	0.00266	0.00262	mg/dm2.day	101.6	80-120	%		✓	Dustfall	Metals
LCS	Silver (Ag)-Total	1456135	WG3511664-2	0.00263	0.00262	mg/dm2.day	100.4	80-120	%		✓	Dustfall	Metals
LCS	Silver (Ag)-Total	1456871	WG3512913-2	0.00250	0.00262	mg/dm2.day	95.6	80-120	%		✓	Dustfall	Metals
LCS	Silver (Ag)-Total	1456873	WG3512914-4	0.00239	0.00262	mg/dm2.day	91.4	80-120	%		✓	Dustfall	Metals
LCS	Sodium (Na)-Total	1456139	WG3511663-2	1.32	1.31	mg/dm2.day	100.9	80-120	%		✓	Dustfall	Metals
LCS	Sodium (Na)-Total	1456135	WG3511664-2	1.31	1.31	mg/dm2.day	100.1	80-120	%		✓	Dustfall	Metals
LCS	Sodium (Na)-Total	1456871	WG3512913-2	1.41	1.31	mg/dm2.day	107.7	80-120	%		✓	Dustfall	Metals
LCS	Sodium (Na)-Total	1456873	WG3512914-4	1.37	1.31	mg/dm2.day	104.9	80-120	%		✓	Dustfall	Metals
LCS	Strontium (Sr)-Total	1456139	WG3511663-2	0.00673	0.00655	mg/dm2.day	102.7	80-120	%		✓	Dustfall	Metals
LCS	Strontium (Sr)-Total	1456135	WG3511664-2	0.00659	0.00655	mg/dm2.day	100.6	80-120	%		✓	Dustfall	Metals
LCS	Strontium (Sr)-Total	1456871	WG3512913-2	0.00639	0.00655	mg/dm2.day	97.6	80-120	%		✓	Dustfall	Metals
LCS	Strontium (Sr)-Total	1456873	WG3512914-4	0.00611	0.00655	mg/dm2.day	93.3	80-120	%		✓	Dustfall	Metals
LCS	Thallium (Tl)-Total	1456139	WG3511663-2	0.0273	0.0262	mg/dm2.day	104.2	80-120	%		✓	Dustfall	Metals
LCS	Thallium (Tl)-Total	1456135	WG3511664-2	0.0265	0.0262	mg/dm2.day	101.2	80-120	%		✓	Dustfall	Metals
LCS	Thallium (Tl)-Total	1456871	WG3512913-2	0.0264	0.0262	mg/dm2.day	100.7	80-120	%		✓	Dustfall	Metals
LCS	Thallium (Tl)-Total	1456873	WG3512914-4	0.0266	0.0262	mg/dm2.day	101.4	80-120	%		✓	Dustfall	Metals
LCS	Tin (Sn)-Total	1456139	WG3511663-2	0.0126	0.0131	mg/dm2.day	96.6	80-120	%		✓	Dustfall	Metals
LCS	Tin (Sn)-Total	1456135	WG3511664-2	0.0130	0.0131	mg/dm2.day	99.4	80-120	%		✓	Dustfall	Metals
LCS	Tin (Sn)-Total	1456871	WG3512913-2	0.0124	0.0131	mg/dm2.day	94.9	80-120	%		✓	Dustfall	Metals
LCS	Tin (Sn)-Total	1456873	WG3512914-4	0.0120	0.0131	mg/dm2.day	91.3	80-120	%		✓	Dustfall	Metals
LCS	Titanium (Ti)-Total	1456139	WG3511663-2	0.00652	0.00655	mg/dm2.day	99.5	80-120	%		✓	Dustfall	Metals
LCS	Titanium (Ti)-Total	1456135	WG3511664-2	0.00655	0.00655	mg/dm2.day	99.9	80-120	%		✓	Dustfall	Metals
LCS	Titanium (Ti)-Total	1456871	WG3512913-2	0.00636	0.00655	mg/dm2.day	97.2	80-120	%		✓	Dustfall	Metals
LCS	Titanium (Ti)-Total	1456873	WG3512914-4	0.00633	0.00655	mg/dm2.day	96.6	80-120	%		✓	Dustfall	Metals
LCS	Uranium (U)-Total	1456139	WG3511663-2	0.000136	0.000131	mg/dm2.day	103.7	80-120	%		✓	Dustfall	Metals
LCS	Uranium (U)-Total	1456135	WG3511664-2	0.000132	0.000131	mg/dm2.day	100.8	80-120	%		✓	Dustfall	Metals
LCS	Uranium (U)-Total	1456871	WG3512913-2	0.000132	0.000131	mg/dm2.day	100.8	80-120	%		✓	Dustfall	Metals
LCS	Uranium (U)-Total	1456873	WG3512914-4	0.000125	0.000131	mg/dm2.day	95.2	80-120	%		✓	Dustfall	Metals
LCS	Vanadium (V)-Total	1456139	WG3511663-2	0.0132	0.0131	mg/dm2.day	100.8	80-120	%		✓	Dustfall	Metals
LCS	Vanadium (V)-Total	1456135	WG3511664-2	0.0131	0.0131	mg/dm2.day	99.96	80-120	%		✓	Dustfall	Metals
LCS	Vanadium (V)-Total	1456871	WG3512913-2	0.0130	0.0131	mg/dm2.day	99.6	80-120	%		✓	Dustfall	Metals
LCS	Vanadium (V)-Total	1456873	WG3512914-4	0.0131	0.0131	mg/dm2.day	100.3	80-120	%		✓	Dustfall	Metals
LCS	Zinc (Zn)-Total	1456139	WG3511663-2	0.0135	0.0131	mg/dm2.day	103.3	80-120	%		✓	Dustfall	Metals
LCS	Zinc (Zn)-Total	1456135	WG3511664-2	0.0138	0.0131	mg/dm2.day	105.3	80-120	%		✓	Dustfall	Metals
LCS	Zinc (Zn)-Total	1456871	WG3512913-2	0.0125	0.0131	mg/dm2.day	95.3	80-120	%		✓	Dustfall	Metals
LCS	Zinc (Zn)-Total	1456873	WG3512914-4	0.0130	0.0131	mg/dm2.day	98.9	80-120	%		✓	Dustfall	Metals
Particulates (Dustfall)													
MB	Fixed Dustfall	1455936	WG3511746-1	<0.10		mg/dm2.day	-	<0.10	mg/dm2.day		✓	Dustfall	Particulates

Quality Control L2565740

Job Reference
Report To Sarah Flesher, New Gold Inc. Rainy River Project
Date Received 11-Mar-2021 8:00
Report Date 7-Apr-2021 11:40
Report Version 1

QC Type	Analyte	QC Lot #	ALS QC ID	Result	Target	Units	%	Limit	Units	Qual	Eval	Matrix	Class
MB	Volatile Dustfall	1455936	WG3511746-1	<0.10		mg/dm2.day	-	<0.10	mg/dm2.day		✓	Dustfall	Particulates
MB	Total Dustfall	1455936	WG3511746-1	<0.10		mg/dm2.day	-	<0.10	mg/dm2.day		✓	Dustfall	Particulates
MB	Fixed Insoluble Dustfall	1455936	WG3511746-1	<0.10		mg/dm2.day	-	<0.10	mg/dm2.day		✓	Dustfall	Particulates
MB	Volatile Insoluble Dustfall	1455936	WG3511746-1	<0.10		mg/dm2.day	-	<0.10	mg/dm2.day		✓	Dustfall	Particulates
MB	Total Insoluble Dustfall	1455936	WG3511746-1	<0.10		mg/dm2.day	-	<0.10	mg/dm2.day		✓	Dustfall	Particulates
MB	Fixed Soluble Dustfall	1455936	WG3511746-1	<0.10		mg/dm2.day	-	<0.10	mg/dm2.day		✓	Dustfall	Particulates
MB	Volatile Soluble Dustfall	1455936	WG3511746-1	<0.10		mg/dm2.day	-	<0.10	mg/dm2.day		✓	Dustfall	Particulates
MB	Total Soluble Dustfall	1455936	WG3511746-1	<0.10		mg/dm2.day	-	<0.10	mg/dm2.day		✓	Dustfall	Particulates
Metals (Dustfall)													
MB	Aluminum (Al)-Total	1456139	WG3511663-1	0.000227		mg/dm2.day	-	<0.000079	mg/dm2.day	B	×	Dustfall	Metals
MB	Aluminum (Al)-Total	1456135	WG3511664-1	<0.000079		mg/dm2.day	-	<0.000079	mg/dm2.day		✓	Dustfall	Metals
MB	Aluminum (Al)-Total	1456871	WG3512913-1	0.000095		mg/dm2.day	-	<0.000079	mg/dm2.day	B	×	Dustfall	Metals
MB	Aluminum (Al)-Total	1456873	WG3512914-3	<0.000079		mg/dm2.day	-	<0.000079	mg/dm2.day		✓	Dustfall	Metals
MB	Antimony (Sb)-Total	1456139	WG3511663-1	<0.0000026		mg/dm2.day	-	<0.0000026	mg/dm2.day		✓	Dustfall	Metals
MB	Antimony (Sb)-Total	1456135	WG3511664-1	<0.0000026		mg/dm2.day	-	<0.0000026	mg/dm2.day		✓	Dustfall	Metals
MB	Antimony (Sb)-Total	1456871	WG3512913-1	0.0000041		mg/dm2.day	-	<0.0000026	mg/dm2.day	B	×	Dustfall	Metals
MB	Antimony (Sb)-Total	1456873	WG3512914-3	<0.0000026		mg/dm2.day	-	<0.0000026	mg/dm2.day		✓	Dustfall	Metals
MB	Arsenic (As)-Total	1456139	WG3511663-1	<0.0000026		mg/dm2.day	-	<0.0000026	mg/dm2.day		✓	Dustfall	Metals
MB	Arsenic (As)-Total	1456135	WG3511664-1	<0.0000026		mg/dm2.day	-	<0.0000026	mg/dm2.day		✓	Dustfall	Metals
MB	Arsenic (As)-Total	1456871	WG3512913-1	<0.0000026		mg/dm2.day	-	<0.0000026	mg/dm2.day		✓	Dustfall	Metals
MB	Arsenic (As)-Total	1456873	WG3512914-3	<0.0000026		mg/dm2.day	-	<0.0000026	mg/dm2.day		✓	Dustfall	Metals
MB	Barium (Ba)-Total	1456139	WG3511663-1	<0.0000013		mg/dm2.day	-	<0.0000013	mg/dm2.day		✓	Dustfall	Metals
MB	Barium (Ba)-Total	1456135	WG3511664-1	<0.0000013		mg/dm2.day	-	<0.0000013	mg/dm2.day		✓	Dustfall	Metals
MB	Barium (Ba)-Total	1456871	WG3512913-1	<0.0000013		mg/dm2.day	-	<0.0000013	mg/dm2.day		✓	Dustfall	Metals
MB	Barium (Ba)-Total	1456873	WG3512914-3	<0.0000013		mg/dm2.day	-	<0.0000013	mg/dm2.day		✓	Dustfall	Metals
MB	Beryllium (Be)-Total	1456139	WG3511663-1	<0.000013		mg/dm2.day	-	<0.000013	mg/dm2.day		✓	Dustfall	Metals
MB	Beryllium (Be)-Total	1456135	WG3511664-1	<0.000013		mg/dm2.day	-	<0.000013	mg/dm2.day		✓	Dustfall	Metals
MB	Beryllium (Be)-Total	1456871	WG3512913-1	<0.000013		mg/dm2.day	-	<0.000013	mg/dm2.day		✓	Dustfall	Metals
MB	Beryllium (Be)-Total	1456873	WG3512914-3	<0.000013		mg/dm2.day	-	<0.000013	mg/dm2.day		✓	Dustfall	Metals
MB	Bismuth (Bi)-Total	1456139	WG3511663-1	<0.000013		mg/dm2.day	-	<0.000013	mg/dm2.day		✓	Dustfall	Metals
MB	Bismuth (Bi)-Total	1456135	WG3511664-1	<0.000013		mg/dm2.day	-	<0.000013	mg/dm2.day		✓	Dustfall	Metals
MB	Bismuth (Bi)-Total	1456871	WG3512913-1	<0.000013		mg/dm2.day	-	<0.000013	mg/dm2.day		✓	Dustfall	Metals
MB	Bismuth (Bi)-Total	1456873	WG3512914-3	<0.000013		mg/dm2.day	-	<0.000013	mg/dm2.day		✓	Dustfall	Metals
MB	Boron (B)-Total	1456139	WG3511663-1	<0.00026		mg/dm2.day	-	<0.00026	mg/dm2.day		✓	Dustfall	Metals
MB	Boron (B)-Total	1456135	WG3511664-1	<0.00026		mg/dm2.day	-	<0.00026	mg/dm2.day		✓	Dustfall	Metals
MB	Boron (B)-Total	1456871	WG3512913-1	<0.00026		mg/dm2.day	-	<0.00026	mg/dm2.day		✓	Dustfall	Metals
MB	Boron (B)-Total	1456873	WG3512914-3	<0.00026		mg/dm2.day	-	<0.00026	mg/dm2.day		✓	Dustfall	Metals
MB	Cadmium (Cd)-Total	1456139	WG3511663-1	<0.0000013		mg/dm2.day	-	<0.0000013	mg/dm2.day		✓	Dustfall	Metals
MB	Cadmium (Cd)-Total	1456135	WG3511664-1	<0.0000013		mg/dm2.day	-	<0.0000013	mg/dm2.day		✓	Dustfall	Metals
MB	Cadmium (Cd)-Total	1456871	WG3512913-1	<0.0000013		mg/dm2.day	-	<0.0000013	mg/dm2.day		✓	Dustfall	Metals
MB	Cadmium (Cd)-Total	1456873	WG3512914-3	<0.0000013		mg/dm2.day	-	<0.0000013	mg/dm2.day		✓	Dustfall	Metals
MB	Calcium (Ca)-Total	1456139	WG3511663-1	<0.00052		mg/dm2.day	-	<0.00052	mg/dm2.day		✓	Dustfall	Metals
MB	Calcium (Ca)-Total	1456135	WG3511664-1	<0.00052		mg/dm2.day	-	<0.00052	mg/dm2.day		✓	Dustfall	Metals
MB	Calcium (Ca)-Total	1456871	WG3512913-1	<0.00052		mg/dm2.day	-	<0.00052	mg/dm2.day		✓	Dustfall	Metals
MB	Calcium (Ca)-Total	1456873	WG3512914-3	<0.00052		mg/dm2.day	-	<0.00052	mg/dm2.day		✓	Dustfall	Metals
MB	Chromium (Cr)-Total	1456139	WG3511663-1	<0.000013		mg/dm2.day	-	<0.000013	mg/dm2.day		✓	Dustfall	Metals
MB	Chromium (Cr)-Total	1456135	WG3511664-1	<0.000013		mg/dm2.day	-	<0.000013	mg/dm2.day		✓	Dustfall	Metals
MB	Chromium (Cr)-Total	1456871	WG3512913-1	<0.000013		mg/dm2.day	-	<0.000013	mg/dm2.day		✓	Dustfall	Metals
MB	Chromium (Cr)-Total	1456873	WG3512914-3	<0.000013		mg/dm2.day	-	<0.000013	mg/dm2.day		✓	Dustfall	Metals
MB	Cobalt (Co)-Total	1456139	WG3511663-1	<0.0000026		mg/dm2.day	-	<0.0000026	mg/dm2.day		✓	Dustfall	Metals
MB	Cobalt (Co)-Total	1456135	WG3511664-1	<0.0000026		mg/dm2.day	-	<0.0000026	mg/dm2.day		✓	Dustfall	Metals
MB	Cobalt (Co)-Total	1456871	WG3512913-1	<0.0000026		mg/dm2.day	-	<0.0000026	mg/dm2.day		✓	Dustfall	Metals
MB	Cobalt (Co)-Total	1456873	WG3512914-3	<0.0000026		mg/dm2.day	-	<0.0000026	mg/dm2.day		✓	Dustfall	Metals
MB	Copper (Cu)-Total	1456139	WG3511663-1	<0.000013		mg/dm2.day	-	<0.000013	mg/dm2.day		✓	Dustfall	Metals
MB	Copper (Cu)-Total	1456135	WG3511664-1	<0.000013		mg/dm2.day	-	<0.000013	mg/dm2.day		✓	Dustfall	Metals
MB	Copper (Cu)-Total	1456871	WG3512913-1	<0.000013		mg/dm2.day	-	<0.000013	mg/dm2.day		✓	Dustfall	Metals
MB	Copper (Cu)-Total	1456873	WG3512914-3	<0.000013		mg/dm2.day	-	<0.000013	mg/dm2.day		✓	Dustfall	Metals
MB	Iron (Fe)-Total	1456139	WG3511663-1	<0.00079		mg/dm2.day	-	<0.00079	mg/dm2.day		✓	Dustfall	Metals
MB	Iron (Fe)-Total	1456135	WG3511664-1	<0.00079		mg/dm2.day	-	<0.00079	mg/dm2.day		✓	Dustfall	Metals
MB	Iron (Fe)-Total	1456871	WG3512913-1	<0.00079		mg/dm2.day	-	<0.00079	mg/dm2.day		✓	Dustfall	Metals
MB	Iron (Fe)-Total	1456873	WG3512914-3	<0.00079		mg/dm2.day	-	<0.00079	mg/dm2.day		✓	Dustfall	Metals
MB	Lead (Pb)-Total	1456139	WG3511663-1	<0.0000013		mg/dm2.day	-	<0.0000013	mg/dm2.day		✓	Dustfall	Metals
MB	Lead (Pb)-Total	1456135	WG3511664-1	<0.0000013		mg/dm2.day	-	<0.0000013	mg/dm2.day		✓	Dustfall	Metals
MB	Lead (Pb)-Total	1456871	WG3512913-1	<0.0000013		mg/dm2.day	-	<0.0000013	mg/dm2.day		✓	Dustfall	Metals
MB	Lead (Pb)-Total	1456873	WG3512914-3	<0.0000013		mg/dm2.day	-	<0.0000013	mg/dm2.day		✓	Dustfall	Metals
MB	Lithium (Li)-Total	1456139	WG3511663-1	<0.00013		mg/dm2.day	-	<0.00013	mg/dm2.day		✓	Dustfall	Metals
MB	Lithium (Li)-Total	1456135	WG3511664-1	<0.00013		mg/dm2.day	-	<0.00013	mg/dm2.day		✓	Dustfall	Metals
MB	Lithium (Li)-Total	1456871	WG3512913-1	<0.00013		mg/dm2.day	-	<0.00013	mg/dm2.day		✓	Dustfall	Metals
MB	Lithium (Li)-Total	1456873	WG3512914-3	<0.00013		mg/dm2.day	-	<0.00013	mg/dm2.day		✓	Dustfall	Metals
MB	Magnesium (Mg)-Total	1456139	WG3511663-1	<0.00013		mg/dm2.day	-	<0.00013	mg/dm2.day		✓	Dustfall	Metals
MB	Magnesium (Mg)-Total	1456135	WG3511664-1	<0.00013		mg/dm2.day	-	<0.00013	mg/dm2.day		✓	Dustfall	Metals
MB	Magnesium (Mg)-Total	1456871	WG3512913-1	<0.00013		mg/dm2.day	-	<0.00013	mg/dm2.day		✓	Dustfall	Metals
MB	Magnesium (Mg)-Total	1456873	WG3512914-3	<0.00013		mg/dm2.day	-	<0.00013	mg/dm2.day		✓	Dustfall	Metals
MB	Manganese (Mn)-Total	1456139	WG3511663-1	<0.0000026		mg/dm2.day	-	<0.0000026	mg/dm2.day		✓	Dustfall	Metals
MB	Manganese (Mn)-Total	1456135	WG3511664-1	<0.0000026		mg/dm2.day	-	<0.0000026	mg/dm2.day		✓	Dustfall	Metals
MB	Manganese (Mn)-Total	1456871	WG3512913-1	<0.0000026		mg/dm2.day	-	<0.0000026	mg/dm2.day		✓	Dustfall	Metals
MB	Manganese (Mn)-Total	1456873	WG3512914-3	<0.0000026		mg/dm2.day	-	<0.0000026	mg/dm2.day		✓	Dustfall	Metals
MB	Molybdenum (Mo)-Total	1456139	WG3511663-1	<0.0000013		mg/dm2.day	-	<0.0000013	mg/dm2.day		✓	Dustfall	Metals
MB	Molybdenum (Mo)-Total	1456135	WG3511664-1	<0.0000013		mg/dm2.day	-	<0.0000013	mg/dm2.day		✓	Dustfall	Metals
MB	Molybdenum (Mo)-Total	1456871	WG3512913-1	<0.0000013		mg/dm2.day	-	<0.0000013	mg/dm2.day		✓	Dustfall	Metals
MB	Molybdenum (Mo)-Total	1456873	WG3512914-3	<0.0000013		mg/dm2.day	-	<0.0000013	mg/dm2.day		✓	Dustfall	Metals
MB	Nickel (Ni)-Total	1456139	WG3511663-1	<0.000013		mg/dm2.day	-	<0.000013	mg/dm2.day		✓	Dustfall	Metals
MB	Nickel (Ni)-Total	1456135	WG3511664-1	0.000046		mg/dm2.day	-	<0.000013	mg/dm2.day	B	×	Dustfall	Metals
MB	Nickel (Ni)-Total	1456871	WG3512913-1	<0.000013		mg/dm2.day	-	<0.000013	mg/dm2.day		✓	Dustfall	Metals
MB	Nickel (Ni)-Total	1456873	WG3512914-3	<0.000013		mg/dm2.day	-	<0.000013	mg/dm2.day		✓	Dustfall	Metals
MB	Phosphorus (P)-Total	1456139	WG3511663-1	<0.0013		mg/dm2.day	-	<0.0013	mg/dm2.day		✓	Dustfall	Metals
MB	Phosphorus (P)-Total	1456135	WG3511664-1	0.0022		mg/dm2.day	-	<0.0013	mg/dm2.day	MB-LOR	×	Dustfall	Metals
MB	Phosphorus (P)-Total	1456871	WG3512913-1	<0.0013		mg/dm2.day	-	<0.0013	mg/dm2.day		✓	Dustfall	Metals

Quality Control L2565740

Job Reference
Report To Sarah Flesher, New Gold Inc. Rainy River Project
Date Received 11-Mar-2021 8:00
Report Date 7-Apr-2021 11:40
Report Version 1

QC Type	Analyte	QC Lot #	ALS QC ID	Result	Target	Units	%	Limit	Units	Qual	Eval	Matrix	Class
MB	Phosphorus (P)-Total	1456873	WG3512914-3	<0.0013		mg/dm2.day	-	<0.0013	mg/dm2.day		✓	Dustfall	Metals
MB	Potassium (K)-Total	1456139	WG3511663-1	<0.0013		mg/dm2.day	-	<0.0013	mg/dm2.day		✓	Dustfall	Metals
MB	Potassium (K)-Total	1456135	WG3511664-1	<0.0013		mg/dm2.day	-	<0.0013	mg/dm2.day		✓	Dustfall	Metals
MB	Potassium (K)-Total	1456871	WG3512913-1	<0.0013		mg/dm2.day	-	<0.0013	mg/dm2.day		✓	Dustfall	Metals
MB	Potassium (K)-Total	1456873	WG3512914-3	<0.0013		mg/dm2.day	-	<0.0013	mg/dm2.day		✓	Dustfall	Metals
MB	Selenium (Se)-Total	1456139	WG3511663-1	<0.000026		mg/dm2.day	-	<0.000026	mg/dm2.day		✓	Dustfall	Metals
MB	Selenium (Se)-Total	1456135	WG3511664-1	<0.000026		mg/dm2.day	-	<0.000026	mg/dm2.day		✓	Dustfall	Metals
MB	Selenium (Se)-Total	1456871	WG3512913-1	<0.000026		mg/dm2.day	-	<0.000026	mg/dm2.day		✓	Dustfall	Metals
MB	Selenium (Se)-Total	1456873	WG3512914-3	<0.000026		mg/dm2.day	-	<0.000026	mg/dm2.day		✓	Dustfall	Metals
MB	Silicon (Si)-Total	1456139	WG3511663-1	<0.0013		mg/dm2.day	-	<0.0013	mg/dm2.day		✓	Dustfall	Metals
MB	Silicon (Si)-Total	1456135	WG3511664-1	<0.0013		mg/dm2.day	-	<0.0013	mg/dm2.day		✓	Dustfall	Metals
MB	Silicon (Si)-Total	1456871	WG3512913-1	<0.0013		mg/dm2.day	-	<0.0013	mg/dm2.day		✓	Dustfall	Metals
MB	Silicon (Si)-Total	1456873	WG3512914-3	<0.0013		mg/dm2.day	-	<0.0013	mg/dm2.day		✓	Dustfall	Metals
MB	Silver (Ag)-Total	1456139	WG3511663-1	<0.00000026		mg/dm2.day	-	<0.00000026	mg/dm2.day		✓	Dustfall	Metals
MB	Silver (Ag)-Total	1456135	WG3511664-1	<0.00000026		mg/dm2.day	-	<0.00000026	mg/dm2.day		✓	Dustfall	Metals
MB	Silver (Ag)-Total	1456871	WG3512913-1	<0.00000026		mg/dm2.day	-	<0.00000026	mg/dm2.day		✓	Dustfall	Metals
MB	Silver (Ag)-Total	1456873	WG3512914-3	<0.00000026		mg/dm2.day	-	<0.00000026	mg/dm2.day		✓	Dustfall	Metals
MB	Sodium (Na)-Total	1456139	WG3511663-1	<0.0013		mg/dm2.day	-	<0.0013	mg/dm2.day		✓	Dustfall	Metals
MB	Sodium (Na)-Total	1456135	WG3511664-1	<0.0013		mg/dm2.day	-	<0.0013	mg/dm2.day		✓	Dustfall	Metals
MB	Sodium (Na)-Total	1456871	WG3512913-1	<0.0013		mg/dm2.day	-	<0.0013	mg/dm2.day		✓	Dustfall	Metals
MB	Sodium (Na)-Total	1456873	WG3512914-3	<0.0013		mg/dm2.day	-	<0.0013	mg/dm2.day		✓	Dustfall	Metals
MB	Strontium (Sr)-Total	1456139	WG3511663-1	<0.0000026		mg/dm2.day	-	<0.0000026	mg/dm2.day		✓	Dustfall	Metals
MB	Strontium (Sr)-Total	1456135	WG3511664-1	<0.0000026		mg/dm2.day	-	<0.0000026	mg/dm2.day		✓	Dustfall	Metals
MB	Strontium (Sr)-Total	1456871	WG3512913-1	<0.0000026		mg/dm2.day	-	<0.0000026	mg/dm2.day		✓	Dustfall	Metals
MB	Strontium (Sr)-Total	1456873	WG3512914-3	<0.0000026		mg/dm2.day	-	<0.0000026	mg/dm2.day		✓	Dustfall	Metals
MB	Thallium (Tl)-Total	1456139	WG3511663-1	<0.0000026		mg/dm2.day	-	<0.0000026	mg/dm2.day		✓	Dustfall	Metals
MB	Thallium (Tl)-Total	1456135	WG3511664-1	<0.0000026		mg/dm2.day	-	<0.0000026	mg/dm2.day		✓	Dustfall	Metals
MB	Thallium (Tl)-Total	1456871	WG3512913-1	<0.0000026		mg/dm2.day	-	<0.0000026	mg/dm2.day		✓	Dustfall	Metals
MB	Thallium (Tl)-Total	1456873	WG3512914-3	<0.0000026		mg/dm2.day	-	<0.0000026	mg/dm2.day		✓	Dustfall	Metals
MB	Tin (Sn)-Total	1456139	WG3511663-1	<0.0000026		mg/dm2.day	-	<0.0000026	mg/dm2.day		✓	Dustfall	Metals
MB	Tin (Sn)-Total	1456135	WG3511664-1	<0.0000026		mg/dm2.day	-	<0.0000026	mg/dm2.day		✓	Dustfall	Metals
MB	Tin (Sn)-Total	1456871	WG3512913-1	0.0000042		mg/dm2.day	-	<0.0000026	mg/dm2.day	MB-LOR	✗	Dustfall	Metals
MB	Tin (Sn)-Total	1456873	WG3512914-3	<0.0000026		mg/dm2.day	-	<0.0000026	mg/dm2.day		✓	Dustfall	Metals
MB	Titanium (Ti)-Total	1456139	WG3511663-1	<0.00026		mg/dm2.day	-	<0.00026	mg/dm2.day		✓	Dustfall	Metals
MB	Titanium (Ti)-Total	1456135	WG3511664-1	<0.00026		mg/dm2.day	-	<0.00026	mg/dm2.day		✓	Dustfall	Metals
MB	Titanium (Ti)-Total	1456871	WG3512913-1	<0.00026		mg/dm2.day	-	<0.00026	mg/dm2.day		✓	Dustfall	Metals
MB	Titanium (Ti)-Total	1456873	WG3512914-3	<0.00026		mg/dm2.day	-	<0.00026	mg/dm2.day		✓	Dustfall	Metals
MB	Uranium (U)-Total	1456139	WG3511663-1	<0.00000026		mg/dm2.day	-	<0.00000026	mg/dm2.day		✓	Dustfall	Metals
MB	Uranium (U)-Total	1456135	WG3511664-1	<0.00000026		mg/dm2.day	-	<0.00000026	mg/dm2.day		✓	Dustfall	Metals
MB	Uranium (U)-Total	1456871	WG3512913-1	<0.00000026		mg/dm2.day	-	<0.00000026	mg/dm2.day		✓	Dustfall	Metals
MB	Uranium (U)-Total	1456873	WG3512914-3	<0.00000026		mg/dm2.day	-	<0.00000026	mg/dm2.day		✓	Dustfall	Metals
MB	Vanadium (V)-Total	1456139	WG3511663-1	<0.000026		mg/dm2.day	-	<0.000026	mg/dm2.day		✓	Dustfall	Metals
MB	Vanadium (V)-Total	1456135	WG3511664-1	<0.000026		mg/dm2.day	-	<0.000026	mg/dm2.day		✓	Dustfall	Metals
MB	Vanadium (V)-Total	1456871	WG3512913-1	<0.000026		mg/dm2.day	-	<0.000026	mg/dm2.day		✓	Dustfall	Metals
MB	Vanadium (V)-Total	1456873	WG3512914-3	<0.000026		mg/dm2.day	-	<0.000026	mg/dm2.day		✓	Dustfall	Metals
MB	Zinc (Zn)-Total	1456139	WG3511663-1	<0.000079		mg/dm2.day	-	<0.000079	mg/dm2.day		✓	Dustfall	Metals
MB	Zinc (Zn)-Total	1456135	WG3511664-1	<0.000079		mg/dm2.day	-	<0.000079	mg/dm2.day		✓	Dustfall	Metals
MB	Zinc (Zn)-Total	1456871	WG3512913-1	<0.000079		mg/dm2.day	-	<0.000079	mg/dm2.day		✓	Dustfall	Metals
MB	Zinc (Zn)-Total	1456873	WG3512914-3	<0.000079		mg/dm2.day	-	<0.000079	mg/dm2.day		✓	Dustfall	Metals

Qualifier Legend

B	Method Blank exceeds ALS DQO. Associated sample results which are < Limit of Reporting or > 5 times blank level are considered reliable.
MB-LOR	Method Blank exceeds ALS DQO. Limits of Reporting have been adjusted for samples with positive hits below 5x blank level.

Evaluation Legend

✓	QC Lot met ALS Data Quality Objectives
✗	QC Lot did not meet ALS Data Quality Objectives

Methodology L2565740

Job Reference
Report To Sarah Flesher, New Gold Inc. Rainy River Project

Date Received 11-Mar-2021 8:00
Report Date 7-Apr-2021 11:40
Report Version 1

ALS Test Code	ALS Test Description	Lab Location	Matrix	Method Reference	Methodology Description
Particulates (Dustfall)					
DUSTFALLS-ALL-DM2-VA	Dustfalls-Total, Soluble, Insoluble +FV	Vancouver	Dustfall	BC LAB MANUAL - PARTICULATE	This analysis is carried out using procedures modified from British Columbia Environmental Manual "Particulate." Particulates or "Dustfalls" are determined gravimetrically. Total Insoluble and Soluble Dustfalls are determined by filtering a sample through a 0.45 um membrane filter and drying the filter and filtrate at 104 C, followed by ignition at 550 C. The remaining residue after 550 C represents the fixed portion and the weight lost on ignition represents the volatile portion. The sum of all fixed and volatile portions on both Insoluble and Soluble portions represents Total Dustfalls.
PART-HIVOL-GRAV-BU	Particulate on High Volume Filter	Burlington	Filter	USEPA IO3.1	
PART-M212 F-GRAV-BU	PM via Gravimetric Analysis	Burlington	Filter	EPA QA Guidance Document 2.12	The particulate matter collected onto tare-weighed 47mm Teflon Disc filter media is desiccated then brought to a constant weight on an analytical balance. Results are presented in ug (per filter). An air volume can be included to allow for reporting in ug/m3.
Particulates (Filter)					
DUSTFALLS-ALL-DM2-VA	Dustfalls-Total, Soluble, Insoluble +FV	Vancouver	Dustfall	BC LAB MANUAL - PARTICULATE	This analysis is carried out using procedures modified from British Columbia Environmental Manual "Particulate." Particulates or "Dustfalls" are determined gravimetrically. Total Insoluble and Soluble Dustfalls are determined by filtering a sample through a 0.45 um membrane filter and drying the filter and filtrate at 104 C, followed by ignition at 550 C. The remaining residue after 550 C represents the fixed portion and the weight lost on ignition represents the volatile portion. The sum of all fixed and volatile portions on both Insoluble and Soluble portions represents Total Dustfalls.
PART-HIVOL-GRAV-BU	Particulate on High Volume Filter	Burlington	Filter	USEPA IO3.1	
PART-M212 F-GRAV-BU	PM via Gravimetric Analysis	Burlington	Filter	EPA QA Guidance Document 2.12	The particulate matter collected onto tare-weighed 47mm Teflon Disc filter media is desiccated then brought to a constant weight on an analytical balance. Results are presented in ug (per filter). An air volume can be included to allow for reporting in ug/m3.
Metals (Dustfall)					
MET-DUST(DM2)-MS-VA	Total Metals in Dustfalls by ICPMS	Vancouver	Dustfall	EPA 6020A	This analysis is carried out using procedures adapted from "Standard Methods for the Examination of Water and Wastewater" published by the American Public Health Association, and with procedures adapted from "Test Methods for Evaluating Solid Waste" SW-846 published by the United States Environmental Protection Agency (EPA). Instrumental analysis is by inductively coupled plasma - mass spectrometry (EPA Method 6020A).
Total Metals (Filter)					
MET-IO3.5-MS-BU	Metals on High Volume Filter by ICPMS	Burlington	Filter	IO3.5	After weighing (if required), hivol filters are sub-sampled and leached with nitric acid to extract available metal analytes. After dilution, the extracts are submitted to the ICPMS instrument for analysis.

Detection Limits L2565740

Job Reference
Report To Sarah Flesher, New Gold Inc. Rainy River Project
Date Received 11-Mar-2021 8:00
Report Date 7-Apr-2021 11:40
Report Version 1

Client Sample ID		SOUTH-TSP-346	SOUTH-TSP-347	SOUTH-TSP-348	SOUTH-TSP-349	SOUTH-TSP-350	NORTH-TSP-346	NORTH-TSP-347	NORTH-TSP-348	NORTH-TSP-349	NORTH-TSP-350	NORTHWEST-TSP-346	NORTHWEST-TSP-347	NORTHWEST-TSP-348
Date Sampled		2-Feb-2021	9-Feb-2021	15-Feb-2021	21-Feb-2021	27-Feb-2021	2-Feb-2021	9-Feb-2021	15-Feb-2021	21-Feb-2021	27-Feb-2021	2-Feb-2021	9-Feb-2021	15-Feb-2021
Time Sampled		0:00	0:00	0:00	0:00	0:00	0:00	0:00	0:00	0:00	0:00	0:00	0:00	0:00
ALS Sample ID		L2565740-1	L2565740-2	L2565740-3	L2565740-4	L2565740-5	L2565740-6	L2565740-7	L2565740-8	L2565740-9	L2565740-10	L2565740-11	L2565740-12	L2565740-13
Parameter	Units	Filter	Filter	Filter	Filter	Filter	Filter	Filter	Filter	Filter	Filter	Filter	Filter	Filter
Particulates (Filter)														
Total particulate	ug	2300	2300	2300	2300	2300	2300	2300	2300	2300	2300	2300	2300	2300
Total Metals (Filter)														
Arsenic (As)	ug	3.0	3.0	3.0	3.0	3.0	3.0	3.0	3.0	3.0	3.0	3.0	3.0	3.0
Cadmium (Cd)	ug	2.0	2.0	2.0	2.0	2.0	2.0	2.0	2.0	2.0	2.0	2.0	2.0	2.0
Chromium (Cr)	ug	5.0	5.0	5.0	5.0	5.0	5.0	5.0	5.0	5.0	5.0	5.0	5.0	5.0
Cobalt (Co)	ug	2.0	2.0	2.0	2.0	2.0	2.0	2.0	2.0	2.0	2.0	2.0	2.0	2.0
Copper (Cu)	ug	4.0	4.0	4.0	4.0	4.0	4.0	4.0	4.0	4.0	4.0	4.0	4.0	4.0
Iron (Fe)	ug	20	20	20	20	20	20	20	20	20	20	20	20	20
Lead (Pb)	ug	3.0	3.0	3.0	3.0	3.0	3.0	3.0	3.0	3.0	3.0	3.0	3.0	3.0
Manganese (Mn)	ug	1.0	1.0	1.0	1.0	1.0	1.0	1.0	1.0	1.0	1.0	1.0	1.0	1.0
Nickel (Ni)	ug	3.0	3.0	3.0	3.0	3.0	3.0	3.0	3.0	3.0	3.0	3.0	3.0	3.0
Selenium (Se)	ug	10	10	10	10	10	10	10	10	10	10	10	10	10
Vanadium (V)	ug	5.0	5.0	5.0	5.0	5.0	5.0	5.0	5.0	5.0	5.0	5.0	5.0	5.0
Zinc (Zn)	ug	5.0	5.0	5.0	5.0	5.0	5.0	5.0	5.0	5.0	5.0	5.0	5.0	5.0
Particulates (Dustfall)														
Fixed Dustfall	mg/dm2.day													
Volatile Dustfall	mg/dm2.day													
Total Dustfall	mg/dm2.day													
Fixed Insoluble Dustfall	mg/dm2.day													
Volatile Insoluble Dustfall	mg/dm2.day													
Total Insoluble Dustfall	mg/dm2.day													
Fixed Soluble Dustfall	mg/dm2.day													
Volatile Soluble Dustfall	mg/dm2.day													
Total Soluble Dustfall	mg/dm2.day													
Metals (Dustfall)														
Aluminum (Al)-Total	mg/dm2.day													
Antimony (Sb)-Total	mg/dm2.day													
Arsenic (As)-Total	mg/dm2.day													
Barium (Ba)-Total	mg/dm2.day													
Beryllium (Be)-Total	mg/dm2.day													
Bismuth (Bi)-Total	mg/dm2.day													
Boron (B)-Total	mg/dm2.day													
Cadmium (Cd)-Total	mg/dm2.day													
Calcium (Ca)-Total	mg/dm2.day													
Chromium (Cr)-Total	mg/dm2.day													
Cobalt (Co)-Total	mg/dm2.day													
Copper (Cu)-Total	mg/dm2.day													
Iron (Fe)-Total	mg/dm2.day													
Lead (Pb)-Total	mg/dm2.day													
Lithium (Li)-Total	mg/dm2.day													
Magnesium (Mg)-Total	mg/dm2.day													
Manganese (Mn)-Total	mg/dm2.day													
Molybdenum (Mo)-Total	mg/dm2.day													
Nickel (Ni)-Total	mg/dm2.day													
Phosphorus (P)-Total	mg/dm2.day													

Detection Limits L2565740

Job Reference
Report To Sarah Flesher, New Golc
Date Received 11-Mar-2021 8:00
Report Date 7-Apr-2021 11:40
Report Version 1

Client Sample ID		NORTHWEST-TSP-349	NORTHWEST-TSP-350	TSP-TRAVEL BLANK	SOUTH-PM2.5-346	SOUTH-PM2.5-347	SOUTH-PM2.5-348	SOUTH-PM2.5-349	SOUTH-PM2.5-350	NORTH-PM2.5-346	NORTH-PM2.5-347	NORTH-PM2.5-348	NORTH-PM2.5-349
Date Sampled		21-Feb-2021	27-Feb-2021	3-Mar-2021	2-Feb-2021	9-Feb-2021	15-Feb-2021	21-Feb-2021	27-Feb-2021	2-Feb-2021	9-Feb-2021	15-Feb-2021	21-Feb-2021
Time Sampled		0:00	0:00	0:00	0:00	0:00	0:00	0:00	0:00	0:00	0:00	0:00	0:00
ALS Sample ID		L2565740-14	L2565740-15	L2565740-16	L2565740-17	L2565740-18	L2565740-19	L2565740-20	L2565740-21	L2565740-22	L2565740-23	L2565740-24	L2565740-25
Parameter	Units	Filter	Filter	Filter	Filter	Filter	Filter	Filter	Filter	Filter	Filter	Filter	Filter
Particulates (Filter)													
Total particulate	ug	2300	2300	2300	15	15	15	15	15	15	15	15	15
Total Metals (Filter)													
Arsenic (As)	ug	3.0	3.0	3.0									
Cadmium (Cd)	ug	2.0	2.0	2.0									
Chromium (Cr)	ug	5.0	5.0	5.0									
Cobalt (Co)	ug	2.0	2.0	2.0									
Copper (Cu)	ug	4.0	4.0	4.0									
Iron (Fe)	ug	20	20	20									
Lead (Pb)	ug	3.0	3.0	3.0									
Manganese (Mn)	ug	1.0	1.0	1.0									
Nickel (Ni)	ug	3.0	3.0	3.0									
Selenium (Se)	ug	10	10	10									
Vanadium (V)	ug	5.0	5.0	5.0									
Zinc (Zn)	ug	5.0	5.0	5.0									
Particulates (Dustfall)													
Fixed Dustfall	mg/dm2.day												
Volatile Dustfall	mg/dm2.day												
Total Dustfall	mg/dm2.day												
Fixed Insoluble Dustfall	mg/dm2.day												
Volatile Insoluble Dustfall	mg/dm2.day												
Total Insoluble Dustfall	mg/dm2.day												
Fixed Soluble Dustfall	mg/dm2.day												
Volatile Soluble Dustfall	mg/dm2.day												
Total Soluble Dustfall	mg/dm2.day												
Metals (Dustfall)													
Aluminum (Al)-Total	mg/dm2.day												
Antimony (Sb)-Total	mg/dm2.day												
Arsenic (As)-Total	mg/dm2.day												
Barium (Ba)-Total	mg/dm2.day												
Beryllium (Be)-Total	mg/dm2.day												
Bismuth (Bi)-Total	mg/dm2.day												
Boron (B)-Total	mg/dm2.day												
Cadmium (Cd)-Total	mg/dm2.day												
Calcium (Ca)-Total	mg/dm2.day												
Chromium (Cr)-Total	mg/dm2.day												
Cobalt (Co)-Total	mg/dm2.day												
Copper (Cu)-Total	mg/dm2.day												
Iron (Fe)-Total	mg/dm2.day												
Lead (Pb)-Total	mg/dm2.day												
Lithium (Li)-Total	mg/dm2.day												
Magnesium (Mg)-Total	mg/dm2.day												
Manganese (Mn)-Total	mg/dm2.day												
Molybdenum (Mo)-Total	mg/dm2.day												
Nickel (Ni)-Total	mg/dm2.day												
Phosphorus (P)-Total	mg/dm2.day												

Detection Limits L2565740

Job Reference
Report To Sarah Flesher, New Golc
Date Received 11-Mar-2021 8:00
Report Date 7-Apr-2021 11:40
Report Version 1

Client Sample ID		NORTH-PM2.5-350	NORTHWEST-PM2.5-346	NORTHWEST-PM2.5-347	NORTHWEST-PM2.5-348	NORTHWEST-PM2.5-349	NORTHWEST-PM2.5-350	PM2.5-TRAVEL BLANK	NOP1-DUSTFALL-2	CP1-DUSTFALL-2	WCP1-DUSTFALL-2	GH1-DUSTFALL-2	SPP1-DUSTFALL-9	SPP1-DUSTFALL-10
Date Sampled		27-Feb-2021	2-Feb-2021	9-Feb-2021	15-Feb-2021	21-Feb-2021	27-Feb-2021	3-Mar-2021	2-Mar-2021	2-Mar-2021	2-Mar-2021	2-Mar-2021	10-Feb-2021	17-Feb-2021
Time Sampled		0:00	0:00	0:00	0:00	0:00	0:00	0:00	0:00	0:00	0:00	0:00	0:00	0:00
ALS Sample ID		L2565740-26	L2565740-27	L2565740-28	L2565740-29	L2565740-30	L2565740-31	L2565740-32	L2565740-33	L2565740-34	L2565740-35	L2565740-36	L2565740-37	L2565740-38
Parameter	Units	Filter	Filter	Filter	Filter	Filter	Filter	Filter	Dustfall	Dustfall	Dustfall	Dustfall	Dustfall	Dustfall
Particulates (Filter)														
Total particulate	ug	15	15	15	15	15	15	15						
Total Metals (Filter)														
Arsenic (As)	ug													
Cadmium (Cd)	ug													
Chromium (Cr)	ug													
Cobalt (Co)	ug													
Copper (Cu)	ug													
Iron (Fe)	ug													
Lead (Pb)	ug													
Manganese (Mn)	ug													
Nickel (Ni)	ug													
Selenium (Se)	ug													
Vanadium (V)	ug													
Zinc (Zn)	ug													
Particulates (Dustfall)														
Fixed Dustfall	mg/dm2.day								0.11	0.11	0.11	0.11	0.43	0.43
Volatile Dustfall	mg/dm2.day								0.11	0.11	0.11	0.11	0.43	0.43
Total Dustfall	mg/dm2.day								0.11	0.11	0.11	0.11	0.43	0.43
Fixed Insoluble Dustfall	mg/dm2.day								0.11	0.11	0.11	0.11	0.43	0.43
Volatile Insoluble Dustfall	mg/dm2.day								0.11	0.11	0.11	0.11	0.43	0.43
Total Insoluble Dustfall	mg/dm2.day								0.11	0.11	0.11	0.11	0.43	0.43
Fixed Soluble Dustfall	mg/dm2.day								0.11	0.11	0.11	0.11	0.43	0.43
Volatile Soluble Dustfall	mg/dm2.day								0.11	0.11	0.11	0.11	0.43	0.43
Total Soluble Dustfall	mg/dm2.day								0.11	0.11	0.11	0.11	0.43	0.43
Metals (Dustfall)														
Aluminum (Al)-Total	mg/dm2.day								0.000043	0.000043	0.000093	0.000044	0.00026	0.00029
Antimony (Sb)-Total	mg/dm2.day								0.0000014	0.0000014	0.0000062	0.0000015	0.0000088	0.0000098
Arsenic (As)-Total	mg/dm2.day								0.0000014	0.000028	0.0000062	0.000044	0.0018	0.00069
Barium (Ba)-Total	mg/dm2.day								0.00000071	0.00000071	0.0000015	0.00000074	0.0000044	0.0000049
Beryllium (Be)-Total	mg/dm2.day								0.0000071	0.0000071	0.000015	0.0000074	0.000044	0.000049
Bismuth (Bi)-Total	mg/dm2.day								0.0000071	0.0000071	0.000015	0.0000074	0.000044	0.000049
Boron (B)-Total	mg/dm2.day								0.00014	0.00014	0.00031	0.00015	0.00088	0.00098
Cadmium (Cd)-Total	mg/dm2.day								0.00000071	0.00000071	0.0000015	0.00000074	0.0000044	0.0000049
Calcium (Ca)-Total	mg/dm2.day								0.00028	0.00028	0.0012	0.00029	0.0018	0.0020
Chromium (Cr)-Total	mg/dm2.day								0.0000071	0.0000071	0.000015	0.0000074	0.000044	0.000049
Cobalt (Co)-Total	mg/dm2.day								0.0000014	0.0000014	0.0000031	0.0000015	0.0000088	0.0000098
Copper (Cu)-Total	mg/dm2.day								0.0000071	0.0000071	0.000015	0.0000074	0.000044	0.000049
Iron (Fe)-Total	mg/dm2.day								0.00043	0.00043	0.00093	0.00044	0.0026	0.0029
Lead (Pb)-Total	mg/dm2.day								0.00000071	0.00000071	0.0000015	0.00000074	0.0000044	0.0000049
Lithium (Li)-Total	mg/dm2.day								0.000071	0.000071	0.00015	0.000074	0.00044	0.00049
Magnesium (Mg)-Total	mg/dm2.day								0.000071	0.000071	0.00015	0.000074	0.00044	0.00049
Manganese (Mn)-Total	mg/dm2.day								0.0000014	0.0000014	0.0000031	0.0000015	0.0000088	0.0000098
Molybdenum (Mo)-Total	mg/dm2.day								0.00000071	0.00000071	0.0000015	0.00000074	0.0000044	0.0000049
Nickel (Ni)-Total	mg/dm2.day								0.0000071	0.0000071	0.000015	0.0000074	0.000044	0.000049
Phosphorus (P)-Total	mg/dm2.day								0.00071	0.00071	0.0015	0.00074	0.0044	0.0049

Detection Limits L2565740

Job Reference
Report To Sarah Flesher, New Golc
Date Received 11-Mar-2021 8:00
Report Date 7-Apr-2021 11:40
Report Version 1

Client Sample ID		SPP1-DUSTFALL-11	SPP1-DUSTFALL-12	DUSTFALL-GALLINGER ROAD	DUSTFALL-TAIT ROAD (SOUTH)	DUSTFALL-NORTHWEST
Date Sampled		24-Feb-2021	3-Mar-2021	2-Mar-2021	2-Mar-2021	2-Mar-2021
Time Sampled		0:00	0:00	0:00	0:00	0:00
ALS Sample ID		L2565740-39	L2565740-40	L2565740-41	L2565740-42	L2565740-43
Parameter	Units	Dustfall	Dustfall	Dustfall	Dustfall	Dustfall
Particulates (Filter)						
Total particulate	ug					
Total Metals (Filter)						
Arsenic (As)	ug					
Cadmium (Cd)	ug					
Chromium (Cr)	ug					
Cobalt (Co)	ug					
Copper (Cu)	ug					
Iron (Fe)	ug					
Lead (Pb)	ug					
Manganese (Mn)	ug					
Nickel (Ni)	ug					
Selenium (Se)	ug					
Vanadium (V)	ug					
Zinc (Zn)	ug					
Particulates (Dustfall)						
Fixed Dustfall	mg/dm2.day	0.43	0.43	0.11	0.11	0.12
Volatile Dustfall	mg/dm2.day	0.43	0.43	0.11	0.11	0.12
Total Dustfall	mg/dm2.day	0.43	0.43	0.11	0.11	0.12
Fixed Insoluble Dustfall	mg/dm2.day	0.43	0.43	0.11	0.11	0.12
Volatile Insoluble Dustfall	mg/dm2.day	0.43	0.43	0.11	0.11	0.12
Total Insoluble Dustfall	mg/dm2.day	0.43	0.43	0.11	0.11	0.12
Fixed Soluble Dustfall	mg/dm2.day	0.43	0.43	0.11	0.11	0.12
Volatile Soluble Dustfall	mg/dm2.day	0.43	0.43	0.11	0.11	0.12
Total Soluble Dustfall	mg/dm2.day	0.43	0.43	0.11	0.11	0.12
Metals (Dustfall)						
Aluminum (Al)-Total	mg/dm2.day	0.00017	0.00017	0.000043	0.000043	0.000046
Antimony (Sb)-Total	mg/dm2.day	0.0000057	0.0000057	0.0000014	0.0000014	0.0000015
Arsenic (As)-Total	mg/dm2.day	0.00017	0.00040	0.000028	0.000011	0.0000015
Barium (Ba)-Total	mg/dm2.day	0.0000028	0.0000028	0.00000071	0.00000071	0.00000076
Beryllium (Be)-Total	mg/dm2.day	0.000028	0.000028	0.0000071	0.0000071	0.0000076
Bismuth (Bi)-Total	mg/dm2.day	0.000028	0.000028	0.0000071	0.0000071	0.0000076
Boron (B)-Total	mg/dm2.day	0.00057	0.00057	0.00014	0.00014	0.00015
Cadmium (Cd)-Total	mg/dm2.day	0.0000028	0.0000028	0.00000071	0.00000071	0.00000076
Calcium (Ca)-Total	mg/dm2.day	0.0011	0.0011	0.00028	0.00028	0.00031
Chromium (Cr)-Total	mg/dm2.day	0.000028	0.000028	0.0000071	0.0000071	0.0000076
Cobalt (Co)-Total	mg/dm2.day	0.0000057	0.0000057	0.0000014	0.0000014	0.0000015
Copper (Cu)-Total	mg/dm2.day	0.000028	0.000028	0.0000071	0.0000071	0.0000076
Iron (Fe)-Total	mg/dm2.day	0.0017	0.0017	0.00043	0.00043	0.00046
Lead (Pb)-Total	mg/dm2.day	0.0000028	0.0000028	0.00000071	0.00000071	0.00000076
Lithium (Li)-Total	mg/dm2.day	0.00028	0.00028	0.000071	0.000071	0.000076
Magnesium (Mg)-Total	mg/dm2.day	0.00028	0.00028	0.000071	0.000071	0.000076
Manganese (Mn)-Total	mg/dm2.day	0.0000057	0.0000057	0.0000014	0.0000014	0.0000015
Molybdenum (Mo)-Total	mg/dm2.day	0.0000028	0.0000028	0.00000071	0.00000071	0.00000076
Nickel (Ni)-Total	mg/dm2.day	0.000028	0.000028	0.0000071	0.0000071	0.0000076
Phosphorus (P)-Total	mg/dm2.day	0.0028	0.0028	0.00071	0.00071	0.00076

Detection Limits L2565740

Job Reference
Report To Sarah Flesher, New Gold Inc. Rainy River Project
Date Received 11-Mar-2021 8:00
Report Date 7-Apr-2021 11:40
Report Version 1

Client Sample ID		SOUTH-TSP-346	SOUTH-TSP-347	SOUTH-TSP-348	SOUTH-TSP-349	SOUTH-TSP-350	NORTH-TSP-346	NORTH-TSP-347	NORTH-TSP-348	NORTH-TSP-349	NORTH-TSP-350	NORTHWEST-TSP-346	NORTHWEST-TSP-347	NORTHWEST-TSP-348
Date Sampled		2-Feb-2021	9-Feb-2021	15-Feb-2021	21-Feb-2021	27-Feb-2021	2-Feb-2021	9-Feb-2021	15-Feb-2021	21-Feb-2021	27-Feb-2021	2-Feb-2021	9-Feb-2021	15-Feb-2021
Time Sampled		0:00	0:00	0:00	0:00	0:00	0:00	0:00	0:00	0:00	0:00	0:00	0:00	0:00
ALS Sample ID		L2565740-1	L2565740-2	L2565740-3	L2565740-4	L2565740-5	L2565740-6	L2565740-7	L2565740-8	L2565740-9	L2565740-10	L2565740-11	L2565740-12	L2565740-13
Parameter	Units	Filter	Filter	Filter	Filter	Filter	Filter	Filter	Filter	Filter	Filter	Filter	Filter	Filter
Potassium (K)-Total	mg/dm2.day													
Selenium (Se)-Total	mg/dm2.day													
Silicon (Si)-Total	mg/dm2.day													
Silver (Ag)-Total	mg/dm2.day													
Sodium (Na)-Total	mg/dm2.day													
Strontium (Sr)-Total	mg/dm2.day													
Thallium (Tl)-Total	mg/dm2.day													
Tin (Sn)-Total	mg/dm2.day													
Titanium (Ti)-Total	mg/dm2.day													
Uranium (U)-Total	mg/dm2.day													
Vanadium (V)-Total	mg/dm2.day													
Zinc (Zn)-Total	mg/dm2.day													

Detection Limits L2565740

Job Reference
Report To Sarah Flesher, New Golc
Date Received 11-Mar-2021 8:00
Report Date 7-Apr-2021 11:40
Report Version 1

Client Sample ID		NORTHWEST-TSP-349	NORTHWEST-TSP-350	TSP-TRAVEL BLANK	SOUTH-PM2.5-346	SOUTH-PM2.5-347	SOUTH-PM2.5-348	SOUTH-PM2.5-349	SOUTH-PM2.5-350	NORTH-PM2.5-346	NORTH-PM2.5-347	NORTH-PM2.5-348	NORTH-PM2.5-349
Date Sampled		21-Feb-2021	27-Feb-2021	3-Mar-2021	2-Feb-2021	9-Feb-2021	15-Feb-2021	21-Feb-2021	27-Feb-2021	2-Feb-2021	9-Feb-2021	15-Feb-2021	21-Feb-2021
Time Sampled		0:00	0:00	0:00	0:00	0:00	0:00	0:00	0:00	0:00	0:00	0:00	0:00
ALS Sample ID		L2565740-14	L2565740-15	L2565740-16	L2565740-17	L2565740-18	L2565740-19	L2565740-20	L2565740-21	L2565740-22	L2565740-23	L2565740-24	L2565740-25
Parameter	Units	Filter	Filter	Filter	Filter	Filter	Filter	Filter	Filter	Filter	Filter	Filter	Filter
Potassium (K)-Total	mg/dm2.day												
Selenium (Se)-Total	mg/dm2.day												
Silicon (Si)-Total	mg/dm2.day												
Silver (Ag)-Total	mg/dm2.day												
Sodium (Na)-Total	mg/dm2.day												
Strontium (Sr)-Total	mg/dm2.day												
Thallium (Tl)-Total	mg/dm2.day												
Tin (Sn)-Total	mg/dm2.day												
Titanium (Ti)-Total	mg/dm2.day												
Uranium (U)-Total	mg/dm2.day												
Vanadium (V)-Total	mg/dm2.day												
Zinc (Zn)-Total	mg/dm2.day												

Detection Limits L2565740

Job Reference
Report To Sarah Flesher, New Golc
Date Received 11-Mar-2021 8:00
Report Date 7-Apr-2021 11:40
Report Version 1

Client Sample ID		NORTH-PM2.5-350	NORTHWEST-PM2.5-346	NORTHWEST-PM2.5-347	NORTHWEST-PM2.5-348	NORTHWEST-PM2.5-349	NORTHWEST-PM2.5-350	PM2.5-TRAVEL BLANK	NOP1-DUSTFALL-2	CP1-DUSTFALL-2	WCP1-DUSTFALL-2	GH1-DUSTFALL-2	SPP1-DUSTFALL-9	SPP1-DUSTFALL-10
Date Sampled		27-Feb-2021	2-Feb-2021	9-Feb-2021	15-Feb-2021	21-Feb-2021	27-Feb-2021	3-Mar-2021	2-Mar-2021	2-Mar-2021	2-Mar-2021	2-Mar-2021	10-Feb-2021	17-Feb-2021
Time Sampled		0:00	0:00	0:00	0:00	0:00	0:00	0:00	0:00	0:00	0:00	0:00	0:00	0:00
ALS Sample ID		L2565740-26	L2565740-27	L2565740-28	L2565740-29	L2565740-30	L2565740-31	L2565740-32	L2565740-33	L2565740-34	L2565740-35	L2565740-36	L2565740-37	L2565740-38
Parameter	Units	Filter	Filter	Filter	Filter	Filter	Filter	Filter	Dustfall	Dustfall	Dustfall	Dustfall	Dustfall	Dustfall
Potassium (K)-Total	mg/dm2.day								0.00071	0.00071	0.0015	0.00074	0.0044	0.0049
Selenium (Se)-Total	mg/dm2.day								0.000014	0.000014	0.000031	0.000015	0.000088	0.000098
Silicon (Si)-Total	mg/dm2.day								0.00071	0.00071	0.0015	0.00074	0.0044	0.0049
Silver (Ag)-Total	mg/dm2.day								0.00000014	0.00000014	0.00000031	0.00000015	0.00000088	0.00000098
Sodium (Na)-Total	mg/dm2.day								0.00071	0.00071	0.0015	0.00074	0.0044	0.0049
Strontium (Sr)-Total	mg/dm2.day								0.0000014	0.0000014	0.0000031	0.0000015	0.0000088	0.0000098
Thallium (Tl)-Total	mg/dm2.day								0.0000014	0.0000014	0.0000031	0.0000015	0.0000088	0.0000098
Tin (Sn)-Total	mg/dm2.day								0.0000043	0.0000014	0.0000031	0.0000015	0.0000088	0.0000098
Titanium (Ti)-Total	mg/dm2.day								0.00014	0.00014	0.00031	0.00088	0.00088	0.00098
Uranium (U)-Total	mg/dm2.day								0.00000014	0.00000014	0.00000031	0.00000015	0.00000088	0.00000098
Vanadium (V)-Total	mg/dm2.day								0.000014	0.000014	0.000031	0.000015	0.000088	0.000098
Zinc (Zn)-Total	mg/dm2.day								0.000043	0.000043	0.000093	0.000044	0.00026	0.00029

Detection Limits L2565740

Job Reference
Report To Sarah Flesher, New Golc
Date Received 11-Mar-2021 8:00
Report Date 7-Apr-2021 11:40
Report Version 1

Client Sample ID		SPP1-DUSTFALL-11	SPP1-DUSTFALL-12	DUSTFALL-GALLINGER ROAD	DUSTFALL-TAIT ROAD (SOUTH)	DUSTFALL-NORTHWEST
Date Sampled		24-Feb-2021	3-Mar-2021	2-Mar-2021	2-Mar-2021	2-Mar-2021
Time Sampled		0:00	0:00	0:00	0:00	0:00
ALS Sample ID		L2565740-39	L2565740-40	L2565740-41	L2565740-42	L2565740-43
Parameter	Units	Dustfall	Dustfall	Dustfall	Dustfall	Dustfall
Potassium (K)-Total	mg/dm2.day	0.0028	0.0028	0.00071	0.00071	0.00076
Selenium (Se)-Total	mg/dm2.day	0.000057	0.000057	0.000014	0.000014	0.000015
Silicon (Si)-Total	mg/dm2.day	0.0028	0.0028	0.00071	0.00071	0.00076
Silver (Ag)-Total	mg/dm2.day	0.00000057	0.00000057	0.00000014	0.00000014	0.00000015
Sodium (Na)-Total	mg/dm2.day	0.0028	0.0028	0.00071	0.00071	0.00076
Strontium (Sr)-Total	mg/dm2.day	0.0000057	0.0000057	0.0000014	0.0000014	0.0000015
Thallium (Tl)-Total	mg/dm2.day	0.0000057	0.0000057	0.0000014	0.0000014	0.0000015
Tin (Sn)-Total	mg/dm2.day	0.0000057	0.0000057	0.0000014	0.0000014	0.0000015
Titanium (Ti)-Total	mg/dm2.day	0.00057	0.00057	0.00014	0.00014	0.00015
Uranium (U)-Total	mg/dm2.day	0.00000057	0.00000057	0.00000014	0.00000014	0.00000015
Vanadium (V)-Total	mg/dm2.day	0.000057	0.000057	0.000014	0.000014	0.000015
Zinc (Zn)-Total	mg/dm2.day	0.00017	0.00017	0.000043	0.000043	0.000046

Report To	Sarah Flesher, New Gold Inc. Rainy River Project 5967 Highway 11/71 P.O. Box 5 Emo, ON P0W 1E0	**Date Received** **Report Date** **Report Revision** **Version**	7-Apr-2021 17:30 4-May-2021 15:51 1 FINAL
Client Phone	807-234-8200		

Certificate of Analysis

Lab Work Order #	L2574300
Project P.O. #	4500050093
Job Reference	
Legal Site Description	
C of C Numbers	

Case Narrative/Comments

Work Order Qualifiers:

Temperature - 20.2ºC °

Claire Kocharakkal, B.Sc.
Account Manager

[This report shall not be reproduced except in full without the written authority of the Laboratory.]

Results Summary L2574300

Job Reference
Report To Sarah Flesher, New Gold Inc. Rainy River Project
Date Received 7-Apr-2021 17:30
Report Date 4-May-2021 15:51
Report Version 1

Client Sample ID			SOUTH-TSP-351	SOUTH-TSP-352	SOUTH-TSP-353	SOUTH-TSP-354	SOUTH-TSP-355	NORTH-TSP-351	NORTH-TSP-352	NORTH-TSP-353	NORTH-TSP-354	NORTH-TSP-355	NORTHWEST-TSP-351	NORTHWEST-TSP-352
Date Sampled			5-Mar-2021 0:00	11-Mar-2021 0:00	17-Mar-2021 0:00	23-Mar-2021 0:00	29-Mar-2021 0:00	5-Mar-2021 0:00	11-Mar-2021 0:00	17-Mar-2021 0:00	23-Mar-2021 0:00	29-Mar-2021 0:00	5-Mar-2021 0:00	11-Mar-2021 0:00
ALS Sample ID			L2574300-1	L2574300-2	L2574300-3	L2574300-4	L2574300-5	L2574300-6	L2574300-7	L2574300-8	L2574300-9	L2574300-10	L2574300-11	L2574300-12
Parameter	Lowest Detection Limit	Units	Filter	Filter	Filter	Filter	Filter	Filter	Filter	Filter	Filter	Filter	Filter	Filter
Particulates (Filter)														
Total particulate	15	ug	9100	48500	64400	23000	99800	13100	21800	53900	12200	91300	29700	19200
Total Metals (Filter)														
Arsenic (As)	3.0	ug	<3.0	<3.0	<3.0	<3.0	<3.0	<3.0	<3.0	<3.0	<3.0	<3.0	<3.0	<3.0
Cadmium (Cd)	2.0	ug	<2.0	<2.0	<2.0	<2.0	<2.0	<2.0	<2.0	<2.0	<2.0	<2.0	<2.0	<2.0
Chromium (Cr)	5.0	ug	7.3	7.2	7.6	5.9	7.1	9.1	7.0	6.8	5.2	6.8	7.1	5.3
Cobalt (Co)	2.0	ug	<2.0	<2.0	<2.0	<2.0	<2.0	<2.0	<2.0	<2.0	<2.0	<2.0	<2.0	<2.0
Copper (Cu)	4.0	ug	47.7	104	104	104	39.2	76.1	159	153	181	77.9	139	68.0
Iron (Fe)	20	ug	338	1120	1670	477	1550	437	509	1250	190	1660	873	405
Lead (Pb)	3.0	ug	<3.0	4.4	3.3	<3.0	<3.0	<3.0	<3.0	3.8	<3.0	3.8	5.8	<3.0
Manganese (Mn)	1.0	ug	8.2	35.4	63.5	13.2	59.9	9.0	14.8	43.4	4.9	68.0	27.4	11.2
Nickel (Ni)	3.0	ug	3.7	3.9	4.4	3.4	4.5	4.4	3.8	4.3	<3.0	4.5	4.1	<3.0
Selenium (Se)	10	ug	<10	<10	<10	<10	<10	<10	<10	<10	<10	<10	<10	<10
Vanadium (V)	5.0	ug	<5.0	<5.0	<5.0	<5.0	<5.0	<5.0	<5.0	<5.0	<5.0	<5.0	<5.0	<5.0
Zinc (Zn)	5.0	ug	10.1	27.7	31.6	13.7	22.5	7.4	22.8	35.2	9.2	35.6	33.3	9.5
Particulates (Dustfall)														
Fixed Dustfall	0.10	mg/dm2.day												
Volatile Dustfall	0.10	mg/dm2.day												
Total Dustfall	0.10	mg/dm2.day												
Fixed Insoluble Dustfall	0.10	mg/dm2.day												
Volatile Insoluble Dustfall	0.10	mg/dm2.day												
Total Insoluble Dustfall	0.10	mg/dm2.day												
Fixed Soluble Dustfall	0.10	mg/dm2.day												
Volatile Soluble Dustfall	0.10	mg/dm2.day												
Total Soluble Dustfall	0.10	mg/dm2.day												
Metals (Dustfall)														
Aluminum (Al)-Total	0.000036	mg/dm2.day												
Antimony (Sb)-Total	0.0000024	mg/dm2.day												
Arsenic (As)-Total	0.0000036	mg/dm2.day												
Barium (Ba)-Total	0.00000060	mg/dm2.day												
Beryllium (Be)-Total	0.0000060	mg/dm2.day												
Bismuth (Bi)-Total	0.0000060	mg/dm2.day												
Boron (B)-Total	0.00012	mg/dm2.day												
Cadmium (Cd)-Total	0.00000060	mg/dm2.day												
Calcium (Ca)-Total	0.00024	mg/dm2.day												
Chromium (Cr)-Total	0.0000060	mg/dm2.day												
Cobalt (Co)-Total	0.0000012	mg/dm2.day												
Copper (Cu)-Total	0.0000060	mg/dm2.day												
Iron (Fe)-Total	0.00036	mg/dm2.day												
Lead (Pb)-Total	0.00000060	mg/dm2.day												
Lithium (Li)-Total	0.000060	mg/dm2.day												
Magnesium (Mg)-Total	0.000060	mg/dm2.day												
Manganese (Mn)-Total	0.0000012	mg/dm2.day												
Molybdenum (Mo)-Total	0.00000060	mg/dm2.day												
Nickel (Ni)-Total	0.0000060	mg/dm2.day												

Results Summary L2574300

Job Reference
Report To Sarah Flesher, New Gold Inc. Rainy River Proj
Date Received 7-Apr-2021 17:30
Report Date 4-May-2021 15:51
Report Version 1

Client Sample ID			NORTHWEST-TSP-353	NORTHWEST-TSP-354	NORTHWEST-TSP-355	TSP-TRAVEL BLANK	SOUTH-PM2.5-351	SOUTH-PM2.5-352	SOUTH-PM2.5-353	SOUTH-PM2.5-354	SOUTH-PM2.5-355	NORTH-PM2.5-351	NORTH-PM2.5-352
Date Sampled			17-Mar-2021	23-Mar-2021	29-Mar-2021	5-Apr-2021	5-Mar-2021	11-Mar-2021	17-Mar-2021	23-Mar-2021	29-Mar-2021	5-Mar-2021	11-Mar-2021
Time Sampled			0:00	0:00	0:00	0:00	0:00	0:00	0:00	0:00	0:00	0:00	0:00
ALS Sample ID			L2574300-13	L2574300-14	L2574300-15	L2574300-16	L2574300-17	L2574300-18	L2574300-19	L2574300-20	L2574300-21	L2574300-22	L2574300-23
Parameter	Lowest Detection Limit	Units	Filter	Filter	Filter	Filter	Filter	Filter	Filter	Filter	Filter	Filter	Filter
Particulates (Filter)													
Total particulate	15	ug	14400	156000	87800	<2300	110	54	96	26	74	56	40
Total Metals (Filter)													
Arsenic (As)	3.0	ug	<3.0	<3.0	<3.0	<3.0							
Cadmium (Cd)	2.0	ug	<2.0	<2.0	<2.0	<2.0							
Chromium (Cr)	5.0	ug	6.9	10.5	8.7	<5.0							
Cobalt (Co)	2.0	ug	<2.0	2.5	<2.0	<2.0							
Copper (Cu)	4.0	ug	117	123	70.7	<4.0							
Iron (Fe)	20	ug	276	3570	2280	28							
Lead (Pb)	3.0	ug	<3.0	5.4	3.6	<3.0							
Manganese (Mn)	1.0	ug	9.8	118	79.7	<1.0							
Nickel (Ni)	3.0	ug	3.8	6.6	5.9	<3.0							
Selenium (Se)	10	ug	<10	<10	<10	<10							
Vanadium (V)	5.0	ug	<5.0	6.3	6.0	<5.0							
Zinc (Zn)	5.0	ug	8.9	78.3	34.5	<5.0							
Particulates (Dustfall)													
Fixed Dustfall	0.10	mg/dm2.day											
Volatile Dustfall	0.10	mg/dm2.day											
Total Dustfall	0.10	mg/dm2.day											
Fixed Insoluble Dustfall	0.10	mg/dm2.day											
Volatile Insoluble Dustfall	0.10	mg/dm2.day											
Total Insoluble Dustfall	0.10	mg/dm2.day											
Fixed Soluble Dustfall	0.10	mg/dm2.day											
Volatile Soluble Dustfall	0.10	mg/dm2.day											
Total Soluble Dustfall	0.10	mg/dm2.day											
Metals (Dustfall)													
Aluminum (Al)-Total	0.000036	mg/dm2.day											
Antimony (Sb)-Total	0.0000024	mg/dm2.day											
Arsenic (As)-Total	0.0000036	mg/dm2.day											
Barium (Ba)-Total	0.00000060	mg/dm2.day											
Beryllium (Be)-Total	0.0000060	mg/dm2.day											
Bismuth (Bi)-Total	0.0000060	mg/dm2.day											
Boron (B)-Total	0.00012	mg/dm2.day											
Cadmium (Cd)-Total	0.00000060	mg/dm2.day											
Calcium (Ca)-Total	0.00024	mg/dm2.day											
Chromium (Cr)-Total	0.0000060	mg/dm2.day											
Cobalt (Co)-Total	0.0000012	mg/dm2.day											
Copper (Cu)-Total	0.0000060	mg/dm2.day											
Iron (Fe)-Total	0.00036	mg/dm2.day											
Lead (Pb)-Total	0.00000060	mg/dm2.day											
Lithium (Li)-Total	0.000060	mg/dm2.day											
Magnesium (Mg)-Total	0.000060	mg/dm2.day											
Manganese (Mn)-Total	0.0000012	mg/dm2.day											
Molybdenum (Mo)-Total	0.00000060	mg/dm2.day											
Nickel (Ni)-Total	0.0000060	mg/dm2.day											

Results Summary L2574300

Job Reference
Report To Sarah Flesher, New Gold Inc. Rainy River Proj
Date Received 7-Apr-2021 17:30
Report Date 4-May-2021 15:51
Report Version 1

Client Sample ID			NORTH-PM2.5-353	NORTH-PM2.5-354	NORTH-PM2.5-355	NORTHWEST-PM2.5-351	NORTHWEST-PM2.5-352	NORTHWEST-PM2.5-353	NORTHWEST-PM2.5-354	NORTHWEST-PM2.5-355	PM2.5-TRAVEL BLANK	NOP1-DUSTFALL-3	CP1-DUSTFALL-3	WCP1-DUSTFALL-3
Date Sampled			17-Mar-2021	23-Mar-2021	29-Mar-2021	5-Mar-2021	11-Mar-2021	17-Mar-2021	23-Mar-2021	29-Mar-2021	5-Apr-2021	31-Mar-2021	31-Mar-2021	26-Mar-2021
Time Sampled			0:00	0:00	0:00	0:00	0:00	0:00	0:00	0:00	0:00	0:00	0:00	0:00
ALS Sample ID			L2574300-24	L2574300-25	L2574300-26	L2574300-27	L2574300-28	L2574300-29	L2574300-30	L2574300-31	L2574300-32	L2574300-33	L2574300-34	L2574300-35
Parameter	Lowest Detection Limit	Units	Filter	Filter	Filter	Filter	Filter	Filter	Filter	Filter	Filter	Dustfall	Dustfall	Dustfall
Particulates (Filter)														
Total particulate	15	ug	29	40	98	44	34	76	110	148	<15			
Total Metals (Filter)														
Arsenic (As)	3.0	ug												
Cadmium (Cd)	2.0	ug												
Chromium (Cr)	5.0	ug												
Cobalt (Co)	2.0	ug												
Copper (Cu)	4.0	ug												
Iron (Fe)	20	ug												
Lead (Pb)	3.0	ug												
Manganese (Mn)	1.0	ug												
Nickel (Ni)	3.0	ug												
Selenium (Se)	10	ug												
Vanadium (V)	5.0	ug												
Zinc (Zn)	5.0	ug												
Particulates (Dustfall)														
Fixed Dustfall	0.10	mg/dm2.day										6.78	0.68	3.12
Volatile Dustfall	0.10	mg/dm2.day										0.11	<0.10	<0.13
Total Dustfall	0.10	mg/dm2.day										6.89	0.74	3.18
Fixed Insoluble Dustfall	0.10	mg/dm2.day										6.53	0.55	2.96
Volatile Insoluble Dustfall	0.10	mg/dm2.day										<0.10	<0.10	<0.13
Total Insoluble Dustfall	0.10	mg/dm2.day										6.58	0.54	2.99
Fixed Soluble Dustfall	0.10	mg/dm2.day										0.25	0.13	0.16
Volatile Soluble Dustfall	0.10	mg/dm2.day										<0.10	<0.10	<0.13
Total Soluble Dustfall	0.10	mg/dm2.day										0.31	0.20	0.19
Metals (Dustfall)														
Aluminum (Al)-Total	0.000036	mg/dm2.day										0.0424	0.00729	0.0254
Antimony (Sb)-Total	0.0000024	mg/dm2.day										<0.0000068	<0.0000027	<0.0000033
Arsenic (As)-Total	0.0000036	mg/dm2.day										<0.000027	<0.0000041	<0.000017
Barium (Ba)-Total	0.00000060	mg/dm2.day										0.000229	0.0000566	0.000121
Beryllium (Be)-Total	0.0000060	mg/dm2.day										<0.0000068	<0.0000068	<0.0000083
Bismuth (Bi)-Total	0.0000060	mg/dm2.day										<0.0000068	<0.0000068	<0.0000083
Boron (B)-Total	0.00012	mg/dm2.day										<0.00014	<0.00014	<0.00017
Cadmium (Cd)-Total	0.00000060	mg/dm2.day										0.00000323	<0.00000068	0.00000381
Calcium (Ca)-Total	0.00024	mg/dm2.day										0.0841	0.0197	0.0438
Chromium (Cr)-Total	0.0000060	mg/dm2.day										0.0000361	<0.0000068	0.0000254
Cobalt (Co)-Total	0.0000012	mg/dm2.day										0.0000065	0.0000019	0.0000060
Copper (Cu)-Total	0.0000060	mg/dm2.day										0.0000652	0.0000150	0.0000948
Iron (Fe)-Total	0.00036	mg/dm2.day										0.0222	0.00528	0.0188
Lead (Pb)-Total	0.00000060	mg/dm2.day										0.000185	0.0000147	0.0000763
Lithium (Li)-Total	0.000060	mg/dm2.day										<0.000068	<0.000068	<0.000083
Magnesium (Mg)-Total	0.000060	mg/dm2.day										0.0136	0.00350	0.0101
Manganese (Mn)-Total	0.0000012	mg/dm2.day										0.00141	0.000368	0.00107
Molybdenum (Mo)-Total	0.00000060	mg/dm2.day										0.00000639	0.00000113	0.00000211
Nickel (Ni)-Total	0.0000060	mg/dm2.day										0.0000227	<0.0000068	0.0000172

Results Summary L2574300

Job Reference
Report To Sarah Flesher, New Gold Inc. Rainy River Proj
Date Received 7-Apr-2021 17:30
Report Date 4-May-2021 15:51
Report Version 1

Client Sample ID			GH1-DUSTFALL-3	SPP1-DUSTFALL-13	SPP1-DUSTFALL-14	SPP1-DUSTFALL-15	SPP1-DUSTFALL-16	DUSTFALL-GALLINGER ROAD	DUSTFALL-TAIT ROAD (SOUTH)	DUSTFALL-NORTHWEST
Date Sampled			31-Mar-2021	10-Mar-2021	17-Mar-2021	24-Mar-2021	31-Mar-2021	31-Mar-2021	31-Mar-2021	31-Mar-2021
Time Sampled			0:00	0:00	0:00	0:00	0:00	0:00	0:00	0:00
ALS Sample ID			L2574300-36	L2574300-37	L2574300-38	L2574300-39	L2574300-40	L2574300-41	L2574300-42	L2574300-43
Parameter	Lowest Detection Limit	Units	Dustfall	Dustfall	Dustfall	Dustfall	Dustfall	Dustfall	Dustfall	Dustfall
Particulates (Filter)										
Total particulate	15	ug								
Total Metals (Filter)										
Arsenic (As)	3.0	ug								
Cadmium (Cd)	2.0	ug								
Chromium (Cr)	5.0	ug								
Cobalt (Co)	2.0	ug								
Copper (Cu)	4.0	ug								
Iron (Fe)	20	ug								
Lead (Pb)	3.0	ug								
Manganese (Mn)	1.0	ug								
Nickel (Ni)	3.0	ug								
Selenium (Se)	10	ug								
Vanadium (V)	5.0	ug								
Zinc (Zn)	5.0	ug								
Particulates (Dustfall)										
Fixed Dustfall	0.10	mg/dm2.day	1.52	2.58	3.33	2.98	4.94	0.96	1.02	0.61
Volatile Dustfall	0.10	mg/dm2.day	0.21	<0.43	<0.43	0.17	<0.43	0.12	0.18	<0.10
Total Dustfall	0.10	mg/dm2.day	1.73	2.78	3.15	3.05	4.84	1.08	1.19	0.62
Fixed Insoluble Dustfall	0.10	mg/dm2.day	1.47	2.16	2.80	2.49	4.45	0.86	0.92	0.48
Volatile Insoluble Dustfall	0.10	mg/dm2.day	0.15	<0.43	<0.43	<0.10	<0.43	<0.10	0.12	<0.10
Total Insoluble Dustfall	0.10	mg/dm2.day	1.62	2.26	2.74	2.38	4.42	0.95	1.05	0.46
Fixed Soluble Dustfall	0.10	mg/dm2.day	<0.10	<0.43	0.53	0.50	0.49	0.10	<0.10	0.13
Volatile Soluble Dustfall	0.10	mg/dm2.day	<0.10	<0.43	<0.43	0.17	<0.43	<0.10	<0.10	<0.10
Total Soluble Dustfall	0.10	mg/dm2.day	0.11	0.52	<0.43	0.66	<0.43	0.14	0.15	0.16
Metals (Dustfall)										
Aluminum (Al)-Total	0.000036	mg/dm2.day	0.0448	0.0201	0.0369	0.0447	0.0427	0.00746	0.0132	0.00689
Antimony (Sb)-Total	0.0000024	mg/dm2.day	<0.0000027	<0.000028	<0.000011	<0.000028	<0.000012	<0.0000024	<0.0000024	<0.0000027
Arsenic (As)-Total	0.0000036	mg/dm2.day	<0.000021	<0.000034	<0.000057	<0.000051	<0.000047	<0.0000036	<0.0000072	<0.0000041
Barium (Ba)-Total	0.00000060	mg/dm2.day	0.000225	0.000139	0.000146	0.000200	0.000306	0.0000683	0.000113	0.0000540
Beryllium (Be)-Total	0.0000060	mg/dm2.day	<0.0000068	<0.000028	<0.000028	<0.000028	<0.000030	<0.0000060	<0.0000060	<0.0000068
Bismuth (Bi)-Total	0.0000060	mg/dm2.day	<0.0000068	<0.000028	<0.000028	<0.000028	<0.000030	<0.0000060	<0.0000060	<0.0000068
Boron (B)-Total	0.00012	mg/dm2.day	<0.00014	<0.00057	<0.00057	<0.00057	<0.00059	<0.00012	<0.00012	<0.00014
Cadmium (Cd)-Total	0.00000060	mg/dm2.day	0.00000194	0.0000043	0.0000072	0.0000081	0.0000072	<0.00000060	0.00000114	<0.00000068
Calcium (Ca)-Total	0.00024	mg/dm2.day	0.0667	0.0526	0.0771	0.0632	0.0870	0.0212	0.0247	0.0175
Chromium (Cr)-Total	0.0000060	mg/dm2.day	0.0000521	<0.000028	0.000034	0.000048	0.000051	0.0000108	0.0000176	0.0000107
Cobalt (Co)-Total	0.0000012	mg/dm2.day	0.0000145	<0.0000057	0.0000103	0.0000128	0.0000102	0.0000032	0.0000051	0.0000026
Copper (Cu)-Total	0.0000060	mg/dm2.day	0.0000789	0.000072	0.000870	0.000147	<0.00015	0.0000275	0.0000392	0.0000248
Iron (Fe)-Total	0.00036	mg/dm2.day	0.0395	0.0163	0.0314	0.0459	0.0306	0.00748	0.0124	0.00619
Lead (Pb)-Total	0.00000060	mg/dm2.day	0.0000488	0.000173	0.000190	0.000193	0.000281	0.00000972	0.0000259	0.0000137
Lithium (Li)-Total	0.000060	mg/dm2.day	<0.000068	<0.00028	<0.00028	<0.00028	<0.00030	<0.000060	<0.000060	<0.000068
Magnesium (Mg)-Total	0.000060	mg/dm2.day	0.0192	0.00854	0.0169	0.0247	0.0179	0.00490	0.00728	0.00387
Manganese (Mn)-Total	0.0000012	mg/dm2.day	0.00138	0.00131	0.00202	0.00168	0.00186	0.000382	0.000582	0.000307
Molybdenum (Mo)-Total	0.00000060	mg/dm2.day	0.00000422	0.0000076	0.0000044	0.0000039	<0.0000059	0.00000106	0.00000129	0.00000146
Nickel (Ni)-Total	0.0000060	mg/dm2.day	0.0000399	<0.000028	0.000034	0.000046	0.000039	0.0000259	0.0000265	0.0000082

Results Summary L2574300

Job Reference
Report To Sarah Flesher, New Gold Inc. Rainy River Project
Date Received 7-Apr-2021 17:30
Report Date 4-May-2021 15:51
Report Version 1

Client Sample ID			SOUTH-TSP-351	SOUTH-TSP-352	SOUTH-TSP-353	SOUTH-TSP-354	SOUTH-TSP-355	NORTH-TSP-351	NORTH-TSP-352	NORTH-TSP-353	NORTH-TSP-354	NORTH-TSP-355	NORTHWEST-TSP-351	NORTHWEST-TSP-352
Date Sampled			5-Mar-2021	11-Mar-2021	17-Mar-2021	23-Mar-2021	29-Mar-2021	5-Mar-2021	11-Mar-2021	17-Mar-2021	23-Mar-2021	29-Mar-2021	5-Mar-2021	11-Mar-2021
Time Sampled			0:00	0:00	0:00	0:00	0:00	0:00	0:00	0:00	0:00	0:00	0:00	0:00
ALS Sample ID			L2574300-1	L2574300-2	L2574300-3	L2574300-4	L2574300-5	L2574300-6	L2574300-7	L2574300-8	L2574300-9	L2574300-10	L2574300-11	L2574300-12
Parameter	Lowest Detection Limit	Units	Filter	Filter	Filter	Filter	Filter	Filter	Filter	Filter	Filter	Filter	Filter	Filter
Phosphorus (P)-Total	0.00060	mg/dm2.day												
Potassium (K)-Total	0.00060	mg/dm2.day												
Selenium (Se)-Total	0.000012	mg/dm2.day												
Silicon (Si)-Total	0.00060	mg/dm2.day												
Silver (Ag)-Total	0.00000012	mg/dm2.day												
Sodium (Na)-Total	0.00060	mg/dm2.day												
Strontium (Sr)-Total	0.0000012	mg/dm2.day												
Thallium (Tl)-Total	0.0000012	mg/dm2.day												
Tin (Sn)-Total	0.0000012	mg/dm2.day												
Titanium (Ti)-Total	0.00012	mg/dm2.day												
Uranium (U)-Total	0.00000057	mg/dm2.day												
Vanadium (V)-Total	0.000012	mg/dm2.day												
Zinc (Zn)-Total	0.000036	mg/dm2.day												

Qualifier Legend

DLB	Detection Limit Raised. Analyte detected at comparable level in Method Blank.
DLDF	Detection Limit Raised: Dustfall sample isopropanol preservative caused matrix interference on Arsenic and Selenium.
DLM	Detection Limit Adjusted due to sample matrix effects (e.g. chemical interference, colour, turbidity).

Results Summary L2574300

Job Reference
Report To Sarah Flesher, New Gold Inc. Rainy River Proj
Date Received 7-Apr-2021 17:30
Report Date 4-May-2021 15:51
Report Version 1

Client Sample ID			NORTHWEST-TSP-353	NORTHWEST-TSP-354	NORTHWEST-TSP-355	TSP-TRAVEL BLANK	SOUTH-PM2.5-351	SOUTH-PM2.5-352	SOUTH-PM2.5-353	SOUTH-PM2.5-354	SOUTH-PM2.5-355	NORTH-PM2.5-351	NORTH-PM2.5-352
Date Sampled			17-Mar-2021	23-Mar-2021	29-Mar-2021	5-Apr-2021	5-Mar-2021	11-Mar-2021	17-Mar-2021	23-Mar-2021	29-Mar-2021	5-Mar-2021	11-Mar-2021
Time Sampled			0:00	0:00	0:00	0:00	0:00	0:00	0:00	0:00	0:00	0:00	0:00
ALS Sample ID			L2574300-13	L2574300-14	L2574300-15	L2574300-16	L2574300-17	L2574300-18	L2574300-19	L2574300-20	L2574300-21	L2574300-22	L2574300-23
Parameter	Lowest Detection Limit	Units	Filter	Filter	Filter	Filter	Filter	Filter	Filter	Filter	Filter	Filter	Filter
Phosphorus (P)-Total	0.00060	mg/dm2.day											
Potassium (K)-Total	0.00060	mg/dm2.day											
Selenium (Se)-Total	0.000012	mg/dm2.day											
Silicon (Si)-Total	0.00060	mg/dm2.day											
Silver (Ag)-Total	0.00000012	mg/dm2.day											
Sodium (Na)-Total	0.00060	mg/dm2.day											
Strontium (Sr)-Total	0.0000012	mg/dm2.day											
Thallium (Tl)-Total	0.0000012	mg/dm2.day											
Tin (Sn)-Total	0.0000012	mg/dm2.day											
Titanium (Ti)-Total	0.00012	mg/dm2.day											
Uranium (U)-Total	0.00000057	mg/dm2.day											
Vanadium (V)-Total	0.000012	mg/dm2.day											
Zinc (Zn)-Total	0.000036	mg/dm2.day											

Qualifier Legend

DLB	Detection Limit Raised. Analyte detected at cc
DLDF	Detection Limit Raised: Dustfall sample isopro
DLM	Detection Limit Adjusted due to sample matrix

Results Summary L2574300

Job Reference
Report To Sarah Flesher, New Gold Inc. Rainy River Proj
Date Received 7-Apr-2021 17:30
Report Date 4-May-2021 15:51
Report Version 1

Client Sample ID			NORTH-PM2.5-353	NORTH-PM2.5-354	NORTH-PM2.5-355	NORTHWEST-PM2.5-351	NORTHWEST-PM2.5-352	NORTHWEST-PM2.5-353	NORTHWEST-PM2.5-354	NORTHWEST-PM2.5-355	PM2.5-TRAVEL BLANK	NOP1-DUSTFALL-3	CP1-DUSTFALL-3	WCP1-DUSTFALL-3
Date Sampled			17-Mar-2021	23-Mar-2021	29-Mar-2021	5-Mar-2021	11-Mar-2021	17-Mar-2021	23-Mar-2021	29-Mar-2021	5-Apr-2021	31-Mar-2021	31-Mar-2021	26-Mar-2021
Time Sampled			0:00	0:00	0:00	0:00	0:00	0:00	0:00	0:00	0:00	0:00	0:00	0:00
ALS Sample ID			L2574300-24	L2574300-25	L2574300-26	L2574300-27	L2574300-28	L2574300-29	L2574300-30	L2574300-31	L2574300-32	L2574300-33	L2574300-34	L2574300-35
Parameter	Lowest Detection Limit	Units	Filter	Filter	Filter	Filter	Filter	Filter	Filter	Filter	Filter	Dustfall	Dustfall	Dustfall
Phosphorus (P)-Total	0.00060	mg/dm2.day										<0.00068	<0.00068	<0.00083
Potassium (K)-Total	0.00060	mg/dm2.day										0.0156	0.00273	0.00832
Selenium (Se)-Total	0.000012	mg/dm2.day										<0.000014	<0.000014	<0.000017
Silicon (Si)-Total	0.00060	mg/dm2.day										0.0652	<0.018	0.0381
Silver (Ag)-Total	0.00000012	mg/dm2.day										0.00000242	0.00000026	0.00000204
Sodium (Na)-Total	0.00060	mg/dm2.day										0.00491	0.00219	0.00304
Strontium (Sr)-Total	0.0000012	mg/dm2.day										0.000235	0.0000520	0.000112
Thallium (Tl)-Total	0.0000012	mg/dm2.day										<0.0000014	<0.0000014	<0.0000017
Tin (Sn)-Total	0.0000012	mg/dm2.day										<0.0000014	<0.0000014	<0.0000017
Titanium (Ti)-Total	0.00012	mg/dm2.day										0.00069	<0.00014	0.00041
Uranium (U)-Total	0.00000057	mg/dm2.day										0.0000012	<0.00000068	<0.00000083
Vanadium (V)-Total	0.000012	mg/dm2.day										0.000053	<0.000014	0.000040
Zinc (Zn)-Total	0.000036	mg/dm2.day										0.000782	0.000215	0.000927

Qualifier Legend

DLB	Detection Limit Raised. Analyte detected at cc
DLDF	Detection Limit Raised: Dustfall sample isoprop
DLM	Detection Limit Adjusted due to sample matrix

Results Summary L2574300

Job Reference
Report To Sarah Flesher, New Gold Inc. Rainy River Proj
Date Received 7-Apr-2021 17:30
Report Date 4-May-2021 15:51
Report Version 1

Client Sample ID			GH1-DUSTFALL-3	SPP1-DUSTFALL-13	SPP1-DUSTFALL-14	SPP1-DUSTFALL-15	SPP1-DUSTFALL-16	DUSTFALL-GALLINGER ROAD	DUSTFALL-TAIT ROAD (SOUTH)	DUSTFALL-NORTHWEST
Date Sampled			31-Mar-2021	10-Mar-2021	17-Mar-2021	24-Mar-2021	31-Mar-2021	31-Mar-2021	31-Mar-2021	31-Mar-2021
Time Sampled			0:00	0:00	0:00	0:00	0:00	0:00	0:00	0:00
ALS Sample ID			L2574300-36	L2574300-37	L2574300-38	L2574300-39	L2574300-40	L2574300-41	L2574300-42	L2574300-43
Parameter	Lowest Detection Limit	Units	Dustfall	Dustfall	Dustfall	Dustfall	Dustfall	Dustfall	Dustfall	Dustfall
Phosphorus (P)-Total	0.00060	mg/dm2.day	<0.0014	<0.0028	<0.0028	<0.0028	<0.0030	<0.00060	<0.0012	<0.00068
Potassium (K)-Total	0.00060	mg/dm2.day	0.0103	0.0074	0.0091	0.0127	0.0191	0.00323	0.00463	0.00247
Selenium (Se)-Total	0.000012	mg/dm2.day	<0.000014	<0.000057	<0.000057	<0.000057	<0.000059	<0.000012	<0.000012	<0.000014
Silicon (Si)-Total	0.00060	mg/dm2.day	0.0676	0.0291	0.048	0.0626	0.0721	<0.019	0.0267	0.0133
Silver (Ag)-Total	0.00000012	mg/dm2.day	0.00000143	0.00000202	0.00000612	0.00000563	0.00000699	0.00000028	0.00000038	<0.00000014
Sodium (Na)-Total	0.00060	mg/dm2.day	0.00592	0.0048	0.0057	0.0054	0.0083	0.00276	0.00356	0.00227
Strontium (Sr)-Total	0.0000012	mg/dm2.day	0.000202	0.000123	0.000162	0.000192	0.000226	0.0000579	0.0000762	0.0000452
Thallium (Tl)-Total	0.0000012	mg/dm2.day	<0.0000014	<0.0000057	<0.0000057	<0.0000057	<0.0000059	<0.0000012	<0.0000012	<0.0000014
Tin (Sn)-Total	0.0000012	mg/dm2.day	0.0000016	<0.0000057	<0.0000057	<0.0000057	<0.0000059	<0.0000012	<0.0000012	<0.0000014
Titanium (Ti)-Total	0.00012	mg/dm2.day	0.00078	<0.00057	0.00059	0.00069	0.00064	0.00017	<0.00036	<0.00014
Uranium (U)-Total	0.00000057	mg/dm2.day	<0.0000014	<0.0000023	<0.0000023	0.00000072	<0.0000030	<0.00000095	<0.0000011	<0.0000011
Vanadium (V)-Total	0.000012	mg/dm2.day	0.000081	<0.000057	<0.000057	0.000064	<0.000059	0.000017	0.000027	0.000015
Zinc (Zn)-Total	0.000036	mg/dm2.day	0.000523	0.00109	0.00188	0.00194	0.00183	0.000100	0.000277	0.000107

Qualifier Legend

DLB	Detection Limit Raised. Analyte detected at cc
DLDF	Detection Limit Raised: Dustfall sample isoprop
DLM	Detection Limit Adjusted due to sample matrix

Quality Control L2574300

Job Reference
Report To Sarah Flesher, New Gold Inc. Rainy River Project
Date Received 7-Apr-2021 17:30
Report Date 4-May-2021 15:51
Report Version 1

QC Type	Analyte	QC Lot #	ALS QC ID	Result	Target	Units	%	Limit	Units	Qual	Eval	Matrix	Class
Total Metals (Filter)													
LCS	Arsenic (As)	1461071	WG3518485-2	41.3	45	ug	91.8	80-120	%		✓	Filter	Total Metals
LCS	Cadmium (Cd)	1461071	WG3518485-2	21.5	22.5	ug	95.6	80-120	%		✓	Filter	Total Metals
LCS	Chromium (Cr)	1461071	WG3518485-2	42.5	45	ug	94.4	80-120	%		✓	Filter	Total Metals
LCS	Cobalt (Co)	1461071	WG3518485-2	41.2	45	ug	91.6	80-120	%		✓	Filter	Total Metals
LCS	Copper (Cu)	1461071	WG3518485-2	42.5	45	ug	94.5	80-120	%		✓	Filter	Total Metals
LCS	Iron (Fe)	1461071	WG3518485-2	209	225	ug	93.0	80-120	%		✓	Filter	Total Metals
LCS	Lead (Pb)	1461071	WG3518485-2	43.7	45	ug	97.0	80-120	%		✓	Filter	Total Metals
LCS	Manganese (Mn)	1461071	WG3518485-2	40.6	45	ug	90.2	80-120	%		✓	Filter	Total Metals
LCS	Nickel (Ni)	1461071	WG3518485-2	42.4	45	ug	94.3	80-120	%		✓	Filter	Total Metals
LCS	Selenium (Se)	1461071	WG3518485-2	44.0	45	ug	97.7	80-120	%		✓	Filter	Total Metals
LCS	Vanadium (V)	1461071	WG3518485-2	43.8	45	ug	97.4	80-120	%		✓	Filter	Total Metals
LCS	Zinc (Zn)	1461071	WG3518485-2	87.8	90	ug	97.5	80-120	%		✓	Filter	Total Metals
Particulates (Filter)													
MB	Total particulate	1459976	WG3517029-1	<100		ug	-	<100	ug		✓	Filter	Particulates
MB	Total particulate	1464442	WG3523068-1	<15		ug	-	<15	ug		✓	Filter	Particulates
MB	Total particulate	1464442	WG3523068-2	<15		ug	-	<15	ug		✓	Filter	Particulates
Total Metals (Filter)													
MB	Arsenic (As)	1461071	WG3518485-1	<3.0		ug	-	<3.0	ug		✓	Filter	Total Metals
MB	Cadmium (Cd)	1461071	WG3518485-1	<0.027		ug	-	<0.027	ug		✓	Filter	Total Metals
MB	Chromium (Cr)	1461071	WG3518485-1	<3.4		ug	-	<3.4	ug		✓	Filter	Total Metals
MB	Cobalt (Co)	1461071	WG3518485-1	<0.030		ug	-	<0.030	ug		✓	Filter	Total Metals
MB	Copper (Cu)	1461071	WG3518485-1	<1.0		ug	-	<1.0	ug		✓	Filter	Total Metals
MB	Iron (Fe)	1461071	WG3518485-1	<12		ug	-	<12	ug		✓	Filter	Total Metals
MB	Lead (Pb)	1461071	WG3518485-1	<0.12		ug	-	<0.12	ug		✓	Filter	Total Metals
MB	Manganese (Mn)	1461071	WG3518485-1	<0.45		ug	-	<0.45	ug		✓	Filter	Total Metals
MB	Nickel (Ni)	1461071	WG3518485-1	<0.25		ug	-	<0.25	ug		✓	Filter	Total Metals
MB	Selenium (Se)	1461071	WG3518485-1	<1.3		ug	-	<1.3	ug		✓	Filter	Total Metals
MB	Vanadium (V)	1461071	WG3518485-1	<5.0		ug	-	<10.0	ug		✓	Filter	Total Metals
MB	Zinc (Zn)	1461071	WG3518485-1	<4.5		ug	-	<4.5	ug		✓	Filter	Total Metals
Metals (Dustfall)													
LCS	Aluminum (Al)-Total	1465519	WG3524467-6	0.0559	0.0524	mg/dm2.day	106.6	80-120	%		✓	Dustfall	Metals
LCS	Aluminum (Al)-Total	1465520	WG3524471-2	0.0455	0.0524	mg/dm2.day	86.8	80-120	%		✓	Dustfall	Metals
LCS	Aluminum (Al)-Total	1467169	WG3526704-2	0.0537	0.0524	mg/dm2.day	102.6	80-120	%		✓	Dustfall	Metals
LCS	Antimony (Sb)-Total	1465519	WG3524467-6	0.0279	0.0262	mg/dm2.day	106.4	80-120	%		✓	Dustfall	Metals
LCS	Antimony (Sb)-Total	1465520	WG3524471-2	0.0229	0.0262	mg/dm2.day	87.2	80-120	%		✓	Dustfall	Metals
LCS	Antimony (Sb)-Total	1467169	WG3526704-2	0.0274	0.0262	mg/dm2.day	104.6	80-120	%		✓	Dustfall	Metals
LCS	Arsenic (As)-Total	1465519	WG3524467-6	0.0269	0.0262	mg/dm2.day	102.7	80-120	%		✓	Dustfall	Metals
LCS	Arsenic (As)-Total	1465520	WG3524471-2	0.0214	0.0262	mg/dm2.day	81.8	80-120	%		✓	Dustfall	Metals
LCS	Arsenic (As)-Total	1467169	WG3526704-2	0.0280	0.0262	mg/dm2.day	106.7	80-120	%		✓	Dustfall	Metals
LCS	Barium (Ba)-Total	1465519	WG3524467-6	0.00668	0.00655	mg/dm2.day	102.0	80-120	%		✓	Dustfall	Metals
LCS	Barium (Ba)-Total	1465520	WG3524471-2	0.00541	0.00655	mg/dm2.day	82.6	80-120	%		✓	Dustfall	Metals
LCS	Barium (Ba)-Total	1467169	WG3526704-2	0.00692	0.00655	mg/dm2.day	105.6	80-120	%		✓	Dustfall	Metals
LCS	Beryllium (Be)-Total	1465519	WG3524467-6	0.00266	0.00262	mg/dm2.day	101.7	80-120	%		✓	Dustfall	Metals
LCS	Beryllium (Be)-Total	1465520	WG3524471-2	0.00225	0.00262	mg/dm2.day	85.9	80-120	%		✓	Dustfall	Metals
LCS	Beryllium (Be)-Total	1467169	WG3526704-2	0.00269	0.00262	mg/dm2.day	102.7	80-120	%		✓	Dustfall	Metals
LCS	Bismuth (Bi)-Total	1465519	WG3524467-6	0.0290	0.0262	mg/dm2.day	110.6	80-120	%		✓	Dustfall	Metals
LCS	Bismuth (Bi)-Total	1465520	WG3524471-2	0.0237	0.0262	mg/dm2.day	90.6	80-120	%		✓	Dustfall	Metals
LCS	Bismuth (Bi)-Total	1467169	WG3526704-2	0.0284	0.0262	mg/dm2.day	108.2	80-120	%		✓	Dustfall	Metals
LCS	Boron (B)-Total	1465519	WG3524467-6	0.0261	0.0262	mg/dm2.day	99.5	80-120	%		✓	Dustfall	Metals
LCS	Boron (B)-Total	1465520	WG3524471-2	0.0218	0.0262	mg/dm2.day	83.1	80-120	%		✓	Dustfall	Metals
LCS	Boron (B)-Total	1467169	WG3526704-2	0.0254	0.0262	mg/dm2.day	96.8	80-120	%		✓	Dustfall	Metals
LCS	Cadmium (Cd)-Total	1465519	WG3524467-6	0.00268	0.00262	mg/dm2.day	102.1	80-120	%		✓	Dustfall	Metals
LCS	Cadmium (Cd)-Total	1465520	WG3524471-2	0.00216	0.00262	mg/dm2.day	82.3	80-120	%		✓	Dustfall	Metals
LCS	Cadmium (Cd)-Total	1467169	WG3526704-2	0.00280	0.00262	mg/dm2.day	106.9	80-120	%		✓	Dustfall	Metals
LCS	Calcium (Ca)-Total	1465519	WG3524467-6	1.33	1.31	mg/dm2.day	101.2	80-120	%		✓	Dustfall	Metals
LCS	Calcium (Ca)-Total	1465520	WG3524471-2	1.10	1.31	mg/dm2.day	84.1	80-120	%		✓	Dustfall	Metals
LCS	Calcium (Ca)-Total	1467169	WG3526704-2	1.33	1.31	mg/dm2.day	101.7	80-120	%		✓	Dustfall	Metals
LCS	Chromium (Cr)-Total	1465519	WG3524467-6	0.00676	0.00655	mg/dm2.day	103.2	80-120	%		✓	Dustfall	Metals
LCS	Chromium (Cr)-Total	1465520	WG3524471-2	0.00549	0.00655	mg/dm2.day	83.8	80-120	%		✓	Dustfall	Metals
LCS	Chromium (Cr)-Total	1467169	WG3526704-2	0.00700	0.00655	mg/dm2.day	106.8	80-120	%		✓	Dustfall	Metals
LCS	Cobalt (Co)-Total	1465519	WG3524467-6	0.00670	0.00655	mg/dm2.day	102.3	80-120	%		✓	Dustfall	Metals
LCS	Cobalt (Co)-Total	1465520	WG3524471-2	0.00544	0.00655	mg/dm2.day	83.0	80-120	%		✓	Dustfall	Metals
LCS	Cobalt (Co)-Total	1467169	WG3526704-2	0.00702	0.00655	mg/dm2.day	107.2	80-120	%		✓	Dustfall	Metals
LCS	Copper (Cu)-Total	1465519	WG3524467-6	0.00683	0.00655	mg/dm2.day	104.2	80-120	%		✓	Dustfall	Metals
LCS	Copper (Cu)-Total	1465520	WG3524471-2	0.00545	0.00655	mg/dm2.day	83.1	80-120	%		✓	Dustfall	Metals
LCS	Copper (Cu)-Total	1467169	WG3526704-2	0.00695	0.00655	mg/dm2.day	106.2	80-120	%		✓	Dustfall	Metals
LCS	Iron (Fe)-Total	1465519	WG3524467-6	0.0273	0.0262	mg/dm2.day	104.3	80-120	%		✓	Dustfall	Metals
LCS	Iron (Fe)-Total	1465520	WG3524471-2	0.0214	0.0262	mg/dm2.day	81.7	80-120	%		✓	Dustfall	Metals
LCS	Iron (Fe)-Total	1467169	WG3526704-2	0.0271	0.0262	mg/dm2.day	103.6	80-120	%		✓	Dustfall	Metals
LCS	Lead (Pb)-Total	1465519	WG3524467-6	0.0137	0.0131	mg/dm2.day	104.8	80-120	%		✓	Dustfall	Metals
LCS	Lead (Pb)-Total	1465520	WG3524471-2	0.0112	0.0131	mg/dm2.day	85.5	80-120	%		✓	Dustfall	Metals
LCS	Lead (Pb)-Total	1467169	WG3526704-2	0.0134	0.0131	mg/dm2.day	102.5	80-120	%		✓	Dustfall	Metals
LCS	Lithium (Li)-Total	1465519	WG3524467-6	0.00671	0.00655	mg/dm2.day	102.4	80-120	%		✓	Dustfall	Metals
LCS	Lithium (Li)-Total	1465520	WG3524471-2	0.00564	0.00655	mg/dm2.day	86.1	80-120	%		✓	Dustfall	Metals
LCS	Lithium (Li)-Total	1467169	WG3526704-2	0.00642	0.00655	mg/dm2.day	98.0	80-120	%		✓	Dustfall	Metals
LCS	Magnesium (Mg)-Total	1465519	WG3524467-6	1.35	1.31	mg/dm2.day	103.3	80-120	%		✓	Dustfall	Metals
LCS	Magnesium (Mg)-Total	1465520	WG3524471-2	1.07	1.31	mg/dm2.day	82.0	80-120	%		✓	Dustfall	Metals
LCS	Magnesium (Mg)-Total	1467169	WG3526704-2	1.44	1.31	mg/dm2.day	110.3	80-120	%		✓	Dustfall	Metals
LCS	Manganese (Mn)-Total	1465519	WG3524467-6	0.00663	0.00655	mg/dm2.day	101.3	80-120	%		✓	Dustfall	Metals
LCS	Manganese (Mn)-Total	1465520	WG3524471-2	0.00531	0.00655	mg/dm2.day	81.1	80-120	%		✓	Dustfall	Metals
LCS	Manganese (Mn)-Total	1467169	WG3526704-2	0.00687	0.00655	mg/dm2.day	104.9	80-120	%		✓	Dustfall	Metals
LCS	Molybdenum (Mo)-Total	1465519	WG3524467-6	0.00681	0.00655	mg/dm2.day	103.9	80-120	%		✓	Dustfall	Metals
LCS	Molybdenum (Mo)-Total	1465520	WG3524471-2	0.00563	0.00655	mg/dm2.day	86.0	80-120	%		✓	Dustfall	Metals

Quality Control L2574300

Job Reference
Report To Sarah Flesher, New Gold Inc. Rainy River Project
Date Received 7-Apr-2021 17:30
Report Date 4-May-2021 15:51
Report Version 1

QC Type	Analyte	QC Lot #	ALS QC ID	Result	Target	Units	%	Limit	Units	Qual	Eval	Matrix	Class
LCS	Molybdenum (Mo)-Total	1467169	WG3526704-2	0.00677	0.00655	mg/dm2.day	103.3	80-120	%		✓	Dustfall	Metals
LCS	Nickel (Ni)-Total	1465519	WG3524467-6	0.0134	0.0131	mg/dm2.day	102.4	80-120	%		✓	Dustfall	Metals
LCS	Nickel (Ni)-Total	1465520	WG3524471-2	0.0108	0.0131	mg/dm2.day	82.5	80-120	%		✓	Dustfall	Metals
LCS	Nickel (Ni)-Total	1467169	WG3526704-2	0.0137	0.0131	mg/dm2.day	105.0	80-120	%		✓	Dustfall	Metals
LCS	Phosphorus (P)-Total	1465519	WG3524467-6	0.285	0.262	mg/dm2.day	108.8	80-120	%		✓	Dustfall	Metals
LCS	Phosphorus (P)-Total	1465520	WG3524471-2	0.229	0.262	mg/dm2.day	87.5	80-120	%		✓	Dustfall	Metals
LCS	Phosphorus (P)-Total	1467169	WG3526704-2	0.277	0.262	mg/dm2.day	105.6	80-120	%		✓	Dustfall	Metals
LCS	Potassium (K)-Total	1465519	WG3524467-6	1.37	1.31	mg/dm2.day	104.9	80-120	%		✓	Dustfall	Metals
LCS	Potassium (K)-Total	1465520	WG3524471-2	1.11	1.31	mg/dm2.day	84.6	80-120	%		✓	Dustfall	Metals
LCS	Potassium (K)-Total	1467169	WG3526704-2	1.38	1.31	mg/dm2.day	105.2	80-120	%		✓	Dustfall	Metals
LCS	Selenium (Se)-Total	1465519	WG3524467-6	0.0282	0.0262	mg/dm2.day	107.8	80-120	%		✓	Dustfall	Metals
LCS	Selenium (Se)-Total	1465520	WG3524471-2	0.0211	0.0262	mg/dm2.day	80.4	80-120	%		✓	Dustfall	Metals
LCS	Selenium (Se)-Total	1467169	WG3526704-2	0.0272	0.0262	mg/dm2.day	103.9	80-120	%		✓	Dustfall	Metals
LCS	Silicon (Si)-Total	1465519	WG3524467-6	0.287	0.262	mg/dm2.day	109.5	80-120	%		✓	Dustfall	Metals
LCS	Silicon (Si)-Total	1465520	WG3524471-2	0.218	0.262	mg/dm2.day	83.3	80-120	%		✓	Dustfall	Metals
LCS	Silicon (Si)-Total	1467169	WG3526704-2	0.259	0.262	mg/dm2.day	99.0	80-120	%		✓	Dustfall	Metals
LCS	Silver (Ag)-Total	1465519	WG3524467-6	0.00260	0.00262	mg/dm2.day	99.2	80-120	%		✓	Dustfall	Metals
LCS	Silver (Ag)-Total	1465520	WG3524471-2	0.00214	0.00262	mg/dm2.day	81.9	80-120	%		✓	Dustfall	Metals
LCS	Silver (Ag)-Total	1467169	WG3526704-2	0.00258	0.00262	mg/dm2.day	98.5	80-120	%		✓	Dustfall	Metals
LCS	Sodium (Na)-Total	1465519	WG3524467-6	1.38	1.31	mg/dm2.day	105.4	80-120	%		✓	Dustfall	Metals
LCS	Sodium (Na)-Total	1465520	WG3524471-2	1.13	1.31	mg/dm2.day	86.5	80-120	%		✓	Dustfall	Metals
LCS	Sodium (Na)-Total	1467169	WG3526704-2	1.36	1.31	mg/dm2.day	103.8	80-120	%		✓	Dustfall	Metals
LCS	Strontium (Sr)-Total	1465519	WG3524467-6	0.00713	0.00655	mg/dm2.day	108.8	80-120	%		✓	Dustfall	Metals
LCS	Strontium (Sr)-Total	1465520	WG3524471-2	0.00582	0.00655	mg/dm2.day	88.9	80-120	%		✓	Dustfall	Metals
LCS	Strontium (Sr)-Total	1467169	WG3526704-2	0.00654	0.00655	mg/dm2.day	99.8	80-120	%		✓	Dustfall	Metals
LCS	Thallium (Tl)-Total	1465519	WG3524467-6	0.0280	0.0262	mg/dm2.day	106.8	80-120	%		✓	Dustfall	Metals
LCS	Thallium (Tl)-Total	1465520	WG3524471-2	0.0227	0.0262	mg/dm2.day	86.7	80-120	%		✓	Dustfall	Metals
LCS	Thallium (Tl)-Total	1467169	WG3526704-2	0.0276	0.0262	mg/dm2.day	105.5	80-120	%		✓	Dustfall	Metals
LCS	Tin (Sn)-Total	1465519	WG3524467-6	0.0129	0.0131	mg/dm2.day	98.8	80-120	%		✓	Dustfall	Metals
LCS	Tin (Sn)-Total	1465520	WG3524471-2	0.0106	0.0131	mg/dm2.day	80.7	80-120	%		✓	Dustfall	Metals
LCS	Tin (Sn)-Total	1467169	WG3526704-2	0.0131	0.0131	mg/dm2.day	100.3	80-120	%		✓	Dustfall	Metals
LCS	Titanium (Ti)-Total	1465519	WG3524467-6	0.00682	0.00655	mg/dm2.day	104.1	80-120	%		✓	Dustfall	Metals
LCS	Titanium (Ti)-Total	1465520	WG3524471-2	0.00541	0.00655	mg/dm2.day	82.7	80-120	%		✓	Dustfall	Metals
LCS	Titanium (Ti)-Total	1467169	WG3526704-2	0.00664	0.00655	mg/dm2.day	101.4	80-120	%		✓	Dustfall	Metals
LCS	Uranium (U)-Total	1465519	WG3524467-6	0.000142	0.000131	mg/dm2.day	108.7	80-120	%		✓	Dustfall	Metals
LCS	Uranium (U)-Total	1465520	WG3524471-2	0.000116	0.000131	mg/dm2.day	88.6	80-120	%		✓	Dustfall	Metals
LCS	Uranium (U)-Total	1467169	WG3526704-2	0.000125	0.000131	mg/dm2.day	95.3	80-120	%		✓	Dustfall	Metals
LCS	Vanadium (V)-Total	1465519	WG3524467-6	0.0134	0.0131	mg/dm2.day	102.4	80-120	%		✓	Dustfall	Metals
LCS	Vanadium (V)-Total	1465520	WG3524471-2	0.0108	0.0131	mg/dm2.day	82.1	80-120	%		✓	Dustfall	Metals
LCS	Vanadium (V)-Total	1467169	WG3526704-2	0.0139	0.0131	mg/dm2.day	106.4	80-120	%		✓	Dustfall	Metals
LCS	Zinc (Zn)-Total	1465519	WG3524467-6	0.0131	0.0131	mg/dm2.day	99.8	80-120	%		✓	Dustfall	Metals
LCS	Zinc (Zn)-Total	1465520	WG3524471-2	0.0105	0.0131	mg/dm2.day	80.1	80-120	%		✓	Dustfall	Metals
LCS	Zinc (Zn)-Total	1467169	WG3526704-2	0.0143	0.0131	mg/dm2.day	109.4	80-120	%		✓	Dustfall	Metals

Quality Control L2574300

Job Reference
Report To Sarah Flesher, New Gold Inc. Rainy River Project
Date Received 7-Apr-2021 17:30
Report Date 4-May-2021 15:51
Report Version 1

QC Type	Analyte	QC Lot #	ALS QC ID	Result	Target	Units	%	Limit	Units	Qual	Eval	Matrix	Class
Particulates (Dustfall)													
MB	Fixed Dustfall	1465820	WG3524880-1	<0.10		mg/dm2.day	-	<0.10	mg/dm2.day		✓	Dustfall	Particulates
MB	Volatile Dustfall	1465820	WG3524880-1	<0.10		mg/dm2.day	-	<0.10	mg/dm2.day		✓	Dustfall	Particulates
MB	Total Dustfall	1465820	WG3524880-1	<0.10		mg/dm2.day	-	<0.10	mg/dm2.day		✓	Dustfall	Particulates
MB	Fixed Insoluble Dustfall	1465820	WG3524880-1	<0.10		mg/dm2.day	-	<0.10	mg/dm2.day		✓	Dustfall	Particulates
MB	Volatile Insoluble Dustfall	1465820	WG3524880-1	<0.10		mg/dm2.day	-	<0.10	mg/dm2.day		✓	Dustfall	Particulates
MB	Total Insoluble Dustfall	1465820	WG3524880-1	<0.10		mg/dm2.day	-	<0.10	mg/dm2.day		✓	Dustfall	Particulates
MB	Fixed Soluble Dustfall	1465820	WG3524880-1	<0.10		mg/dm2.day	-	<0.10	mg/dm2.day		✓	Dustfall	Particulates
MB	Volatile Soluble Dustfall	1465820	WG3524880-1	<0.10		mg/dm2.day	-	<0.10	mg/dm2.day		✓	Dustfall	Particulates
MB	Total Soluble Dustfall	1465820	WG3524880-1	<0.10		mg/dm2.day	-	<0.10	mg/dm2.day		✓	Dustfall	Particulates
Metals (Dustfall)													
MB	Aluminum (Al)-Total	1465519	WG3524467-5	<0.000079		mg/dm2.day	-	<0.000079	mg/dm2.day		✓	Dustfall	Metals
MB	Aluminum (Al)-Total	1465520	WG3524471-1	<0.000079		mg/dm2.day	-	<0.000079	mg/dm2.day		✓	Dustfall	Metals
MB	Aluminum (Al)-Total	1467169	WG3526704-1	0.000108		mg/dm2.day	-	<0.000079	mg/dm2.day	B	×	Dustfall	Metals
MB	Antimony (Sb)-Total	1465519	WG3524467-5	0.0000044		mg/dm2.day	-	<0.0000026	mg/dm2.day	MB-LOR	×	Dustfall	Metals
MB	Antimony (Sb)-Total	1465520	WG3524471-1	0.0000158		mg/dm2.day	-	<0.0000026	mg/dm2.day	MB-LOR	×	Dustfall	Metals
MB	Antimony (Sb)-Total	1467169	WG3526704-1	0.0000036		mg/dm2.day	-	<0.0000026	mg/dm2.day	MB-LOR	×	Dustfall	Metals
MB	Arsenic (As)-Total	1465519	WG3524467-5	0.0000040		mg/dm2.day	-	<0.0000026	mg/dm2.day	MB-LOR	×	Dustfall	Metals
MB	Arsenic (As)-Total	1465520	WG3524471-1	0.0000088		mg/dm2.day	-	<0.0000026	mg/dm2.day	MB-LOR	×	Dustfall	Metals
MB	Arsenic (As)-Total	1467169	WG3526704-1	0.0000158		mg/dm2.day	-	<0.0000026	mg/dm2.day	MB-LOR	×	Dustfall	Metals
MB	Barium (Ba)-Total	1465519	WG3524467-5	<0.0000013		mg/dm2.day	-	<0.0000013	mg/dm2.day		✓	Dustfall	Metals
MB	Barium (Ba)-Total	1465520	WG3524471-1	0.0000054		mg/dm2.day	-	<0.0000013	mg/dm2.day	MB-LOR	×	Dustfall	Metals
MB	Barium (Ba)-Total	1467169	WG3526704-1	<0.0000013		mg/dm2.day	-	<0.0000013	mg/dm2.day		✓	Dustfall	Metals
MB	Beryllium (Be)-Total	1465519	WG3524467-5	<0.000013		mg/dm2.day	-	<0.000013	mg/dm2.day		✓	Dustfall	Metals
MB	Beryllium (Be)-Total	1465520	WG3524471-1	<0.000013		mg/dm2.day	-	<0.000013	mg/dm2.day		✓	Dustfall	Metals
MB	Beryllium (Be)-Total	1467169	WG3526704-1	<0.000013		mg/dm2.day	-	<0.000013	mg/dm2.day		✓	Dustfall	Metals
MB	Bismuth (Bi)-Total	1465519	WG3524467-5	<0.000013		mg/dm2.day	-	<0.000013	mg/dm2.day		✓	Dustfall	Metals
MB	Bismuth (Bi)-Total	1465520	WG3524471-1	<0.000013		mg/dm2.day	-	<0.000013	mg/dm2.day		✓	Dustfall	Metals
MB	Bismuth (Bi)-Total	1467169	WG3526704-1	<0.000013		mg/dm2.day	-	<0.000013	mg/dm2.day		✓	Dustfall	Metals
MB	Boron (B)-Total	1465519	WG3524467-5	<0.00026		mg/dm2.day	-	<0.00026	mg/dm2.day		✓	Dustfall	Metals
MB	Boron (B)-Total	1465520	WG3524471-1	<0.00026		mg/dm2.day	-	<0.00026	mg/dm2.day		✓	Dustfall	Metals
MB	Boron (B)-Total	1467169	WG3526704-1	<0.00026		mg/dm2.day	-	<0.00026	mg/dm2.day		✓	Dustfall	Metals
MB	Cadmium (Cd)-Total	1465519	WG3524467-5	<0.0000013		mg/dm2.day	-	<0.0000013	mg/dm2.day		✓	Dustfall	Metals
MB	Cadmium (Cd)-Total	1465520	WG3524471-1	<0.0000013		mg/dm2.day	-	<0.0000013	mg/dm2.day		✓	Dustfall	Metals
MB	Cadmium (Cd)-Total	1467169	WG3526704-1	<0.0000013		mg/dm2.day	-	<0.0000013	mg/dm2.day		✓	Dustfall	Metals
MB	Calcium (Ca)-Total	1465519	WG3524467-5	<0.00052		mg/dm2.day	-	<0.00052	mg/dm2.day		✓	Dustfall	Metals
MB	Calcium (Ca)-Total	1465520	WG3524471-1	0.00071		mg/dm2.day	-	<0.00052	mg/dm2.day	MB-LOR	×	Dustfall	Metals
MB	Calcium (Ca)-Total	1467169	WG3526704-1	<0.00052		mg/dm2.day	-	<0.00052	mg/dm2.day		✓	Dustfall	Metals
MB	Chromium (Cr)-Total	1465519	WG3524467-5	<0.000013		mg/dm2.day	-	<0.000013	mg/dm2.day		✓	Dustfall	Metals
MB	Chromium (Cr)-Total	1465520	WG3524471-1	<0.000013		mg/dm2.day	-	<0.000013	mg/dm2.day		✓	Dustfall	Metals
MB	Chromium (Cr)-Total	1467169	WG3526704-1	<0.000013		mg/dm2.day	-	<0.000013	mg/dm2.day		✓	Dustfall	Metals
MB	Cobalt (Co)-Total	1465519	WG3524467-5	<0.0000026		mg/dm2.day	-	<0.0000026	mg/dm2.day		✓	Dustfall	Metals
MB	Cobalt (Co)-Total	1465520	WG3524471-1	<0.0000026		mg/dm2.day	-	<0.0000026	mg/dm2.day		✓	Dustfall	Metals
MB	Cobalt (Co)-Total	1467169	WG3526704-1	<0.0000026		mg/dm2.day	-	<0.0000026	mg/dm2.day		✓	Dustfall	Metals
MB	Copper (Cu)-Total	1465519	WG3524467-5	<0.000013		mg/dm2.day	-	<0.000013	mg/dm2.day		✓	Dustfall	Metals
MB	Copper (Cu)-Total	1465520	WG3524471-1	0.000072		mg/dm2.day	-	<0.000013	mg/dm2.day	MB-LOR	×	Dustfall	Metals
MB	Copper (Cu)-Total	1467169	WG3526704-1	<0.000013		mg/dm2.day	-	<0.000013	mg/dm2.day		✓	Dustfall	Metals
MB	Iron (Fe)-Total	1465519	WG3524467-5	0.00119		mg/dm2.day	-	<0.00079	mg/dm2.day	MB-LOR	×	Dustfall	Metals
MB	Iron (Fe)-Total	1465520	WG3524471-1	<0.00079		mg/dm2.day	-	<0.00079	mg/dm2.day		✓	Dustfall	Metals
MB	Iron (Fe)-Total	1467169	WG3526704-1	<0.00079		mg/dm2.day	-	<0.00079	mg/dm2.day		✓	Dustfall	Metals
MB	Lead (Pb)-Total	1465519	WG3524467-5	0.0000014		mg/dm2.day	-	<0.0000013	mg/dm2.day	MB-LOR	×	Dustfall	Metals
MB	Lead (Pb)-Total	1465520	WG3524471-1	0.0000044		mg/dm2.day	-	<0.0000013	mg/dm2.day	MB-LOR	×	Dustfall	Metals
MB	Lead (Pb)-Total	1467169	WG3526704-1	<0.0000013		mg/dm2.day	-	<0.0000013	mg/dm2.day		✓	Dustfall	Metals
MB	Lithium (Li)-Total	1465519	WG3524467-5	<0.00013		mg/dm2.day	-	<0.00013	mg/dm2.day		✓	Dustfall	Metals
MB	Lithium (Li)-Total	1465520	WG3524471-1	<0.00013		mg/dm2.day	-	<0.00013	mg/dm2.day		✓	Dustfall	Metals
MB	Lithium (Li)-Total	1467169	WG3526704-1	<0.00013		mg/dm2.day	-	<0.00013	mg/dm2.day		✓	Dustfall	Metals
MB	Magnesium (Mg)-Total	1465519	WG3524467-5	<0.00013		mg/dm2.day	-	<0.00013	mg/dm2.day		✓	Dustfall	Metals
MB	Magnesium (Mg)-Total	1465520	WG3524471-1	0.00024		mg/dm2.day	-	<0.00013	mg/dm2.day	MB-LOR	×	Dustfall	Metals
MB	Magnesium (Mg)-Total	1467169	WG3526704-1	<0.00013		mg/dm2.day	-	<0.00013	mg/dm2.day		✓	Dustfall	Metals
MB	Manganese (Mn)-Total	1465519	WG3524467-5	<0.0000026		mg/dm2.day	-	<0.0000026	mg/dm2.day		✓	Dustfall	Metals
MB	Manganese (Mn)-Total	1465520	WG3524471-1	0.0000054		mg/dm2.day	-	<0.0000026	mg/dm2.day	MB-LOR	×	Dustfall	Metals
MB	Manganese (Mn)-Total	1467169	WG3526704-1	<0.0000026		mg/dm2.day	-	<0.0000026	mg/dm2.day		✓	Dustfall	Metals
MB	Molybdenum (Mo)-Total	1465519	WG3524467-5	<0.0000013		mg/dm2.day	-	<0.0000013	mg/dm2.day		✓	Dustfall	Metals
MB	Molybdenum (Mo)-Total	1465520	WG3524471-1	0.0000163		mg/dm2.day	-	<0.0000013	mg/dm2.day	MB-LOR	×	Dustfall	Metals
MB	Molybdenum (Mo)-Total	1467169	WG3526704-1	<0.0000013		mg/dm2.day	-	<0.0000013	mg/dm2.day		✓	Dustfall	Metals
MB	Nickel (Ni)-Total	1465519	WG3524467-5	<0.000013		mg/dm2.day	-	<0.000013	mg/dm2.day		✓	Dustfall	Metals
MB	Nickel (Ni)-Total	1465520	WG3524471-1	<0.000013		mg/dm2.day	-	<0.000013	mg/dm2.day		✓	Dustfall	Metals
MB	Nickel (Ni)-Total	1467169	WG3526704-1	<0.000013		mg/dm2.day	-	<0.000013	mg/dm2.day		✓	Dustfall	Metals
MB	Phosphorus (P)-Total	1465519	WG3524467-5	0.0017		mg/dm2.day	-	<0.0013	mg/dm2.day	MB-LOR	×	Dustfall	Metals
MB	Phosphorus (P)-Total	1465520	WG3524471-1	0.0028		mg/dm2.day	-	<0.0013	mg/dm2.day	MB-LOR	×	Dustfall	Metals
MB	Phosphorus (P)-Total	1467169	WG3526704-1	0.0027		mg/dm2.day	-	<0.0013	mg/dm2.day	B	×	Dustfall	Metals
MB	Potassium (K)-Total	1465519	WG3524467-5	<0.0013		mg/dm2.day	-	<0.0013	mg/dm2.day		✓	Dustfall	Metals
MB	Potassium (K)-Total	1465520	WG3524471-1	<0.0013		mg/dm2.day	-	<0.0013	mg/dm2.day		✓	Dustfall	Metals
MB	Potassium (K)-Total	1467169	WG3526704-1	<0.0013		mg/dm2.day	-	<0.0013	mg/dm2.day		✓	Dustfall	Metals
MB	Selenium (Se)-Total	1465519	WG3524467-5	<0.000026		mg/dm2.day	-	<0.000026	mg/dm2.day		✓	Dustfall	Metals
MB	Selenium (Se)-Total	1465520	WG3524471-1	<0.000026		mg/dm2.day	-	<0.000026	mg/dm2.day		✓	Dustfall	Metals
MB	Selenium (Se)-Total	1467169	WG3526704-1	<0.000026		mg/dm2.day	-	<0.000026	mg/dm2.day		✓	Dustfall	Metals
MB	Silicon (Si)-Total	1465519	WG3524467-5	<0.0013		mg/dm2.day	-	<0.0013	mg/dm2.day		✓	Dustfall	Metals
MB	Silicon (Si)-Total	1465520	WG3524471-1	<0.0013		mg/dm2.day	-	<0.0013	mg/dm2.day		✓	Dustfall	Metals
MB	Silicon (Si)-Total	1467169	WG3526704-1	<0.0013		mg/dm2.day	-	<0.0013	mg/dm2.day		✓	Dustfall	Metals
MB	Silver (Ag)-Total	1465519	WG3524467-5	<0.00000026		mg/dm2.day	-	<0.00000026	mg/dm2.day		✓	Dustfall	Metals
MB	Silver (Ag)-Total	1465520	WG3524471-1	0.00000052		mg/dm2.day	-	<0.00000026	mg/dm2.day	MB-LOR	×	Dustfall	Metals
MB	Silver (Ag)-Total	1467169	WG3526704-1	<0.00000026		mg/dm2.day	-	<0.00000026	mg/dm2.day		✓	Dustfall	Metals
MB	Sodium (Na)-Total	1465519	WG3524467-5	<0.0013		mg/dm2.day	-	<0.0013	mg/dm2.day		✓	Dustfall	Metals
MB	Sodium (Na)-Total	1465520	WG3524471-1	<0.0013		mg/dm2.day	-	<0.0013	mg/dm2.day		✓	Dustfall	Metals
MB	Sodium (Na)-Total	1467169	WG3526704-1	<0.0013		mg/dm2.day	-	<0.0013	mg/dm2.day		✓	Dustfall	Metals
MB	Strontium (Sr)-Total	1465519	WG3524467-5	<0.0000026		mg/dm2.day	-	<0.0000026	mg/dm2.day		✓	Dustfall	Metals

Quality Control L2574300

Job Reference
Report To Sarah Flesher, New Gold Inc. Rainy River Project
Date Received 7-Apr-2021 17:30
Report Date 4-May-2021 15:51
Report Version 1

QC Type	Analyte	QC Lot #	ALS QC ID	Result	Target	Units	%	Limit	Units	Qual	Eval	Matrix	Class
MB	Strontium (Sr)-Total	1465520	WG3524471-1	<0.0000026		mg/dm2.day	-	<0.0000026	mg/dm2.day		✓	Dustfall	Metals
MB	Strontium (Sr)-Total	1467169	WG3526704-1	<0.0000026		mg/dm2.day	-	<0.0000026	mg/dm2.day		✓	Dustfall	Metals
MB	Thallium (Tl)-Total	1465519	WG3524467-5	<0.0000026		mg/dm2.day	-	<0.0000026	mg/dm2.day		✓	Dustfall	Metals
MB	Thallium (Tl)-Total	1465520	WG3524471-1	0.0000040		mg/dm2.day	-	<0.0000026	mg/dm2.day	MB-LOR	×	Dustfall	Metals
MB	Thallium (Tl)-Total	1467169	WG3526704-1	<0.0000026		mg/dm2.day	-	<0.0000026	mg/dm2.day		✓	Dustfall	Metals
MB	Tin (Sn)-Total	1465519	WG3524467-5	<0.0000026		mg/dm2.day	-	<0.0000026	mg/dm2.day		✓	Dustfall	Metals
MB	Tin (Sn)-Total	1465520	WG3524471-1	0.0000068		mg/dm2.day	-	<0.0000026	mg/dm2.day	MB-LOR	×	Dustfall	Metals
MB	Tin (Sn)-Total	1467169	WG3526704-1	<0.0000026		mg/dm2.day	-	<0.0000026	mg/dm2.day		✓	Dustfall	Metals
MB	Titanium (Ti)-Total	1465519	WG3524467-5	<0.00026		mg/dm2.day	-	<0.00026	mg/dm2.day		✓	Dustfall	Metals
MB	Titanium (Ti)-Total	1465520	WG3524471-1	<0.00026		mg/dm2.day	-	<0.00026	mg/dm2.day		✓	Dustfall	Metals
MB	Titanium (Ti)-Total	1467169	WG3526704-1	<0.00026		mg/dm2.day	-	<0.00026	mg/dm2.day		✓	Dustfall	Metals
MB	Uranium (U)-Total	1465519	WG3524467-5	0.00000058		mg/dm2.day	-	<0.00000026	mg/dm2.day	MB-LOR	×	Dustfall	Metals
MB	Uranium (U)-Total	1465520	WG3524471-1	0.00000059		mg/dm2.day	-	<0.00000026	mg/dm2.day	MB-LOR	×	Dustfall	Metals
MB	Uranium (U)-Total	1467169	WG3526704-1	<0.00000026		mg/dm2.day	-	<0.00000026	mg/dm2.day		✓	Dustfall	Metals
MB	Vanadium (V)-Total	1465519	WG3524467-5	<0.000026		mg/dm2.day	-	<0.000026	mg/dm2.day		✓	Dustfall	Metals
MB	Vanadium (V)-Total	1465520	WG3524471-1	<0.000026		mg/dm2.day	-	<0.000026	mg/dm2.day		✓	Dustfall	Metals
MB	Vanadium (V)-Total	1467169	WG3526704-1	<0.000026		mg/dm2.day	-	<0.000026	mg/dm2.day		✓	Dustfall	Metals
MB	Zinc (Zn)-Total	1465519	WG3524467-5	<0.000079		mg/dm2.day	-	<0.000079	mg/dm2.day		✓	Dustfall	Metals
MB	Zinc (Zn)-Total	1465520	WG3524471-1	<0.000079		mg/dm2.day	-	<0.000079	mg/dm2.day		✓	Dustfall	Metals
MB	Zinc (Zn)-Total	1467169	WG3526704-1	<0.000079		mg/dm2.day	-	<0.000079	mg/dm2.day		✓	Dustfall	Metals

Qualifier Legend

B	Method Blank exceeds ALS DQO. Associated sample results which are < Limit of Reporting or > 5 times blank level are considered reliable.
MB-LOR	Method Blank exceeds ALS DQO. Limits of Reporting have been adjusted for samples with positive hits below 5x blank level.

Evaluation Legend

✓	QC Lot met ALS Data Quality Objectives
×	QC Lot did not meet ALS Data Quality Objectives

Methodology L2574300

Job Reference
Report To Sarah Flesher, New Gold Inc. Rainy River Project

Date Received 7-Apr-2021 17:30
Report Date 4-May-2021 15:51
Report Version 1

ALS Test Code	ALS Test Description	Lab Location	Matrix	Method Reference	Methodology Description
Particulates (Dustfall)					
DUSTFALLS-ALL-DM2-VA	Dustfalls-Total, Soluble, Insoluble +FV	Vancouver	Dustfall	BC LAB MANUAL - PARTICULATE	This analysis is carried out using procedures modified from British Columbia Environmental Manual "Particulate." Particulates or "Dustfalls" are determined gravimetrically. Total Insoluble and Soluble Dustfalls are determined by filtering a sample through a 0.45 um membrane filter and drying the filter and filtrate at 104 C, followed by ignition at 550 C. The remaining residue after 550 C represents the fixed portion and the weight lost on ignition represents the volatile portion. The sum of all fixed and volatile portions on both Insoluble and Soluble portions represents Total Dustfalls.
PART-HIVOL-GRAV-BU	Particulate on High Volume Filter	Burlington	Filter	USEPA IO3.1	
PART-M212 F-GRAV-BU	PM via Gravimetric Analysis	Burlington	Filter	EPA QA Guidance Document 2.12	The particulate matter collected onto tare-weighed 47mm Teflon Disc filter media is desiccated then brought to a constant weight on an analytical balance. Results are presented in ug (per filter). An air volume can be included to allow for reporting in ug/m3.
Particulates (Filter)					
DUSTFALLS-ALL-DM2-VA	Dustfalls-Total, Soluble, Insoluble +FV	Vancouver	Dustfall	BC LAB MANUAL - PARTICULATE	This analysis is carried out using procedures modified from British Columbia Environmental Manual "Particulate." Particulates or "Dustfalls" are determined gravimetrically. Total Insoluble and Soluble Dustfalls are determined by filtering a sample through a 0.45 um membrane filter and drying the filter and filtrate at 104 C, followed by ignition at 550 C. The remaining residue after 550 C represents the fixed portion and the weight lost on ignition represents the volatile portion. The sum of all fixed and volatile portions on both Insoluble and Soluble portions represents Total Dustfalls.
PART-HIVOL-GRAV-BU	Particulate on High Volume Filter	Burlington	Filter	USEPA IO3.1	
PART-M212 F-GRAV-BU	PM via Gravimetric Analysis	Burlington	Filter	EPA QA Guidance Document 2.12	The particulate matter collected onto tare-weighed 47mm Teflon Disc filter media is desiccated then brought to a constant weight on an analytical balance. Results are presented in ug (per filter). An air volume can be included to allow for reporting in ug/m3.
Metals (Dustfall)					
MET-DUST(DM2)-MS-VA	Total Metals in Dustfalls by ICPMS	Vancouver	Dustfall	EPA 6020A	This analysis is carried out using procedures adapted from "Standard Methods for the Examination of Water and Wastewater" published by the American Public Health Association, and with procedures adapted from "Test Methods for Evaluating Solid Waste" SW-846 published by the United States Environmental Protection Agency (EPA). Instrumental analysis is by inductively coupled plasma - mass spectrometry (EPA Method 6020A).
Total Metals (Filter)					
MET-IO3.5-MS-BU	Metals on High Volume Filter by ICPMS	Burlington	Filter	IO3.5	After weighing (if required), hivol filters are sub-sampled and leached with nitric acid to extract available metal analytes. After dilution, the extracts are submitted to the ICPMS instrument for analysis.

Detection Limits L2574300

Job Reference
Report To Sarah Flesher, New Gold Inc. Rainy River Project
Date Received 7-Apr-2021 17:30
Report Date 4-May-2021 15:51
Report Version 1

Client Sample ID		SOUTH-TSP-351	SOUTH-TSP-352	SOUTH-TSP-353	SOUTH-TSP-354	SOUTH-TSP-355	NORTH-TSP-351	NORTH-TSP-352	NORTH-TSP-353	NORTH-TSP-354	NORTH-TSP-355	NORTHWEST-TSP-351	NORTHWEST-TSP-352	NORTHWEST-TSP-353
Date Sampled		5-Mar-2021	11-Mar-2021	17-Mar-2021	23-Mar-2021	29-Mar-2021	5-Mar-2021	11-Mar-2021	17-Mar-2021	23-Mar-2021	29-Mar-2021	5-Mar-2021	11-Mar-2021	17-Mar-2021
Time Sampled		0:00	0:00	0:00	0:00	0:00	0:00	0:00	0:00	0:00	0:00	0:00	0:00	0:00
ALS Sample ID		L2574300-1	L2574300-2	L2574300-3	L2574300-4	L2574300-5	L2574300-6	L2574300-7	L2574300-8	L2574300-9	L2574300-10	L2574300-11	L2574300-12	L2574300-13
Parameter	Units	Filter	Filter	Filter	Filter	Filter	Filter	Filter	Filter	Filter	Filter	Filter	Filter	Filter
Particulates (Filter)														
Total particulate	ug	2300	2300	2300	2300	2300	2300	2300	2300	2300	2300	2300	2300	2300
Total Metals (Filter)														
Arsenic (As)	ug	3.0	3.0	3.0	3.0	3.0	3.0	3.0	3.0	3.0	3.0	3.0	3.0	3.0
Cadmium (Cd)	ug	2.0	2.0	2.0	2.0	2.0	2.0	2.0	2.0	2.0	2.0	2.0	2.0	2.0
Chromium (Cr)	ug	5.0	5.0	5.0	5.0	5.0	5.0	5.0	5.0	5.0	5.0	5.0	5.0	5.0
Cobalt (Co)	ug	2.0	2.0	2.0	2.0	2.0	2.0	2.0	2.0	2.0	2.0	2.0	2.0	2.0
Copper (Cu)	ug	4.0	4.0	4.0	4.0	4.0	4.0	4.0	4.0	4.0	4.0	4.0	4.0	4.0
Iron (Fe)	ug	20	20	20	20	20	20	20	20	20	20	20	20	20
Lead (Pb)	ug	3.0	3.0	3.0	3.0	3.0	3.0	3.0	3.0	3.0	3.0	3.0	3.0	3.0
Manganese (Mn)	ug	1.0	1.0	1.0	1.0	1.0	1.0	1.0	1.0	1.0	1.0	1.0	1.0	1.0
Nickel (Ni)	ug	3.0	3.0	3.0	3.0	3.0	3.0	3.0	3.0	3.0	3.0	3.0	3.0	3.0
Selenium (Se)	ug	10	10	10	10	10	10	10	10	10	10	10	10	10
Vanadium (V)	ug	5.0	5.0	5.0	5.0	5.0	5.0	5.0	5.0	5.0	5.0	5.0	5.0	5.0
Zinc (Zn)	ug	5.0	5.0	5.0	5.0	5.0	5.0	5.0	5.0	5.0	5.0	5.0	5.0	5.0
Particulates (Dustfall)														
Fixed Dustfall	mg/dm2.day													
Volatile Dustfall	mg/dm2.day													
Total Dustfall	mg/dm2.day													
Fixed Insoluble Dustfall	mg/dm2.day													
Volatile Insoluble Dustfall	mg/dm2.day													
Total Insoluble Dustfall	mg/dm2.day													
Fixed Soluble Dustfall	mg/dm2.day													
Volatile Soluble Dustfall	mg/dm2.day													
Total Soluble Dustfall	mg/dm2.day													
Metals (Dustfall)														
Aluminum (Al)-Total	mg/dm2.day													
Antimony (Sb)-Total	mg/dm2.day													
Arsenic (As)-Total	mg/dm2.day													
Barium (Ba)-Total	mg/dm2.day													
Beryllium (Be)-Total	mg/dm2.day													
Bismuth (Bi)-Total	mg/dm2.day													
Boron (B)-Total	mg/dm2.day													
Cadmium (Cd)-Total	mg/dm2.day													
Calcium (Ca)-Total	mg/dm2.day													
Chromium (Cr)-Total	mg/dm2.day													
Cobalt (Co)-Total	mg/dm2.day													
Copper (Cu)-Total	mg/dm2.day													
Iron (Fe)-Total	mg/dm2.day													
Lead (Pb)-Total	mg/dm2.day													
Lithium (Li)-Total	mg/dm2.day													
Magnesium (Mg)-Total	mg/dm2.day													
Manganese (Mn)-Total	mg/dm2.day													
Molybdenum (Mo)-Total	mg/dm2.day													
Nickel (Ni)-Total	mg/dm2.day													
Phosphorus (P)-Total	mg/dm2.day													

Detection Limits L2574300

Job Reference
Report To Sarah Flesher, New Golc
Date Received 7-Apr-2021 17:30
Report Date 4-May-2021 15:51
Report Version 1

Client Sample ID		NORTHWEST-TSP-354	NORTHWEST-TSP-355	TSP-TRAVEL BLANK	SOUTH-PM2.5-351	SOUTH-PM2.5-352	SOUTH-PM2.5-353	SOUTH-PM2.5-354	SOUTH-PM2.5-355	NORTH-PM2.5-351	NORTH-PM2.5-352	NORTH-PM2.5-353	NORTH-PM2.5-354
Date Sampled		23-Mar-2021	29-Mar-2021	5-Apr-2021	5-Mar-2021	11-Mar-2021	17-Mar-2021	23-Mar-2021	29-Mar-2021	5-Mar-2021	11-Mar-2021	17-Mar-2021	23-Mar-2021
Time Sampled		0:00	0:00	0:00	0:00	0:00	0:00	0:00	0:00	0:00	0:00	0:00	0:00
ALS Sample ID		L2574300-14	L2574300-15	L2574300-16	L2574300-17	L2574300-18	L2574300-19	L2574300-20	L2574300-21	L2574300-22	L2574300-23	L2574300-24	L2574300-25
Parameter	Units	Filter	Filter	Filter	Filter	Filter	Filter	Filter	Filter	Filter	Filter	Filter	Filter
Particulates (Filter)													
Total particulate	ug	2300	2300	2300	15	15	15	15	15	15	15	15	15
Total Metals (Filter)													
Arsenic (As)	ug	3.0	3.0	3.0									
Cadmium (Cd)	ug	2.0	2.0	2.0									
Chromium (Cr)	ug	5.0	5.0	5.0									
Cobalt (Co)	ug	2.0	2.0	2.0									
Copper (Cu)	ug	4.0	4.0	4.0									
Iron (Fe)	ug	20	20	20									
Lead (Pb)	ug	3.0	3.0	3.0									
Manganese (Mn)	ug	1.0	1.0	1.0									
Nickel (Ni)	ug	3.0	3.0	3.0									
Selenium (Se)	ug	10	10	10									
Vanadium (V)	ug	5.0	5.0	5.0									
Zinc (Zn)	ug	5.0	5.0	5.0									
Particulates (Dustfall)													
Fixed Dustfall	mg/dm2.day												
Volatile Dustfall	mg/dm2.day												
Total Dustfall	mg/dm2.day												
Fixed Insoluble Dustfall	mg/dm2.day												
Volatile Insoluble Dustfall	mg/dm2.day												
Total Insoluble Dustfall	mg/dm2.day												
Fixed Soluble Dustfall	mg/dm2.day												
Volatile Soluble Dustfall	mg/dm2.day												
Total Soluble Dustfall	mg/dm2.day												
Metals (Dustfall)													
Aluminum (Al)-Total	mg/dm2.day												
Antimony (Sb)-Total	mg/dm2.day												
Arsenic (As)-Total	mg/dm2.day												
Barium (Ba)-Total	mg/dm2.day												
Beryllium (Be)-Total	mg/dm2.day												
Bismuth (Bi)-Total	mg/dm2.day												
Boron (B)-Total	mg/dm2.day												
Cadmium (Cd)-Total	mg/dm2.day												
Calcium (Ca)-Total	mg/dm2.day												
Chromium (Cr)-Total	mg/dm2.day												
Cobalt (Co)-Total	mg/dm2.day												
Copper (Cu)-Total	mg/dm2.day												
Iron (Fe)-Total	mg/dm2.day												
Lead (Pb)-Total	mg/dm2.day												
Lithium (Li)-Total	mg/dm2.day												
Magnesium (Mg)-Total	mg/dm2.day												
Manganese (Mn)-Total	mg/dm2.day												
Molybdenum (Mo)-Total	mg/dm2.day												
Nickel (Ni)-Total	mg/dm2.day												
Phosphorus (P)-Total	mg/dm2.day												

Detection Limits L2574300

Job Reference
Report To Sarah Flesher, New Golc
Date Received 7-Apr-2021 17:30
Report Date 4-May-2021 15:51
Report Version 1

Client Sample ID		NORTH-PM2.5-355	NORTHWEST-PM2.5-351	NORTHWEST-PM2.5-352	NORTHWEST-PM2.5-353	NORTHWEST-PM2.5-354	NORTHWEST-PM2.5-355	PM2.5-TRAVEL BLANK	NOP1-DUSTFALL-3	CP1-DUSTFALL-3	WCP1-DUSTFALL-3	GH1-DUSTFALL-3	SPP1-DUSTFALL-13	SPP1-DUSTFALL-14
Date Sampled		29-Mar-2021	5-Mar-2021	11-Mar-2021	17-Mar-2021	23-Mar-2021	29-Mar-2021	5-Apr-2021	31-Mar-2021	31-Mar-2021	26-Mar-2021	31-Mar-2021	10-Mar-2021	17-Mar-2021
Time Sampled		0:00	0:00	0:00	0:00	0:00	0:00	0:00	0:00	0:00	0:00	0:00	0:00	0:00
ALS Sample ID		L2574300-26	L2574300-27	L2574300-28	L2574300-29	L2574300-30	L2574300-31	L2574300-32	L2574300-33	L2574300-34	L2574300-35	L2574300-36	L2574300-37	L2574300-38
Parameter	Units	Filter	Filter	Filter	Filter	Filter	Filter	Filter	Dustfall	Dustfall	Dustfall	Dustfall	Dustfall	Dustfall
Particulates (Filter)														
Total particulate	ug	15	15	15	15	15	15	15						
Total Metals (Filter)														
Arsenic (As)	ug													
Cadmium (Cd)	ug													
Chromium (Cr)	ug													
Cobalt (Co)	ug													
Copper (Cu)	ug													
Iron (Fe)	ug													
Lead (Pb)	ug													
Manganese (Mn)	ug													
Nickel (Ni)	ug													
Selenium (Se)	ug													
Vanadium (V)	ug													
Zinc (Zn)	ug													
Particulates (Dustfall)														
Fixed Dustfall	mg/dm2.day								0.10	0.10	0.13	0.10	0.43	0.43
Volatile Dustfall	mg/dm2.day								0.10	0.10	0.13	0.10	0.43	0.43
Total Dustfall	mg/dm2.day								0.10	0.10	0.13	0.10	0.43	0.43
Fixed Insoluble Dustfall	mg/dm2.day								0.10	0.10	0.13	0.10	0.43	0.43
Volatile Insoluble Dustfall	mg/dm2.day								0.10	0.10	0.13	0.10	0.43	0.43
Total Insoluble Dustfall	mg/dm2.day								0.10	0.10	0.13	0.10	0.43	0.43
Fixed Soluble Dustfall	mg/dm2.day								0.10	0.10	0.13	0.10	0.43	0.43
Volatile Soluble Dustfall	mg/dm2.day								0.10	0.10	0.13	0.10	0.43	0.43
Total Soluble Dustfall	mg/dm2.day								0.10	0.10	0.13	0.10	0.43	0.43
Metals (Dustfall)														
Aluminum (Al)-Total	mg/dm2.day								0.000041	0.000041	0.000050	0.000041	0.00017	0.00017
Antimony (Sb)-Total	mg/dm2.day								0.0000068	0.0000027	0.0000033	0.0000027	0.000028	0.000011
Arsenic (As)-Total	mg/dm2.day								0.000027	0.0000041	0.000017	0.000021	0.000034	0.000057
Barium (Ba)-Total	mg/dm2.day								0.00000068	0.00000068	0.00000083	0.00000068	0.0000028	0.0000028
Beryllium (Be)-Total	mg/dm2.day								0.0000068	0.0000068	0.0000083	0.0000068	0.000028	0.000028
Bismuth (Bi)-Total	mg/dm2.day								0.0000068	0.0000068	0.0000083	0.0000068	0.000028	0.000028
Boron (B)-Total	mg/dm2.day								0.00014	0.00014	0.00017	0.00014	0.00057	0.00057
Cadmium (Cd)-Total	mg/dm2.day								0.00000068	0.00000068	0.00000083	0.00000068	0.0000028	0.0000028
Calcium (Ca)-Total	mg/dm2.day								0.00027	0.00027	0.00033	0.00027	0.0011	0.0011
Chromium (Cr)-Total	mg/dm2.day								0.0000068	0.0000068	0.0000083	0.0000068	0.000028	0.000028
Cobalt (Co)-Total	mg/dm2.day								0.0000014	0.0000014	0.0000017	0.0000014	0.0000057	0.0000057
Copper (Cu)-Total	mg/dm2.day								0.0000068	0.0000068	0.0000083	0.0000068	0.000028	0.000028
Iron (Fe)-Total	mg/dm2.day								0.00041	0.00041	0.00050	0.00041	0.0017	0.0017
Lead (Pb)-Total	mg/dm2.day								0.00000068	0.00000068	0.00000083	0.00000068	0.0000028	0.0000028
Lithium (Li)-Total	mg/dm2.day								0.000068	0.000068	0.000083	0.000068	0.00028	0.00028
Magnesium (Mg)-Total	mg/dm2.day								0.000068	0.000068	0.000083	0.000068	0.00028	0.00028
Manganese (Mn)-Total	mg/dm2.day								0.0000014	0.0000014	0.0000017	0.0000014	0.0000057	0.0000057
Molybdenum (Mo)-Total	mg/dm2.day								0.00000068	0.00000068	0.00000083	0.00000068	0.0000028	0.0000028
Nickel (Ni)-Total	mg/dm2.day								0.0000068	0.0000068	0.0000083	0.0000068	0.000028	0.000028
Phosphorus (P)-Total	mg/dm2.day								0.00068	0.00068	0.00083	0.0014	0.0028	0.0028

Detection Limits L2574300

Job Reference
Report To Sarah Flesher, New Golc
Date Received 7-Apr-2021 17:30
Report Date 4-May-2021 15:51
Report Version 1

Client Sample ID		SPP1-DUSTFALL-15	SPP1-DUSTFALL-16	DUSTFALL-GALLINGER ROAD	DUSTFALL-TAIT ROAD (SOUTH)	DUSTFALL-NORTHWEST
Date Sampled		24-Mar-2021	31-Mar-2021	31-Mar-2021	31-Mar-2021	31-Mar-2021
Time Sampled		0:00	0:00	0:00	0:00	0:00
ALS Sample ID		L2574300-39	L2574300-40	L2574300-41	L2574300-42	L2574300-43
Parameter	Units	Dustfall	Dustfall	Dustfall	Dustfall	Dustfall
Particulates (Filter)						
Total particulate	ug					
Total Metals (Filter)						
Arsenic (As)	ug					
Cadmium (Cd)	ug					
Chromium (Cr)	ug					
Cobalt (Co)	ug					
Copper (Cu)	ug					
Iron (Fe)	ug					
Lead (Pb)	ug					
Manganese (Mn)	ug					
Nickel (Ni)	ug					
Selenium (Se)	ug					
Vanadium (V)	ug					
Zinc (Zn)	ug					
Particulates (Dustfall)						
Fixed Dustfall	mg/dm2.day	0.10	0.43	0.10	0.10	0.10
Volatile Dustfall	mg/dm2.day	0.10	0.43	0.10	0.10	0.10
Total Dustfall	mg/dm2.day	0.10	0.43	0.10	0.10	0.10
Fixed Insoluble Dustfall	mg/dm2.day	0.10	0.43	0.10	0.10	0.10
Volatile Insoluble Dustfall	mg/dm2.day	0.10	0.43	0.10	0.10	0.10
Total Insoluble Dustfall	mg/dm2.day	0.10	0.43	0.10	0.10	0.10
Fixed Soluble Dustfall	mg/dm2.day	0.10	0.43	0.10	0.10	0.10
Volatile Soluble Dustfall	mg/dm2.day	0.10	0.43	0.10	0.10	0.10
Total Soluble Dustfall	mg/dm2.day	0.10	0.43	0.10	0.10	0.10
Metals (Dustfall)						
Aluminum (Al)-Total	mg/dm2.day	0.00017	0.00018	0.000036	0.000036	0.000041
Antimony (Sb)-Total	mg/dm2.day	0.000028	0.000012	0.0000024	0.0000024	0.0000027
Arsenic (As)-Total	mg/dm2.day	0.000051	0.000047	0.0000036	0.0000072	0.0000041
Barium (Ba)-Total	mg/dm2.day	0.0000028	0.0000030	0.00000060	0.00000060	0.00000068
Beryllium (Be)-Total	mg/dm2.day	0.000028	0.000030	0.0000060	0.0000060	0.0000068
Bismuth (Bi)-Total	mg/dm2.day	0.000028	0.000030	0.0000060	0.0000060	0.0000068
Boron (B)-Total	mg/dm2.day	0.00057	0.00059	0.00012	0.00012	0.00014
Cadmium (Cd)-Total	mg/dm2.day	0.0000028	0.0000030	0.00000060	0.00000060	0.00000068
Calcium (Ca)-Total	mg/dm2.day	0.0011	0.0012	0.00024	0.00024	0.00027
Chromium (Cr)-Total	mg/dm2.day	0.000028	0.000030	0.0000060	0.0000060	0.0000068
Cobalt (Co)-Total	mg/dm2.day	0.0000057	0.0000059	0.0000012	0.0000012	0.0000014
Copper (Cu)-Total	mg/dm2.day	0.000028	0.00015	0.0000060	0.0000060	0.0000068
Iron (Fe)-Total	mg/dm2.day	0.0017	0.0018	0.00036	0.00036	0.00041
Lead (Pb)-Total	mg/dm2.day	0.0000028	0.0000030	0.00000060	0.00000060	0.00000068
Lithium (Li)-Total	mg/dm2.day	0.00028	0.00030	0.000060	0.000060	0.000068
Magnesium (Mg)-Total	mg/dm2.day	0.00028	0.00030	0.000060	0.000060	0.000068
Manganese (Mn)-Total	mg/dm2.day	0.0000057	0.0000059	0.0000012	0.0000012	0.0000014
Molybdenum (Mo)-Total	mg/dm2.day	0.0000028	0.0000059	0.00000060	0.00000060	0.00000068
Nickel (Ni)-Total	mg/dm2.day	0.000028	0.000030	0.0000060	0.0000060	0.0000068
Phosphorus (P)-Total	mg/dm2.day	0.0028	0.0030	0.00060	0.0012	0.00068

Detection Limits L2574300

Job Reference
Report To Sarah Flesher, New Gold Inc. Rainy River Project
Date Received 7-Apr-2021 17:30
Report Date 4-May-2021 15:51
Report Version 1

Client Sample ID		SOUTH-TSP-351	SOUTH-TSP-352	SOUTH-TSP-353	SOUTH-TSP-354	SOUTH-TSP-355	NORTH-TSP-351	NORTH-TSP-352	NORTH-TSP-353	NORTH-TSP-354	NORTH-TSP-355	NORTHWEST-TSP-351	NORTHWEST-TSP-352	NORTHWEST-TSP-353
Date Sampled		5-Mar-2021	11-Mar-2021	17-Mar-2021	23-Mar-2021	29-Mar-2021	5-Mar-2021	11-Mar-2021	17-Mar-2021	23-Mar-2021	29-Mar-2021	5-Mar-2021	11-Mar-2021	17-Mar-2021
Time Sampled		0:00	0:00	0:00	0:00	0:00	0:00	0:00	0:00	0:00	0:00	0:00	0:00	0:00
ALS Sample ID		L2574300-1	L2574300-2	L2574300-3	L2574300-4	L2574300-5	L2574300-6	L2574300-7	L2574300-8	L2574300-9	L2574300-10	L2574300-11	L2574300-12	L2574300-13
Parameter	Units	Filter	Filter	Filter	Filter	Filter	Filter	Filter	Filter	Filter	Filter	Filter	Filter	Filter
Potassium (K)-Total	mg/dm2.day													
Selenium (Se)-Total	mg/dm2.day													
Silicon (Si)-Total	mg/dm2.day													
Silver (Ag)-Total	mg/dm2.day													
Sodium (Na)-Total	mg/dm2.day													
Strontium (Sr)-Total	mg/dm2.day													
Thallium (Tl)-Total	mg/dm2.day													
Tin (Sn)-Total	mg/dm2.day													
Titanium (Ti)-Total	mg/dm2.day													
Uranium (U)-Total	mg/dm2.day													
Vanadium (V)-Total	mg/dm2.day													
Zinc (Zn)-Total	mg/dm2.day													

Detection Limits L2574300

Job Reference
Report To Sarah Flesher, New Golc
Date Received 7-Apr-2021 17:30
Report Date 4-May-2021 15:51
Report Version 1

Client Sample ID		NORTHWEST-TSP-354	NORTHWEST-TSP-355	TSP-TRAVEL BLANK	SOUTH-PM2.5-351	SOUTH-PM2.5-352	SOUTH-PM2.5-353	SOUTH-PM2.5-354	SOUTH-PM2.5-355	NORTH-PM2.5-351	NORTH-PM2.5-352	NORTH-PM2.5-353	NORTH-PM2.5-354
Date Sampled		23-Mar-2021	29-Mar-2021	5-Apr-2021	5-Mar-2021	11-Mar-2021	17-Mar-2021	23-Mar-2021	29-Mar-2021	5-Mar-2021	11-Mar-2021	17-Mar-2021	23-Mar-2021
Time Sampled		0:00	0:00	0:00	0:00	0:00	0:00	0:00	0:00	0:00	0:00	0:00	0:00
ALS Sample ID		L2574300-14	L2574300-15	L2574300-16	L2574300-17	L2574300-18	L2574300-19	L2574300-20	L2574300-21	L2574300-22	L2574300-23	L2574300-24	L2574300-25
Parameter	Units	Filter	Filter	Filter	Filter	Filter	Filter	Filter	Filter	Filter	Filter	Filter	Filter
Potassium (K)-Total	mg/dm2.day												
Selenium (Se)-Total	mg/dm2.day												
Silicon (Si)-Total	mg/dm2.day												
Silver (Ag)-Total	mg/dm2.day												
Sodium (Na)-Total	mg/dm2.day												
Strontium (Sr)-Total	mg/dm2.day												
Thallium (Tl)-Total	mg/dm2.day												
Tin (Sn)-Total	mg/dm2.day												
Titanium (Ti)-Total	mg/dm2.day												
Uranium (U)-Total	mg/dm2.day												
Vanadium (V)-Total	mg/dm2.day												
Zinc (Zn)-Total	mg/dm2.day												

Detection Limits L2574300

Job Reference
Report To Sarah Flesher, New Golc
Date Received 7-Apr-2021 17:30
Report Date 4-May-2021 15:51
Report Version 1

Client Sample ID		NORTH-PM2.5-355	NORTHWEST-PM2.5-351	NORTHWEST-PM2.5-352	NORTHWEST-PM2.5-353	NORTHWEST-PM2.5-354	NORTHWEST-PM2.5-355	PM2.5-TRAVEL BLANK	NOP1-DUSTFALL-3	CP1-DUSTFALL-3	WCP1-DUSTFALL-3	GH1-DUSTFALL-3	SPP1-DUSTFALL-13	SPP1-DUSTFALL-14
Date Sampled		29-Mar-2021	5-Mar-2021	11-Mar-2021	17-Mar-2021	23-Mar-2021	29-Mar-2021	5-Apr-2021	31-Mar-2021	31-Mar-2021	26-Mar-2021	31-Mar-2021	10-Mar-2021	17-Mar-2021
Time Sampled		0:00	0:00	0:00	0:00	0:00	0:00	0:00	0:00	0:00	0:00	0:00	0:00	0:00
ALS Sample ID		L2574300-26	L2574300-27	L2574300-28	L2574300-29	L2574300-30	L2574300-31	L2574300-32	L2574300-33	L2574300-34	L2574300-35	L2574300-36	L2574300-37	L2574300-38
Parameter	Units	Filter	Filter	Filter	Filter	Filter	Filter	Filter	Dustfall	Dustfall	Dustfall	Dustfall	Dustfall	Dustfall
Potassium (K)-Total	mg/dm2.day								0.00068	0.00068	0.00083	0.00068	0.0028	0.0028
Selenium (Se)-Total	mg/dm2.day								0.000014	0.000014	0.000017	0.000014	0.000057	0.000057
Silicon (Si)-Total	mg/dm2.day								0.00068	0.018	0.00083	0.00068	0.0028	0.048
Silver (Ag)-Total	mg/dm2.day								0.00000014	0.00000014	0.00000017	0.00000014	0.00000057	0.00000057
Sodium (Na)-Total	mg/dm2.day								0.00068	0.00068	0.00083	0.00068	0.0028	0.0028
Strontium (Sr)-Total	mg/dm2.day								0.0000014	0.0000014	0.0000017	0.0000014	0.0000057	0.0000057
Thallium (Tl)-Total	mg/dm2.day								0.0000014	0.0000014	0.0000017	0.0000014	0.0000057	0.0000057
Tin (Sn)-Total	mg/dm2.day								0.0000014	0.0000014	0.0000017	0.0000014	0.0000057	0.0000057
Titanium (Ti)-Total	mg/dm2.day								0.00014	0.00014	0.00017	0.00014	0.00057	0.00057
Uranium (U)-Total	mg/dm2.day								0.0000012	0.00000068	0.00000083	0.0000014	0.0000023	0.0000023
Vanadium (V)-Total	mg/dm2.day								0.000014	0.000014	0.000017	0.000014	0.000057	0.000057
Zinc (Zn)-Total	mg/dm2.day								0.000041	0.000041	0.000050	0.000041	0.00017	0.00017

Detection Limits L2574300

Job Reference
Report To Sarah Flesher, New Golc
Date Received 7-Apr-2021 17:30
Report Date 4-May-2021 15:51
Report Version 1

Client Sample ID		SPP1-DUSTFALL-15	SPP1-DUSTFALL-16	DUSTFALL-GALLINGER ROAD	DUSTFALL-TAIT ROAD (SOUTH)	DUSTFALL-NORTHWEST
Date Sampled		24-Mar-2021	31-Mar-2021	31-Mar-2021	31-Mar-2021	31-Mar-2021
Time Sampled		0:00	0:00	0:00	0:00	0:00
ALS Sample ID		L2574300-39	L2574300-40	L2574300-41	L2574300-42	L2574300-43
Parameter	Units	Dustfall	Dustfall	Dustfall	Dustfall	Dustfall
Potassium (K)-Total	mg/dm2.day	0.0028	0.0030	0.00060	0.00060	0.00068
Selenium (Se)-Total	mg/dm2.day	0.000057	0.000059	0.000012	0.000012	0.000014
Silicon (Si)-Total	mg/dm2.day	0.0028	0.0030	0.019	0.00060	0.00068
Silver (Ag)-Total	mg/dm2.day	0.00000057	0.00000059	0.00000012	0.00000012	0.00000014
Sodium (Na)-Total	mg/dm2.day	0.0028	0.0030	0.00060	0.00060	0.00068
Strontium (Sr)-Total	mg/dm2.day	0.0000057	0.0000059	0.0000012	0.0000012	0.0000014
Thallium (Tl)-Total	mg/dm2.day	0.0000057	0.0000059	0.0000012	0.0000012	0.0000014
Tin (Sn)-Total	mg/dm2.day	0.0000057	0.0000059	0.0000012	0.0000012	0.0000014
Titanium (Ti)-Total	mg/dm2.day	0.00057	0.00059	0.00012	0.00036	0.00014
Uranium (U)-Total	mg/dm2.day	0.00000057	0.0000030	0.00000095	0.0000011	0.0000011
Vanadium (V)-Total	mg/dm2.day	0.000057	0.000059	0.000012	0.000012	0.000014
Zinc (Zn)-Total	mg/dm2.day	0.00017	0.00018	0.000036	0.000036	0.000041

ALS Environmental

BV Labs Job Number: C108243
Report Date: 2021/02/17

Client Project #: TC111504.2015.6
Site Location: NEW GOLD - EMO, ON
Your P.O. #: 4500022601
Sampler Initials: SF

RESULTS OF CHEMICAL ANALYSES OF AIR

BV Labs ID		ZH2836	ZH2837		
Sampling Date		2020-12-31	2020-12-31		
	UNITS	**RRP SOUTH**	**RRP NORTH**	**RDL**	**QC Batch**
Passive Monitoring					
Calculated NO2	ppb	2.0	1.5	0.1	A153034
Calculated SO2	ppb	0.2	0.2	0.1	A155495

RDL = Reportable Detection Limit

Results relate only to the items tested.

GENERAL COMMENTS

Results relate only to the items tested.

Report Date: 2021/02/17

ALS Environmental
Attention: Claire Kocharakkal
Client Project #: TC111504.2015.6
Your P.O. #:4500022601
Site Location: NEW GOLD - EMO, ON

Quality Assurance Report
BV Labs Job Number: C108243

QA/QC Ba	Init	QC Type	Parameter	Date Anal	Value	Recovery	UNITS	QC Limits
A153034	YL6	Spiked Blank	Calculated NO2	2021-02-11		98	%	90 - 110
A153034	YL6	Method Blank	Calculated NO2	2021-02-11	<0.1		ppb	
A155495	OZ	Spiked Blank	Calculated SO2			100	%	90 - 110
A155495	OZ	Method Blank	Calculated SO2		<0.1		ppb	

Spiked Blank: A blank matrix sample to which a known amount of the analyte, usually from a second source, has been added. Used to evaluate method accuracy.
Method Blank: A blank matrix containing all reagents used in the analytical procedure. Used to identify laboratory contamination.

ALS Environmental

BV Labs Job Number: C115762
Report Date: 2021/03/22

Client Project #: TC111504.2015.6
Site Location: NEW GOLD - EMO, ON
Your P.O. #: 4500022601
Sampler Initials: SF

RESULTS OF CHEMICAL ANALYSES OF AIR

BV Labs ID		ZL7078	ZL7079		
Sampling Date		2021-02-02	2021-02-02		
	UNITS	**RRP SOUTH**	**RRP NORTH**	**RDL**	**QC Batch**
Passive Monitoring					
Calculated NO2	ppb	0.3	0.4	0.1	A180430
Calculated SO2	ppb	0.2	0.2	0.1	A180228

RDL = Reportable Detection Limit

Results relate only to the items tested.

GENERAL COMMENTS

Results relate only to the items tested.

Report Date: 2021/03/22

ALS Environmental
Attention: Claire Kocharakkal
Client Project #: TC111504.2015.6
Your P.O. #:4500022601
Site Location: NEW GOLD - EMO, ON

Quality Assurance Report
BV Labs Job Number: C115762

QA/QC Ba	Init	QC Type	Parameter	Date Anal	Value	Recovery	UNITS	QC Limits
A180228	OZ	Spiked Blank	Calculated SO2			97	%	90 - 110
A180228	OZ	Method Blank	Calculated SO2		<0.1		ppb	
A180430	YL6	Spiked Blank	Calculated NO2			100	%	90 - 110
A180430	YL6	Method Blank	Calculated NO2		<0.1		ppb	

Spiked Blank: A blank matrix sample to which a known amount of the analyte, usually from a second source, has been added. Used to evaluate method accuracy.
Method Blank: A blank matrix containing all reagents used in the analytical procedure. Used to identify laboratory contamination.

ALS Environmental

BV Labs Job Number: C122373
Report Date: 2021/04/16

Client Project #: TC111504.2015.6
Site Location: NEW GOLD - EMO, ON
Your P.O. #: 4500022601
Sampler Initials: SF

RESULTS OF CHEMICAL ANALYSES OF AIR

BV Labs ID		ZO9968	ZO9969		
Sampling Date		2021-03-02	2021-03-02		
	UNITS	**RRP SOUTH**	**RRP NORTH**	**RDL**	**QC Batch**
Passive Monitoring					
Calculated NO2	ppb	0.5	0.3	0.1	A198052
Calculated SO2	ppb	0.2	0.4	0.1	A198482

RDL = Reportable Detection Limit

Results relate only to the items tested.

GENERAL COMMENTS

Sample ZO9969 [RRP NORTH] : Sample end date listed on COC as 2021/03/02.

End date of 2021/03/31 used in calculation of final results.

Results relate only to the items tested.

Report Date: 2021/04/16

ALS Environmental
Attention: Claire Kocharakkal
Client Project #: TC111504.2015.6
Your P.O. #:4500022601
Site Location: NEW GOLD - EMO, ON

Quality Assurance Report
BV Labs Job Number: C122373

QA/QC Ba	Init	QC Type	Parameter	Date Anal	Value	Recovery	UNITS	QC Limits
A198052	YL6	Spiked Blank	Calculated NO2			99	%	90 - 110
A198052	YL6	Method Blank	Calculated NO2		<0.1		ppb	
A198482	OZ	Spiked Blank	Calculated SO2			102	%	90 - 110
A198482	OZ	Method Blank	Calculated SO2		<0.1		ppb	

Spiked Blank: A blank matrix sample to which a known amount of the analyte, usually from a second source, has been added. Used to evaluate method accuracy.
Method Blank: A blank matrix containing all reagents used in the analytical procedure. Used to identify laboratory contamination.

APPENDIX D:
HI-VOL & PQ200 SAMPLER CALIBRATION SHEETS

TE-5170 Calibration Worksheet

Site Information

Location:	Cleves, Ohio	**Site ID:**	North	**Date:**	16-Mar-21
Sampler:	E-5170 MFC	**Serial No:**		**Tech:**	S.Flesher

Site Conditions

Barometric Pressure (in Hg):	28.58	**Corrected Pressure (mm Hg):**	726
Temperature (deg F):	28	**Temperature (deg K):**	271
Average Press. (in Hg):	29.65	**Corrected Average (mm Hg):**	753
Average Temp. (deg F):	28	**Average Temp. (deg K):**	271

Calibration Orifice

Make:	Tisch	**Qstd Slope:**	1.67418
Model:	TE-5028A	**Qstd Intercept:**	-0.02696
Serial#:	1179	**Date Certified:**	July 6th 2020

Calibration Information

Plate or Test #	H2O (in)	Qstd (m3/min)	I (chart)	IC (corrected)
1	5.92	1.507	44.0	45.14
2	3.53	1.167	40.0	41.03
3	3.33	1.134	38.0	38.98
4	2.63	1.010	36.0	36.93
5	2.40	0.965	34.0	34.88

Linear Regression

Slope:	17.9850
Intercept:	18.5876
Corr. Coeff:	0.9707
# of Observations:	5

Calculations

Qstd = 1/m[Sqrt(H2O(Pa/Pstd)(Tstd/Ta))-b]

IC = I[Sqrt(Pa/Pstd)(Tstd/Ta)]

Qstd = standard flow rate

IC = corrected chart response

I = actual chart response

m = calibrator Qstd slope

b = calibrator Qstd intercept

Ta = actual temperature during calibration (deg K)

Pa = actual pressure during calibration (mm Hg)

Tstd = 298 deg K

Pstd = 760 mm Hg

For subsequent calculation of sampler flow:

1/m((I)[Sqrt(298/Tav)(Pav/760)]-b)

m = sampler slope

b = sampler intercept

I = chart response

Tav = daily average temperature

Pav = daily average pressure

Average I (chart): 44.0

Average Flow Calculation m3/min

1.522661949

Average Flow Calculation in CFM

53.76519343

Sample Time (Hrs): 24.0

Total Flow in m3/min

2192.633207

Total Flow in CFM

77421.87854

NOTE: Ensure calibration orifice has been certified within 12 months of use

TE-5170 Calibration Worksheet

Site Information

Location:	Cleves, Ohio	**Site ID:**	South	**Date:**	16-Mar-21
Sampler:	E-5170 MFC	**Serial No:**		**Tech:**	S.Flesher

Site Conditions

Barometric Pressure (in Hg):	28.50	**Corrected Pressure (mm Hg):**	724
Temperature (deg F):	28	**Temperature (deg K):**	271
Average Press. (in Hg):	29.65	**Corrected Average (mm Hg):**	753
Average Temp. (deg F):	28	**Average Temp. (deg K):**	271

Calibration Orifice

Make:	Tisch	**Qstd Slope:**	1.67418
Model:	TE-5028A	**Qstd Intercept:**	-0.02696
Serial#:	1179	**Date Certified:**	6-Jul-20

Calibration Information

Plate or Test #	H2O (in)	Qstd (m3/min)	I (chart)	IC (corrected)
1	4.29	1.283	46.0	47.12
2	3.06	1.086	42.0	43.02
3	2.29	0.942	38.0	38.93
4	1.64	0.800	34.0	34.83
5	1.30	0.714	32.0	32.78

Linear Regression

Slope:	25.7261
Intercept:	14.5088
Corr. Coeff:	0.9979
# of Observations:	5

Calculations

Qstd = 1/m[Sqrt(H2O(Pa/Pstd)(Tstd/Ta))-b]

IC = I[Sqrt(Pa/Pstd)(Tstd/Ta)]

Qstd = standard flow rate

IC = corrected chart response

I = actual chart response

m = calibrator Qstd slope

b = calibrator Qstd intercept

Ta = actual temperature during calibration (deg K)

Pa = actual pressure during calibration (mm Hg)

Tstd = 298 deg K

Pstd = 760 mm Hg

For subsequent calculation of sampler flow:

1/m((I)[Sqrt(298/Tav)(Pav/760)]-b)

m = sampler slope

b = sampler intercept

I = chart response

Tav = daily average temperature

Pav = daily average pressure

Average I (chart): 44.0
Average Flow Calculation m3/min
1.223035397
Average Flow Calculation in CFM
43.18537986
Sample Time (Hrs): 24.0
Total Flow in m3/min
1761.170972
Total Flow in CFM
62186.94701

NOTE: Ensure calibration orifice has been certified within 12 months of use

Date	Location	Activity
2021-02-04	North PQ200	Leak test
2021-02-04	South PQ200	Leak test
2021-02-04	Northwest PQ200	Leak test
2021-03-08	North Tisch-5170	Motor change
2021-03-08	South Tisch-5170	Motor change
2021-03-16	North PQ200	Calibration
2021-03-16	South PQ200	Calibration
2021-03-31	North PQ200	Leak test
2021-03-31	South PQ200	Leak test
2021-03-31	Northwest PQ200	Leak test

APPENDIX E:
SAMPLE EDIT LOGS

APPENDIX E-1: TOTAL SUSPENDED PARTICULAR EDIT LOG

Emitter: New Gold Inc.

Address: Rainy River Mine

Station Name: Northwest Station

Station Location: Tailings Management Area

Pollutant/Parameter: Total Suspended Particulate (TSP)

Measurement Instrument: High Volume (Hi-Vol) Sampler

Start Date: January 1, 2021

End Date: March 31, 2021

#	Action	Start Date	Start Hour	End Date	End Hour	Reason
1	Invalid sample	March 23, 2021	00:00	March 23, 2021	23:59	Sampled air volume (1,897 m^3) exceeded the maximum allowable volume (1,794 m^3)

Emitter: New Gold Inc.

Address: Rainy River Mine

Station Name: Tait Road Station

Station Location: Near McMillan Road along the realigned Highway 600

Pollutant/Parameter: Total Suspended Particulate (TSP)

Measurement Instrument: High Volume (Hi-Vol) Sampler

Start Date: January 1, 2021

End Date: March 31, 2021

#	Action	Start Date	Start Hour	End Date	End Hour	Reason
1	Invalid sample	March 29, 2021	00:00	March 29, 2021	23:59	Sampled air volume (1,411 m^3) was below the minimum allowable volume (1,468 m^3)

APPENDIX E-2: RESPIRABLE PARTICULATE MATTER EDIT LOG

Emitter: New Gold Inc.

Address: Rainy River Mine

Station Name: Northwest Station

Station Location: Tailings Management Area

Pollutant/Parameter: Respirable Particulate Matter ($PM_{2.5}$)

Measurement Instrument: PQ200 Sampler

Start Date: January 1, 2021

End Date: March 31, 2021

#	Action	Start Date	Start Hour	End Date	End Hour	Reason
1	Invalid sample	Jan 4, 2021	00:00	Jan 4, 2021	23:59	No flow was recorded throughout the sampling period (i.e., 0 m^3)
2	Invalid sample	March 29, 2021	00:00	March 29, 2021	00:00	The sampler did not run

Emitter: New Gold Inc.

Address: Rainy River Mine

Station Name: Tait Road Station

Station Location: Near McMillan Road along the realigned Highway 600

Pollutant/Parameter: Respirable Particulate Matter ($PM_{2.5}$)

Measurement Instrument: PQ200 Sampler

Start Date: January 1, 2021

End Date: March 31, 2021

#	Action	Start Date	Start Hour	End Date	End Hour	Reason
1	Invalid sample	Jan 10, 2021	00:00	Jan 10, 2021	23:59	Sampled air volume (38.05 m^3) exceeded the maximum allowable volume (26.4 m^3)

NEW GOLD INC.

RAINY RIVER MINE

AMBIENT AIR QUALITY MONITORING PROGRAM

SECOND QUARTER 2021 REPORT

AUGUST 2021

ACRONYMS AND ABBREVIATIONS

$\mu g/m^3$	Microgram per Cubic Metre
AAQC	Ambient Air Quality Criteria
AAQO	Alberta Ambient Air Quality Objectives
ACFM	Cubic Feet Per Minute at Actual Conditions
AEP	Alberta Environment and Parks
ASTM	American Society for Testing and Materials
BCMOE	British Columbia Ministry of the Environment
CAAQS	Canadian Ambient Air Quality Standards
CFM	Cubic Foot Per Minute
Hi-Vol	High Volume Sampler
ICP/AES	Inductively Coupled Plasma / Atomic Emission Spectroscopy
ICP/MS	Inductively Coupled Plasma / Mass Spectrometry
LPM	Litres Per Minute
MECP	Ministry of the Environment, Conservation and Parks
NIST	National Institute of Standards and Technology
NO_2	Nitrogen Dioxide
$PM_{2.5}$	Particulate Matter less than 2.5 microns (µm) in diameter
POI	Point of Impingement
SO_2	Sulphur Dioxide
TSP	Total Suspended Particulate
U.S. EPA	United States Environmental Protection Agency
UTM	Universal Transverse Mercator

TABLE OF CONTENTS

SECTION 1. INTRODUCTION 1

SECTION 2. MONITORING STATIONS 3

2.1 METEOROLOGICAL STATION 3

SECTION 3. ANALYTICAL METHODS 10

3.1 TOTAL SUSPENDED PARTICULATE MATTER (TSP) AND METALS 10
3.2 RESPIRABLE PARTICULATE MATTER ($PM_{2.5}$) 10
3.3 TOTAL DUSTFALL 11
3.4 PASSIVE SAMPLING FOR SO_2 AND NO_2 11

SECTION 4. MONITORING METHODS 13

4.1 HI-VOL AND PQ200 SAMPLERS 13
4.2 DUSTFALL SAMPLERS 13
4.3 PASSIVE SAMPLERS 13

SECTION 5. SAMPLING ISSUES 14

5.1 PERFORMANCE AND SITE AUDITS 14
5.2 EQUIPMENT AND SAMPLING ISSUES 14

SECTION 6. SAMPLING RESULTS 15

6.1 TSP AND METALS 15
6.2 $PM_{2.5}$ 18
6.3 TOTAL DUSTFALL 19
6.4 PASSIVE SO_2 AND NO_2 26

SECTION 7. MITIGATION MEASURES 29

SECTION 8. CONCLUSION 30

SECTION 9. REFERENCES 31

SECTION 10. CLOSING 33

LIST OF TABLES

TABLE 2-1. AMBIENT AIR MONITORING STATIONS 3
TABLE 4-1. SAMPLER CALIBRATION DATES 13
TABLE 5-1. Q2 INVALIDATED SAMPLES 14
TABLE 6-1. TSP SUMMARY STATISTICS 16
TABLE 6-2. MAXIMUM CONCENTRATIONS OF METALS 16
TABLE 6-3. $PM_{2.5}$ SUMMARY STATISTICS 18
TABLE 6-4. TOTAL DUSTFALL SUMMARY STATISTICS 20
TABLE 6-5: MAXIMUM MONTHLY CONCENTRATIONS FOR DUSTFALL METALS 21
TABLE 6-6: SPP1 DUSTFALL SAMPLES VERSUS STOCKPILE SIZE AND WEATHER DATA 25
TABLE 6-7: SUMMARY STATISTICS FOR SO_2 AND NO_2 27

LIST OF FIGURES

FIGURE 2-1. AMBIENT AIR MONITORING STATION LOCATIONS 4
FIGURE 2-2. TAIT ROAD STATION SITING 5
FIGURE 2-3. GALLINGER ROAD STATION SITING 6
FIGURE 2-4. TAIT ROAD STATION DETAILED VIEW 7
FIGURE 2-5. NORTHWEST STATION SITING 8
FIGURE 2-6. SPP1 STATION SITING 9
FIGURE 6-1. TSP SAMPLING RESULTS 17
FIGURE 6-2. MAX METAL SAMPLING RESULT AS A FRACTION OF METAL AAQC 17
FIGURE 6-3. $PM_{2.5}$ SAMPLING RESULTS 19
FIGURE 6-4. TOTAL DUSTFALL SAMPLING RESULTS AT POI STATIONS 22
FIGURE 6-5. FIXED DUSTFALL SAMPLING RESULTS AT POI STATIONS 22
FIGURE 6-6. PERCENT OF FIXED DUSTFALL IN TOTAL DUSTFALL 23
FIGURE 6-7. FIXED DUSTFALL FRACTION VS. TOTAL DUSTFALL CONCENTRATION 23
FIGURE 6-8. DUSTFALL SAMPLING RESULTS AT ON-SITE STATIONS 24
FIGURE 6-9.FIXED DUSTFALL FRACTION VS. TOTAL DUSTFALL CONCENTRATION 24
FIGURE 6-10. DUSTFALL SAMPLING RESULTS AT SPP1 STATION 25
FIGURE 6-11. SPP1 DUSTFALL CONCENTRATIONS VS. STOCKPILE SIZE AND WEATHER DATA 26
FIGURE 6-12. SO_2 MONITORING RESULTS 28
FIGURE 6-13. NO_2 MONITORING RESULTS 28

LIST OF APPENDICES

APPENDIX A: SAMPLING RESULTS ..... **A**

APPENDIX A-1: TSP, METALS, AND $PM_{2.5}$ SAMPLING RESULTS ..... B
APPENDIX A-2: TOTAL DUSTFALL SAMPLING RESULTS ..... F
APPENDIX A-3: DUSTFALL METALS SAMPLING RESULTS L
APPENDIX A-4: SO_2 AND NO_2 PASSIVE SAMPLING RESULTS ..... P

APPENDIX B: NOTICE OF EXCEEDANCES FOR Q2 2021 ..... **R**

APPENDIX C: LABORATORY RESULTS ..... **S**

APPENDIX D: HI-VOL & PQ200 SAMPLER CALIBRATION SHEETS ..... **T**

APPENDIX E: SAMPLE EDIT LOGS ..... **U**

APPENDIX E-1: TOTAL SUSPENDED PARTICULATE SAMPLE EDIT LOG V
APPENDIX E-2: RESPIRABLE PARTICULATE MATTER SAMPLE EDIT LOG X
APPENDIX E-3: DUSTFALL SAMPLE EDIT LOG ..... Y

Section 1. INTRODUCTION

The following is a summary of the Second Quarter 2021 Report results of the Ambient Air Quality Monitoring Program undertaken at New Gold Inc.'s Rainy River Mine located north-west of Emo, Ontario.

In this quarter, New Gold Inc. (New Gold) staff operated and maintained the ambient air quality monitoring sampling stations; communicated with laboratory staff, as required; prepared data summary reports; and performed equipment calibrations at the various monitoring stations, as necessary.

This Quarterly Ambient Air Quality Report addresses the required elements of a Quarterly Report, as defined in the "Operations Manual for Air Quality Monitoring in Ontario" (Ontario Ministry of the Environment, Conservation and Parks, 2019), hereafter referred to as the Operations Manual. The following information is provided:

- Sampling Details
- Contaminant Summary Statistics
    - Number of Valid Samples and Percent Valid Data
    - Arithmetic and Geometric Means
    - Max Sampling Results
- Summary of Exceedances of All Applicable Limits (incl. Ontario AAQCs and CAAQS)

The purpose of the Ambient Air Quality Monitoring Program is to quantify the potential air quality effects associated with mining activities. The Program is conducted in accordance with the Site's Amended Environmental Compliance Approval (ECA) No. 0412-A2LR4V, issued on September 24, 2015, and the MECP Program Approval Letter, dated November 9, 2016.

The Program consists of two (2) sampling stations established in May 2015:

- South-west of the Site near McMillan Road along the realigned Highway 600 (Tait Road Station); and
- North-east of the Site along Gallinger Road (Gallinger Road Station).

These sampling stations consist of:

- One (1) High Volume (Hi-Vol) Sampler for discrete sampling of total suspended particulate (TSP) and metals;
- One (1) PQ200 Sampler for discrete sampling of respirable particulate matter ($PM_{2.5}$);
- One (1) passive dustfall collection unit for sampling dustfall; and
- One (1) passive sampling enclosure for sampling nitrogen dioxide (NO_2) and sulphur dioxide (SO_2).

In December 2020, two (2) additional sampling locations were added:

- North-west of the Tailings Management Area (Northwest Station), which includes a Hi-Vol Sampler (TSP and metals) and a PQ200 Sampler ($PM_{2.5}$); and
- Near the Stockpile Pond (SPP1 Station), which includes a passive dustfall collection unit.

In January 2021, a standard passive dustfall collection unit was added at the Northwest Station, allowing the station to monitor dustfall in addition to TSP, metals, and $PM_{2.5}$.

Also in January 2021, four (4) new sampling locations were added in accordance with the Rainy River Mine 2020 Ambient Air Quality Monitoring Program "Monitoring Supplement to Operations" document, dated July 28, 2020. These sampling locations measure passive dustfall at key locations throughout the property. Each station consists of a single passive dustfall collection unit. The stations are located as follows:

- North of the Pit at the South Runoff Pond (NOP1 Station);
- At the West Creek Point (WCP1 Station);
- At the Sedimentation Pond north of the Georgeson House (GH1 Station); and
- At Clark Pond (CP1 Station).

Section 2. MONITORING STATIONS

The ambient air quality monitoring stations were sited in accordance with the criteria stipulated in the Operations Manual (2019).

Universal Transverse Mercator (UTM) co-ordinates for each station based on the NAD83 co-ordinate system are presented in **Table 2-1**. The stations are shown in **Figure 2-1** through **Figure 2-6** below.

Table 2-1. Ambient Air Monitoring Stations

Station	UTM Co-ordinates			Parameters Monitored
	Easting (m)	Northing (m)	Zone	
Tait Road (Southwest Station)	426 072	5 406 996	15	TSP, Metals, $PM_{2.5}$, Dustfall, NO_2, SO_2
Gallinger Road (Northeast Station)	431 133	5 410 534	15	TSP, Metals, $PM_{2.5}$, Dustfall, NO_2, SO_2
Northwest Station (TMA)	419 797	5 413 042	15	TSP, Metals, $PM_{2.5}$, Dustfall
SPP1 Station (Stockpile Pond)	426 937	5 410 799	15	Dustfall
NOP1 Station (South Runoff Pond)	426 297	5 410 537	15	Dustfall
WCP1 Station (West Creek Pond)	425 616	5 411 230	15	Dustfall
GH1 Station (Sedimentation Pond)	423 939	5 411 468	15	Dustfall
CP1 Station (Clark Pond)	429 514	5 409 427	15	Dustfall

2.1 METEOROLOGICAL STATION

Barron Site, located near Heatwole Road, contains a meteorological station that provides real-time wind speed, wind direction, temperature, relative humidity, precipitation, and solar radiation data. All measurements taken at this Site are taken at a height of ten (10) metres above grade.

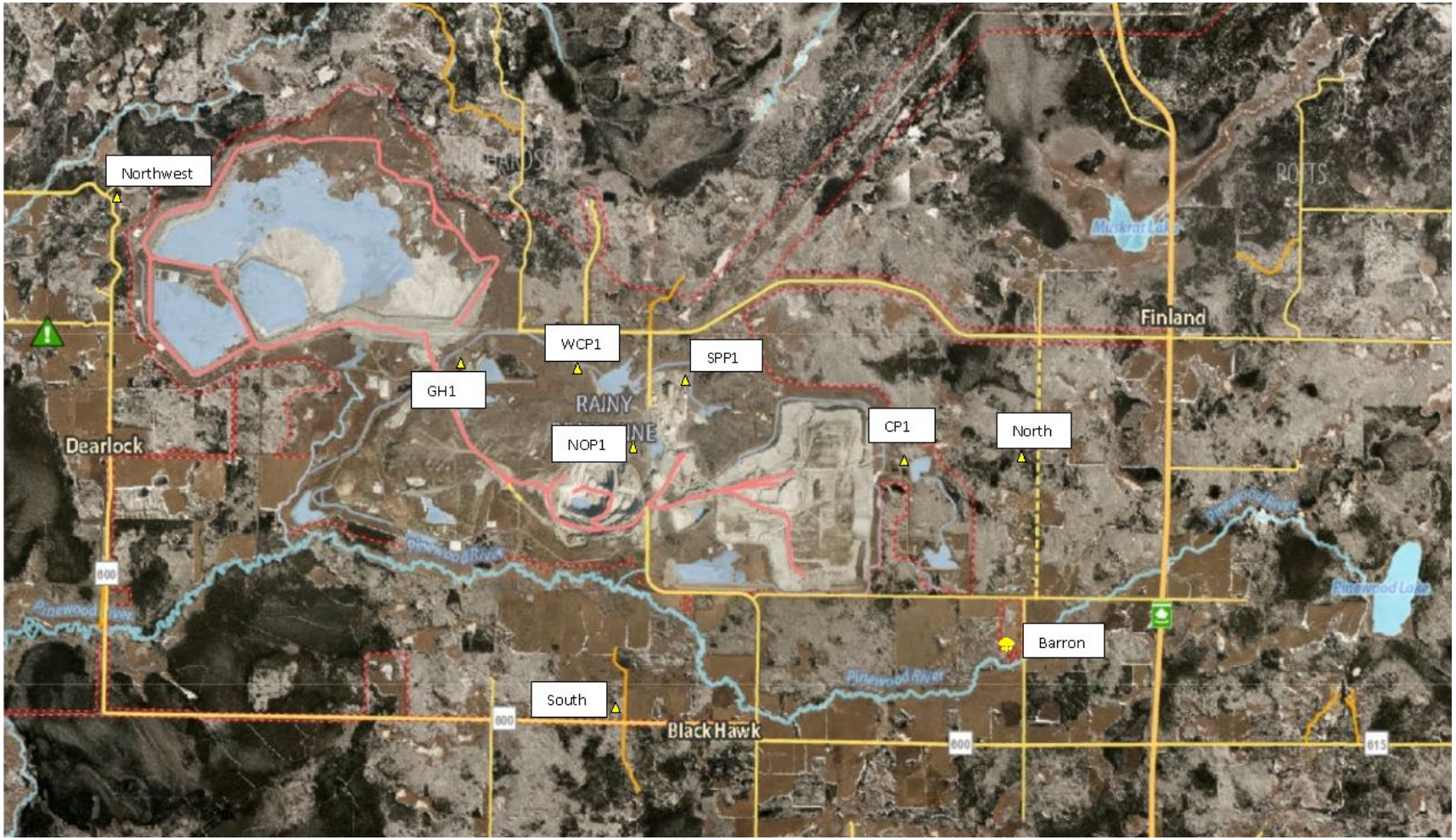

Figure 2-1. Ambient Air Monitoring Station Locations

Figure 2-2. Tait Road Station Siting

Figure 2-3. Gallinger Road Station Siting

Figure 2-4. Tait Road Station Detailed View

Figure 2-5. Northwest Station Siting

Figure 2-6. SPP1 Station Siting

Section 3. Analytical Methods

3.1 Total Suspended Particulate Matter (TSP) and Metals

24-hour average TSP and metal samples were collected as specified in the Operations Manual. Samples were collected every sixth (6th) day, as per the U.S. EPA Sampling Schedule (United States Environmental Protection Agency, 2020).

TSP and metal samples were collected using High Volume (Hi-Vol) Samplers with a brush motor and controlled mass flow. The samples are collected on an 8-inch by 10-inch Hi-Vol quartz filter.

TSP concentrations are determined using the standard gravimetric reference method described in Compendium Method IO-3.1 of the U.S. EPA's "Compendium of Methods for the Determination of Inorganic Compounds in Ambient Air" (1999).

The lowest detectable mass of TSP on the filter is 2,300 micrograms (µg). A valid 24-hour sample volume for the Hi-Vol Sampler ranges between 1,468 and 1,794 cubic metres (m^3). As such, the method detection limit (MDL) for TSP ranges between 1.28 and 1.57 micrograms per cubic metre ($\mu g/m^3$).

Metal concentrations are determined using Inductively Coupled Plasma Atomic Emission Spectroscopy (ICP/AES) based on Compendium Method IO-3.5 (U.S. EPA, 1999). The metals and metalloids (elements with both metallic and non-metallic properties) analyzed include arsenic (As), cadmium (Cd), chromium (Cr), cobalt (Co), copper (Cu), iron (Fe), lead (Pb), manganese (Mn), nickel (Ni), selenium (Se), vanadium (V), and zinc (Zn).

The total volume of each sample is calculated using methods recommended by the sampler manufacturer. These calculations account for ambient temperature and pressure, sampler flow rate, and individual monitor specifications. The calculations are not corrected for humidity.

3.2 Respirable Particulate Matter ($PM_{2.5}$)

Respirable particulate samples are collected at the same time as TSP samples (every sixth day, as per the EPA Sampling Schedule).

Samples are collected using PQ200 Samplers over a 24-hour period to align with the averaging time for the Canadian Ambient Air Quality Standard (CAAQS). The samples are collected on a 47-millimetre (mm) diameter polytetrafluoroethylene (PTFE; Teflon) filter.

$PM_{2.5}$ concentrations are determined using the standard gravimetric reference method outlined in the U.S. EPA's "Quality Assurance Guidance Document 2.12: Monitoring $PM_{2.5}$ in Ambient Air Using Designated Reference or Class I Equivalent Methods" (U.S. EPA, 2016).

The lowest detectable mass of $PM_{2.5}$ on the Teflon filter is 15 micrograms (µg). Based on a valid 24-hour sample volume ranging between 21.6 and 26.4 m^3, the MDL for $PM_{2.5}$ ranges between 0.57 and 0.69 $\mu g/m^3$.

Total sample volume is recorded mechanically by the PQ200 Samplers.

3.3 TOTAL DUSTFALL

Total dustfall deposition samples are collected over a 30-day period using standard plastic dustfall sampler jars with four (4) millimetre (mm) polyethylene liners. The dustfall jars are treated with an algaecide to prevent algal growth during the summer and alcohol to prevent freezing during the winter.

The sample jars measure roughly 15.4-centimetres (cm) in diameter by 30.5 cm in height.

The water soluble and insoluble portions of dustfall are determined by gravimetric analysis using the method described in Section G of British Columbia Ministry of the Environment's "Air Constituents – Inorganic" (British Columbia Ministry of the Environment, 2020).

Metal concentrations within the dustfall samples are determined using Inductively Coupled Plasma-Mass Spectrometry (ICP/MS) in accordance with U.S. EPA's Method 6020A (SW-846) (U.S. EPA, 1998). The metals and metalloids sampled include aluminum (Al), antimony (Sb), arsenic (As), barium (Ba), beryllium (Be), bismuth (Bi), boron (B), cadmium (Cd), calcium (Ca), chromium (Cr), cobalt (Co), copper (Cu), iron (Fe), lead (Pb), lithium (Li), magnesium (Mg), manganese (Mn), molybdenum (Mo), nickel (Ni), phosphorus (P), potassium (K), selenium (Se), silicon (Si), silver (Ag), sodium (Na), strontium (Sr), thallium (Tl), tin (Sn), titanium (Ti), uranium (U), vanadium (V), and zinc (Z).

The analysis method employed for total dustfall has an MDL of 0.3 grams per square metre per 30 days (g/m^2/30 days).

3.4 PASSIVE SAMPLING FOR SO_2 AND NO_2

Sulphur dioxide (SO_2) and nitrogen dioxide (NO_2) concentrations are monitored by passive monitoring devices over a 30-day exposure period. As such, sample uptake depends on temperature, relative humidity, and wind speed. To account for this, analytical results are adjusted based on the monthly averages for these meteorological parameters throughout the exposure period. The required meteorological data are obtained by Maxxam Analytics from the Environment and Climate Change Canada website for the Fort Frances meteorological station (Climate ID 6022474) with each sample submission.

Since there is currently no MECP guidance on 30-day passive sampling of NO_2 or SO_2, sampling is performed using the methodology developed, approved, and validated by Alberta Environment with the support of the Alberta Research Council, the Clean Air Strategic Alliance of Alberta, and the National Research Council of Canada (Bari, Curran, & Kindzierski, 2015).

For both SO_2 and NO_2, the analytical MDL is on the order of 0.1 parts per billion by volume (ppbv). Validation tests conducted in Alberta show that results from passive sampling are typically within ten percent (10%) of those obtained from sampling with continuous analyzers for 30-day exposure periods (2015).

Since there are no MECP guidelines for monthly concentrations of SO_2 or NO_2 obtained from passive sampling, this data is used solely for screening purposes.

For NO_2, the monthly results are compared against Ontario's 24-hour AAQC (200 $\mu g/m^3$) converted to an equivalent 30-day (720-hour) average (78 $\mu g/m^3$) using the methodology outlined

in the MECP's "Guideline A-10: Procedure for Preparing an Emission Summary and Dispersion Modelling Report" (Ontario Ministry of the Environment, Conservation and Parks, 2019).

For SO_2, the monthly results are compared against Alberta's 30-day Ambient Air Quality Objective (AAQO) of 30 µg/m^3 (Alberta Environment and Parks, 2019).

Section 4. Monitoring Methods

4.1 Hi-Vol and PQ200 Samplers

Stations are visited every six days to take samples for TSP, metals, and $PM_{2.5}$. The exposed filter is recovered, and a pre-weighed filter is installed for the subsequent sample run.

Additional visits are made to the stations, as required, to resolve instrumentation issues, perform flow calibration checks, and preventative/proactive maintenance. All calibrations are performed in accordance with manufacturer specifications.

Flow calibrations are performed at least once per quarter by New Gold staff on the Hi-Vol TE-5170 Samplers using a Tisch Delta Calibration kit. The flow is calibrated to a flow rate of 1,133 litres per minute (LPM), which produces a sample volume of 1,632 m^3 in a 24-hour period.

Flow, temperature, and pressure calibrations are performed at least once per quarter by New Gold staff on the PQ200 Samplers using an electronic BGI Flow Calibrator. The flow is calibrated to a flow rate of 16.7 LPM, which produces a sample volume of 24 m^3 in a 24-hour period.

Table 4-1 below outlines the dates on which calibrations were performed on the Hi-Vol and PQ200 Samplers in this quarter. Calibration sheets for the samplers can be found in **Appendix D**.

Table 4-1. Sampler Calibration Dates

Station	Hi-Vol Sampler Calibration Date	PQ200 Sampler Calibration Date
Tait Road (Southwest Station)	June 30th	June 30th
Gallinger Road (Northeast Station)	June 30th	June 30th
Northwest Station (TMA)	April 29th	May 6th

4.2 Dustfall Samplers

The dustfall samplers containing algaecide are changed monthly to correspond with the 30-day exposure period.

Dustfall jars are provided by the laboratory with screw-on lids to prevent sample loss during transport.

4.3 Passive Samplers

The permeation filters in the passive samplers are also changed monthly to correspond with the 30-day exposure period.

Filters are kept in cassettes inside Ziploc bags until deployment to prevent premature exposure. After the sample is collected, the filter is placed back into the cassette and back into the Ziploc bag for shipment to the lab.

Section 5. Sampling Issues

5.1 Performance and Site Audits

There were no MECP audits conducted in Q2 2021.

5.2 Equipment and Sampling Issues

There were nine (9) samples invalidated in this quarter, as described in the table below and in **Appendix E**.

Table 5-1. Q2 Invalidated Samples

Sample Date	Station	Contaminant	Reasoning
April 10th	Gallinger Road	TSP	Sample volume less than minimum allowable volume
April 16th	Gallinger Road	TSP	Sample volume less than minimum allowable volume
April 16th	Tait Road	TSP	Sample volume less than minimum allowable volume
April 16th	Northwest	TSP	Sample volume less than minimum allowable volume
April 22nd	Gallinger Road	TSP	Sampler did not record sample volume
April 22nd	Gallinger Road	$PM_{2.5}$	Sampler did not record sample volume
May 22nd	Gallinger Road	TSP	Sample volume less than minimum allowable volume
June 2nd	SPP1	Dustfall	Sampler analysis not returned
June 15th	Northwest	TSP	Sample volume above maximum allowable volume

Section 6. SAMPLING RESULTS

Sampling results for Q2 are presented in **Section 6.1** and **Appendix A-1** for TSP and metals, **Section 6.2** and **Appendix A-1** for $PM_{2.5}$, **Section 6.3** and **Appendices A-2** and **A-3** for total dustfall, and **Section 6.4** and **Appendix A-4** for passive SO_2 and NO_2.

In performing statistical analyses, as per the Operations Manual, a value of half the method detection limit is substituted for concentrations that are reported below the method detection limit. Laboratory Certificates of Analysis for all samples collected in Q2 are provided in **Appendix C**.

For comparative purposes, the Ontario AAQC and Canadian AAQS values are presented, where available. It is important to note that the Ontario AAQCs are equivalent to the standards prescribed by *Ontario Regulation 419/05: Air Pollution – Local Air Quality* (Government of Ontario, 2019).

Q2 presented fifteen (15) possible sampling days between April 1, 2021 and June 30, 2021 for the 6-day sampling schedule. Summaries of the analyses for TSP, metals, and $PM_{2.5}$ are presented in **Table 6-1, Table 6-2,** and **Table 6-3**, respectively.

Summaries of the analyses for total dustfall (incl. metals) and passive SO_2 and NO_2 are presented in **Table 6-4**, **Table 6-5**, **Table 6-6**, and **Table 6-7**.

6.1 TSP AND METALS

In this quarter, the Gallinger Road Station collected eleven (11) valid samples (73% valid data), the Tait Road Station collected fourteen (14) valid samples (93% valid), and the Northwest Station collected thirteen (13) valid samples (87% valid). Since the Tait Road Stations is above the 90% valid data threshold, statistical analyses for TSP and metals for Tait Road are computed using only valid data. For the other stations (i.e., Gallinger Road and Northwest), statistical analyses are performed using all data, including invalid data, except for the April 22nd sample at the Gallinger Road Station because no sample was taken.

For this quarter, the arithmetic mean TSP concentration was 48.49 µg/m^3 at the Tait Road Station, 35.39 µg/m^3 at the Gallinger Road Station, and 26.72 µg/m^3 at the Northwest Station. Geometric means for the three stations were 42.44 µg/m^3, 27.49 µg/m^3, and 20.83 µg/m^3, respectively.

The maximum 24-hour concentration for TSP was 83.64 µg/m^3 at the Tait Road Station on April 22nd, 74.59 µg/m^3 at the Gallinger Road Station on May 10th, and 69.23 µg/m^3 at the Northwest Station on April 4th.

Laboratory data are provided as the mass of contaminant on the filter, in micrograms. This is divided by the total sample volume measured by the Hi-Vol Sampler to determine the concentration of the contaminant in the sample using the following equation:

$$Concentration\ (\mu g/m^3) = \frac{Laboratory\ Measured\ Mass\ (\mu g)}{Sample\ Volume\ (m^3)}$$

In this quarter, there were no samples that exceeded the TSP AAQC (120 µg/m^3).

Data is summarized for TSP and metals in **Table 6-1** and **Table 6-2**. Sample data from all runs and further statistical analyses are presented in **Appendix A-1**, **Figure 6-1**, and **Figure 6-2.**

Table 6-1. TSP Summary Statistics. Concentrations presented in µg/m³.

	Tait Road Station	Gallinger Road Station	Northwest Station
Number of Valid Samples	14	11	13
% Valid Data	93%	73%	87%
Arithmetic Mean	48.49	35.39	26.72
Geometric Mean	42.44	27.49	20.83
April Maximum	83.64	22.86	69.23
May Maximum	65.63	74.59	57.13
June Maximum	81.32	57.61	48.12
24-Hour Maximum	83.64	74.59	69.23
24-Hour Minimum	13.57	5.93	5.89
90th Percentile	80.76	57.33	53.53
95th Percentile	82.13	63.55	60.76
TSP AAQC	120	120	120
Samples > TSP AAQC	0	0	0
Samples > Metal AAQC	0	0	0

Table 6-2. Maximum Concentrations of Metals. Concentrations presented in µg/m³.

Metal	24-Hour AAQC	Tait Road Station		Gallinger Road Station		Northwest Station	
		Maximum Concentration	Fraction of AAQC	Maximum Concentration	Fraction of AAQC	Maximum Concentration	Fraction of AAQC
As	0.3	1.02E-03	0.34%	1.24E-03	0.41%	2.06E-03	0.69%
Cd	0.025	6.78E-04	2.71%	8.29E-04	3.32%	1.37E-03	5.50%
Cr	0.5	6.17E-03	1.23%	3.90E-03	0.78%	4.49E-03	0.90%
Co	0.1	1.63E-03	1.63%	8.29E-04	0.83%	1.37E-03	1.37%
Cu	50	9.70E-02	0.19%	1.83E-01	0.37%	1.83E-01	0.37%
Fe	4	2.74	68.61%	1.62	40.43%	1.90	47.52%
Pb	0.5	4.88E-03	0.98%	1.24E-03	0.25%	4.74E-03	0.95%
Mn	0.4	6.99E-02	17.48%	4.71E-02	11.78%	8.14E-02	20.34%
Ni	0.2	3.69E-03	1.84%	1.94E-03	0.97%	4.19E-03	2.10%
Se	10	3.39E-03	0.03%	4.15E-03	0.04%	6.87E-03	0.07%
V	2	4.70E-03	0.24%	2.07E-03	0.10%	3.52E-03	0.18%
Zn	120	4.91E-02	0.04%	2.99E-02	0.02%	4.81E-02	0.04%

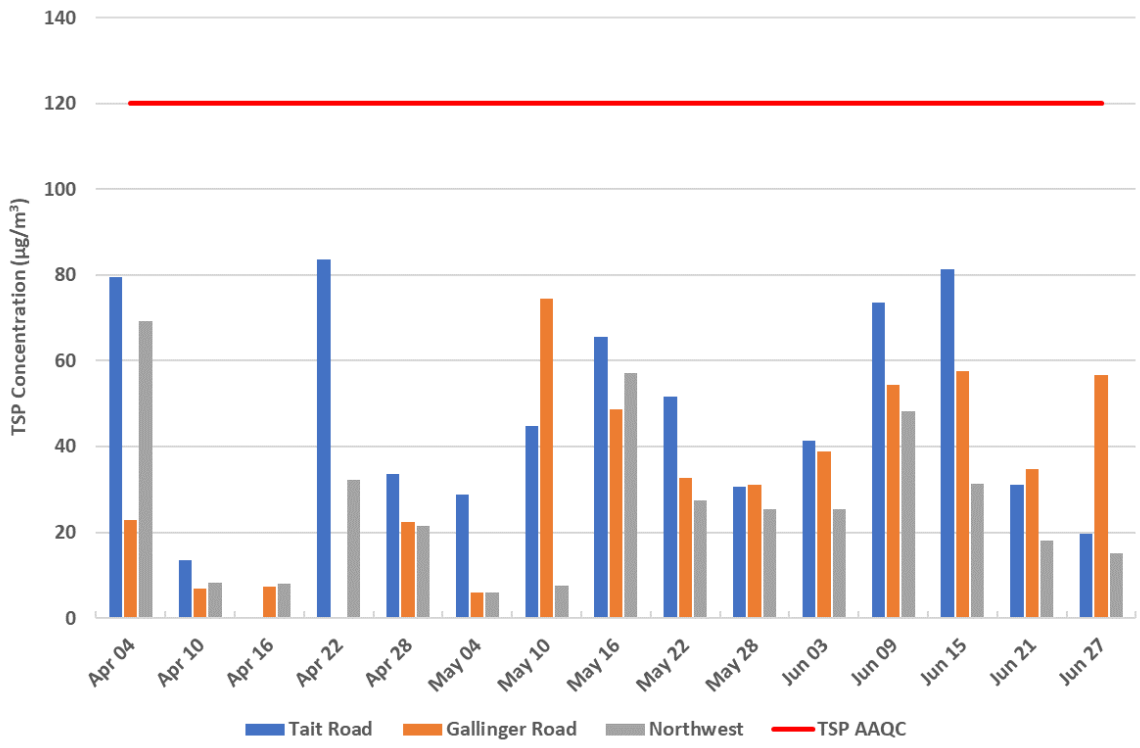

Figure 6-1. TSP Sampling Results

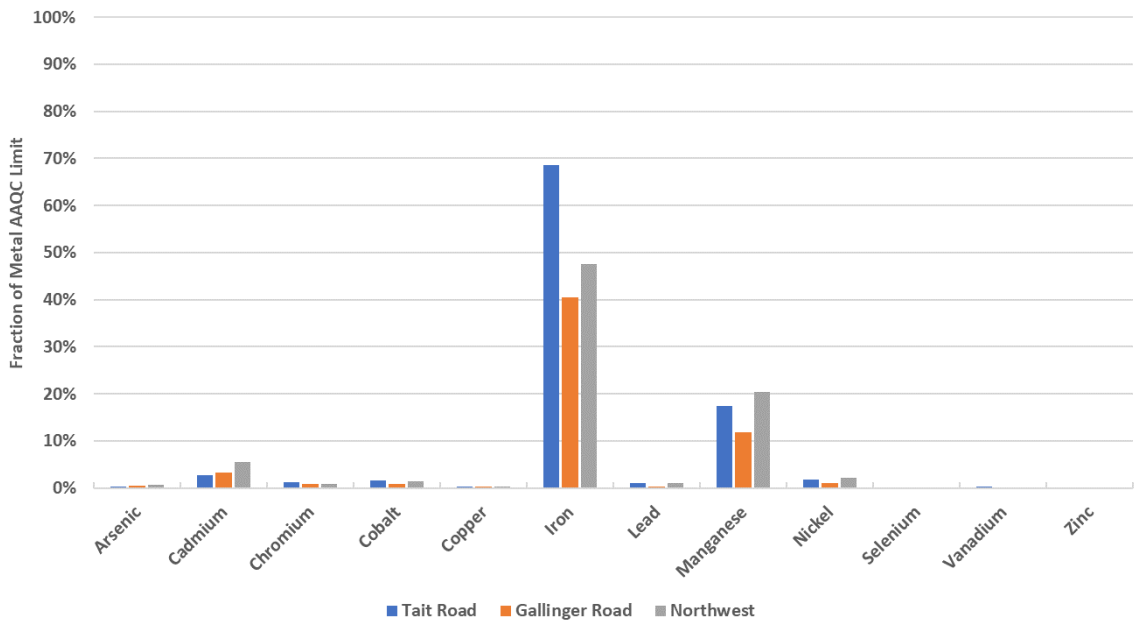

Figure 6-2. Max Metal Sampling Result as a Fraction of Metal AAQC

6.2 $PM_{2.5}$

In this quarter, the Gallinger Road Station collected fourteen (14) valid samples (93% valid data), while the Tait Road and Northwest Stations collected fifteen (15) valid samples (100% valid). Statistical analyses for respirable particulate matter for all stations are computed using only valid data since they are all above the 90% valid data threshold.

For this quarter, the arithmetic mean $PM_{2.5}$ concentrations were 3.50 µg/m^3, 2.07 µg/m^3, and 2.56 µg/m^3 for the Tait Road, Gallinger Road, and Northwest Stations, respectively.

The maximum 24-hour concentrations for $PM_{2.5}$ were 6.70 µg/m^3 at the Tait Road Station on April 28th, 5.29 µg/m^3 at the Gallinger Road Station on June 9th, and 6.74 µg/m^3 at the Northwest Station on June 9th.

Laboratory data is provided as the mass of $PM_{2.5}$ on the filter, in micrograms. This value is divided by the total sample volume measured by the PQ200 Sampler to determine the concentration of $PM_{2.5}$ in the sample using the following equation:

$$Concentration\ (\mu g/m^3) = \frac{Laboratory\ Measured\ Mass\ (\mu g)}{Sample\ Volume\ (m^3)}$$

In this quarter, there was no samples that exceeded the $PM_{2.5}$ AAQC or CAAQS (27 µg/m^3).

Data is summarized for $PM_{2.5}$ in **Table 6-3**. Sample data from all runs and further statistical analyses are presented in **Appendix A-1** and **Figure 6-3**.

Table 6-3. $PM_{2.5}$ Summary Statistics. Concentrations presented in µg/m^3.

	Tait Road Station	Gallinger Road Station	Northwest Station
Number of Valid Samples	15	14	15
% Valid Data	100%	93%	100%
Arithmetic Mean	3.50	2.07	2.56
Geometric Mean	2.39	1.16	1.61
April Maximum	6.70	3.29	4.12
May Maximum	5.67	4.37	5.03
June Maximum	6.09	5.29	6.74
24-Hour Maximum	6.70	5.29	6.74
24-Hour Minimum	*0.31*	*0.31*	*0.31*
90th Percentile	5.97	4.23	4.98
95th Percentile	6.27	4.69	5.54
$PM_{2.5}$ AAQC	27	27	27
Samples > $PM_{2.5}$ AAQC	0	0	0

	Tait Road Station	Gallinger Road Station	Northwest Station
MDL (µg)	15	15	15
Samples < MDL	2	6	3

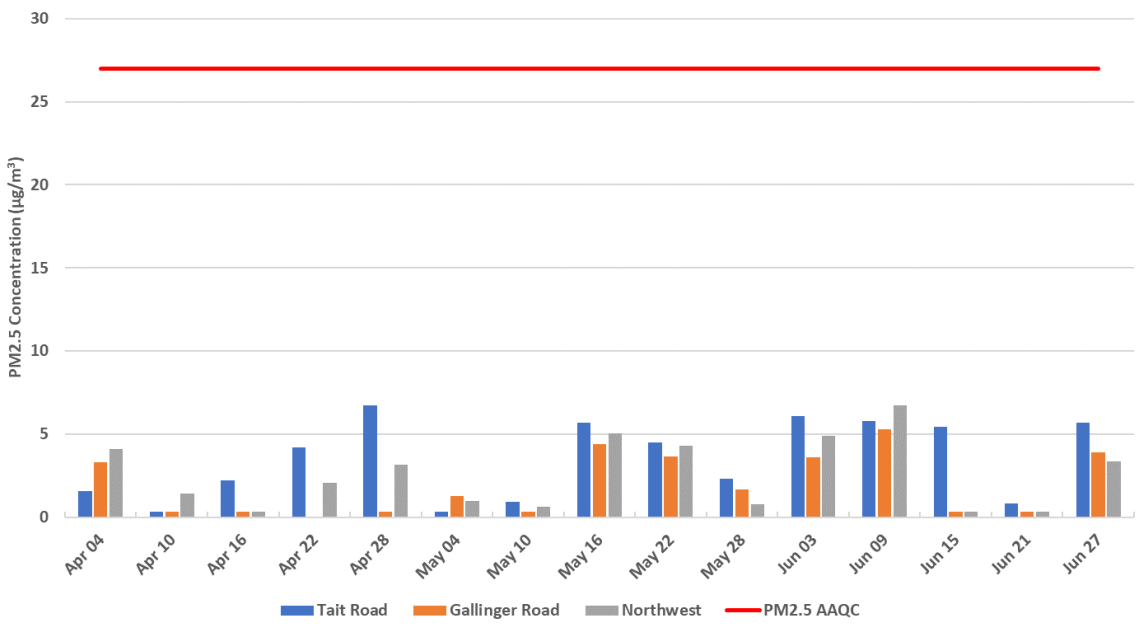

Figure 6-3. $PM_{2.5}$ Sampling Results

6.3 TOTAL DUSTFALL

New Gold operates eight (8) ambient monitoring stations that measure 30-day dustfall levels: Tait Road, Gallinger Road, Northwest, SPP1, NOP1, WCP1, GH1, and CP1. Of these stations, only the Tait Road, Gallinger Road, and Northwest Stations are considered POI receptors, so measurements at the other stations are used solely for monitoring changes in dustfall over time and are not compared against the AAQC limit for the purpose of determining exceedances of the limit.

In this quarter, the Tait Road, Gallinger Road, and Northwest Station collected three (3) valid samples (100% valid data). Likewise, NOP1, CP1, WCP1, and GH1 Stations collected three (3) valid samples (100% valid data). Sampling at the SPP1 Station occurs on a weekly basis, and there were twelve (12) valid samples collected (92% valid data).

Laboratory data is provided as the mass of dustfall on the filter per square decimeter per day, in milligrams per decimeter square per day. This value is then converted to the appropriate units for reporting using the equation seen below:

$$Concentration\left(\frac{g}{m^2 \cdot 30\ days}\right) = Lab\ Concentration\left(\frac{mg}{dm^2 \cdot day}\right) \times \frac{1\ g}{1000\ mg} \times \frac{100\ dm^2}{1\ m^2} \times \frac{30\ days}{30\ days}$$

During the laboratory analysis, total dustfall is speciated into soluble and insoluble portions, as well as fixed and volatile portions. The fixed portion of total dustfall is the portion of the total dustfall that remains after the sample is ignited at 550°C. The mass of the sample lost during ignition represents the volatile portion. In the summer months (esp. Q2 and Q3), the volatile portion of the dustfall is largely made up of large particles (e.g., leaves, twigs, bugs, etc.) that are deposited and retained in the sample. As a result, the total dustfall may overestimate the actual dustfall mass in the sample. For this reason, the analysis of dustfall shows both fixed dustfall and total dustfall.

In this quarter, there were four (4) samples that exceeded the total dustfall 30-day Ontario AAQC (7 g/m^2/30 days). These exceedances of the total dustfall limit occurred at the Tait Road Station in May (10.35 g/m^2/30 days) and June (15.96 g/m^2/30 days), and the Northwest Station in May (9.18 g/m^2/30 days) and June (11.40 g/m^2/30 days). However, when the fixed dustfall component is compared against the dustfall limit, there were no exceedances. In this quarter, samples that did not exceed the dustfall limit were, on average, 45% volatile by mass; however, samples that did exceed the limit averaged 78% volatile by mass. Evidently, dustfall exceedances at the Tait Road and Northwest Stations are largely driven by elevated volatile dustfall fractions, while the fixed fraction remains consistently below the limit. The total dustfall versus fixed dustfall masses are compared in **Figure 6-5** and **Figure 6-6**.

Data is summarized for total dustfall in **Table 6-4**. Sample data from all runs and further statistical analyses are presented in **Appendix A-2**. Data is presented in **Table 6-5** and **Appendix A-3** for the metal concentrations measured in the dustfall at stations where metal samples are not taken by the Hi-Vol Sampler (i.e., SPP1, NOP1, WCP1, GH1, and CP1). **Table 6-6** compares the SPP1 dustfall concentrations against the stockpile elevation and weather conditions.

Table 6-4. Total Dustfall Summary Statistics. Concentrations presented in g/m^2/30 days.

	Tait Road Station	Gallinger Road Station	Northwest Station	SPP1 Station	NOP1 Station	WCP1 Station	GH1 Station	CP1 Station
Number of Valid Samples	3	3	3	12	3	3	3	3
% Valid Data	100%	100%	100%	92%	100%	100%	100%	100%
Arithmetic Mean	10.55	3.77	8.53	96.69	29.66	87.08	14.04	35.55
Monthly Maximum	15.96	6.48	11.40	393.00	69.60	134.40	26.10	73.80
Samples > Dustfall AAQC	2	0	2	10	3	3	2	2
Samples < MDL	0	0	0	1	0	0	0	0

Table 6-5: Maximum Monthly Concentrations for Dustfall Metals. Concentrations presented in g/m²/30 days.

Metal	SPP1 Station	NOP1 Station	WCP1 Station	GH1 Station	CP1 Station
Aluminum	5.70E-01	1.80E-01	1.40E-01	3.99E-02	6.48E-02
Antimony	1.20E-04	1.28E-05	1.17E-05	6.60E-06	9.00E-06
Arsenic	1.10E-03	1.94E-04	2.57E-04	6.00E-05	8.85E-05
Barium	9.03E-03	1.51E-03	1.80E-03	3.45E-04	2.18E-03
Beryllium	1.43E-04	1.65E-05	1.50E-05	1.07E-05	1.65E-05
Bismuth	1.43E-04	1.65E-05	1.50E-05	1.07E-05	1.65E-05
Boron	1.17E-02	3.30E-04	1.68E-03	4.50E-04	9.00E-04
Cadmium	7.23E-04	3.18E-05	9.57E-05	6.12E-06	2.19E-05
Calcium	9.54	1.13	2.03E+00	3.39E-01	1.51
Chromium	9.39E-04	1.98E-04	2.93E-04	1.03E-04	1.74E-04
Cobalt	5.82E-04	7.74E-05	2.80E-04	3.03E-05	7.05E-05
Copper	2.15E-02	6.90E-04	8.37E-03	5.01E-04	4.38E-03
Iron	6.57E-01	1.46E-01	2.32E-01	4.50E-02	8.52E-02
Lead	6.60E-03	5.58E-04	4.05E-04	4.83E-05	1.37E-04
Lithium	1.43E-03	2.67E-04	3.36E-04	1.07E-04	1.65E-04
Magnesium	1.73	3.24E-01	3.63E-01	1.14E-01	4.29E-01
Manganese	7.50E-02	1.13E-02	1.24E-02	3.90E-03	7.11E-03
Molybdenum	1.29E-03	2.10E-05	4.35E-04	7.98E-05	3.30E-04
Nickel	4.17E-03	1.92E-04	6.60E-04	1.38E-04	3.12E-04
Phosphorus	17.60	8.40E-03	4.65E+00	4.50E-01	1.97
Potassium	19.70	8.28E-02	7.98E+00	6.42E-01	4.14
Selenium	1.16E-03	3.30E-05	3.87E-04	2.10E-05	1.98E-04
Silicon	1.03	3.06E-01	3.06E-01	5.94E-02	1.25E-01
Silver	1.05E-04	2.69E-05	2.69E-05	1.68E-06	6.57E-06
Sodium	5.31	3.48E-02	1.80E+00	1.16E-01	9.87E-01
Strontium	1.30E-02	1.87E-03	2.43E-03	7.47E-04	2.27E-03
Thallium	2.85E-05	3.30E-06	3.00E-06	2.10E-06	3.45E-06
Tin	2.85E-05	4.20E-06	7.80E-06	2.10E-06	5.40E-06
Titanium	8.28E-03	3.48E-03	2.94E-03	5.85E-04	1.53E-03
Uranium	5.16E-05	5.61E-06	1.21E-05	2.25E-06	1.77E-05
Vanadium	1.22E-03	2.13E-04	3.69E-04	9.30E-05	1.56E-04
Zinc	1.62E-01	8.58E-03	3.81E-02	2.95E-03	1.74E-02

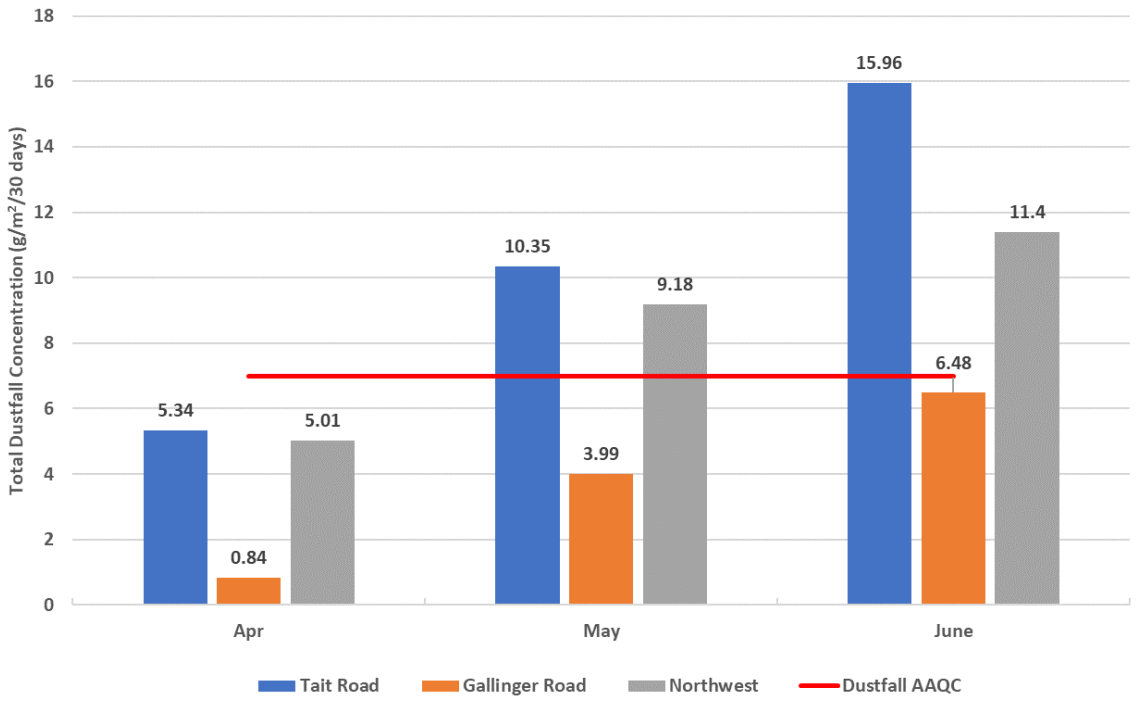

Figure 6-4. Total Dustfall Sampling Results at POI Stations

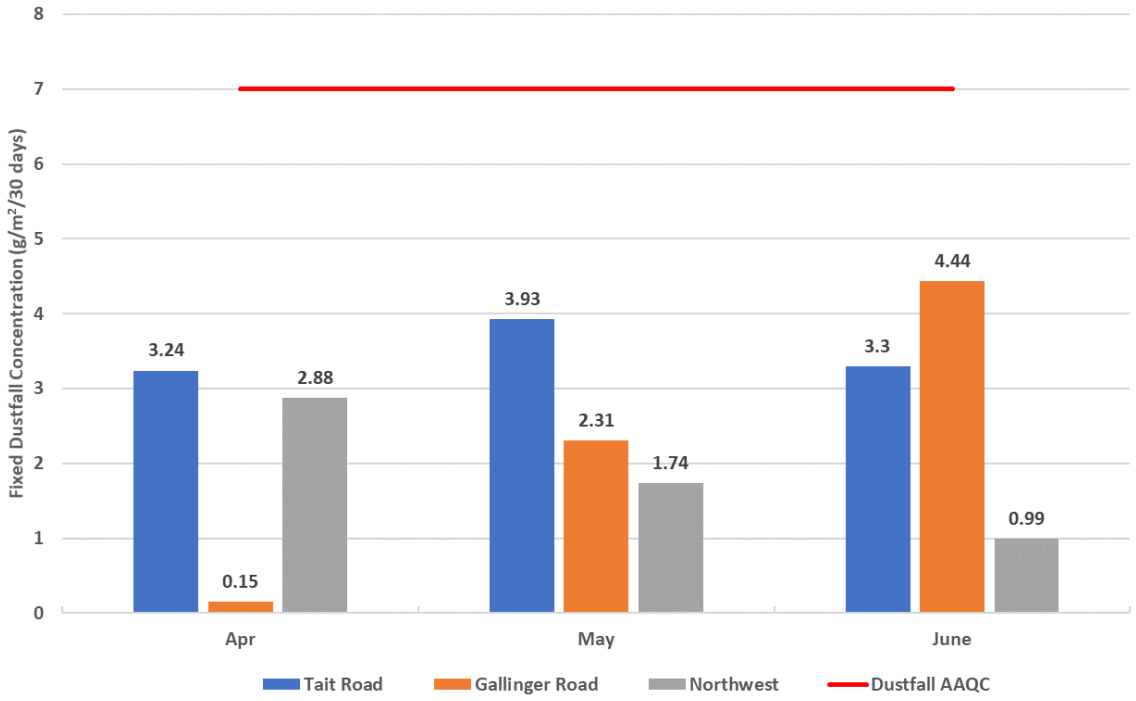

Figure 6-5. Fixed Dustfall Sampling Results at POI Stations

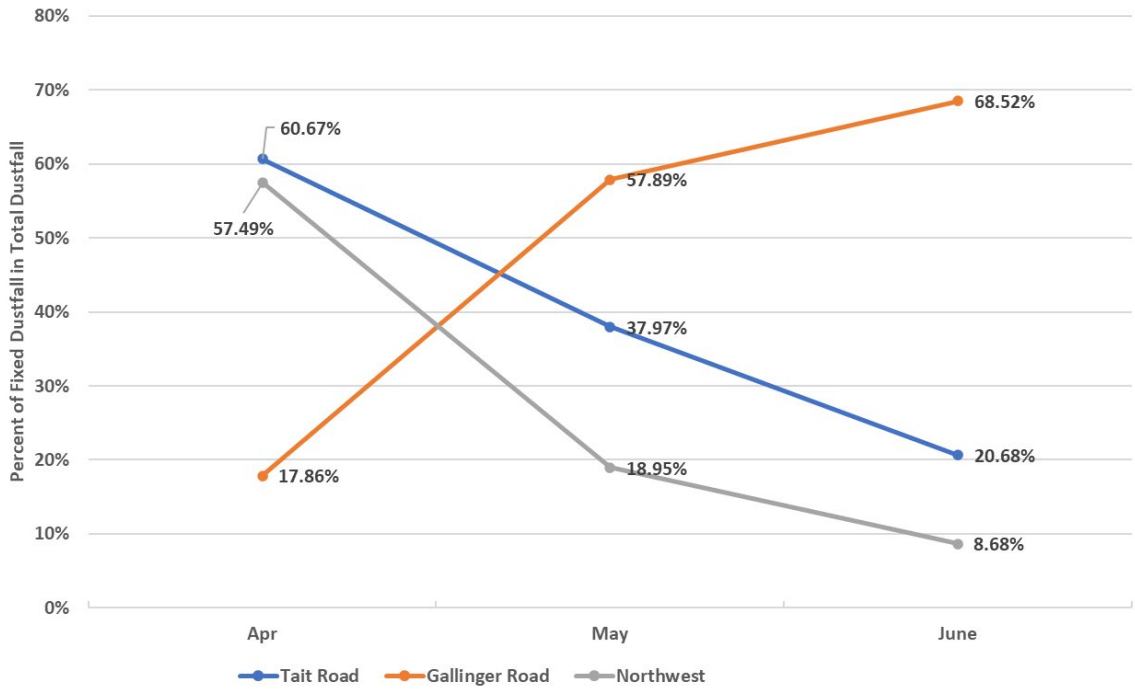

Figure 6-6. Percent of Fixed Dustfall in Total Dustfall

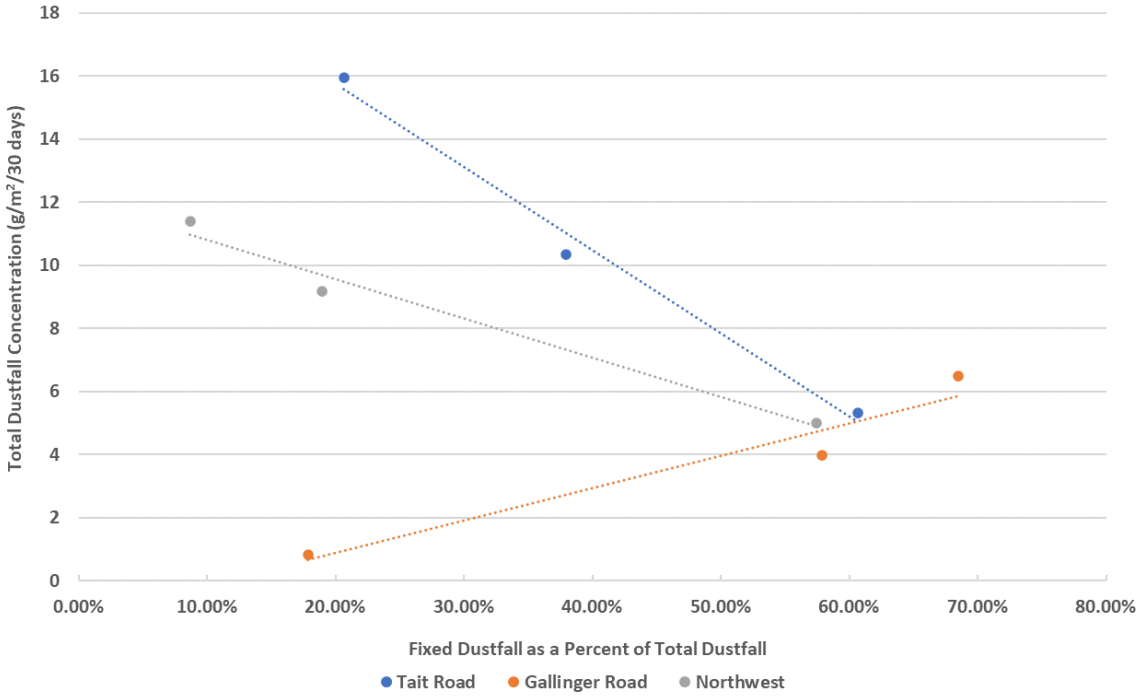

Figure 6-7. Fixed Dustfall Fraction vs. Total Dustfall Concentration

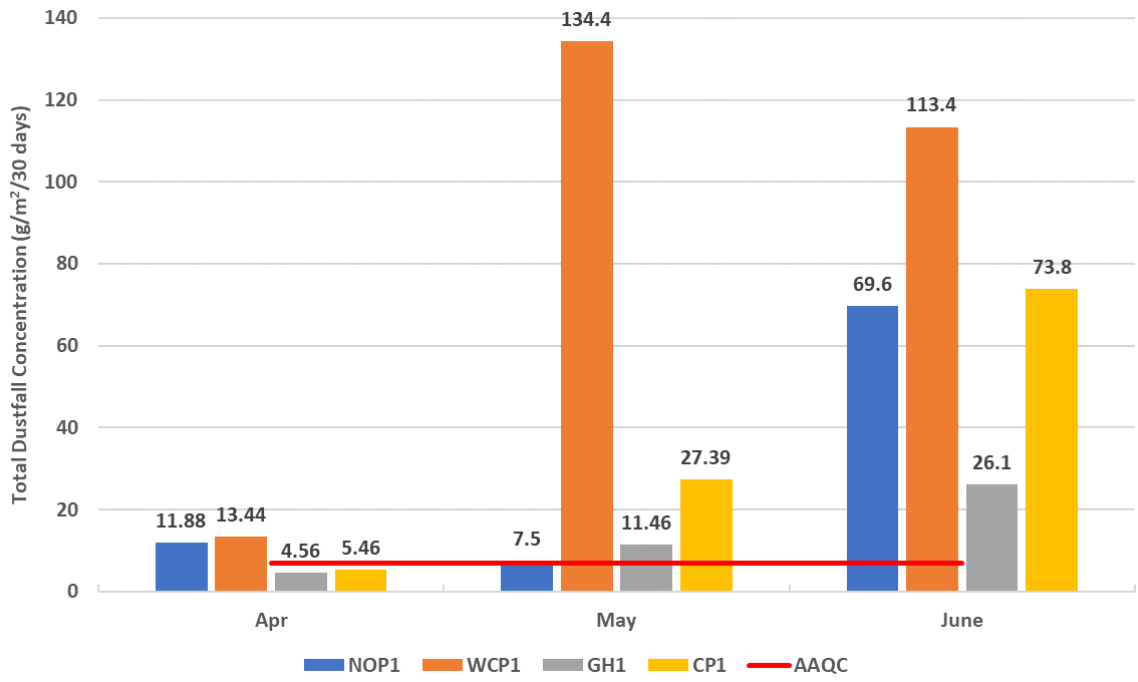

Figure 6-8. Dustfall Sampling Results at On-Site Stations

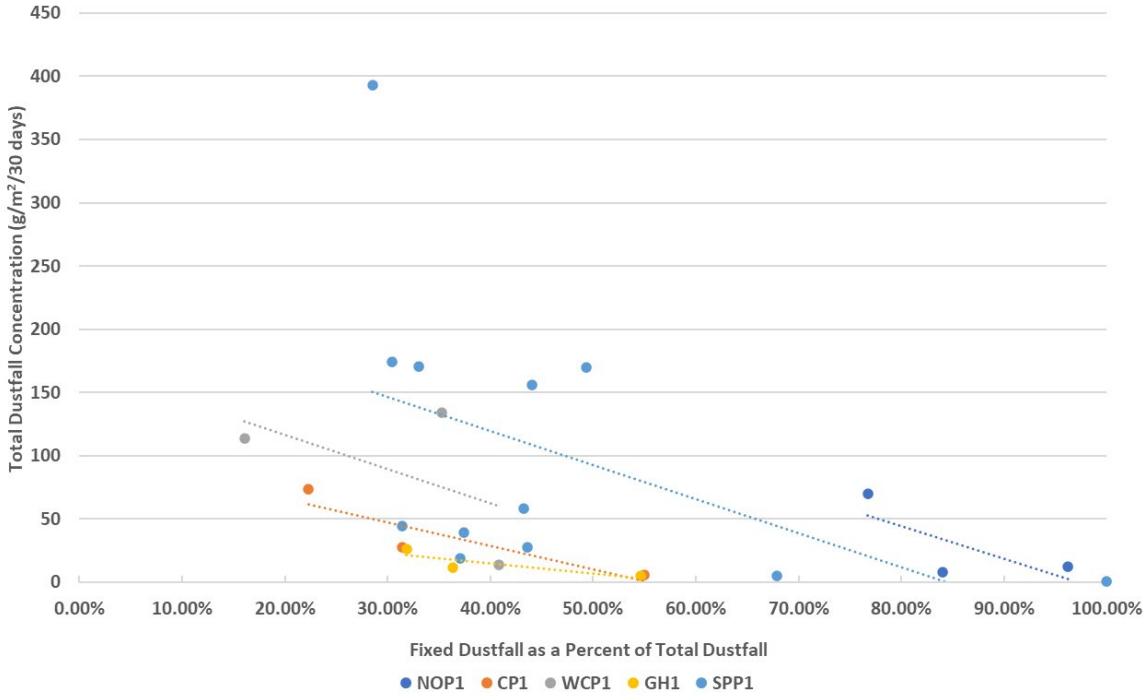

Figure 6-9.Fixed Dustfall Fraction vs. Total Dustfall Concentration

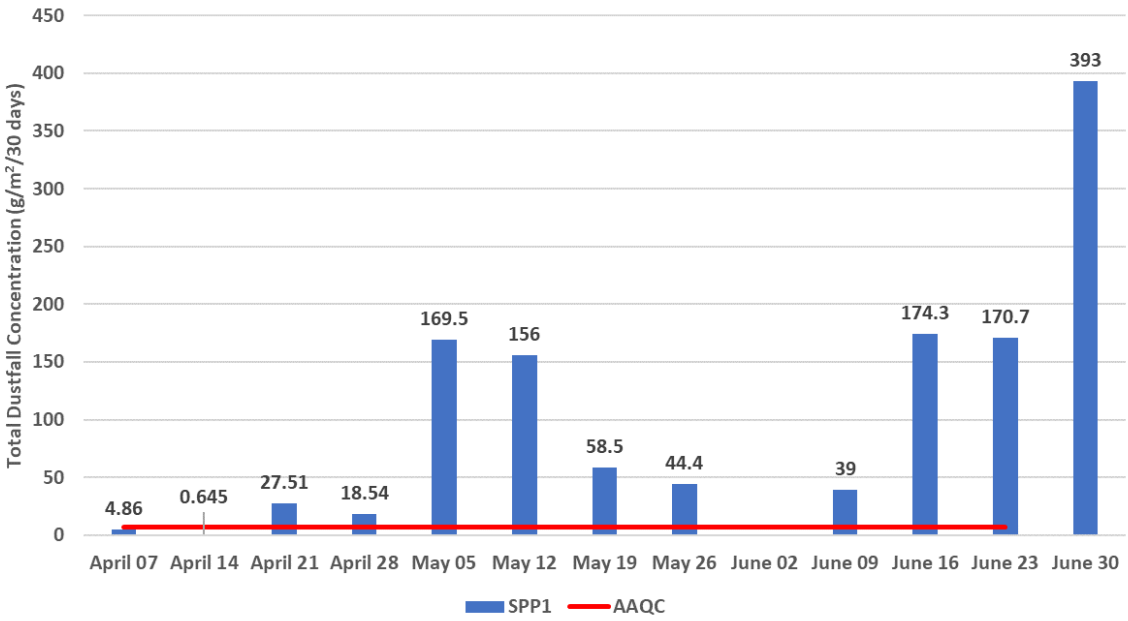

Figure 6-10. Dustfall Sampling Results at SPP1 Station

Table 6-6: SPP1 Dustfall Samples versus Stockpile Size and Weather Data

Start Date	Stop Date	Stockpile Size	Precipitation	Avg. Wind Speed	Avg. Wind Direction	Total Dustfall
		(%)	(mm)	(km/hr)	(°)	(g/m²/30 days)
April 7	April 14	53.4%	25.5	11.11	45	4.86
April 14	April 21	57.2%	6.60	8.33	0	0.65
April 21	April 28	81.2%	0.50	9.41	202.5	27.51
April 28	May 5	91.9%	8.60	7.50	337.5	18.54
May 5	May 12	72.4%	0.00	6.80	22.5	169.50
May 12	May 19	82.2%	0.00	6.40	202.5	156.00
May 19	May 26	91.6%	13.40	8.70	67.5	58.50
May 26	June 2	89.9%	5.20	7.60	180	44.40
June 2	June 9	80.7%	0.90	6.00	45	-
June 9	June 16	90.9%	8.10	8.90	45	39.00
June 16	June 23	75.8%	2.80	7.20	292.5	174.30
June 23	June 30	84.5%	10.20	5.40	270	170.70

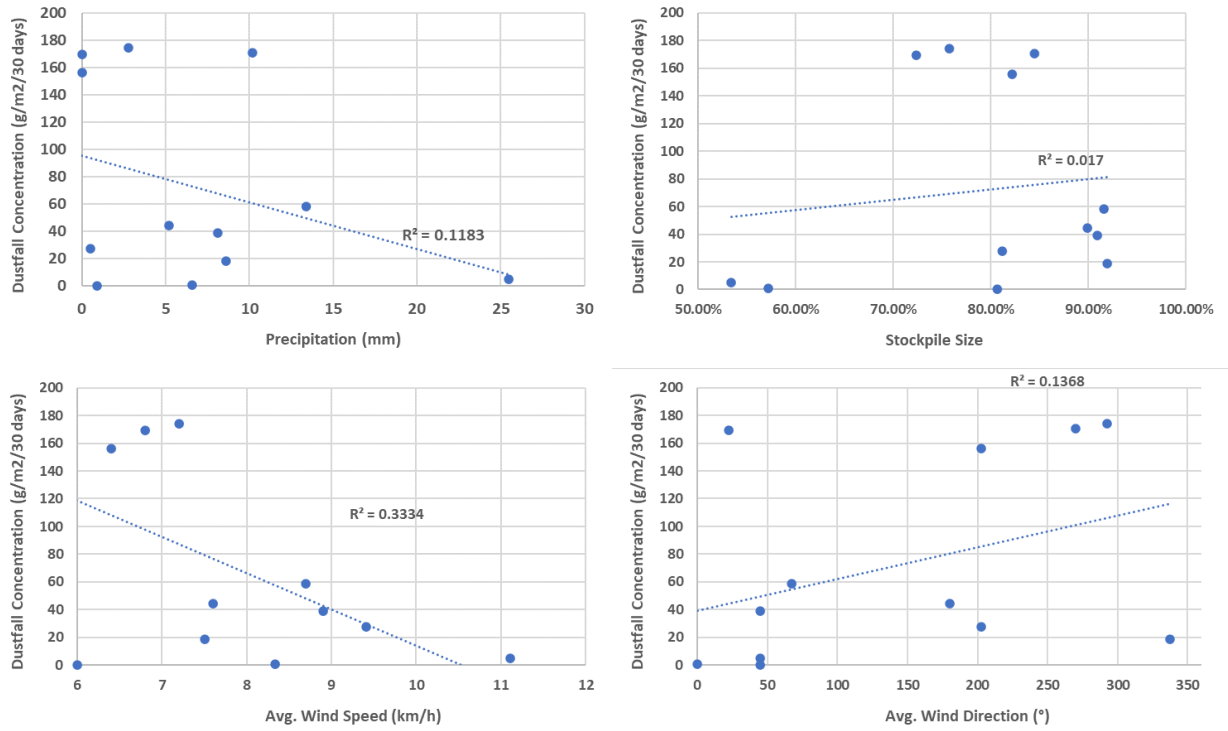

Figure 6-11. SPP1 Dustfall Concentrations vs. Stockpile Size and Weather Data

6.4 PASSIVE SO_2 AND NO_2

The Tait Road and Gallinger Road Stations collected three (3) valid samples out of a possible three (3) sampling opportunities (100% valid data) in this quarter.

There are no MECP standards, guidelines, or Ontario AAQCs for SO_2 or NO_2 for a 30-day averaging period. Instead, the 30-day measured average SO_2 or NO_2 concentrations allow for future analysis of trends in the ambient concentrations, identification of notable increases, and comparison with dispersion modelling results.

For NO_2, the monthly results are compared against Ontario's 24-hour NO_2 AAQC (200 µg/m^3) converted to an equivalent 30-day average (78 µg/m^3) using the methodology outlined in Table 7-1 of the MECP's "Guideline A-10: Procedure for Preparing an Emission Summary and Dispersion Modelling Report" (2019).

For SO_2, the monthly results are compared against Alberta's 30-day SO_2 Ambient Air Quality Objective (AAQO) of 30 µg/m^3 (Alberta Environment and Parks, 2019).

For this quarter, the arithmetic mean SO_2 concentration was 0.65 µg/m^3 at both the Tait Road and Gallinger Road Stations. The arithmetic mean NO_2 concentrations were 1.88 µg/m^3 and 0.63 µg/m^3 at the Tait Road and Gallinger Road Stations, respectively.

The maximum monthly concentration of SO_2 was 1.05 µg/m^3 at the Tait Road Station in June and 1.31 µg/m^3 at the Gallinger Road Station in May. The maximum monthly concentration of NO_2

was 2.63 µg/m^3 at the Tait Road Station in April and 0.94 µg/m^3 at the Gallinger Road Station in May.

Laboratory data is provided as the concentration of the contaminant in the sample, in parts per billion by volume. This value is then converted to the appropriate units for reporting using the equation seen below:

$$Concentration\ (\mu g/m^3) = Lab\ Concentration\ (ppbv) \times \frac{Molecular\ Weight}{Molar\ Volume}$$

In this quarter, there were no samples that exceeded the converted 24-hour NO_2 Ontario AAQC (78 µg/m^3), and no samples that exceeded the 30-day Alberta SO_2 AAQO (30 µg/m^3).

Data is summarized for SO_2 and NO_2 in **Table 6-7**. Sample data from all runs and further statistical analyses are presented in **Appendix A-4** and Error! Reference source not found..

Table 6-7: Summary Statistics for SO_2 and NO_2. Concentrations presented in µg/m^3.

	Tait Road Station		Gallinger Road Station	
	SO_2	**NO_2**	**SO_2**	**NO_2**
Number of Valid Samples	3	3	3	3
% Valid Data	100%	100%	100%	100%
Arithmetic Mean	0.65	1.88	0.65	0.63
Monthly Maximum	1.05	2.63	1.31	0.94
Limit	30	78	30	78
Samples > Limit	0	0	0	0
MDL	0.26	0.19	0.26	0.19
Samples < MDL	1	0	1	0

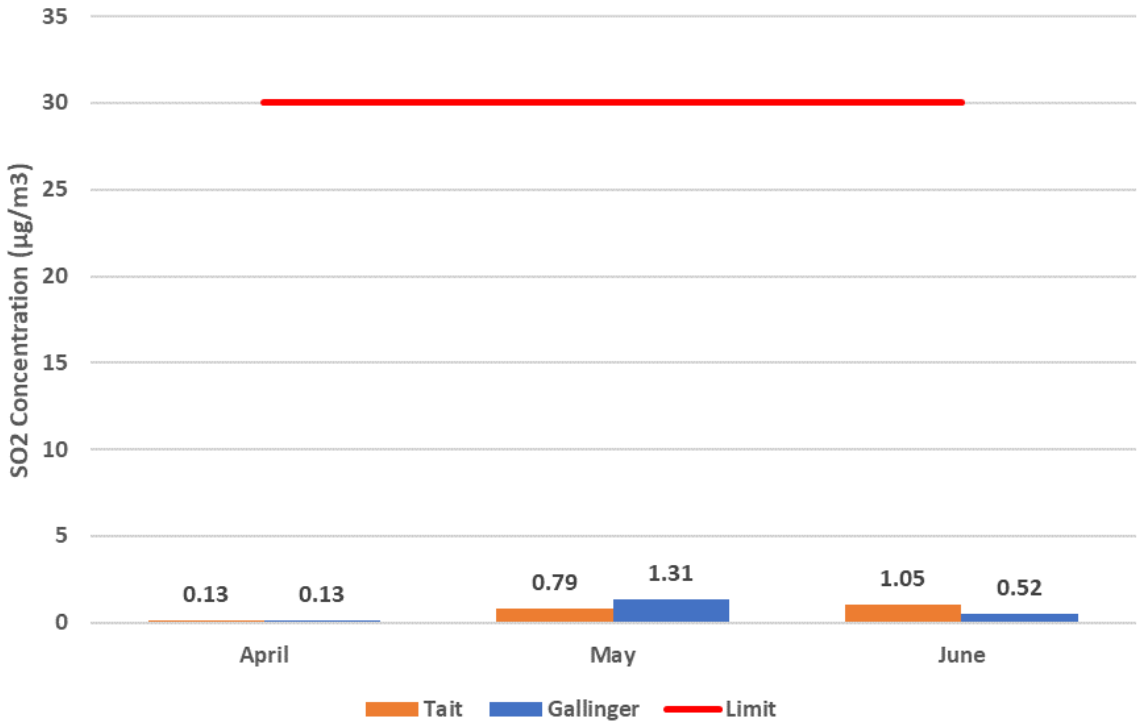

Figure 6-12. SO_2 Monitoring Results

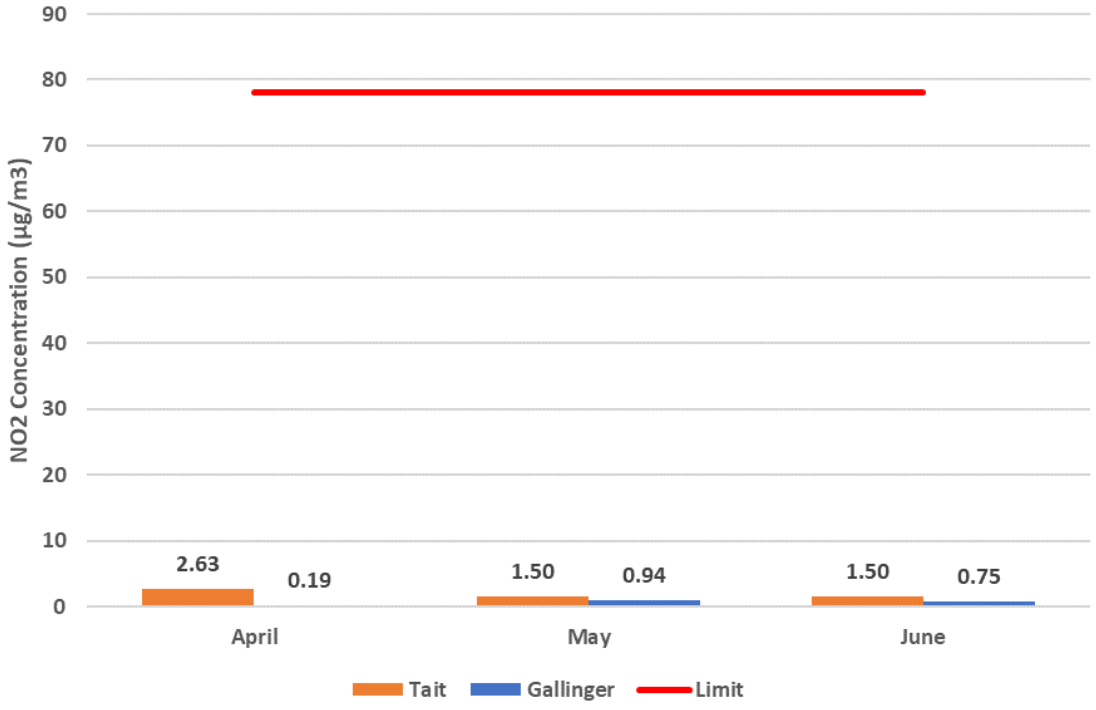

Figure 6-13. NO_2 Monitoring Results

Section 7. MITIGATION MEASURES

A series of mitigation steps were taken in Q2 of 2020 to remedy issues with variable flow rates through the Hi-Vol TSP Samplers leading to invalid samples. In Q2 of 2021, there were seven (7) invalid TSP samples.

In Q1 of 2021, ten (10) of the thirteen (13) total dustfall samples at the SPP1 Station were in exceedance of the AAQC. Similarly, in Q2 of 2021, six (6) of the eight (8) samples were in exceedance. However, since this Station is located within the property boundary and not considered a point of impingement, no mitigation measures have been implemented at this time.

Section 8. CONCLUSION

The Rainy River Mine Ambient Air Quality Monitoring Program was conducted in the second quarter of 2021 in accordance with the Site's Amended Environmental Compliance Approval (ECA) Number 0412-A2LR4V and the MECP Program Approval Letter.

Samples were taken every sixth (6th) day for total suspended particulate matter (TSP), metals, and respirable particulate matter ($PM_{2.5}$). Samples were taken monthly for total dustfall, sulphur dioxide (SO_2), and nitrogen dioxide (NO_2).

These samples were sent out for analysis in accordance with the methods prescribed in the Operations Manual.

There were four (4) exceedances of the total dustfall limit at the Tait Road and Northwest Stations in May and June.

There were no exceedances of the TSP, metal, $PM_{2.5}$, NO_2, or SO_2 limits.

Section 9. References

Alberta Environment and Parks. (2019, January). *Alberta Ambient Air Quality Objectives and Guidelines Summary.* Retrieved from Ambient Air Quality Objectives: https://open.alberta.ca/dataset/0d2ad470-117e-410f-ba4f-aa352cb02d4d/resource/4ddd8097-6787-43f3-bb4a-908e20f5e8f1/download/aaqo-summary-jan2019.pdf

American Society for Testing and Materials International. (2017). *ASTM D1739-98(2017), Standard Test Method for Collection and Measurement of Dustfall (Settleable Particulate Matter).* Retrieved from Standards Products: https://www.astm.org/Standards/D1739.htm

Bari, M., Curran, R. T., & Kindzierski, W. B. (2015). Field performance evaluation of Maxxam passive samplers for regional monitoring of ambient SO2, NO2 and O3 concentrations in Alberta, Canada. *Atmospheric Environment, 114*, 39-47.

British Columbia Ministry of the Environment. (2020). *Section G: Air Constituents - Inorganic.* Retrieved from B.C. Environmental Laboratory Manual: https://www2.gov.bc.ca/assets/gov/environment/research-monitoring-and-reporting/monitoring/emre/lab-manual/section-g-2020.pdf

Government of Ontario. (2019, January 1). *O. Reg. 419/05: Air Pollution - Local Air Quality*. Retrieved from Ontario Laws: https://www.ontario.ca/laws/regulation/050419

Ontario Ministry of the Environment, Conservation and Parks. (2019, May 14). *Operations manual for air quality monitoring in Ontario*. Retrieved from Ontario.ca: https://www.ontario.ca/document/operations-manual-air-quality-monitoring-ontario-0

Ontario Ministry of the Environment, Conservation and Parks. (2019, May 1). *Procedure for Preparing an Emission Summary and Dispersion Modelling Report.* Retrieved from Guideline A-10: https://files.ontario.ca/books/20180309_moecc_65_emission_aoda_en-aoda.pdf

Ontario Ministry of the Environment, Conservation and Parks. (2020, May 1). *Ambient Air Quality Criteria.* Retrieved from Ontario's Ambient Air Quality Criteria: https://files.ontario.ca/mecp-ambient-air-quality-criteria-list-en-2020-05-01.pdf

U.S. EPA. (1998, January). *Method 6020A: Inductively Coupled Plasma - Mass Spectrometry.* Retrieved from U.S. Environmental Protection Agency: https://19january2017snapshot.epa.gov/sites/production/files/2015-07/documents/epa-6020a.pdf

U.S. EPA. (1999, June). *Compendium of Methods for the Determination of Inorganic Compounds in Ambient Air: Compendium Method IO-3.1.* Retrieved from U.S. Environmental Protection Agency: https://www.epa.gov/sites/production/files/2015-07/documents/epa-io-3.1.pdf

U.S. EPA. (1999, June). *Compendium of Methods for the Determination of Inorganic Compounds in Ambient Air: Compendium Method IO-3.5.* Retrieved from U.S. Environmental

Protection Agency: https://www.epa.gov/sites/production/files/2015-07/documents/epa-io-3.5.pdf

U.S. EPA. (2016, January). *Quality Assurance Guidance Document 2.12: Monitoring PM2.5 in Ambient Air Using Designated Reference or Class I Equivalent Methods.* Retrieved from U.S. Environmental Protection Agency: https://www3.epa.gov/ttnamti1/files/ambient/pm25/qa/m212.pdf

United States Environmental Protection Agency. (2020, November). *2021 EPA Sampling Schedule.* Retrieved from Sampling Schedule Calendar: https://www.epa.gov/sites/production/files/2020-11/documents/2021_sampling_schedule.pdf

Section 10. CLOSING

The *Rainy River Mine Ambient Air Quality Monitoring Program Second Quarter 2021 Report* was prepared by New Gold Inc. The quality of information, conclusions, and estimates contained herein are based on:

- Information available at the time of preparation;
- Data supplied by outside sources; and
- The assumptions, conditions, and qualifications set forth in this document.

If you require further information regarding the above, or the Mine in general, please contact the undersigned at 1(807) 234-8170.

Sincerely,

New Gold Inc.

Rainy River Mine

Prepared By:

Garnet Cornell

Environment Superintendent

APPENDIX A:
SAMPLING RESULTS

Appendix A-1 TSP, Metals, and $PM_{2.5}$ Sampling Results

Appendix A-2 Total Dustfall Sampling Results

Appendix A-3 Dustfall Metals Sampling Results

Appendix A-4 SO_2 and NO_2 Passive Sampling Results

APPENDIX A-1:

TSP, METALS, AND $PM_{2.5}$ SAMPLING RESULTS

Tait Road Station Monitoring Results
(concentrations expressed in µg/m³)

Date	TSP	As	Cd	Cr	Co	Cu	Fe	Pb	Mn	Ni	Se	V	Zn	$PM_{2.5}$
April 4	79.47	*9.54E-04*	*6.36E-04*	6.17E-03	*6.36E-04*	6.68E-02	1.72	4.01E-03	5.49E-02	3.69E-03	*3.18E-03*	*1.59E-03*	9.54E-04	1.58
April 10	13.57	*9.21E-04*	*6.14E-04*	*1.53E-03*	*6.14E-04*	9.70E-02	3.62E-01	*9.21E-04*	1.12E-02	*9.21E-04*	*3.07E-03*	*1.53E-03*	9.21E-04	*0.31*
April 16	----	----	----	----	----	----	----	----	----	----	----	----	----	2.21
April 22	83.64	*9.80E-04*	*6.53E-04*	4.25E-03	1.63E-03	7.78E-02	2.74	2.22E-03	6.99E-02	3.53E-03	*3.27E-03*	4.70E-03	9.80E-04	4.20
April 28	33.65	*9.30E-04*	*6.20E-04*	*1.55E-03*	*6.20E-04*	8.30E-02	7.06E-01	*9.30E-04*	1.92E-02	*9.30E-04*	*3.10E-03*	*1.55E-03*	9.30E-04	6.70
May 4	28.76	*9.14E-04*	*6.09E-04*	*1.52E-03*	*6.09E-04*	8.04E-02	5.92E-01	*9.14E-04*	2.11E-02	*9.14E-04*	*3.05E-03*	*1.52E-03*	9.14E-04	*0.31*
May 10	44.85	*9.20E-04*	*6.14E-04*	3.44E-03	*6.14E-04*	7.36E-02	1.19	1.84E-03	3.45E-02	2.09E-03	*3.07E-03*	*1.53E-03*	9.20E-04	0.92
May 16	65.63	*9.65E-04*	*6.43E-04*	*1.61E-03*	*6.43E-04*	5.44E-02	1.06	2.19E-03	3.59E-02	*9.65E-04*	*3.22E-03*	*1.61E-03*	9.65E-04	5.67
May 22	51.56	*9.32E-04*	*6.21E-04*	*1.55E-03*	*6.21E-04*	9.51E-02	8.57E-01	*9.32E-04*	2.14E-02	*9.32E-04*	*3.11E-03*	*1.55E-03*	9.32E-04	4.50
May 28	30.61	*9.45E-04*	*6.30E-04*	*1.57E-03*	*6.30E-04*	7.62E-02	6.99E-01	*9.45E-04*	1.63E-02	*9.45E-04*	*3.15E-03*	*1.57E-03*	9.45E-04	2.33
June 3	41.27	*9.42E-04*	*6.28E-04*	*1.57E-03*	*6.28E-04*	8.29E-02	9.30E-01	*9.42E-04*	2.76E-02	*9.42E-04*	*3.14E-03*	*1.57E-03*	1.36E-02	6.09
June 9	73.64	*1.01E-03*	*6.76E-04*	*1.69E-03*	*6.76E-04*	6.30E-02	1.82E+00	*1.01E-03*	4.05E-02	2.36E-03	*3.38E-03*	*1.69E-03*	1.20E-02	5.79
June 15	81.32	*1.02E-03*	*6.78E-04*	3.93E-03	*6.78E-04*	9.15E-02	1.98E+00	4.88E-03	6.25E-02	2.44E-03	*3.39E-03*	3.73E-03	4.91E-02	5.42
June 21	31.14	*9.69E-04*	*6.46E-04*	*1.62E-03*	*6.46E-04*	6.14E-02	5.52E-01	*9.69E-04*	1.44E-02	*9.69E-04*	*3.23E-03*	*1.62E-03*	8.14E-03	0.83
June 27	19.71	*9.57E-04*	*6.38E-04*	*1.59E-03*	*6.38E-04*	5.22E-02	1.93E-01	*9.57E-04*	6.31E-03	*9.57E-04*	*3.19E-03*	*1.59E-03*	5.55E-03	5.66
No. Valid Samples	14	14	14	14	14	14	14	14	14	14	14	14	14	15
% Valid Data	93%	93%	93%	93%	93%	93%	93%	93%	93%	93%	93%	93%	93%	100%
Arithmetic Mean	48.49	9.54E-04	6.36E-04	2.40E-03	7.06E-04	7.54E-02	1.10	1.69E-03	3.11E-02	1.61E-03	3.18E-03	1.95E-03	1.81E-02	3.50
Geometric Mean	42.44	9.54E-04	6.36E-04	2.11E-03	6.79E-04	7.41E-02	8.89E-01	1.40E-03	2.54E-02	1.38E-03	3.18E-03	1.81E-03	1.51E-02	2.39
Max Sample	83.64	1.02E-03	6.78E-04	6.17E-03	1.63E-03	9.70E-02	2.74	4.88E-03	6.99E-02	3.69E-03	3.39E-03	4.70E-03	4.91E-02	6.70
Min Sample	13.57	9.14E-04	6.09E-04	1.52E-03	6.09E-04	5.22E-02	1.93E-01	9.14E-04	6.31E-03	9.14E-04	3.05E-03	1.52E-03	5.55E-03	*0.31*
April Max	83.64	9.80E-04	6.53E-04	6.17E-03	1.63E-03	9.70E-02	2.74	4.01E-03	6.99E-02	3.69E-03	3.27E-03	4.70E-03	4.29E-02	6.70
May Max	65.63	9.65E-04	6.43E-04	3.44E-03	6.43E-04	9.51E-02	1.19	2.19E-03	3.59E-02	2.09E-03	3.22E-03	1.61E-03	2.11E-02	5.67
June Max	81.32	1.02E-03	6.78E-04	3.93E-03	6.78E-04	9.15E-02	1.98	4.88E-03	6.25E-02	2.44E-03	3.39E-03	3.73E-03	4.91E-02	6.09
90th Percentile	80.76	1.00E-03	6.69E-04	4.15E-03	6.77E-04	9.40E-02	1.93	3.47E-03	6.03E-02	3.20E-03	3.34E-03	3.12E-03	3.64E-02	5.97
95th Percentile	82.13	1.01E-03	6.76E-04	4.92E-03	1.01E-03	9.57E-02	2.25	4.31E-03	6.51E-02	3.58E-03	3.38E-03	4.07E-03	4.51E-02	6.27
Comparison Limit	120	0.3	0.025	0.5	0.1	50	4	0.5	0.4	0.2	10	2	120	27
No. > Limit	0	0	0	0	0	0	0	0	0	0	0	0	0	0
MDL (µg)	2,300	3	2	5	2	4	20	3	1	3	10	5	5	15
No. < MDL	0	14	14	10	13	0	0	9	0	9	14	12	0	2

All non-detectable results (i.e., < MDL) are reported as ½ MDL and are denoted by italics and underlining.
N/A: Not applicable
----: Invalid sample

Gallinger Road Station Monitoring Results
(concentrations expressed in µg/m³)

Date	TSP	As	Cd	Cr	Co	Cu	Fe	Pb	Mn	Ni	Se	V	Zn	$PM_{2.5}$
April 4	22.86	*9.91E-04*	*6.61E-04*	3.90E-03	*6.61E-04*	9.12E-02	3.72E-01	*9.91E-04*	1.05E-02	*9.91E-04*	*3.30E-03*	*1.65E-03*	4.36E-03	3.29
April 10	6.98	*1.05E-03*	*6.98E-04*	*1.75E-03*	*6.98E-04*	1.55E-01	9.78E-02	*1.05E-03*	2.37E-03	*1.05E-03*	*3.49E-03*	*1.75E-03*	*1.75E-03*	*0.31*
April 16	7.38	*1.24E-03*	*8.29E-04*	*2.07E-03*	*8.29E-04*	1.83E-01	1.36E-01	*1.24E-03*	2.74E-03	*1.24E-03*	*4.15E-03*	*2.07E-03*	*2.07E-03*	*0.31*
April 22	----	----	----	----	----	----	----	----	----	----	----	----	----	----
April 28	22.43	*9.14E-04*	*6.09E-04*	*1.52E-03*	*6.09E-04*	1.13E-01	3.87E-01	*9.14E-04*	1.24E-02	*9.14E-04*	*3.05E-03*	*1.52E-03*	8.71E-03	*0.31*
May 4	5.93	*8.64E-04*	*5.76E-04*	*1.44E-03*	*5.76E-04*	1.29E-01	1.27E-01	*8.64E-04*	2.88E-03	*8.64E-04*	*2.88E-03*	*1.44E-03*	3.28E-03	1.25
May 10	74.59	*9.40E-04*	*6.27E-04*	*1.57E-03*	*6.27E-04*	1.29E-01	1.62	*9.40E-04*	4.71E-02	1.94E-03	*3.13E-03*	*1.57E-03*	1.10E-02	*0.31*
May 16	48.74	*9.77E-04*	*6.52E-04*	*1.63E-03*	*6.52E-04*	9.38E-02	6.91E-01	*9.77E-04*	2.22E-02	*9.77E-04*	*3.26E-03*	*1.63E-03*	1.25E-02	4.37
May 22	32.80	*1.10E-03*	*7.34E-04*	*1.83E-03*	*7.34E-04*	1.52E-01	2.52E-01	*1.10E-03*	8.07E-03	*1.10E-03*	*3.67E-03*	*1.83E-03*	2.99E-02	3.66
May 28	31.21	*9.65E-04*	*6.43E-04*	*1.61E-03*	*6.43E-04*	1.27E-01	7.21E-01	*9.65E-04*	1.81E-02	*9.65E-04*	*3.22E-03*	*1.61E-03*	1.07E-02	1.67
June 3	38.90	*9.34E-04*	*6.22E-04*	*1.56E-03*	*6.22E-04*	1.10E-01	6.78E-01	*9.34E-04*	2.35E-02	*9.34E-04*	*3.11E-03*	*1.56E-03*	1.06E-02	3.62
June 9	54.50	*9.75E-04*	*6.50E-04*	*1.63E-03*	*6.50E-04*	1.13E-01	9.69E-01	*9.75E-04*	2.76E-02	*9.75E-04*	*3.25E-03*	*1.63E-03*	1.20E-02	5.29
June 15	57.61	*9.98E-04*	*6.65E-04*	*1.66E-03*	*6.65E-04*	1.02E-01	1.04E+00	*9.98E-04*	3.05E-02	*9.98E-04*	*3.33E-03*	*1.66E-03*	1.10E-02	*0.31*
June 21	34.80	*9.18E-04*	*6.12E-04*	*1.53E-03*	*6.12E-04*	1.02E-01	5.89E-01	*9.18E-04*	1.82E-02	*9.18E-04*	*3.06E-03*	*1.53E-03*	1.86E-02	*0.31*
June 27	56.69	*9.81E-04*	*6.54E-04*	*1.63E-03*	*6.54E-04*	9.35E-02	7.98E-01	*9.81E-04*	2.46E-02	*9.81E-04*	*3.27E-03*	*1.63E-03*	2.18E-02	3.91
No. Valid Samples	11	11	11	11	11	11	11	11	11	11	11	11	11	14
% Valid Data	73%	73%	73%	73%	73%	73%	73%	73%	73%	73%	73%	73%	73%	93%
Arithmetic Mean	35.39	9.89E-04	6.59E-04	1.81E-03	6.59E-04	1.21E-01	6.05E-01	9.89E-04	1.79E-02	1.06E-03	3.30E-03	1.65E-03	1.13E-02	2.07
Geometric Mean	27.49	9.85E-04	6.57E-04	1.75E-03	6.57E-04	1.18E-01	4.54E-01	9.85E-04	1.28E-02	1.04E-03	3.28E-03	1.64E-03	8.56E-03	1.16
Max Sample	74.59	1.24E-03	8.29E-04	3.90E-03	8.29E-04	1.83E-01	1.62	1.24E-03	4.71E-02	1.94E-03	4.15E-03	2.07E-03	2.99E-02	5.29
Min Sample	5.93	8.64E-04	5.76E-04	1.44E-03	5.76E-04	9.12E-02	9.78E-02	8.64E-04	2.37E-03	8.64E-04	2.88E-03	1.44E-03	1.75E-03	*0.31*
April Max	22.86	1.24E-03	8.29E-04	3.90E-03	8.29E-04	1.83E-01	3.87E-01	1.24E-03	1.24E-02	1.24E-03	4.15E-03	2.07E-03	8.71E-03	3.29
May Max	74.59	1.10E-03	7.34E-04	1.83E-03	7.34E-04	1.52E-01	1.62	1.10E-03	4.71E-02	1.94E-03	3.67E-03	1.83E-03	2.99E-02	4.37
June Max	57.61	9.98E-04	6.65E-04	1.66E-03	6.65E-04	1.13E-01	1.04	9.98E-04	3.05E-02	9.98E-04	3.33E-03	1.66E-03	2.18E-02	5.29
90th Percentile	57.33	1.08E-03	7.23E-04	2.00E-03	7.23E-04	1.54E-01	1.02	1.08E-03	2.96E-02	1.20E-03	3.62E-03	1.81E-03	2.08E-02	4.23
95th Percentile	63.55	1.15E-03	7.67E-04	2.71E-03	7.67E-04	1.65E-01	1.24	1.15E-03	3.63E-02	1.49E-03	3.84E-03	1.92E-03	2.46E-02	4.69
Comparison Limit	120	0.3	0.025	0.5	0.1	50	4	0.5	0.4	0.2	10	2	120	27
No. > Limit	0	0	0	0	0	0	0	0	0	0	0	0	0	0
MDL (µg)	2,300	3	2	5	2	4	20	3	1	3	10	5	5	15
No. < MDL	0	14	14	13	14	0	0	13	0	13	14	14	2	6

All non-detectable results (i.e., < MDL) are reported as ½ MDL and are denoted by italics and underlining.
N/A: Not applicable
----: Invalid sample

Northwest Station Monitoring Results
(concentrations expressed in µg/m^3)

Date	TSP	As	Cd	Cr	Co	Cu	Fe	Pb	Mn	Ni	Se	V	Zn	$PM_{2.5}$
April 4	69.23	*9.11E-04*	*6.07E-04*	4.49E-03	*6.07E-04*	5.57E-02	1.90	4.74E-03	8.14E-02	4.19E-03	*3.04E-03*	3.52E-03	4.81E-02	4.12
April 10	8.32	*1.01E-03*	*6.71E-04*	*1.68E-03*	*6.71E-04*	4.93E-02	1.24E-01	*1.01E-03*	3.36E-03	*1.01E-03*	*3.36E-03*	*1.68E-03*	*1.68E-03*	1.41
April 16	7.97	*2.06E-03*	*1.37E-03*	*3.44E-03*	*1.37E-03*	4.47E-02	1.83E-01	*2.06E-03*	5.22E-03	*2.06E-03*	*6.87E-03*	*3.44E-03*	1.31E-02	*0.31*
April 22	32.24	*9.34E-04*	*6.22E-04*	*1.56E-03*	*6.22E-04*	3.64E-02	5.83E-01	*9.34E-04*	1.92E-02	*9.34E-04*	*3.11E-03*	*1.56E-03*	9.27E-03	2.08
April 28	21.39	*8.99E-04*	*5.99E-04*	*1.50E-03*	*5.99E-04*	5.93E-02	4.40E-01	*8.99E-04*	1.27E-02	*8.99E-04*	*3.00E-03*	*1.50E-03*	9.83E-03	3.16
May 4	5.89	*1.00E-03*	*6.70E-04*	*1.67E-03*	*6.70E-04*	1.50E-01	9.98E-02	*1.00E-03*	2.48E-03	*1.00E-03*	*3.35E-03*	*1.67E-03*	4.02E-03	0.96
May 10	7.66	*9.34E-04*	*6.23E-04*	*1.56E-03*	*6.23E-04*	1.63E-01	1.40E-01	*9.34E-04*	3.80E-03	*9.34E-04*	*3.11E-03*	*1.56E-03*	4.67E-03	0.62
May 16	57.13	*9.76E-04*	*6.51E-04*	*1.63E-03*	*6.51E-04*	1.27E-01	8.65E-01	*9.76E-04*	2.71E-02	*9.76E-04*	*3.25E-03*	*1.63E-03*	1.14E-02	5.03
May 22	27.40	*9.13E-04*	*6.09E-04*	*1.52E-03*	*6.09E-04*	1.23E-01	2.62E-01	*9.13E-04*	8.28E-03	*9.13E-04*	*3.04E-03*	*1.52E-03*	6.45E-03	4.29
May 28	25.31	*9.68E-04*	*6.46E-04*	*1.61E-03*	*6.46E-04*	1.47E-01	5.06E-01	*9.68E-04*	1.43E-02	*9.68E-04*	*3.23E-03*	*1.61E-03*	8.72E-03	0.79
June 3	25.50	*1.00E-03*	*6.69E-04*	*1.67E-03*	*6.69E-04*	1.83E-01	3.95E-01	*1.00E-03*	1.59E-02	*1.00E-03*	*3.35E-03*	*1.67E-03*	6.96E-03	4.91
June 9	48.12	*8.84E-04*	*5.89E-04*	*1.47E-03*	*5.89E-04*	1.12E-01	9.84E-01	1.94E-03	3.00E-02	*8.84E-04*	*2.95E-03*	*1.47E-03*	1.99E-02	6.74
June 15	31.32	*7.42E-04*	*4.95E-04*	*1.24E-03*	*4.95E-04*	9.05E-02	5.59E-01	*7.42E-04*	1.53E-02	*7.42E-04*	*2.47E-03*	*1.24E-03*	8.71E-03	*0.31*
June 21	18.15	*8.81E-04*	*5.87E-04*	*1.47E-03*	*5.87E-04*	1.06E-01	1.83E-01	*8.81E-04*	4.46E-03	*8.81E-04*	*2.94E-03*	*1.47E-03*	*1.47E-03*	*0.31*
June 27	15.22	*9.32E-04*	*6.21E-04*	*1.55E-03*	*6.21E-04*	1.39E-01	8.51E-02	*9.32E-04*	4.16E-03	*9.32E-04*	*3.11E-03*	*1.55E-03*	5.34E-03	3.33
No. Valid Samples	13	13	13	13	13	13	13	13	13	13	13	13	13	15
% Valid Data	87%	87%	87%	87%	87%	87%	87%	87%	87%	87%	87%	87%	87%	100%
Arithmetic Mean	26.72	1.00E-03	6.69E-04	1.87E-03	6.69E-04	1.06E-01	4.87E-01	1.33E-03	1.65E-02	1.22E-03	3.34E-03	1.81E-03	1.06E-02	2.56
Geometric Mean	20.83	9.76E-04	6.51E-04	1.75E-03	6.51E-04	9.42E-02	3.30E-01	1.15E-03	1.02E-02	1.08E-03	3.25E-03	1.72E-03	7.40E-03	1.61
Max Sample	69.23	2.06E-03	1.37E-03	4.49E-03	1.37E-03	1.83E-01	1.90	4.74E-03	8.14E-02	4.19E-03	6.87E-03	3.52E-03	4.81E-02	6.74
Min Sample	5.89	7.42E-04	4.95E-04	1.24E-03	4.95E-04	3.64E-02	8.51E-02	7.42E-04	2.48E-03	7.42E-04	2.47E-03	1.24E-03	1.47E-03	*0.31*
April Max	69.23	2.06E-03	1.37E-03	4.49E-03	1.37E-03	5.93E-02	1.90	4.74E-03	8.14E-02	4.19E-03	6.87E-03	3.52E-03	4.81E-02	4.12
May Max	57.13	1.00E-03	6.70E-04	1.67E-03	6.70E-04	1.63E-01	8.65E-01	1.00E-03	2.71E-02	1.00E-03	3.35E-03	1.67E-03	1.14E-02	5.03
June Max	48.12	1.00E-03	6.69E-04	1.67E-03	6.69E-04	1.83E-01	9.84E-01	1.94E-03	3.00E-02	1.00E-03	3.35E-03	1.67E-03	1.99E-02	6.74
90th Percentile	53.53	1.01E-03	6.71E-04	2.73E-03	6.71E-04	1.58E-01	9.36E-01	2.01E-03	2.88E-02	1.64E-03	3.35E-03	2.73E-03	1.72E-02	4.98
95th Percentile	60.76	1.32E-03	8.82E-04	3.75E-03	8.82E-04	1.69E-01	1.26	2.86E-03	4.54E-02	2.70E-03	4.41E-03	3.46E-03	2.84E-02	5.54
Comparison Limit	120	0.3	0.025	0.5	0.1	50	4	0.5	0.4	0.2	10	2	120	27
No. > Limit	0	0	0	0	0	0	0	0	0	0	0	0	0	0
MDL (µg)	2,300	3	2	5	2	4	20	3	1	3	10	5	5	15
No. < MDL	0	15	15	14	15	0	0	13	0	14	15	14	2	3

All non-detectable results (i.e., < MDL) are reported as ½ MDL and are denoted by italics and underlining.
N/A: Not applicable
----: Invalid sample

APPENDIX A-2:

TOTAL DUSTFALL SAMPLING RESULTS

Tait Road Station Monitoring Results (concentrations expressed in g/m²/30 days)						
Month	**No. Exposure Days**	**Insoluble Dustfall**	**Soluble Dustfall**	**Total Dustfall**	**Fixed Dustfall**	**Volatile Dustfall**
April	30	4.08	1.26	5.34	3.24	2.10
May	31	5.46	4.89	10.35	3.93	6.42
June	30	8.52	7.44	15.96	3.30	12.66
			No. Valid Samples	3	3	3
			% Valid Data	100%	100%	100%
			Arithmetic Mean	10.55	3.49	7.06
			Max Monthly Concentration	15.96	3.93	12.66
			Min Monthly Concentration	5.34	3.24	2.10
			Comparison Limit	7	-	-
			No. > Limit	2	-	-
			MDL	0.3	0.3	0.3
			No. < MDL	0	0	0

Gallinger Road Station Monitoring Results (concentrations expressed in g/m²/30 days)						
Month	**No. Exposure Days**	**Insoluble Dustfall**	**Soluble Dustfall**	**Total Dustfall**	**Fixed Dustfall**	**Volatile Dustfall**
April	30	0.60	*0.15*	0.84	*0.15*	0.57
May	31	2.55	1.44	3.99	2.31	1.68
June	30	4.56	1.89	6.48	4.44	2.01
			No. Valid Samples	3	3	3
			% Valid Data	100%	100%	100%
			Arithmetic Mean	3.77	2.30	1.42
			Max Monthly Concentration	6.48	4.44	2.01
			Min Monthly Concentration	0.84	*0.15*	0.57
			Comparison Limit	7	-	-
			No. > Limit	0	-	-
			MDL	0.3	0.3	0.3
			No. < MDL	0	1	0

Northwest Station Monitoring Results (concentrations expressed in g/m²/30 days)						
Month	**No. Exposure Days**	**Insoluble Dustfall**	**Soluble Dustfall**	**Total Dustfall**	**Fixed Dustfall**	**Volatile Dustfall**
April	30	3.42	1.59	5.01	2.88	2.16
May	31	4.68	4.05	9.18	1.74	7.44
June	30	2.04	9.36	11.40	0.99	10.38
			No. Valid Samples	3	3	3
			% Valid Data	100%	100%	100%
			Arithmetic Mean	8.53	1.87	6.66
			Max Monthly Concentration	11.40	2.88	10.38
			Min Monthly Concentration	5.01	0.99	2.16
			Comparison Limit	7	-	-
			No. > Limit	2	-	-
			MDL	0.3	0.3	0.3
			No. < MDL	0	0	0

NOP1 Station Monitoring Results (concentrations expressed in g/m²/30 days)				
Month	**No. Exposure Days**	**Insoluble Dustfall**	**Soluble Dustfall**	**Total Dustfall**
April	30	10.89	1.02	11.88
May	31	5.88	1.62	7.50
June	30	49.80	19.77	69.60
			No. Valid Samples	3
			% Valid Data	100%
			Arithmetic Mean	29.66
			Max Monthly Concentration	69.60
			Min Monthly Concentration	7.50
			Comparison Limit	7
			No. > Limit	3
			MDL	0.3
			No. < MDL	0

WCP1 Station Monitoring Results (concentrations expressed in g/m²/30 days)				
Month	**No. Exposure Days**	**Insoluble Dustfall**	**Soluble Dustfall**	**Total Dustfall**
April	30	6.18	7.26	13.44
May	31	56.70	78.00	134.40
June	30	41.10	72.30	113.40
			No. Valid Samples	3
			% Valid Data	100%
			Arithmetic Mean	87.08
			Max Monthly Concentration	134.40
			Min Monthly Concentration	13.44
			Comparison Limit	7
			No. > Limit	3
			MDL	0.3
			No. < MDL	0

GH1 Station Monitoring Results (concentrations expressed in g/m²/30 days)				
Month	**No. Exposure Days**	**Insoluble Dustfall**	**Soluble Dustfall**	**Total Dustfall**
April	30	2.01	2.55	4.56
May	31	3.15	8.28	11.46
June	30	9.81	16.29	26.10
			No. Valid Samples	3
			% Valid Data	100%
			Arithmetic Mean	14.04
			Max Monthly Concentration	26.10
			Min Monthly Concentration	4.56
			Comparison Limit	7
			No. > Limit	2
			MDL	0.3
			No. < MDL	0

CP1 Station Monitoring Results (concentrations expressed in g/m²/30 days)				
Month	**No. Exposure Days**	**Insoluble Dustfall**	**Soluble Dustfall**	**Total Dustfall**
April	30	3.00	2.46	5.46
May	31	15.27	12.12	27.39
June	30	4.47	69.30	73.80
			No. Valid Samples	3
			% Valid Data	100%
			Arithmetic Mean	35.55
			Max Monthly Concentration	73.80
			Min Monthly Concentration	5.46
			Comparison Limit	7
			No. > Limit	2
			MDL	0.3
			No. < MDL	0

newgold Rainy River

SPP1 Station Monitoring Results (concentrations expressed in g/m^2/30 days)				
Month	**No. Exposure Days**	**Insoluble Dustfall**	**Soluble Dustfall**	**Total Dustfall**
April 7	7	3.69	*0.65*	4.86
April 14	7	*0.65*	*0.65*	*0.65*
April 21	7	13.62	13.89	27.51
April 28	7	9.66	8.88	18.54
May 5	7	131.40	38.40	169.50
May 12	7	106.80	49.20	156.00
May 19	7	35.10	23.34	58.50
May 26	7	18.09	26.22	44.40
June 2	7	----	----	----
June 9	7	19.23	19.89	39.00
June 16	7	100.20	74.10	174.30
June 23	7	61.50	109.20	170.70
June 30	7	216.30	175.80	393.00

No. Valid Samples	12
% Valid Data	92%
Arithmetic Mean	104.75
Max Concentration	393.00
Min Concentration	*0.65*
Comparison Limit	7
No. > Limit	10
MDL	1.29
No. < MDL	1

APPENDIX A-3:

DUSTFALL METALS SAMPLING RESULTS

newgold Rainy River

SPP1 Station Monitoring Results
(concentrations expressed in g/m^2/30 days)

Metal	April 7	April 14	April 21	April 28	May 5	May 12	May 19	May 26	June 2	June 9	June 16	June 23	June 30	Max
Aluminum	2.86E-02	3.21E-03	4.92E-02	5.01E-02	5.70E-01	3.87E-01	1.50E-01	7.20E-02	----	4.47E-02	1.67E-01	1.96E-01	2.87E-01	5.70E-01
Antimony	*9.30E-06*	1.20E-04	2.34E-05	*1.01E-05*	5.13E-05	2.40E-05	3.12E-05	*1.20E-05*	----	1.38E-05	6.27E-05	9.39E-05	9.42E-05	1.20E-04
Arsenic	2.34E-05	*2.85E-05*	7.11E-05	3.33E-05	8.22E-04	4.56E-04	1.82E-04	6.69E-05	----	7.68E-05	4.71E-04	2.62E-04	1.10E-03	1.10E-03
Barium	1.85E-04	2.47E-04	5.79E-04	4.11E-04	9.03E-03	6.27E-03	3.03E-03	1.13E-03	----	7.32E-04	4.38E-03	2.63E-03	5.88E-03	9.03E-03
Beryllium	*4.65E-05*	*1.43E-04*	*5.55E-05*	*5.10E-05*	*4.80E-05*	*5.10E-05*	*4.80E-05*	*6.00E-05*	----	*2.40E-05*	*4.65E-05*	*4.80E-05*	*5.25E-05*	1.43E-04
Bismuth	*4.65E-05*	*1.43E-04*	*5.55E-05*	*5.10E-05*	*4.80E-05*	*5.10E-05*	*4.80E-05*	*6.00E-05*	----	*2.40E-05*	*4.65E-05*	*4.80E-05*	*5.25E-05*	1.43E-04
Boron	*9.30E-04*	*2.85E-03*	*1.13E-03*	*1.01E-03*	*9.60E-04*	*1.01E-03*	*9.60E-04*	*1.20E-03*	----	*4.80E-04*	2.01E-03	2.55E-03	1.17E-02	1.17E-02
Cadmium	*4.65E-06*	*1.43E-05*	1.95E-05	*5.10E-06*	7.23E-04	5.19E-04	8.13E-05	2.70E-05	----	2.82E-05	8.25E-05	4.68E-05	2.37E-04	7.23E-04
Calcium	1.10E-01	5.82E-02	6.24E-01	3.54E-01	3.87	2.51	2.37	1.40	----	4.17E-01	2.78E+00	5.52E+00	9.54E+00	9.54E+00
Chromium	*4.65E-05*	*1.43E-04*	*5.55E-05*	*5.10E-05*	9.39E-04	7.23E-04	2.88E-04	1.71E-04	----	3.00E-04	5.28E-04	5.52E-04	8.58E-04	9.39E-04
Cobalt	*9.30E-06*	*2.85E-05*	3.06E-05	*1.01E-05*	5.82E-04	3.60E-04	9.99E-05	4.08E-05	----	3.72E-05	7.44E-05	9.96E-05	2.60E-04	5.82E-04
Copper	2.67E-04	*1.43E-04*	2.23E-03	3.90E-04	9.27E-03	6.57E-03	3.84E-03	2.55E-03	----	1.33E-03	1.01E-02	4.23E-03	2.15E-02	2.15E-02
Iron	2.28E-02	*8.55E-03*	5.73E-02	5.19E-02	6.57E-01	4.59E-01	1.54E-01	8.61E-02	----	4.98E-02	1.80E-01	1.87E-01	5.25E-01	6.57E-01
Lead	7.77E-05	*1.43E-05*	8.16E-04	1.62E-04	4.17E-03	1.69E-03	1.54E-03	5.46E-04	----	4.11E-04	3.78E-03	3.48E-03	6.60E-03	6.60E-03
Lithium	*4.65E-04*	*1.43E-03*	*5.55E-04*	*5.10E-04*	*4.80E-04*	*5.10E-04*	*4.80E-04*	*6.00E-04*	----	*2.40E-04*	*4.65E-04*	*4.80E-04*	1.29E-03	1.43E-03
Magnesium	1.76E-02	1.11E-02	1.27E-01	1.22E-01	1.34	1.05	3.78E-01	2.47E-01	----	1.04E-01	9.87E-01	6.36E-01	1.73E+00	1.73E+00
Manganese	1.04E-03	7.74E-04	7.68E-03	5.22E-03	7.50E-02	5.10E-02	1.62E-02	8.64E-03	----	5.73E-03	2.59E-02	1.57E-02	4.08E-02	7.50E-02
Molybdenum	*4.65E-06*	*1.43E-05*	*4.50E-05*	*2.55E-05*	5.10E-04	4.11E-04	*5.85E-05*	*7.20E-05*	----	8.61E-05	9.48E-04	3.99E-04	1.29E-03	1.29E-03
Nickel	*4.65E-05*	*1.43E-04*	1.23E-04	1.92E-04	1.24E-03	9.84E-04	3.87E-04	2.76E-04	----	1.83E-04	6.33E-04	6.51E-04	4.17E-03	4.17E-03
Phosphorus	*4.65E-03*	*1.43E-02*	6.48E-01	3.27E-01	3.69	3.21	1.29	1.03	----	4.29E-01	4.11E+00	8.13E+00	1.76E+01	1.76E+01
Potassium	1.14E-02	*1.43E-02*	7.50E-01	3.99E-01	5.13	3.99	1.36	1.41	----	8.82E-01	7.44E+00	4.20E+00	1.97E+01	1.97E+01
Selenium	*9.30E-05*	*2.85E-04*	*1.13E-04*	*1.01E-04*	4.44E-04	9.63E-04	*9.60E-05*	*1.20E-04*	----	*4.80E-05*	2.79E-04	4.26E-04	1.16E-03	1.16E-03
Silicon	4.08E-02	*1.43E-02*	6.93E-02	6.84E-02	1.03	9.36E-01	2.58E-01	1.36E-01	----	6.87E-02	5.25E-01	4.17E-01	6.18E-01	1.03E+00
Silver	*9.30E-07*	*2.85E-06*	1.36E-05	3.18E-06	1.05E-04	3.99E-05	6.03E-05	1.22E-05	----	6.78E-06	8.79E-05	6.30E-05	8.67E-05	1.05E-04
Sodium	1.11E-02	*1.43E-02*	4.11E-01	3.45E-02	1.44	1.18	6.90E-01	3.54E-01	----	7.26E-02	2.35E-01	5.61E-01	5.31E+00	5.31E+00
Strontium	3.51E-04	1.83E-04	5.91E-04	5.13E-04	8.91E-03	6.96E-03	5.64E-03	1.16E-03	----	7.14E-04	3.69E-03	4.29E-03	1.30E-02	1.30E-02
Thallium	*9.30E-06*	*2.85E-05*	*1.13E-05*	*1.01E-05*	*9.60E-06*	*1.01E-05*	*9.60E-06*	*1.20E-05*	----	*4.80E-06*	*9.30E-06*	*9.60E-06*	*1.05E-05*	2.85E-05
Tin	*9.30E-06*	*2.85E-05*	*1.13E-05*	*1.01E-05*	2.85E-05	2.07E-05	*9.60E-06*	*1.20E-05*	----	*4.80E-06*	*9.30E-06*	*9.60E-06*	*1.05E-05*	2.85E-05
Titanium	*9.30E-04*	*2.85E-03*	*1.13E-03*	*1.01E-03*	6.03E-03	8.28E-03	2.67E-03	*1.20E-03*	----	*4.80E-04*	2.25E-03	2.55E-03	3.54E-03	8.28E-03
Uranium	*9.30E-07*	*2.85E-06*	2.79E-06	*1.01E-06*	5.16E-05	4.62E-05	3.45E-05	3.72E-06	----	3.18E-06	7.41E-06	5.94E-06	2.18E-05	5.16E-05
Vanadium	*9.30E-05*	*2.85E-04*	*1.13E-04*	*1.01E-04*	1.22E-03	9.12E-04	2.73E-04	*1.20E-04*	----	1.05E-04	2.52E-04	2.46E-04	5.49E-04	1.22E-03
Zinc	1.80E-03	*8.55E-04*	1.39E-02	3.21E-03	9.90E-02	5.94E-02	1.53E-02	1.16E-02	----	8.76E-03	6.36E-02	2.86E-02	1.62E-01	1.62E-01

NOP1 Station Monitoring Results (concentrations expressed in g/m²/30 days)				
Metal	**April**	**May**	**June**	**Max**
Aluminum	1.80E-01	8.10E-02	1.06E-01	1.80E-01
Antimony	*1.28E-05*	9.60E-06	1.26E-05	1.28E-05
Arsenic	1.94E-04	4.38E-05	7.32E-05	1.94E-04
Barium	9.12E-04	4.38E-04	1.51E-03	1.51E-03
Beryllium	*1.07E-05*	*1.07E-05*	*1.65E-05*	1.65E-05
Bismuth	*1.07E-05*	*1.07E-05*	*1.65E-05*	1.65E-05
Boron	*2.10E-04*	*2.10E-04*	*3.30E-04*	3.30E-04
Cadmium	3.18E-05	9.18E-06	1.11E-05	3.18E-05
Calcium	3.81E-01	1.94E-01	1.13	1.13
Chromium	1.67E-04	1.02E-04	1.98E-04	1.98E-04
Cobalt	5.25E-05	1.95E-05	7.74E-05	7.74E-05
Copper	6.90E-04	2.61E-04	4.59E-04	6.90E-04
Iron	1.46E-01	6.75E-02	1.08E-01	1.46E-01
Lead	4.41E-04	5.58E-04	3.75E-04	5.58E-04
Lithium	2.67E-04	*1.07E-04*	*1.65E-04*	2.67E-04
Magnesium	7.74E-02	4.59E-02	3.24E-01	3.24E-01
Manganese	6.24E-03	4.41E-03	1.13E-02	1.13E-02
Molybdenum	2.10E-05	*6.45E-06*	1.02E-05	2.10E-05
Nickel	1.28E-04	8.16E-05	1.92E-04	1.92E-04
Phosphorus	*7.50E-03*	6.81E-03	8.40E-03	8.40E-03
Potassium	8.28E-02	3.00E-02	7.68E-02	8.28E-02
Selenium	*2.10E-05*	*2.10E-05*	*3.30E-05*	3.30E-05
Silicon	3.06E-01	9.84E-02	1.75E-01	3.06E-01
Silver	2.55E-06	2.69E-05	6.03E-06	2.69E-05
Sodium	2.86E-02	1.15E-02	3.48E-02	3.48E-02
Strontium	9.51E-04	4.47E-04	1.87E-03	1.87E-03
Thallium	*2.10E-06*	*2.10E-06*	*3.30E-06*	3.30E-06
Tin	*4.20E-06*	*2.10E-06*	*3.30E-06*	4.20E-06
Titanium	3.03E-03	1.32E-03	3.48E-03	3.48E-03
Uranium	5.61E-06	1.83E-06	3.84E-06	5.61E-06
Vanadium	2.13E-04	1.14E-04	2.13E-04	2.13E-04
Zinc	8.58E-03	2.41E-03	2.46E-03	8.58E-03

WCP1 Station Monitoring Results (concentrations expressed in g/m²/30 days)				
Metal	**April**	**May**	**June**	**Max**
Aluminum	1.03E-01	1.40E-01	3.27E-02	1.40E-01
Antimony	*9.15E-06*	1.17E-05	6.30E-06	1.17E-05
Arsenic	1.89E-04	2.57E-04	6.81E-05	2.57E-04
Barium	1.38E-03	1.80E-03	8.88E-04	1.80E-03
Beryllium	*1.50E-05*	*1.07E-05*	*1.28E-05*	1.50E-05
Bismuth	*1.50E-05*	*1.07E-05*	*1.28E-05*	1.50E-05
Boron	*3.00E-04*	1.53E-03	1.68E-03	1.68E-03
Cadmium	8.01E-05	9.57E-05	2.46E-05	9.57E-05
Calcium	1.31	2.03	8.88E-01	2.03
Chromium	2.34E-04	2.93E-04	9.96E-05	2.93E-04
Cobalt	1.01E-04	2.80E-04	6.27E-05	2.80E-04
Copper	6.36E-03	8.37E-03	4.65E-03	8.37E-03
Iron	1.45E-01	2.32E-01	5.28E-02	2.32E-01
Lead	3.48E-04	4.05E-04	1.38E-04	4.05E-04
Lithium	*1.50E-04*	3.36E-04	*1.28E-04*	3.36E-04
Magnesium	1.90E-01	3.48E-01	3.63E-01	3.63E-01
Manganese	5.97E-03	1.24E-02	1.18E-02	1.24E-02
Molybdenum	2.74E-04	4.35E-04	3.42E-04	4.35E-04
Nickel	2.40E-04	5.46E-04	6.60E-04	6.60E-04
Phosphorus	3.36	4.65	2.92	4.65
Potassium	6.24	7.98	4.53	7.98
Selenium	3.87E-04	3.75E-04	1.62E-04	3.87E-04
Silicon	2.38E-01	3.06E-01	6.30E-02	3.06E-01
Silver	2.00E-05	2.69E-05	8.19E-06	2.69E-05
Sodium	1.47	1.80	2.38E-01	1.80
Strontium	9.60E-04	2.43E-03	1.52E-03	2.43E-03
Thallium	*3.00E-06*	*2.10E-06*	*2.55E-06*	3.00E-06
Tin	*6.00E-06*	7.80E-06	*2.55E-06*	7.80E-06
Titanium	2.19E-03	2.94E-03	6.00E-04	2.94E-03
Uranium	6.15E-06	1.21E-05	3.15E-06	1.21E-05
Vanadium	2.46E-04	3.69E-04	8.40E-05	3.69E-04
Zinc	1.98E-02	3.81E-02	2.58E-02	3.81E-02

GH1 Station Monitoring Results (concentrations expressed in g/m²/30 days)				
Metal	**April**	**May**	**June**	**Max**
Aluminum	1.38E-02	1.94E-02	3.99E-02	3.99E-02
Antimony	*4.20E-06*	*2.10E-06*	6.60E-06	6.60E-06
Arsenic	1.83E-05	2.40E-05	6.00E-05	6.00E-05
Barium	1.77E-04	2.44E-04	3.45E-04	3.45E-04
Beryllium	*1.07E-05*	*1.07E-05*	*9.75E-06*	1.07E-05
Bismuth	*1.07E-05*	*1.07E-05*	*9.75E-06*	1.07E-05
Boron	*2.10E-04*	*2.10E-04*	4.50E-04	4.50E-04
Cadmium	4.08E-06	*1.07E-06*	6.12E-06	6.12E-06
Calcium	1.87E-01	3.39E-01	3.06E-01	3.39E-01
Chromium	2.82E-05	3.27E-05	1.03E-04	1.03E-04
Cobalt	2.52E-05	2.94E-05	3.03E-05	3.03E-05
Copper	3.27E-04	4.32E-04	5.01E-04	5.01E-04
Iron	1.71E-02	2.19E-02	4.50E-02	4.50E-02
Lead	1.32E-05	4.08E-05	4.83E-05	4.83E-05
Lithium	*1.07E-04*	*1.07E-04*	*9.75E-05*	1.07E-04
Magnesium	4.62E-02	7.89E-02	1.14E-01	1.14E-01
Manganese	1.08E-03	5.31E-04	3.90E-03	3.90E-03
Molybdenum	1.37E-05	7.98E-05	6.03E-05	7.98E-05
Nickel	3.06E-05	5.04E-05	1.38E-04	1.38E-04
Phosphorus	1.81E-01	4.50E-01	3.72E-01	4.50E-01
Potassium	3.00E-01	3.78E-01	6.42E-01	6.42E-01
Selenium	*2.10E-05*	*2.10E-05*	*1.95E-05*	2.10E-05
Silicon	2.36E-02	4.14E-02	5.94E-02	5.94E-02
Silver	6.00E-07	9.90E-07	1.68E-06	1.68E-06
Sodium	6.66E-02	1.16E-01	3.18E-02	1.16E-01
Strontium	4.11E-04	3.45E-04	7.47E-04	7.47E-04
Thallium	*2.10E-06*	*2.10E-06*	*1.95E-06*	2.10E-06
Tin	*2.10E-06*	*2.10E-06*	*1.95E-06*	2.10E-06
Titanium	*2.10E-04*	5.40E-04	*5.85E-04*	5.85E-04
Uranium	1.32E-06	1.17E-06	2.25E-06	2.25E-06
Vanadium	*2.10E-05*	4.50E-05	9.30E-05	9.30E-05
Zinc	1.07E-03	8.10E-04	2.95E-03	2.95E-03

CP1 Station Monitoring Results (concentrations expressed in g/m²/30 days)				
Metal	**April**	**May**	**June**	**Max**
Aluminum	2.81E-02	4.50E-02	6.48E-02	6.48E-02
Antimony	*2.10E-06*	6.00E-06	9.00E-06	9.00E-06
Arsenic	1.41E-05	4.80E-05	8.85E-05	8.85E-05
Barium	2.29E-04	6.57E-04	2.18E-03	2.18E-03
Beryllium	*1.02E-05*	*1.07E-05*	*1.65E-05*	1.65E-05
Bismuth	*1.02E-05*	*1.07E-05*	*1.65E-05*	1.65E-05
Boron	*2.10E-04*	*2.10E-04*	9.00E-04	9.00E-04
Cadmium	3.27E-06	1.15E-05	2.19E-05	2.19E-05
Calcium	3.30E-01	3.15E-01	1.51	1.51
Chromium	4.89E-05	9.78E-05	1.74E-04	1.74E-04
Cobalt	1.29E-05	5.79E-05	7.05E-05	7.05E-05
Copper	1.97E-04	1.70E-03	4.38E-03	4.38E-03
Iron	2.84E-02	6.00E-02	8.52E-02	8.52E-02
Lead	3.09E-05	7.68E-05	1.37E-04	1.37E-04
Lithium	*1.02E-04*	*1.07E-04*	*1.65E-04*	1.65E-04
Magnesium	6.57E-02	1.71E-01	4.29E-01	4.29E-01
Manganese	1.09E-03	7.11E-03	5.58E-03	7.11E-03
Molybdenum	1.72E-05	8.43E-05	3.30E-04	3.30E-04
Nickel	3.69E-05	3.12E-04	2.49E-04	3.12E-04
Phosphorus	2.38E-01	4.86E-01	1.97	1.97
Potassium	1.49E-01	8.28E-01	4.14	4.14
Selenium	*2.10E-05*	5.40E-05	1.98E-04	1.98E-04
Silicon	5.58E-02	1.12E-01	1.25E-01	1.25E-01
Silver	1.65E-06	3.51E-06	6.57E-06	6.57E-06
Sodium	9.63E-02	1.15E-01	9.87E-01	9.87E-01
Strontium	2.60E-04	7.59E-04	2.27E-03	2.27E-03
Thallium	*2.10E-06*	*2.10E-06*	*3.45E-06*	3.45E-06
Tin	*2.10E-06*	5.40E-06	*3.45E-06*	5.40E-06
Titanium	6.60E-04	1.23E-03	1.53E-03	1.53E-03
Uranium	1.95E-06	1.77E-05	4.59E-06	1.77E-05
Vanadium	6.30E-05	1.47E-04	1.56E-04	1.56E-04
Zinc	1.06E-03	5.40E-03	1.74E-02	1.74E-02

APPENDIX A-4:

SO_2 AND NO_2 PASSIVE SAMPLING RESULTS

Tait Road Station Monitoring Results (concentrations expressed in µg/m³)		
Month	**SO_2**	**NO_2**
April	*0.13*	2.63
May	0.79	1.50
June	1.05	1.50
No. Valid Samples	3	3
% Valid data	100%	100%
Arithmetic Mean	0.65	1.88
Max Monthly Concentration	1.05	2.63
Min Monthly Concentration	*0.13*	1.50
Comparison Limit	30	78
No. > Limit	0	0
MDL	0.26	0.19
No. < MDL	1	0

Gallinger Road Station Monitoring Results (concentrations expressed in µg/m³)		
Month	**SO_2**	**NO_2**
April	*0.13*	0.19
May	1.31	0.94
June	0.52	0.75
No. Valid Samples	3	3
% Valid data	100%	100%
Arithmetic Mean	0.65	0.63
Max Monthly Concentration	1.31	0.94
Min Monthly Concentration	*0.13*	0.19
Comparison Limit	30	78
No. > Limit	0	0
MDL	0.26	0.19
No. < MDL	1	0

APPENDIX B:
NOTICE OF EXCEEDANCES FOR Q2 2021

Ontario

Ministry of the Environment and Climate Change

Notification of Exceedance – Local Air Quality Regulation

General Information

Information requested in this notification form is collected under the authority of the *Environmental Protection Act*, R.S.O. 1990 (EPA) and Ontario Regulation 419/05: Air Pollution – Local Air Quality (the Regulation) made under the EPA and will be used to collect information relating to a measured or modelled air-related exceedance as required by s.25(9), s.28(1) and s.30(3) of the Regulation. The Ministry of the Environment and Climate Change (Ministry) may also request additional information.

1. Questions regarding completion and submission of this notification form should be directed to your local Ministry District Office. A list of these District Offices (including fax numbers) is available on the Ministry Internet site at http://www.ontario.ca/environment-and-energy/ministry-environment-and-climate-change-district-locator. A copy of this form may be acquired through the Ministry public web site http://www.ontario.ca/environment-and-energy/rules-air-quality-and-pollution or by contacting any Ministry office.

2. For notification under s.25(9) or s.28(1), the completed notification form should be sent, as soon as practicable, to the local Ministry District Office which has jurisdiction over the area in which the facility is located. A list of these District Offices (including fax numbers) is available on the Ministry Internet site at http://www.ontario.ca/environment-and-energy/ministry-environment-and-climate-change-district-locator.

3. For notification under s.30(3), the completed notification form should be immediately faxed to the local Ministry District Office which has jurisdiction over the area which the facility is located. A list of these District Offices (including fax numbers) is available on the Ministry Internet site at http://www.ontario.ca/environment-and-energy/ministry-environment-and-climate-change-district-locator. If the exceedance is determined outside of the business hours of the District Office then the completed notification form should be faxed to the Spills Action Center (1-800-268-6061).

4. Information on this form may be claimed as confidential but will be subject to the *Freedom of Information and Protection of Privacy Act* (FOIPPA) and the EBR. If you do not claim confidentiality at the time of submitting the information, the MOECC Ministry may make the information available to the public without further notice to you.

Instructions

This form should be used to notify the Ministry of a measured or modelled air-related exceedance. Notification is required under the Regulation and failure to notify the Ministry constitutes an offence under the Regulation and the EPA.

The publication titled "Air Contaminants Benchmarks (ACB) List: Standards, guidelines and screening levels for assessing point of impingement concentrations of air contaminants" contains two types of benchmarks: Benchmark 1 values (standards and guidelines) and Benchmark 2 values (screening levels). This list is available on the Internet site at https://www.ontario.ca/page/air-contaminants-benchmarks-list-standards-guidelines-and-screening-levels-assessing-point. This form is to be used to notify the Ministry of an exceedance of a Benchmark 1 value. If a concentration of a contaminant exceeds a Benchmark 1 value that is based on a guideline value, it is an indication that discharges of the contaminant may cause an adverse effect. If a concentration of a contaminant exceeds a Benchmark 2 value, it may be an indication that discharges of the contaminant may cause an adverse effect – further assessment should be undertaken to determine if an adverse effect may occur. If so, this form should be used to notify the Ministry.

This form may be used for notification of exceedances of more than one contaminant; Table 1 (or equivalent) should be completed for modelled exceedances. Table 2 should be completed for measured exceedances. If this notification is made pursuant to s. 30 then this form must be submitted immediately.

Note: The Ministry publishes a separate list of Ontario's Ambient Air Quality Criteria (AAQCs) which can be found on our website http://www.ontario.ca/document/ontarios-ambient-air-quality-criteria-sorted-contaminant-name. AAQCs are intended to address general air quality, not contributions of a contaminant to air quality from a facility. Hence, the notification requirements under the Regulation do not apply to AAQCs.

 © Queen's Printer for Ontario, 2017

Regulatory Authority

Exceedance of a Benchmark 1 Value (Standard or Guideline)

"28. (1) A person who discharges or causes or permits the discharge of a contaminant shall, as soon as practicable, notify a provincial officer in writing if,

(a) the person uses an approved dispersion model to predict concentrations of the contaminant that result from the discharges and,

i. the use of the model indicates that discharges of the contaminant may result in a contravention of section 19 or 20, or

ii. sections 19 and 20 do not apply to discharges of the contaminant and the use of the model indicates that discharges of the contaminant may cause an adverse effect;

(b) measurements of air samples indicate that discharges of the contaminant may result in a contravention of section 19 or 20; or

(c) sections 19 and 20 do not apply to discharges of the contaminant and measurements of air samples indicate that discharges of the contaminant may cause an adverse effect. …"

3. The emission rate that, for the relevant averaging period, is derived from a combination of a method that complies with paragraph 1 or 2 and ambient monitoring, according to a plan approved by the Director as likely to provide an accurate reflection of emissions.

"25. (9) A person who is required under subsection (8) to complete the update of a report not later than March 31 in a year shall, as soon as practicable after that date, notify a provincial officer in writing if the person has started to use an approved dispersion model with respect to a contaminant for the purpose of completing the update but has not yet complied with section 12, and,

(a) the use of the model indicates that discharges of the contaminant may result in a contravention of section 19 or 20; or

(b) sections 19 and 20 do not apply to discharges of the contaminant and the use of the model indicates that discharges of the contaminant may cause an adverse effect. …"

Exceedance of an Upper Risk Threshold

"30. (1) A person who discharges or causes or permits the discharge of a contaminant listed in Schedule 6 into the air shall comply with subsections (3) and (4) if there is reason to believe, based on any relevant information, that discharges of the contaminant may result in,

(a) the concentration of the contaminant exceeding the half hour upper risk threshold set out for that contaminant in Schedule 6 at a point of impingement, if section 19 applies to the person in respect of the contaminant; or

(b) the other time period upper risk threshold set out for that contaminant in Schedule 6 at a point of impingement, if section 20 applies to the person in respect of the contaminant.

(1.1) The two items in Schedule 6 that set out upper risk thresholds for total reduced sulphur (TRS) compounds specify the facilities to which they apply.

(2) Without limiting the generality of subsection (1), the reference in that subsection to relevant information includes relevant information from predictions of a dispersion model, including,

(a) an approved dispersion model or other dispersion model; or

(b) a dispersion model that is not used in accordance with this Regulation.

(3) If subsection (1) applies to a discharge, the person who discharged or caused or permitted the discharge of the contaminant shall immediately notify the Director in writing. …"

Section 1 - Ministry of the Environment and Climate Change District Office Information

Date Form Submitted (yyyy/mm/dd)	Date Exceedance Determined (yyyy/mm/dd)
2021/07/26	2021/07/23

MOECC District Office	District Office Fax Number
Thunder Bay District Office	807 475-1754

Supporting information attached? ☑ Yes ☐ No If yes, number of pages 2

Section 2 - Facility and Site Information

Name of Person Making the Notification

Last Name	First Name
Cornell	Garnet

Business Name (the name under which the entity is operating or trading - also referred to as trade name)
New Gold Inc.

Business Number

Business Activity Description (a description of the business endeavour, this may include products sold, services provided, equipment used, etc.)
Gold ore mining

Site Name	MOECC District Office
Rainy River Mine	Thunder Bay District Office

Primary North American Industry Classification System (NAICS) Code
212220

☐ Section 19 (Schedule 2) applies ☑ Section 20 (Schedule 3) applies

Other NAICS Code

Civic Address

Unit Number	Street Number	Street Name	PO Box
	1361	Roen Road	

Survey Address

Lot and Concession: used to indicate location within a subdivided township and consists of a lot number and a concession number.

Part and Reference: used to indicate location within an unsubdivided township or unsurveyed territory, and consists of a part and a reference plan number indicating the location within that plan. Attach copy of the plan.

Lot	Concession	Part	Reference Plan

Non Address Information (includes any additional information to clarify requestor's physical location)

Municipality/Unorganized Township or Territory Upper Tier/District	Postal Code
Chapple	P0W 1A0

Telephone Number	Fax Number	Mobile Number	Email Address
807 234-8170 ext.		807 276-0106	Garnet.Cornell@newgold.com

Geo Reference

Description of location	Map Datum	Zone	Accuracy Estimate	Geo-Referencing Method	UTM Easting	UTM Northing
Tait Road Monitoring Station	NAD83	15	+/- 10m	Google Earth	426072	5406996
Northwest Station (TMA)	NAD83	15	+/- 10m	Google Earth	419797	5413042

Environmental Compliance Approval (ECA) Number(s) and/or Environmental Activity and Sector Registry (EASR) Number(s) – attach a separate list if more space is required

1 0412-A2LR4V 2 _____ 3 _____

4 _____ 5 _____ 6 _____

Section 3 - Type of Notification – Table 1 or Table 2 should be completed and submitted with this notification

☑ This is a notification under subsection 28(1) – Notice to Provincial Officer as a result of modelling or measurements (select all that apply)

☑ Exceedance of Benchmark 1 Value (Standard) ☐ Exceedance of Benchmark 1 Value (Guideline) ☐ Exceedance of Benchmark 2 Value (determined discharge may cause adverse effect)

☐ Other (explain)

☐ This is a notification under subsection 25(9) – Notice to Provincial Officer as a result an update of an Emission Summary and Dispersion Modelling Report (ESDM) (select all that apply)

☐ Exceedance of Benchmark 1 Value (Standard) ☐ Exceedance of Benchmark 1 Value (Guideline) ☐ Exceedance of Benchmark 2 Value (determined discharge may cause adverse effect)

☐ Other (explain)

Date that Refinement (see section 12 of the regulation) is anticipated to be complete (yyyy/mm/dd)

☐ This is a notification under subsection 30(3) – Notice to the Director as a result of an exceedance of Upper Risk Threshold (URT) (Schedule 6)

☐ Yes ☐ No

Section 4 - Follow-Up Action

Section 28 Notifications

Will an Abatement Plan be submitted to the Ministry within 30 days of this notice as per s.29?

☐ Yes ☑ No If No, please provide the following

Type of Previously Submitted Abatement Plan	Date Submitted under s.29 of the Regulation (yyyy/mm/dd)

Subsection 30(3) Notifications for URT Exceedance

Has an ESDM Report been prepared in accordance with s.30(4) and submitted to the Ministry?

☐ Yes ☐ No If No, what is the anticipated submission date for the ESDM* (yyyy/mm/dd)?

*Note: ESDM Report must be submitted within three months of the discharge

Section 5 - Model Based Assessment – please complete this section if notifying of a modelled exceedance (complete Table 1)

Was an ESDM Report prepared in accordance with s.26 of the Regulation?

☐ Yes ☐ No

If yes, was the ESDM Report prepared to fulfill (select all that apply)

☐ s.22 of the Regulation - Application for ECA under s. 20.2 of the *Environmental Protection Act*

☐ s.9 of the EPA – Condition of an ECA (e.g. ECA with Limited Operational Flexibility)

☐ s.23 of the Regulation - Requirement for Schedule 4 and 5 sector facilities

☐ s.24 of the Regulation - Notice issued by Director

☐ s.25 of the Regulation - Requirement for updating ESDM Report

☐ s.30(4) of the Regulation – Required as result of URT exceedance

☐ s.33(1) of the Regulation – Required as part of a request for a site-specific standard

☐ s.11 (1) of Ontario Regulation 1/17 – Registrations under Part II.2 of the Act – Activities Requiring Assessment of Air Emissions (Air Emissions EASR Regulation)

☐ Other (please specify) _____

What approved dispersion model was used? Include version number (select all that apply)

☐ Appendix to Reg. 346 ☐ AERMOD ☐ ASHRAE ☐ SCREEN 3

☐ Other (please specify) (if other, provide copy of section 7 notice) _____

Was the approved dispersion model refined as required by s.12 of the Regulation (i.e. operating conditions, emission rates)?

☐ Yes ☐ No

What meteorological data was used?

☐ Regional Data ☐ Regional data refined, in consultation with the EMRB, to reflect local land use conditions

☐ Local or Site-Specific Data ☐ Data from a computational method

Did you receive approval under s. 13 for the Meteorological Data? ☐ Yes ☐ No

Have you modelled a concentration at a Point of Impingement (POI) other than the maximum POI? (please include figure showing maximum POI location)

☐ Yes ☐ No

If Yes, specify additional locations (i.e., land use) at which the exceedence may occur (select all that apply – please include figure showing additional modelled locations):

☐ Health Care ☐ Seniors Residence/Long Term Care Facility ☐ Child Care Facility ☐ Educational Facility

☐ Dwelling

☐ Location Specified by the Director (explain) _____

☐ Other Location (explain) _____

Section 6 - Measurement Based Assessment – please complete this section if notifying of a measured **exceedance**

(Complete Table 2 or equivalent)

Type of Monitor / Measurement Type	Date of Exceedance (yyyy/mm/dd)	Duration of Exceedance
Plastic Dustfall Sampler Jar	2021/05/31	30-day

Is the monitoring approved by the Ministry?

☑ Yes ☐ No If yes, please describe the approval MECP Approval letter dated November 9, 2016

Monitoring Reference Number: (if available)

Specify the location (i.e., land use) at which the exceedence did occur (select all that apply):

☐ Health Care ☐ Seniors Residence/Long Term Care Facility ☐ Child Care Facility ☐ Educational Facility

☐ Dwelling

☐ Location Specified by the Director (explain) _____

☑ Other Location (explain) Exceedances occurred at Tait Road Station and Northwest Station

Section 7 - Statement of Company Official

I, the undersigned hereby declare that, to the best of my knowledge:

- The information contained herein and the information submitted is complete and accurate in every way and I am aware of the penalties against providing false information as per s.184 (2) of the *Environmental Protection Act*.
- I have been authorized to act on behalf of the company identified in this form for the purpose of providing this notification of exceedance under the Regulation to the Ministry of the Environment and Climate Change.
- I have used the most recent notification form (as obtained from the Ministry Internet site at http://www.ontario.ca/environment-and-energy/rules-air-quality-and-pollution or from my local Ministry District Office and I have included all necessary information required by the Regulation and identified on this form.

Name of Signing Authority	Title
Garnet Cornell	Environment Superintendent

Telephone Number	Fax Number	Mobile Number	Email Address
807 234-8170 ext.		807 276-0106	Garnet.Cornell@newgold.com

Signature	Date (yyyy/mm/dd)
Cat all	2021/07/26

Address Information

Same as Site Physical Address? ☑ Yes ☐ No (If no, please provide signing authority mailing address information below)

Civic Address

Unit Number	Street Number	Street Name	PO Box
	1361	Roen Road	

Delivery Designator: If signing authority mailing address is a Rural Route, Suburban Service, Mobile Route or General Delivery (i.e., RR#3)

Municipality/Unorganized Township or Territory	County/District	Province/State	Country	Postal Code
Chapple				P0W 1A0

Table 1 - Information About Modelled Exceedance

Contaminant [a]	CAS [b] Number	Air Dispersion Model Used (include version number)	Maximum POI [c] Concentration (µg/m³)	Averaging Period (hours)(minute/ hour/day/ annual)	Ministry Limit (µg/m³) or URT (µg/m³)	Limiting Effect	Schedule 2, Schedule 3, Guideline, Schedule 6 URT or Other (specify) [d]	Benchmark 1, Benchmark 2, or No Benchmark [e] (specify)	Percentage of Ministry Limit or URT

Provide additional information as needed (e.g. Location of Maximum POI Concentrations (e.g. UTM, street address, land use at Maximum POI if known, etc.)

Notes:

(a) Proper Chemical Name should be given (Abbreviations, acronyms, numeric codes, trade names and mixtures NOT ACCEPTABLE).

(b) CAS Number : Chemical Abstracts Services Number (UNIQUE Identifier for a chemical)

(c) POI Concentration : Point of Impingement Concentration

(d) Schedule 2 = section 19 applies; Schedule 3 = section 20 applies

(e) If a B2 value is exceeded, the regulation requires potential adverse effects to be assessed. If it is determined that an adverse effect may occur for the contaminant in question, this should be included in the table

Table 2 - Information About Measured Exceedance

Contaminant [a]	CAS [b] Number	Type of Assessment (Measurement Method)	Maximum POI [c] Concentration (µg/m³)	Averaging Period (minute/ hour/day/ annual)	Ministry Limit (µg/m3) or URT (µg/m³)	Limiting Effect	Schedule 2, Schedule 3, Guideline, Schedule 6 URT, or Other (specify)	Benchmark 1, Benchmark 2, or No Benchmark [d] (specify)	Percentage of Ministry Limit or URT
Total dustfall at Tait Rd.	N/A	Passive	10.35 g/m2/30d	30 days	7 g/m2/30d	Soiling	Schedule 3	B1	147.86%
Total dustfall at NW	N/A	Passive	9.18 g/m2/30d	30 days	7 g/m2/30d	Soiling	Schedule 3	B1	131.14%

* For additional measurement locations / sampling times, please include additional tables

** If you are reporting more than one exceedence, include the time of the exceedence in the contaminant column

Notes:

(a) Proper Chemical Name should be given (Abbreviations, acronyms, numeric codes, trade names and mixtures NOT ACCEPTABLE).

(b) CAS Number : Chemical Abstracts Services Number (UNIQUE Identifier for a chemical)

(c) POI Concentration : Point of Impingement Concentration

(d) Schedule 2 = section 19 applies; Schedule 3 = section 20 applies

(e) If a B2 value is exceeded, the regulation requires potential adverse effects to be assessed. If it is determined that an adverse effect may occur for the contaminant in question, this should be included in the table

Ontario

Ministry of the Environment and Climate Change

Notification of Exceedance – Local Air Quality Regulation

General Information

Information requested in this notification form is collected under the authority of the *Environmental Protection Act*, R.S.O. 1990 (EPA) and Ontario Regulation 419/05: Air Pollution – Local Air Quality (the Regulation) made under the EPA and will be used to collect information relating to a measured or modelled air-related exceedance as required by s.25(9), s.28(1) and s.30(3) of the Regulation. The Ministry of the Environment and Climate Change (Ministry) may also request additional information.

1. Questions regarding completion and submission of this notification form should be directed to your local Ministry District Office. A list of these District Offices (including fax numbers) is available on the Ministry Internet site at http://www.ontario.ca/environment-and-energy/ministry-environment-and-climate-change-district-locator. A copy of this form may be acquired through the Ministry public web site http://www.ontario.ca/environment-and-energy/rules-air-quality-and-pollution or by contacting any Ministry office.

2. For notification under s.25(9) or s.28(1), the completed notification form should be sent, as soon as practicable, to the local Ministry District Office which has jurisdiction over the area in which the facility is located. A list of these District Offices (including fax numbers) is available on the Ministry Internet site at http://www.ontario.ca/environment-and-energy/ministry-environment-and-climate-change-district-locator.

3. For notification under s.30(3), the completed notification form should be immediately faxed to the local Ministry District Office which has jurisdiction over the area which the facility is located. A list of these District Offices (including fax numbers) is available on the Ministry Internet site at http://www.ontario.ca/environment-and-energy/ministry-environment-and-climate-change-district-locator. If the exceedance is determined outside of the business hours of the District Office then the completed notification form should be faxed to the Spills Action Center (1-800-268-6061).

4. Information on this form may be claimed as confidential but will be subject to the *Freedom of Information and Protection of Privacy Act* (FOIPPA) and the EBR. If you do not claim confidentiality at the time of submitting the information, the MOECC Ministry may make the information available to the public without further notice to you.

Instructions

This form should be used to notify the Ministry of a measured or modelled air-related exceedance. Notification is required under the Regulation and failure to notify the Ministry constitutes an offence under the Regulation and the EPA.

The publication titled “Air Contaminants Benchmarks (ACB) List: Standards, guidelines and screening levels for assessing point of impingement concentrations of air contaminants” contains two types of benchmarks: Benchmark 1 values (standards and guidelines) and Benchmark 2 values (screening levels). This list is available on the Internet site at https://www.ontario.ca/page/air-contaminants-benchmarks-list-standards-guidelines-and-screening-levels-assessing-point. This form is to be used to notify the Ministry of an exceedance of a Benchmark 1 value. If a concentration of a contaminant exceeds a Benchmark 1 value that is based on a guideline value, it is an indication that discharges of the contaminant may cause an adverse effect. If a concentration of a contaminant exceeds a Benchmark 2 value, it may be an indication that discharges of the contaminant may cause an adverse effect – further assessment should be undertaken to determine if an adverse effect may occur. If so, this form should be used to notify the Ministry.

This form may be used for notification of exceedances of more than one contaminant; Table 1 (or equivalent) should be completed for modelled exceedances. Table 2 should be completed for measured exceedances. If this notification is made pursuant to s. 30 then this form must be submitted immediately.

Note: The Ministry publishes a separate list of Ontario’s Ambient Air Quality Criteria (AAQCs) which can be found on our website http://www.ontario.ca/document/ontarios-ambient-air-quality-criteria-sorted-contaminant-name. AAQCs are intended to address general air quality, not contributions of a contaminant to air quality from a facility. Hence, the notification requirements under the Regulation do not apply to AAQCs.

 © Queen's Printer for Ontario, 2017

Regulatory Authority

Exceedance of a Benchmark 1 Value (Standard or Guideline)

"28. (1) A person who discharges or causes or permits the discharge of a contaminant shall, as soon as practicable, notify a provincial officer in writing if,

(a) the person uses an approved dispersion model to predict concentrations of the contaminant that result from the discharges and,

i. the use of the model indicates that discharges of the contaminant may result in a contravention of section 19 or 20, or

ii. sections 19 and 20 do not apply to discharges of the contaminant and the use of the model indicates that discharges of the contaminant may cause an adverse effect;

(b) measurements of air samples indicate that discharges of the contaminant may result in a contravention of section 19 or 20; or

(c) sections 19 and 20 do not apply to discharges of the contaminant and measurements of air samples indicate that discharges of the contaminant may cause an adverse effect. …"

3. The emission rate that, for the relevant averaging period, is derived from a combination of a method that complies with paragraph 1 or 2 and ambient monitoring, according to a plan approved by the Director as likely to provide an accurate reflection of emissions.

"25. (9) A person who is required under subsection (8) to complete the update of a report not later than March 31 in a year shall, as soon as practicable after that date, notify a provincial officer in writing if the person has started to use an approved dispersion model with respect to a contaminant for the purpose of completing the update but has not yet complied with section 12, and,

(a) the use of the model indicates that discharges of the contaminant may result in a contravention of section 19 or 20; or

(b) sections 19 and 20 do not apply to discharges of the contaminant and the use of the model indicates that discharges of the contaminant may cause an adverse effect. …"

Exceedance of an Upper Risk Threshold

"30. (1) A person who discharges or causes or permits the discharge of a contaminant listed in Schedule 6 into the air shall comply with subsections (3) and (4) if there is reason to believe, based on any relevant information, that discharges of the contaminant may result in,

(a) the concentration of the contaminant exceeding the half hour upper risk threshold set out for that contaminant in Schedule 6 at a point of impingement, if section 19 applies to the person in respect of the contaminant; or

(b) the other time period upper risk threshold set out for that contaminant in Schedule 6 at a point of impingement, if section 20 applies to the person in respect of the contaminant.

(1.1) The two items in Schedule 6 that set out upper risk thresholds for total reduced sulphur (TRS) compounds specify the facilities to which they apply.

(2) Without limiting the generality of subsection (1), the reference in that subsection to relevant information includes relevant information from predictions of a dispersion model, including,

(a) an approved dispersion model or other dispersion model; or

(b) a dispersion model that is not used in accordance with this Regulation.

(3) If subsection (1) applies to a discharge, the person who discharged or caused or permitted the discharge of the contaminant shall immediately notify the Director in writing. …"

Section 1 - Ministry of the Environment and Climate Change District Office Information	
Date Form Submitted (yyyy/mm/dd) 2021/08/13	Date Exceedance Determined (yyyy/mm/dd) 2021/08/10

MOECC District Office	District Office Fax Number
Thunder Bay District Office	807 475-1754

Supporting information attached? ☑ Yes ☐ No If yes, number of pages 37

Section 2 - Facility and Site Information

Name of Person Making the Notification

Last Name	First Name
Cornell	Garnet

Business Name (the name under which the entity is operating or trading - also referred to as trade name)
New Gold Inc.

Business Number

Business Activity Description (a description of the business endeavour, this may include products sold, services provided, equipment used, etc.)
Gold ore mining

Site Name	MOECC District Office
Rainy River Mine	Thunder Bay District Office

Primary North American Industry Classification System (NAICS) Code
212220

☐ Section 19 (Schedule 2) applies ☑ Section 20 (Schedule 3) applies

Other NAICS Code

Civic Address

Unit Number	Street Number	Street Name	PO Box
	1361	Roen Road	

Survey Address

Lot and Concession: used to indicate location within a subdivided township and consists of a lot number and a concession number.

Part and Reference: used to indicate location within an unsubdivided township or unsurveyed territory, and consists of a part and a reference plan number indicating the location within that plan. Attach copy of the plan.

Lot	Concession	Part	Reference Plan

Non Address Information (includes any additional information to clarify requestor's physical location)

Municipality/Unorganized Township or Territory Upper Tier/District	Postal Code
Chapple	P0W 1A0

Telephone Number	Fax Number	Mobile Number	Email Address
807 234-8170 ext.		807 276-0106	Garnet.Cornell@newgold.com

Geo Reference

Description of location	Map Datum	Zone	Accuracy Estimate	Geo-Referencing Method	UTM Easting	UTM Northing
Tait Road Monitoring Station	NAD83	15	+/- 10m	Google Earth	426072	5406996
Northwest Station (TMA)	NAD83	15	+/- 10m	Google Earth	419797	5413042

Environmental Compliance Approval (ECA) Number(s) and/or Environmental Activity and Sector Registry (EASR) Number(s) – attach a separate list if more space is required

1 0412-A2LR4V 2 3
4 5 6

Section 3 - Type of Notification – Table 1 or Table 2 should be completed and submitted with this notification

☑ This is a notification under subsection 28(1) – Notice to Provincial Officer as a result of modelling or measurements (select all that apply)

- ☑ Exceedance of Benchmark 1 Value (Standard)
- ☐ Exceedance of Benchmark 1 Value (Guideline)
- ☐ Exceedance of Benchmark 2 Value (determined discharge may cause adverse effect)
- ☐ Other (explain)

_____

☐ This is a notification under subsection 25(9) – Notice to Provincial Officer as a result an update of an Emission Summary and Dispersion Modelling Report (ESDM) (select all that apply)

- ☐ Exceedance of Benchmark 1 Value (Standard)
- ☐ Exceedance of Benchmark 1 Value (Guideline)
- ☐ Exceedance of Benchmark 2 Value (determined discharge may cause adverse effect)
- ☐ Other (explain)

_____

Date that Refinement (see section 12 of the regulation) is anticipated to be complete (yyyy/mm/dd) _____

☐ This is a notification under subsection 30(3) – Notice to the Director as a result of an exceedance of Upper Risk Threshold (URT) (Schedule 6)

☐ Yes ☐ No

Section 4 - Follow-Up Action

Section 28 Notifications

Will an Abatement Plan be submitted to the Ministry within 30 days of this notice as per s.29?

☐ Yes ☑ No If No, please provide the following

Type of Previously Submitted Abatement Plan	Date Submitted under s.29 of the Regulation (yyyy/mm/dd)

Subsection 30(3) Notifications for URT Exceedance

Has an ESDM Report been prepared in accordance with s.30(4) and submitted to the Ministry?

☐ Yes ☐ No If No, what is the anticipated submission date for the ESDM* (yyyy/mm/dd)?

_____

*Note: ESDM Report must be submitted within three months of the discharge

Section 5 - Model Based Assessment – please complete this section if notifying of a modelled exceedance (complete Table 1)

Was an ESDM Report prepared in accordance with s.26 of the Regulation?

☐ Yes ☐ No

If yes, was the ESDM Report prepared to fulfill (select all that apply)

- ☐ s.22 of the Regulation - Application for ECA under s. 20.2 of the *Environmental Protection Act*
- ☐ s.9 of the EPA – Condition of an ECA (e.g. ECA with Limited Operational Flexibility)
- ☐ s.23 of the Regulation - Requirement for Schedule 4 and 5 sector facilities
- ☐ s.24 of the Regulation - Notice issued by Director
- ☐ s.25 of the Regulation - Requirement for updating ESDM Report
- ☐ s.30(4) of the Regulation – Required as result of URT exceedance
- ☐ s.33(1) of the Regulation – Required as part of a request for a site-specific standard

☐ s.11 (1) of Ontario Regulation 1/17 – Registrations under Part II.2 of the Act – Activities Requiring Assessment of Air Emissions (Air Emissions EASR Regulation)

☐ Other (please specify) _____

What approved dispersion model was used? Include version number (select all that apply)

☐ Appendix to Reg. 346 ☐ AERMOD ☐ ASHRAE ☐ SCREEN 3

☐ Other (please specify) (if other, provide copy of section 7 notice) _____

Was the approved dispersion model refined as required by s.12 of the Regulation (i.e. operating conditions, emission rates)?

☐ Yes ☐ No

What meteorological data was used?

☐ Regional Data ☐ Regional data refined, in consultation with the EMRB, to reflect local land use conditions

☐ Local or Site-Specific Data ☐ Data from a computational method

Did you receive approval under s. 13 for the Meteorological Data? ☐ Yes ☐ No

Have you modelled a concentration at a Point of Impingement (POI) other than the maximum POI? (please include figure showing maximum POI location)

☐ Yes ☐ No

If Yes, specify additional locations (i.e., land use) at which the exceedence may occur (select all that apply – please include figure showing additional modelled locations):

☐ Health Care ☐ Seniors Residence/Long Term Care Facility ☐ Child Care Facility ☐ Educational Facility

☐ Dwelling

☐ Location Specified by the Director (explain) _____

☐ Other Location (explain) _____

Section 6 - Measurement Based Assessment – please complete this section if notifying of a measured **exceedance**

(Complete Table 2 or equivalent)

Type of Monitor / Measurement Type	Date of Exceedance (yyyy/mm/dd)	Duration of Exceedance
Plastic Dustfall Sampler Jar	2021/06/30	30-day

Is the monitoring approved by the Ministry?

☑ Yes ☐ No If yes, please describe the approval MECP Approval letter dated November 9, 2016

Monitoring Reference Number: (if available)

Specify the location (i.e., land use) at which the exceedence did occur (select all that apply):

☐ Health Care ☐ Seniors Residence/Long Term Care Facility ☐ Child Care Facility ☐ Educational Facility

☐ Dwelling

☐ Location Specified by the Director (explain) _____

☑ Other Location (explain) Exceedances occurred at Tait Road Station and Northwest Station

Section 7 - Statement of Company Official

I, the undersigned hereby declare that, to the best of my knowledge:

- The information contained herein and the information submitted is complete and accurate in every way and I am aware of the penalties against providing false information as per s.184 (2) of the *Environmental Protection Act*.
- I have been authorized to act on behalf of the company identified in this form for the purpose of providing this notification of exceedance under the Regulation to the Ministry of the Environment and Climate Change.
- I have used the most recent notification form (as obtained from the Ministry Internet site at http://www.ontario.ca/environment-and-energy/rules-air-quality-and-pollution or from my local Ministry District Office and I have included all necessary information required by the Regulation and identified on this form.

Name of Signing Authority	Title
Garnet Cornell	Environment Superintendent

Telephone Number	Fax Number	Mobile Number	Email Address
807 234-8170 ext.		807 276-0106	Garnet.Cornell@newgold.com

Signature	Date (yyyy/mm/dd)
	2021/08/13

Address Information

Same as Site Physical Address? ☑ Yes ☐ No (If no, please provide signing authority mailing address information below)

Civic Address

Unit Number	Street Number	Street Name	PO Box
	1361	Roen Road	

Delivery Designator: If signing authority mailing address is a Rural Route, Suburban Service, Mobile Route or General Delivery (i.e., RR#3)

Municipality/Unorganized Township or Territory	County/District	Province/State	Country	Postal Code
Chapple				P0W 1A0

Table 1 - Information About Modelled Exceedance

Contaminant [a]	CAS [b] Number	Air Dispersion Model Used (include version number)	Maximum POI [c] Concentration (µg/m³)	Averaging Period (hours)(minute/ hour/day/ annual)	Ministry Limit (µg/m³) or URT (µg/m³)	Limiting Effect	Schedule 2, Schedule 3, Guideline, Schedule 6 URT or Other (specify) [d]	Benchmark 1, Benchmark 2, or No Benchmark [e] (specify)	Percentage of Ministry Limit or URT

Provide additional information as needed (e.g. Location of Maximum POI Concentrations (e.g. UTM, street address, land use at Maximum POI if known, etc.)

Notes:

(a) Proper Chemical Name should be given (Abbreviations, acronyms, numeric codes, trade names and mixtures NOT ACCEPTABLE).

(b) CAS Number : Chemical Abstracts Services Number (UNIQUE Identifier for a chemical)

(c) POI Concentration : Point of Impingement Concentration

(d) Schedule 2 = section 19 applies; Schedule 3 = section 20 applies

(e) If a B2 value is exceeded, the regulation requires potential adverse effects to be assessed. If it is determined that an adverse effect may occur for the contaminant in question, this should be included in the table

Table 2 - Information About Measured Exceedance

Contaminant [a]	CAS [b] Number	Type of Assessment (Measurement Method)	Maximum POI [c] Concentration (µg/m³)	Averaging Period (minute/ hour/day/ annual)	Ministry Limit (µg/m3) or URT (µg/m³)	Limiting Effect	Schedule 2, Schedule 3, Guideline, Schedule 6 URT, or Other (specify)	Benchmark 1, Benchmark 2, or No Benchmark [d] (specify)	Percentage of Ministry Limit or URT
Total dustfall at Tait Rd.	N/A	Passive	15.96 g/m2/30d	30 days	7 g/m2/30d	Soiling	Schedule 3	B1	228.00%
Total dustfall at NW	N/A	Passive	11.40 g/m2/30d	30 days	7 g/m2/30d	Soiling	Schedule 3	B1	162.86%

* For additional measurement locations / sampling times, please include additional tables

** If you are reporting more than one exceedence, include the time of the exceedence in the contaminant column

Notes:

(a) Proper Chemical Name should be given (Abbreviations, acronyms, numeric codes, trade names and mixtures NOT ACCEPTABLE).

(b) CAS Number : Chemical Abstracts Services Number (UNIQUE Identifier for a chemical)

(c) POI Concentration : Point of Impingement Concentration

(d) Schedule 2 = section 19 applies; Schedule 3 = section 20 applies

(e) If a B2 value is exceeded, the regulation requires potential adverse effects to be assessed. If it is determined that an adverse effect may occur for the contaminant in question, this should be included in the table

APPENDIX C:
LABORATORY RESULTS

Station	Date and Time	Sampler	Ambient Temp	Ambient Pressure	TSP Sample ID	TSP Filter OLD	TSP Filter NEW	TSP Start	TSP Stop	TSP Run Date	TSP Flow Run	TSP Flow Next	Slope	Intercept	Total TSP Flow Calc (m^3)	TSP Next Run Date	TSP Comment
North	2021-06-29 15:03	Sarah Flesher	25.1	728	North-TSP-370	L2574304-25(741624)	L2574304-22(741620)	1496.28	1520.62	2021-06-27 12:00	38	38	17.985	18.5876	1529.460845	2021-07-03 12:00	
South	2021-06-29 14:30	Sarah Flesher	25.8	728	South-TSP-370	L2574304-26(741625)	L2574304-24(741623)	1586.34	1610.58	2021-06-27 12:00	43	44	25.7261	14.5088	1567.696633	2021-07-03 12:00	
Northwest	2021-06-29 13:45	Sarah Flesher	24.4	731	Northwest-TSP-370	L2574304-27(741626)	L2574304-23(741622)	734.44	758.51	2021-06-27 12:00	41	40	29.2657	7.7868	1610.027102	2021-07-03 12:00	
South	2021-06-23 15:05	Sarah Flesher	20.3	720	South-TSP-369	L2574304-29(741628)	L2574304-26(741625)	1563.77	1586.34	2021-06-21 12:00	44	44	25.7261	14.5088	1547.905021	2021-06-27 12:00	
Northwest	2021-06-23 14:35	Sarah Flesher	21.2	723	Northwest-TSP-369	L2574304-30(741629)	L2574304-27(741626)	710.91	734.44	2021-06-21 12:00	43	40	29.2657	7.7868	1702.615736	2021-07-27 12:00	
North	2021-06-23 11:30	Sarah Flesher	22.3	720	North-TSP-369	L2574304-28(741627)	L2574304-25(741624)	1471.57	1496.78	2021-06-21 12:00	38	38	17.985	18.5876	1634.861703	2021-06-27 12:00	
Northwest	2021-06-16 12:25	Kari Larson	25.4	729	Northwest-TSP-368	L2574304-3(741601)	L2574304-30(741629)	687.42	710.91	2021-06-15 12:00	50	40	29.2657	7.7868	**2021.328927**	2021-06-21 12:00	
South	2021-06-16 12:05	Kari Larson	26.9	727	South-TSP-368	L2574304-4(741602)	L2574304-29(741628)	1540.48	1563.77	2021-06-15 12:00	42	44	25.7261	14.5088	1475.689591	2021-06-21 12:00	
North	2021-06-16 11:35	Kari Larson	26.9	727	North-TSP-368	L2574304-2(741600)	L2574304-28(741627)	1448.06	1471.57	2021-06-15 12:00	38	38	17.985	18.5876	1503.167186	2021-06-21 12:00	
North	2021-06-11 15:15	Sarah Flesher	23.8	719	North-TSP-367	L2550537-33(741437)	L2574304-2(741600)	1424.56	1448	2021-06-09 12:00	39	38	17.985	18.5876	1537.740723	2021-06-15 12:00	
South	2021-06-11 15:00	Sarah Flesher	24.9	719	South-TSP-367	L2550537-34(741438)	L2574304-4(741602)	1516.63	1540.48	2021-06-09 12:00	42	44	25.7261	14.5088	1480.132869	2021-06-15 12:00	
Northwest	2021-06-11 14:30	Sarah Flesher	24.1	722	Northwest-TSP-367	L2550537-35(741439)	L2574303-3(741601)	662.66	687.42	2021-06-09 12:00	42	40	29.2657	7.7868	1697.71071	2021-06-15 12:00	
Northwest	2021-06-04 9:00	Sarah Flesher	25.2	721	Northwest-TSP-366	L2550537-30(741341)	L2550537-35(741439)	639.48	662.66	2021-06-03 12:00	40	40	29.2657	7.7868	1494.328403	2021-06-09 12:00	
South	2021-06-04 8:30	Sarah Flesher	24.7	718	South-TSP-366	L2550537-34(741438)	L2550537-34(741438)	1493	1516.93	2021-06-03 12:00	44	44	25.7261	14.5088	1592.072557	2021-06-09 12:00	
North	2021-06-04 8:00	Sarah Flesher	21.4	719	North-TSP-366	L2550537-31(741435)	L2550537-33(741437)	1401.24	1424.58	2021-06-03 12:00	40	38	17.985	18.5876	1606.794064	2021-06-09 12:00	
Northwest	2021-06-01 14:37	Sarah Flesher	20	732	Northwest-TSP-365	L2550537-29(741433)	L255050537-30(741434)	616.18	639.48	2021-06-28 12:00	40	40	29.2657	7.7868	1548.895239	2021-06-03 12:00	
South	2021-06-01 14:15	Sarah Flesher	19.8	729	South-TSP-365	L2550537-28741432)	L2550537-32(741436)	1470.16	1493	2021-05-28 12:00	44	44	25.7261	14.5088	1587.555198	2021-06-03 12:00	
North	2021-06-01 13:30	Sarah Flesher	19.8	729	North-TSP-365	L2550557-27(741431)	L2550537-31(741435)	1377.7	1401.24	2021-05-28 12:00	38	38	17.985	18.5876	1554.154723	2021-06-03 12:00	
Northwest	2021-05-25 8:26	Kari Larson	23.6	716	Northwest-TSP-364	L2550537-26(741430)	L2550537-29(741433)	591.24	616.18	2021-05-22 12:00	40	40	29.2657	7.7868	1642.214748	2021-05-28 12:00	
South	2021-05-25 8:23	Kari Larson	25.1	714	South-TSP-364	L2550537-25(741429)	L2550537-28(741432)	1446.54	1470.16	2021-05-22 12:00	44	44	25.7261	14.5088	1609.677334	2021-05-28 12:00	
North	2021-05-25 8:17	Kari Larson	24.5	714	North-TSP-364	L2550537-24(741428)	L2550537-27(741431)	1353.99	1377.7	2021-05-22 12:00	36	38	17.985	18.5876	**1362.700833**	2021-05-28 12:00	
South	2021-05-19 14:57	Sarah Flesher	29.1	727	South-TSP-363	L2550537-22(741426)	L2550537-25(741429)	1423.54	1446.54	2021-05-16 12:00	44	44	25.7261	14.5088	1554.13411	2021-05-22 12:00	
Northwest	2021-05-19 14:57	Sarah Flesher	28.8	736	Northwest-TSP-363	L255037-23(741427)	L2550537-26(741430)	567.76	591.24	2021-05-22 12:00	40	40	29.2657	7.7868	1536.850029	2021-05-28 12:00	
North	2021-05-19 14:55	Sarah Flesher	27.9	728	North-TSP-363	L2550537-21(741425)	L2550537-24(741428)	1329.83	1353.99	2021-05-16 12:00	38	38	17.985	18.5876	1534.796309	2021-05-22 12:00	
Northwest	2021-05-13 11:20	Sarah Flesher	19.7	734	Northwest-TSP-362	L2550537-20(741424)	L2550537-23(741427)	544	567.76	2021-05-10 12:00	40	40	29.2657	7.7868	1606.300511	2021-05-16 12:00	
South	2021-05-13 10:45	Sarah Flesher	19.6	731	South-TSP-362	L2550537-19(741423)	L2550537-22(741426)	1400.38	1423.54	2021-05-10 12:00	44	44	25.7261	14.5088	1629.838213	2021-05-16 12:00	
North	2021-05-13 10:30	Sarah Flesher	17.8	732	North-TSP-362	L2550537-18(741422)	L2550537-21(741425)	1306.02	1329.83	2021-05-10 12:00	38	38	17.985	18.5876	1595.423543	2021-05-16 12:00	
South	2021-05-06 15:40	Sarah Flesher	10.5	730	South-TSP-361	L2550537-1(741421)	L2550537-19(741423)	1376.8	1400.3	2021-05-04 12:00	44	44	25.7261	14.5088	1641.16938	2021-05-10 12:00	
Northwest	2021-05-06 15:15	Sarah Flesher	10.7	733	Northwest-TSP-361	L2550537-15(741419)	L2550537-20(741424)	519.53	544	2021-05-04 12:00	37	40	29.2657	7.7868	1492.86427	2021-05-10 12:00	
North	2021-05-06 14:15	Sarah Flesher	10	730	North-TSP-361	L2550537-16(741420)	L2550537-18(741422)	1282.23	1306.02	2021-05-04 12:00	40	38	17.985	18.5876	1736.114232	2021-05-10 12:00	
Northwest	2021-04-29 8:36	Sarah Flesher			Northwest-TSP-360	L2550537-14(741418)	L2550537-15(741419)	495.66	519.53	2021-04-29 12:00	42	40	30.8378	6.2006	1668.683088	2021-05-04 12:00	
South	2021-04-29 8:32	Sarah Flesher	11	726	South-TSP-360	L2550537-13(741417)	L2550537-17(741421)	1353.3	1376.8	2021-05-04 12:00	44	44	25.7261	14.5088	1613.746896	2021-05-04 12:00	
North	2021-04-29 8:28	Sarah Flesher	9.3	726	North-TSP-360	L2550537-12(741416)	L2550537-16(741420)	1258.22	1282.23	2021-04-28 12:00	39	38	17.985	18.5876	1640.913832	2021-05-04 12:00	
Northwest	2021-04-26 14:30	Kari Larson	5	723	Northwest-TSP-359	L2550537-10(741414)	L2550537-14(741418)	472.71	495.66	2021-04-26 12:00	42	40	30.8378	6.2006	1606.475646	2021-04-28 12:00	
South	2021-04-26 13:30	Kari Larson	5.5	718	South-TSP-359	L2550537-9(741413)	L2550537-13(741417)	1329.42	1353.3	2021-04-22 12:00	42	44	25.7261	14.5088	1530.343429	2021-04-28 12:00	
North	2021-04-26 13:05	Kari Larson			North-TSP-359	L2550537-11(741415)	L2550537-12(741416)	1235.22	1258.22	2021-04-22 12:00	38	38	17.985	18.5876		2021-04-28 12:00	
Northwest	2021-04-20 11:11	Sarah Flesher	2.7	730	Northwest-TSP-358	L2550537-1(741405)	L2550537-10(741414)	449.23	472.41	2021-04-16 12:00	22	40	30.8378	6.2006	**727.6253364**	2021-04-22 12:00	
South	2021-04-20 11:04	Sarah Flesher	2.8	727	South-TSP-358	L2550537-7(741411)	L2550537-9(741413)	1305.74	1329.42	2021-04-16 12:00	36	44	25.7261	14.5088	**1209.354936**	2021-04-22 12:00	
North	2021-04-19 13:45	Sarah Flesher	2.2	727	North-TSP-358	L2550537-8(741412)	L2550537-11(741415)	1212.43	1235.22	2021-04-19 12:00	34	38	17.985	18.5876	**1206.14035**	2021-04-16 12:00	
North	2021-04-12 14:55	Nathan Baird	9	719	North-TSP-357	L255037-3(741407)	L2550537-8(741412)	1188.11	1212.43	2021-04-10 12:00	36	38	17.985	18.5876	**1431.696786**	2021-04-16 12:00	
South	2021-04-12 14:30	Nathan Baird	10	719	South-TSP-357	L2550537-4(741408)	L2550537-7(741411)	1280.56	1305.74	2021-04-10 12:00	42	44	25.7261	14.5088	1628.681741	2021-04-16 12:00	
Northwest	2021-04-12 14:00	Nathan Baird	10	722	Northwest-TSP-357	L2550537-1(741405)	L2550537-6(741410)	425.41	449.23	2021-04-10 12:00	38	40	30.8378	6.2006	1489.846943	2021-04-16 12:00	
Northwest	2021-04-06 14:21	Sarah Flesher	19.9	726	Northwest-TSP-356	L2550537-5(741409)	L2550537-1(741409)	401.84	425.41	2021-04-04 12:00	42	40	30.8378	6.2006	1646.688784	2021-04-05 12:00	
North	2021-04-05 13:25	Kari Larson	20.6	718	North-TSP-356	L2543758-34(741324)	L2550537-3(741407)	1164.69	1188.11	2021-04-08 7:31	38	38	17.985	18.5876	1513.510405	2021-04-08 7:42	
South	2021-04-04 13:55	Kari Larson	20.6	717	South-TSP-356	L2543758-35(741325)	L2550537-4(741408)	1256.85	1280.56	2021-04-04 12:00	43	44	25.7261	14.5088	1572.929563	2021-04-10 12:00	

PM25 Sample ID	PM25 Filter Old	PM25 Filter New	PM25 ET Hours	PM25 TV	PM25 Start	PM25 Stop	PM25 Q VLPM	PM25 Q Avg	PM25 CV	PM25 Temp Avg	PM25 BP Avg	PM25 Next Run Date	PM25 Comment
North-PM2.5-370	L2586151-8(A032)	L2586151-1(A014)	23.59	24.03	2021-06-27 0:00	2021-06-28 0:00	16.7	16.7	0.55	19.3	723	2021-07-03 12:00	
South-PM2.5-370	L2586151-15(A049)	L2586151-2(A017)	23.59	24.02	2021-06-27 0:00	2021-06-28 0:00	16.7	16.71	0.34	20.8	723	2021-07-03 12:00	
Northwest-PM2.5-370	L2586151-9(A065)	L2586151-3(A025)	24	24.05	2021-06-27 0:00	2021-06-28 0:00	16.7	16.7	0	20	726	2021-07-03 12:00	
South-PM2.5-369	L2586151-11(A037)	L2586151-15(A049)	23.59	24.02	2021-06-21 0:00	2021-06-22 0:00	16.7	16.7	0.38	11.2	722	2021-06-27 12:00	
Northwest-PM2.5-369	L2586151-12 (A065)	L2586151-9 (A033)	24	24.05	2021-06-21 0:00	2021-06-22 0:00	16.7	16.71	0	10.6	726	2021-06-27 12:00	
North-PM2.5-369	L2586151-7(A030)	L2586151-8(A032)	23.59	24.03	2021-06-21 0:00	2020-07-22 0:00	16.7	16.71	0.52	10.1	723	2021-06-27 12:00	
Northwest-PM2.5-368	L2574304-43(A042)	L258151-12(A065)	24	24.05	2021-06-15 0:00	2021-06-16 0:00	16.7	16.71	0	17.6	734	2021-06-16 12:00	
South-PM2.5-368	L2574304-42(A001)	L2586151-11(A037)	23.59	24	2021-06-15 0:00	2021-06-16 0:00	16.7	16.71	0.39	18.1	731	2021-06-21 12:00	
North-PM2.5-368	L2574304-33(A005)	L2586151-7(A030)	23.59	24.03	2021-06-15 0:00	2021-06-16 0:00	16.7	16.71	0.47	16.6	729	2021-06-21 12:00	
North-PM2.5-367	L2565748-6(A019)	L2574304-33(A005)	23.59	24.03	2021-06-09 0:00	2021-06-10 0:00	16.7	16.71	0.58	22.5	725	2021-06-15 12:00	
South-PM2.5-367	L2574304-31(A001)	L2574303-42(A041)	23.59	24.01	2021-06-09 0:00	2021-06-10 0:00	16.7	16.7	0.34	23.6	725	2021-06-15 12:00	
Northwest-PM2.5-367	L2574304-32(A003)	L2574304-43(A042)	24	24.05	2021-06-15 0:00	2021-06-16 0:00	16.8	16.7	0	23.2	728		
Northwest-PM2.5-366	L2574304-39(A022)	L2574304-32(A003)	24	24.05	2021-06-03 0:00	2021-06-04 0:00	16.7	16.7	0	20.9	721	2021-06-09 12:00	
South-PM2.5-366	L2574303-35(A007)	L2574304-31(A001)	23.59	23.99	2021-06-03 0:00	2021-06-04 0:00	16.7	16.69	0.53	21.3	718	2021-06-09 12:00	
North-PM2.5-366	L2574304-40(A023)	L2565748-6(A019)	23.59	24.03	2021-06-03 0:00	2021-06-04 0:00	16.7	16.71	0.51	20.2	719	2021-06-09 12:00	
Northwest-PM2.5-365	L2574304-38(A016)	L2574304-39(A022)	24	24.05	2021-05-28 0:00	2021-05-29 0:00	16.7	16.7	0	11.4	733	2021-06-03 12:09	
South-PM2.5-365	L2574304-37(A010)	L2574304-35(A007)	23.59	24.03	2021-05-28 0:00	2021-06-29 0:00	16.7	16.71	0.43	10	732	2021-06-03 12:00	
North-PM2.5-365	L2565748-16(A040)	L2574304-40(A023)	23.59	24.02	2021-05-28 0:00	2021-05-29 7:23	16.7	16.7	0.36	8.4	732	2021-06-03 7:24	
Northwest-PM2.5-364	L2565748-13(A035)	L2574304-38(A016)	24	24.03	2021-05-22 0:00	2021-05-23 0:00	16.7	16.7	0	15.4	732	2021-05-28 12:00	
South-PM2.5-364	L2565748-14(A038)	L2574304-37(A010)	23.59	24.01	2021-05-22 0:00	2021-05-23 0:00	16.7	16.71	0.4	16.4	729	2021-05-28 12:00	
North-PM2.5-364	L2565748-16(A040)	L2574304-36(A008)	23.59	24.03	2021-05-22 0:00	2021-05-23 0:00	16.7	16.71	0.41	15.8	729	2021-05-28 12:00	
South-PM2.5-363	L2565748-5(A018)	L2565748-14(A038)	23.59	24	2021-05-16 0:00	2021-05-17 0:00	16.7	16.7	0.38	17.7	724	2021-05-22 12:00	
Northwest-PM2.5-363	L2565748-5(A018)	L2565748-13(A35)	24	24.05	2021-05-22 0:00	2021-05-23 0:00	16.7	16.7	0	16.6	728	2021-05-28 12:00	
North-PM2.5-363	L2565748-4(A015)	L2565748-16(A040)	23.59	24.03	2021-05-16 0:00	2021-05-17 0:00	16.7	16.71	0.52	16.9	725	2021-05-22 12:00	
Northwest-PM2.5-362	L2565748-8(A021)	L2565748-2(A012)	24	24.05	2021-05-10 0:00	2021-05-11 0:00	16.7	16.7	0	4.9	736	2021-05-16 12:00	
South-PM2.5-362	L2565748-7(A020)	L2565748-5(A018)	23.59	24.01	2021-05-10 0:00	2021-05-11 0:00	16.7	16.7	0.36	5.7	733	2021-05-16 12:00	
North-PM2.5-362	L2565748-1(A011)	L2565748-4(A015)	23.59	24.03	2021-05-10 0:00	2021-05-11 0:00	16.7	16.71	0.45	4.5	733	2021-05-16 12:00	
South-PM2.5-361	L2565748-15(A039)	L2565748-7(A020)	23.59	24.03	2021-05-04 0:00	2021-05-05 0:00	16.7	16.71	0.49	5.9	726	2021-05-10 12:00	
Northwest-PM2.5-361	L2565748-12(A034)	L2565745-8(A021)	24	24.05	2021-05-04 0:00	2021-05-05 0:00	16.7	16.7	0	5	730	2021-05-10 12:00	
North-PM2.5-361	L2565748-11(A031)	L2565748-1(A011)	23.59	24.03	2021-05-04 0:00	2021-05-05 0:00	16.7	16.71	0.46	5.2	726	2021-05-10 12:00	
Northwest-PM2.5-360	L2565748-8(A027)	L2565748-12(A034)	24	24.05	2021-04-28 0:00	2021-04-29 0:00	16.7	16.7	0	10.3	727	2021-05-04 12:00	
South-PM2.5-360	L2565748-10(A028)	L2550537-17(741421)	23.59	24.02	2021-04-22 0:00	2021-04-23 0:00	16.7	16.61	0.4	11.5	724	2021-05-04 12:00	
North-PM2.5-360	L265748-11(A014)	L2565748-3(A014)	23.59	24.03	2021-04-28 0:00	2021-04-29 0:00	16.7	16.71	0.5	10.6	726	2021-05-04 12:00	
Northwest-PM2.5-359	L2557040-13(A036)	L256578-8(A027)	24	24.05	2021-04-22 0:00	2021-04-23 0:00	16.7	16.7	0	8.5	724	2021-04-28 12:00	
South-PM2.5-359	L2557040-14(A037)	L2565748-10(A028)	23.59	24.03	2021-04-22 0:00	2021-04-23 0:00	16.7	16.7	0.41	9.5	720	2021-04-28 12:00	
North-PM2.5-359	L2557040-25(A049)	L2565748-3(A014)			2021-04-22 0:00	2021-04-23 0:00						2021-04-28 12:00	Did not run. Set to run May 22 rather than April 22
Northwest-PM2.5-358	L2557040-15(A017)	L2557040.13(A036)	24	24.05	2021-04-16 0:00	2021-04-17 0:00	16.7	16.7	0	5.5	732	2021-04-22 12:00	
South-PM2.5-358	L25570-16(A025)	L2557040-14(A037)	23.59	23.98	2021-04-16 0:00	2021-04-17 0:00	16.7	16.68	0.4	6.5	729	2021-04-22 12:00	
North-PM2.5-358	L2557040-25(A049)	L2557040-12(A033)	23.59	2402	2021-04-16 0:00	2021-04-17 0:00	16.7	16.7	0.43	5.4	729	2021-04-22 12:00	
North-PM2.5-357	L2557940-25(A048)	L25507040-25(A049)	23.59	24.03	2021-04-10 0:00	2021-04-11 0:00	16.7	16.71	0.49	5.3	719	2021-04-16 12:00	
South-PM2.5-357	L2557040-11(A032)	L2557040-16(A025)	23.59	23.98	2021-04-10 0:00	2021-04-11 0:00	16.7	16.68	0.57	5.7	719	2021-04-16 12:00	
Northwest-PM2.5-357	L2557040-10(A036)	L2557040-15(A017)	24	24.05	2021-04-10 0:00	2021-04-11 0:00	16.7	16.7	0	5	722	2021-04-16 12:00	
Northwest-PM2.5-356	L2557040-9(A026)	L2557040-10(A036)	24	24.05	2021-04-04 0:00	2021-04-05 0:00	16.7	16.7	0	10.6	727	2021-04-10 12:00	
North-PM2.5-356	L2557040-22(A045)	L2557040-25(A048)	23.59	24.04	2021-04-04 7:45	2021-04-05 7:47	16.7	16.72	0.51	11.5	724	2021-04-10 12:00	
South-PM2.5-356	L2557040-23(A026)	L2557040-11(A032)	23.59	24.03	2021-04-04 0:00	2021-04-05 0:00	16.7	16.71	0.42	11.5	724	2021-04-10 12:00	

ALS Environmental

BV Labs Job Number: C131164
Report Date: 2021/05/26

Client Project #: TC111504.2015.6
Site Location: NEW GOLD - EMO, ON
Your P.O. #: 4500022601
Sampler Initials: SF

RESULTS OF CHEMICAL ANALYSES OF AIR

BV Labs ID		ZT7532	ZT7533		
Sampling Date		2021-03-31	2021-03-31		
	UNITS	**RRP SOUTH**	**RRP NORTH**	**RDL**	**QC Batch**
Passive Monitoring					
Calculated NO2	ppb	1.4	0.1	0.1	A224348
Calculated SO2	ppb	<0.1	<0.1	0.1	A223782

RDL = Reportable Detection Limit

Results relate only to the items tested.

Report Date: 2021/05/26

ALS Environmental
Attention: Claire Kocharakkal
Client Project #: TC111504.2015.6
Your P.O. #:4500022601
Site Location: NEW GOLD - EMO, ON

Quality Assurance Report
BV Labs Job Number: C131164

QA/QC Ba	Init	QC Type	Parameter	Date Analy	Value	Recovery	UNITS	QC Limits
A223782	OZ	Spiked Blank	Calculated SO2			99	%	90 - 110
A223782	OZ	Method Blank	Calculated SO2		<0.1		ppb	
A224348	XSZ	Spiked Blank	Calculated NO2			100	%	90 - 110
A224348	XSZ	Method Blank	Calculated NO2		<0.1		ppb	

Spiked Blank: A blank matrix sample to which a known amount of the analyte, usually from a second source, has been added. Used to evaluate method accuracy.
Method Blank: A blank matrix containing all reagents used in the analytical procedure. Used to identify laboratory contamination.

BV Labs Job Number: C140330
Report Date: 2021/06/21

ALS Environmental
Client Project #: TC111504.2015.6
Site Location: NEW GOLD - EMO, ON
Your P.O. #: 4500022601
Sampler Initials: SF

RESULTS OF CHEMICAL ANALYSES OF AIR

BV Labs ID		ZY7689	ZY7690		
Sampling Date		2021-05-03 12:00	2021-05-03 12:00		
	UNITS	**RRP SOUTH**	**RRP NORTH**	**RDL**	**QC Batch**
Passive Monitoring					
Calculated NO2	ppb	0.8	0.5	0.1	A252681
Calculated SO2	ppb	0.3	0.5	0.1	A255629

RDL = Reportable Detection Limit

Results relate only to the items tested.

Report Date: 2021/06/21

ALS Environmental
Attention: Claire Kocharakkal
Client Project #: TC111504.2015.6
Your P.O. #:4500022601
Site Location: NEW GOLD - EMO, ON

Quality Assurance Report
BV Labs Job Number: C140330

QA/QC Ba	Init	QC Type	Parameter	Date Analy	Value	Recovery	UNITS	QC Limits
A252681	YL6	Spiked Blank	Calculated NO2			100	%	90 - 110
A252681	YL6	Method Blank	Calculated NO2		<0.1		ppb	
A255629	OZ	Spiked Blank	Calculated SO2			102	%	90 - 110
A255629	OZ	Method Blank	Calculated SO2		<0.1		ppb	

Spiked Blank: A blank matrix sample to which a known amount of the analyte, usually from a second source, has been added. Used to evaluate method accuracy.
Method Blank: A blank matrix containing all reagents used in the analytical procedure. Used to identify laboratory contamination.

ALS Environmental

BV Labs Job Number: C149427
Report Date: 2021/07/20

Client Project #: TC111504.2015.6
Site Location: NEW GOLD - EMO, ON
Your P.O. #: 4500022601
Sampler Initials: SF

RESULTS OF CHEMICAL ANALYSES OF AIR

BV Labs ID		ABP515	ABP516		
Sampling Date		2021-05-31	2021-05-31		
	UNITS	**RRP SOUTH**	**RRP NORTH**	**RDL**	**QC Batch**
Passive Monitoring					
Calculated NO2	ppb	0.8	0.4	0.1	A284574
Calculated SO2	ppb	0.4	0.2	0.1	A284489

RDL = Reportable Detection Limit

Results relate only to the items tested.

Report Date: 2021/07/20

ALS Environmental
Attention: Claire Kocharakkal
Client Project #: TC111504.2015.6
Your P.O. #:4500022601
Site Location: NEW GOLD - EMO, ON

Quality Assurance Report
BV Labs Job Number: C149427

QA/QC Ba	Init	QC Type	Parameter	Date Analy	Value	Recovery	UNITS	QC Limits
A284489	OZ	Spiked Blank	Calculated SO2			100	%	90 - 110
A284489	OZ	Method Blank	Calculated SO2		<0.1		ppb	
A284574	XSZ	Spiked Blank	Calculated NO2			101	%	90 - 110
A284574	XSZ	Method Blank	Calculated NO2		<0.1		ppb	

Spiked Blank: A blank matrix sample to which a known amount of the analyte, usually from a second source, has been added. Used to evaluate method accuracy.
Method Blank: A blank matrix containing all reagents used in the analytical procedure. Used to identify laboratory contamination.

Report To	Sarah Flesher, New Gold Inc. Rainy River Project 5967 Highway 11/71 P.O. Box 5 Emo, ON P0W 1E0	**Date Received** **Report Date** **Report Revision** **Version**	10-May-2021 08:30 4-Jun-2021 17:27 1 FINAL
Client Phone	807-234-8200		

Certificate of Analysis

Lab Work Order #	L2585978
Project P.O. #	4500050093
Job Reference	NEW GOLD RRP
Legal Site Description	
C of C Numbers	

Case Narrative/Comments

Work Order Qualifiers:

Temperature - 20.9ºC °

Claire Kocharakkal, B.Sc.
Account Manager

[This report shall not be reproduced except in full without the written authority of the Laboratory.]

Sample Summary L2585978

Job Reference	NEW GOLD RRP
Report To	Sarah Flesher, New Gold Inc. Rainy River Project
Date Received	10-May-2021 8:30
Report Date	4-Jun-2021 17:27
Report Version	1

Sample Details

ALS Sample ID	Client Sample ID	Matrix	Date Sampled	Time Sampled	Qualifier
L2585978-1	SOUTH-TSP-356	Hi Vol Filter	04-Apr-21	00:00	
L2585978-2	SOUTH-TSP-357	Hi Vol Filter	10-Apr-21	00:00	
L2585978-3	SOUTH-TSP-358	Hi Vol Filter	16-Apr-21	00:00	
L2585978-4	SOUTH-TSP-359	Hi Vol Filter	22-Apr-21	00:00	
L2585978-5	SOUTH-TSP-360	Hi Vol Filter	28-Apr-21	00:00	
L2585978-6	NORTH-TSP-356	Hi Vol Filter	04-Apr-21	00:00	
L2585978-7	NORTH-TSP-357	Hi Vol Filter	10-Apr-21	00:00	
L2585978-8	NORTH-TSP-358	Hi Vol Filter	16-Apr-21	00:00	
L2585978-9	NORTH-TSP-359	Hi Vol Filter	22-Apr-21	00:00	
L2585978-10	NORTH-TSP-360	Hi Vol Filter	28-Apr-21	00:00	
L2585978-11	NORTHWEST-TSP-356	Hi Vol Filter	04-Apr-21	00:00	
L2585978-12	NORTHWEST-TSP-357	Hi Vol Filter	10-Apr-21	00:00	
L2585978-13	NORTHWEST-TSP-358	Hi Vol Filter	16-Apr-21	00:00	
L2585978-14	NORTHWEST-TSP-359	Hi Vol Filter	22-Apr-21	00:00	
L2585978-15	NORTHWEST-TSP-360	Hi Vol Filter	28-Apr-21	00:00	
L2585978-16	SOUTH-PM2.5-356	47mm Filter	04-Apr-21	00:00	
L2585978-17	SOUTH-PM2.5-357	47mm Filter	10-Apr-21	00:00	
L2585978-18	SOUTH-PM2.5-358	47mm Filter	16-Apr-21	00:00	
L2585978-19	SOUTH-PM2.5-359	47mm Filter	22-Apr-21	00:00	
L2585978-20	SOUTH-PM2.5-360	47mm Filter	28-Apr-21	00:00	
L2585978-21	NORTH-PM2.5-356	47mm Filter	04-Apr-21	00:00	
L2585978-22	NORTH-PM2.5-357	47mm Filter	10-Apr-21	00:00	
L2585978-23	NORTH-PM2.5-358	47mm Filter	16-Apr-21	00:00	
L2585978-24	NORTH-PM2.5-359	47mm Filter	22-Apr-21	00:00	
L2585978-25	NORTH-PM2.5-360	47mm Filter	28-Apr-21	00:00	
L2585978-26	NORTHWEST-PM2.5-356	47mm Filter	04-Apr-21	00:00	
L2585978-27	NORTHWEST-PM2.5-357	47mm Filter	10-Apr-21	00:00	
L2585978-28	NORTHWEST-PM2.5-358	47mm Filter	16-Apr-21	00:00	
L2585978-29	NORTHWEST-PM2.5-359	47mm Filter	22-Apr-21	00:00	
L2585978-30	NORTHWEST-PM2.5-360	47mm Filter	28-Apr-21	00:00	
L2585978-31	NOP1-DUSTFALL-4	Dustfall	03-May-21	00:00	
L2585978-32	CP1-DUSTFALL-4	Dustfall	03-May-21	00:00	
L2585978-33	WCP1-DUSTFALL-4	Dustfall	03-May-21	00:00	
L2585978-34	GH1-DUSTFALL-4	Dustfall	03-May-21	00:00	
L2585978-35	SPP1-DUSTFALL-17	Dustfall	07-Apr-21	00:00	
L2585978-36	SPP1-DUSTFALL-18	Dustfall	14-Apr-21	00:00	
L2585978-37	SPP1-DUSTFALL-19	Dustfall	21-Apr-21	00:00	
L2585978-38	SPP1-DUSTFALL-20	Dustfall	28-Apr-21	00:00	
L2585978-39	DUSTFALL-GALLINGER ROAD	Dustfall	03-May-21	00:00	
L2585978-40	DUSTFALL-TAIT ROAD (SOUTH)	Dustfall	03-May-21	00:00	
L2585978-41	DUSTFALL-NORTHWEST	Dustfall	03-May-21	00:00	
L2585978-42	SUBLETS TO MAXXAM				
L2585978-43	SPP1-DUSTFALL-21	Dustfall			

Results Summary L2585978

Job Reference NEW GOLD RRP
Report To Sarah Flesher, New Gold Inc. Rainy River Project
Date Received 10-May-2021 8:30
Report Date 4-Jun-2021 17:27
Report Version 1

Client Sample ID			SOUTH-TSP-356	SOUTH-TSP-357	SOUTH-TSP-358	SOUTH-TSP-359	SOUTH-TSP-360	NORTH-TSP-356	NORTH-TSP-357	NORTH-TSP-358	NORTH-TSP-359	NORTH-TSP-360	NORTHWEST-TSP-356	NORTHWEST-TSP-357
Date Sampled			4-Apr-2021 0:00	10-Apr-2021 0:00	16-Apr-2021 0:00	22-Apr-2021 0:00	28-Apr-2021 0:00	4-Apr-2021 0:00	10-Apr-2021 0:00	16-Apr-2021 0:00	22-Apr-2021 0:00	28-Apr-2021 0:00	4-Apr-2021 0:00	10-Apr-2021 0:00
ALS Sample ID			L2585978-1	L2585978-2	L2585978-3	L2585978-4	L2585978-5	L2585978-6	L2585978-7	L2585978-8	L2585978-9	L2585978-10	L2585978-11	L2585978-12
Parameter	Lowest Detection Limit	Units	Filter	Filter	Filter	Filter	Filter	Filter	Filter	Filter	Filter	Filter	Filter	Filter
Particulates (Filter)														
Total particulate	15	ug	125000	22100	53700	128000	54300	34600	10000	8900	52000	36800	114000	12400
Total Metals (Filter)														
Arsenic (As)	3.0	ug	<3.0	<3.0	<3.0	<3.0	<3.0	<3.0	<3.0	<3.0	<3.0	<3.0	<3.0	<3.0
Cadmium (Cd)	2.0	ug	<2.0	<2.0	<2.0	<2.0	<2.0	<2.0	<2.0	<2.0	<2.0	<2.0	<2.0	<2.0
Chromium (Cr)	5.0	ug	9.7	<5.0	<5.0	6.5	<5.0	5.9	<5.0	<5.0	<5.0	<5.0	7.4	<5.0
Cobalt (Co)	2.0	ug	<2.0	<2.0	<2.0	2.5	<2.0	<2.0	<2.0	<2.0	<2.0	<2.0	<2.0	<2.0
Copper (Cu)	4.0	ug	105	158	156	119	134	138	222	221	105	186	91.8	73.4
Iron (Fe)	20	ug	2700	590	1100	4200	1140	563	140	164	972	635	3130	185
Lead (Pb)	3.0	ug	6.3	<3.0	3.2	3.4	<3.0	<3.0	<3.0	<3.0	3.3	<3.0	7.8	<3.0
Manganese (Mn)	1.0	ug	86.4	18.2	42.7	107	31.0	15.9	3.4	3.3	35.6	20.3	134	5.0
Nickel (Ni)	3.0	ug	5.8	<3.0	3.0	5.4	<3.0	<3.0	<3.0	<3.0	<3.0	<3.0	6.9	<3.0
Selenium (Se)	10	ug	<10	<10	<10	<10	<10	<10	<10	<10	<10	<10	<10	<10
Vanadium (V)	5.0	ug	<5.0	<5.0	<5.0	7.2	<5.0	<5.0	<5.0	<5.0	<5.0	<5.0	5.8	<5.0
Zinc (Zn)	5.0	ug	67.5	14.4	35.3	23.4	25.6	6.6	<5.0	<5.0	26.9	14.3	79.2	<5.0
Particulates (Dustfall)														
Fixed Dustfall	0.10	mg/dm2.day												
Volatile Dustfall	0.10	mg/dm2.day												
Total Dustfall	0.10	mg/dm2.day												
Fixed Insoluble Dustfall	0.10	mg/dm2.day												
Volatile Insoluble Dustfall	0.10	mg/dm2.day												
Total Insoluble Dustfall	0.10	mg/dm2.day												
Fixed Soluble Dustfall	0.10	mg/dm2.day												
Volatile Soluble Dustfall	0.10	mg/dm2.day												
Total Soluble Dustfall	0.10	mg/dm2.day												
Metals (Dustfall)														
Aluminum (Al)-Total	0.000037	mg/dm2.day												
Antimony (Sb)-Total	0.0000014	mg/dm2.day												
Arsenic (As)-Total	0.0000012	mg/dm2.day												
Barium (Ba)-Total	0.00000062	mg/dm2.day												
Beryllium (Be)-Total	0.0000062	mg/dm2.day												
Bismuth (Bi)-Total	0.0000062	mg/dm2.day												
Boron (B)-Total	0.00012	mg/dm2.day												
Cadmium (Cd)-Total	0.00000062	mg/dm2.day												
Calcium (Ca)-Total	0.00025	mg/dm2.day												
Chromium (Cr)-Total	0.0000062	mg/dm2.day												
Cobalt (Co)-Total	0.0000012	mg/dm2.day												
Copper (Cu)-Total	0.0000062	mg/dm2.day												
Iron (Fe)-Total	0.00037	mg/dm2.day												
Lead (Pb)-Total	0.00000062	mg/dm2.day												
Lithium (Li)-Total	0.000062	mg/dm2.day												
Magnesium (Mg)-Total	0.000062	mg/dm2.day												
Manganese (Mn)-Total	0.0000012	mg/dm2.day												
Molybdenum (Mo)-Total	0.00000062	mg/dm2.day												
Nickel (Ni)-Total	0.0000062	mg/dm2.day												

Results Summary L2585978

Job Reference NEW GOLD RRP
Report To Sarah Flesher, New Gold Inc. Rainy River Proj
Date Received 10-May-2021 8:30
Report Date 4-Jun-2021 17:27
Report Version 1

Client Sample ID			NORTHWEST-TSP-358	NORTHWEST-TSP-359	NORTHWEST-TSP-360	SOUTH-PM2.5-356	SOUTH-PM2.5-357	SOUTH-PM2.5-358	SOUTH-PM2.5-359	SOUTH-PM2.5-360	NORTH-PM2.5-356	NORTH-PM2.5-357	NORTH-PM2.5-358
Date Sampled			16-Apr-2021 0:00	22-Apr-2021 0:00	28-Apr-2021 0:00	4-Apr-2021 0:00	10-Apr-2021 0:00	16-Apr-2021 0:00	22-Apr-2021 0:00	28-Apr-2021 0:00	4-Apr-2021 0:00	10-Apr-2021 0:00	16-Apr-2021 0:00
ALS Sample ID			L2585978-13	L2585978-14	L2585978-15	L2585978-16	L2585978-17	L2585978-18	L2585978-19	L2585978-20	L2585978-21	L2585978-22	L2585978-23
Parameter	Lowest Detection Limit	Units	Filter	Filter	Filter	Filter	Filter	Filter	Filter	Filter	Filter	Filter	Filter
Particulates (Filter)													
Total particulate	15	ug	5800	51800	35700	38	<15	53	101	161	79	<15	<15
Total Metals (Filter)													
Arsenic (As)	3.0	ug	<3.0	<3.0	<3.0								
Cadmium (Cd)	2.0	ug	<2.0	<2.0	<2.0								
Chromium (Cr)	5.0	ug	<5.0	<5.0	<5.0								
Cobalt (Co)	2.0	ug	<2.0	<2.0	<2.0								
Copper (Cu)	4.0	ug	32.5	58.5	99.0								
Iron (Fe)	20	ug	133	936	734								
Lead (Pb)	3.0	ug	<3.0	<3.0	<3.0								
Manganese (Mn)	1.0	ug	3.8	30.8	21.2								
Nickel (Ni)	3.0	ug	<3.0	<3.0	<3.0								
Selenium (Se)	10	ug	<10	<10	<10								
Vanadium (V)	5.0	ug	<5.0	<5.0	<5.0								
Zinc (Zn)	5.0	ug	9.5	14.9	16.4								
Particulates (Dustfall)													
Fixed Dustfall	0.10	mg/dm2.day											
Volatile Dustfall	0.10	mg/dm2.day											
Total Dustfall	0.10	mg/dm2.day											
Fixed Insoluble Dustfall	0.10	mg/dm2.day											
Volatile Insoluble Dustfall	0.10	mg/dm2.day											
Total Insoluble Dustfall	0.10	mg/dm2.day											
Fixed Soluble Dustfall	0.10	mg/dm2.day											
Volatile Soluble Dustfall	0.10	mg/dm2.day											
Total Soluble Dustfall	0.10	mg/dm2.day											
Metals (Dustfall)													
Aluminum (Al)-Total	0.000037	mg/dm2.day											
Antimony (Sb)-Total	0.0000014	mg/dm2.day											
Arsenic (As)-Total	0.0000012	mg/dm2.day											
Barium (Ba)-Total	0.00000062	mg/dm2.day											
Beryllium (Be)-Total	0.0000062	mg/dm2.day											
Bismuth (Bi)-Total	0.0000062	mg/dm2.day											
Boron (B)-Total	0.00012	mg/dm2.day											
Cadmium (Cd)-Total	0.00000062	mg/dm2.day											
Calcium (Ca)-Total	0.00025	mg/dm2.day											
Chromium (Cr)-Total	0.0000062	mg/dm2.day											
Cobalt (Co)-Total	0.0000012	mg/dm2.day											
Copper (Cu)-Total	0.0000062	mg/dm2.day											
Iron (Fe)-Total	0.00037	mg/dm2.day											
Lead (Pb)-Total	0.00000062	mg/dm2.day											
Lithium (Li)-Total	0.000062	mg/dm2.day											
Magnesium (Mg)-Total	0.000062	mg/dm2.day											
Manganese (Mn)-Total	0.0000012	mg/dm2.day											
Molybdenum (Mo)-Total	0.00000062	mg/dm2.day											
Nickel (Ni)-Total	0.0000062	mg/dm2.day											

Results Summary L2585978

Job Reference NEW GOLD RRP
Report To Sarah Flesher, New Gold Inc. Rainy River Proj
Date Received 10-May-2021 8:30
Report Date 4-Jun-2021 17:27
Report Version 1

Client Sample ID			NORTH-PM2.5-359	NORTH-PM2.5-360	NORTHWEST-PM2.5-356	NORTHWEST-PM2.5-357	NORTHWEST-PM2.5-358	NORTHWEST-PM2.5-359	NORTHWEST-PM2.5-360	NOP1-DUSTFALL-4	CP1-DUSTFALL-4	WCP1-DUSTFALL-4	GH1-DUSTFALL-4	SPP1-DUSTFALL-17
Date Sampled			22-Apr-2021	28-Apr-2021	4-Apr-2021	10-Apr-2021	16-Apr-2021	22-Apr-2021	28-Apr-2021	3-May-2021	3-May-2021	3-May-2021	3-May-2021	7-Apr-2021
Time Sampled			0:00	0:00	0:00	0:00	0:00	0:00	0:00	0:00	0:00	0:00	0:00	0:00
ALS Sample ID			L2585978-24	L2585978-25	L2585978-26	L2585978-27	L2585978-28	L2585978-29	L2585978-30	L2585978-31	L2585978-32	L2585978-33	L2585978-34	L2585978-35
Parameter	Lowest Detection Limit	Units	Filter	Filter	Filter	Filter	Filter	Filter	Filter	Dustfall	Dustfall	Dustfall	Dustfall	Dustfall
Particulates (Filter)														
Total particulate	15	ug	34	<15	99	34	<15	50	76					
Total Metals (Filter)														
Arsenic (As)	3.0	ug												
Cadmium (Cd)	2.0	ug												
Chromium (Cr)	5.0	ug												
Cobalt (Co)	2.0	ug												
Copper (Cu)	4.0	ug												
Iron (Fe)	20	ug												
Lead (Pb)	3.0	ug												
Manganese (Mn)	1.0	ug												
Nickel (Ni)	3.0	ug												
Selenium (Se)	10	ug												
Vanadium (V)	5.0	ug												
Zinc (Zn)	5.0	ug												
Particulates (Dustfall)														
Fixed Dustfall	0.10	mg/dm2.day								3.81	1.00	1.83	0.83	1.10
Volatile Dustfall	0.10	mg/dm2.day								0.16	0.82	2.65	0.70	<0.43
Total Dustfall	0.10	mg/dm2.day								3.96	1.82	4.48	1.52	1.62
Fixed Insoluble Dustfall	0.10	mg/dm2.day								3.47	0.48	0.50	0.33	1.06
Volatile Insoluble Dustfall	0.10	mg/dm2.day								0.16	0.53	1.56	0.33	<0.43
Total Insoluble Dustfall	0.10	mg/dm2.day								3.63	1.00	2.06	0.67	1.23
Fixed Soluble Dustfall	0.10	mg/dm2.day								0.34	0.52	1.33	0.49	<0.43
Volatile Soluble Dustfall	0.10	mg/dm2.day								<0.10	0.30	1.09	0.36	<0.43
Total Soluble Dustfall	0.10	mg/dm2.day								0.34	0.82	2.42	0.85	<0.43
Metals (Dustfall)														
Aluminum (Al)-Total	0.000037	mg/dm2.day								0.0600	0.00935	0.0344	0.00461	0.00953
Antimony (Sb)-Total	0.0000014	mg/dm2.day								<0.0000085	<0.0000014	<0.0000061	<0.0000028	<0.0000062
Arsenic (As)-Total	0.0000012	mg/dm2.day								0.0000648	0.0000047	0.0000629	0.0000061	0.0000078
Barium (Ba)-Total	0.00000062	mg/dm2.day								0.000304	0.0000763	0.000459	0.0000589	0.0000615
Beryllium (Be)-Total	0.0000062	mg/dm2.day								<0.0000071	<0.0000068	<0.000010	<0.0000071	<0.000031
Bismuth (Bi)-Total	0.0000062	mg/dm2.day								<0.0000071	<0.0000068	<0.000010	<0.0000071	<0.000031
Boron (B)-Total	0.00012	mg/dm2.day								<0.00014	<0.00014	<0.00020	<0.00014	<0.00062
Cadmium (Cd)-Total	0.00000062	mg/dm2.day								0.0000106	0.00000109	0.0000267	0.00000136	<0.0000031
Calcium (Ca)-Total	0.00025	mg/dm2.day								0.127	0.110	0.436	0.0623	0.0368
Chromium (Cr)-Total	0.0000062	mg/dm2.day								0.0000558	0.0000163	0.000078	0.0000094	<0.000031
Cobalt (Co)-Total	0.0000012	mg/dm2.day								0.0000175	0.0000043	0.0000336	0.0000084	<0.0000062
Copper (Cu)-Total	0.0000062	mg/dm2.day								0.000230	0.0000658	0.00212	0.000109	0.000089
Iron (Fe)-Total	0.00037	mg/dm2.day								0.0485	0.00947	0.0483	0.00571	0.0076
Lead (Pb)-Total	0.00000062	mg/dm2.day								0.000147	0.0000103	0.000116	0.00000441	0.0000259
Lithium (Li)-Total	0.000062	mg/dm2.day								0.000089	<0.000068	<0.00010	<0.000071	<0.00031
Magnesium (Mg)-Total	0.000062	mg/dm2.day								0.0258	0.0219	0.0634	0.0154	0.00588
Manganese (Mn)-Total	0.0000012	mg/dm2.day								0.00208	0.000363	0.00199	0.000361	0.000345
Molybdenum (Mo)-Total	0.00000062	mg/dm2.day								0.00000699	0.00000574	0.0000912	0.00000456	<0.0000031
Nickel (Ni)-Total	0.0000062	mg/dm2.day								0.0000426	0.0000123	0.000080	0.0000102	<0.000031

Results Summary L2585978

Job Reference NEW GOLD RRP
Report To Sarah Flesher, New Gold Inc. Rainy River Proj
Date Received 10-May-2021 8:30
Report Date 4-Jun-2021 17:27
Report Version 1

Client Sample ID			SPP1-DUSTFALL-18	SPP1-DUSTFALL-19	SPP1-DUSTFALL-20	DUSTFALL-GALLINGER ROAD	DUSTFALL-TAIT ROAD (SOUTH)	DUSTFALL-NORTHWEST	SPP1-DUSTFALL-21
Date Sampled			14-Apr-2021	21-Apr-2021	28-Apr-2021	3-May-2021	3-May-2021	3-May-2021	
Time Sampled			0:00	0:00	0:00	0:00	0:00	0:00	
ALS Sample ID			L2585978-36	L2585978-37	L2585978-38	L2585978-39	L2585978-40	L2585978-41	L2585978-43
Parameter	Lowest Detection Limit	Units	Dustfall	Dustfall	Dustfall	Dustfall	Dustfall	Dustfall	Dustfall
Particulates (Filter)									
Total particulate	15	ug							
Total Metals (Filter)									
Arsenic (As)	3.0	ug							
Cadmium (Cd)	2.0	ug							
Chromium (Cr)	5.0	ug							
Cobalt (Co)	2.0	ug							
Copper (Cu)	4.0	ug							
Iron (Fe)	20	ug							
Lead (Pb)	3.0	ug							
Manganese (Mn)	1.0	ug							
Nickel (Ni)	3.0	ug							
Selenium (Se)	10	ug							
Vanadium (V)	5.0	ug							
Zinc (Zn)	5.0	ug							
Particulates (Dustfall)									
Fixed Dustfall	0.10	mg/dm2.day	<0.43	4.00	2.29	<0.10	1.08	0.96	27.9
Volatile Dustfall	0.10	mg/dm2.day	3.30	4.18	7.15	0.19	0.70	0.72	28.6
Total Dustfall	0.10	mg/dm2.day	<0.43	9.17	6.18	0.28	1.78	1.67	56.5
Fixed Insoluble Dustfall	0.10	mg/dm2.day	<0.43	2.57	1.54	<0.10	0.84	0.70	20.6
Volatile Insoluble Dustfall	0.10	mg/dm2.day	<0.43	1.97	1.68	0.14	0.52	0.45	23.1
Total Insoluble Dustfall	0.10	mg/dm2.day	<0.43	4.54	3.22	0.20	1.36	1.14	43.8
Fixed Soluble Dustfall	0.10	mg/dm2.day	<0.43	1.43	0.75	<0.10	0.24	0.26	7.33
Volatile Soluble Dustfall	0.10	mg/dm2.day	3.19	2.21	5.46	<0.10	0.18	0.27	5.46
Total Soluble Dustfall	0.10	mg/dm2.day	<0.43	4.63	2.96	<0.10	0.42	0.53	12.8
Metals (Dustfall)									
Aluminum (Al)-Total	0.000037	mg/dm2.day	0.00107	0.0164	0.0167	0.00108	0.0145	0.00835	0.190
Antimony (Sb)-Total	0.0000014	mg/dm2.day	0.000040	0.0000078	<0.0000067	<0.0000060	<0.0000074	<0.0000035	0.0000171
Arsenic (As)-Total	0.0000012	mg/dm2.day	<0.000019	0.0000237	0.0000111	<0.0000020	0.0000108	0.0000040	0.000274
Barium (Ba)-Total	0.00000062	mg/dm2.day	0.0000822	0.000193	0.000137	0.0000277	0.0000761	0.0000906	0.00301
Beryllium (Be)-Total	0.0000062	mg/dm2.day	<0.000095	<0.000037	<0.000034	<0.000010	<0.0000062	<0.0000087	<0.000032
Bismuth (Bi)-Total	0.0000062	mg/dm2.day	<0.000095	<0.000037	<0.000034	<0.000010	<0.0000062	<0.0000087	<0.000032
Boron (B)-Total	0.00012	mg/dm2.day	<0.0019	<0.00075	<0.00067	<0.00020	0.00014	<0.00017	<0.00064
Cadmium (Cd)-Total	0.00000062	mg/dm2.day	<0.0000095	0.0000065	<0.0000034	<0.0000010	0.00000238	0.00000246	0.000241
Calcium (Ca)-Total	0.00025	mg/dm2.day	0.0194	0.208	0.118	0.0106	0.0451	0.0501	1.29
Chromium (Cr)-Total	0.0000062	mg/dm2.day	<0.000095	<0.000037	<0.000034	<0.000010	0.0000301	0.0000148	0.000313
Cobalt (Co)-Total	0.0000012	mg/dm2.day	<0.000019	0.0000102	<0.0000067	<0.0000020	0.0000077	0.0000049	0.000194
Copper (Cu)-Total	0.0000062	mg/dm2.day	<0.000095	0.000744	0.00013	0.000030	0.000162	0.0000578	0.00309
Iron (Fe)-Total	0.00037	mg/dm2.day	<0.0057	0.0191	0.0173	0.00119	0.0172	0.00814	0.219
Lead (Pb)-Total	0.00000062	mg/dm2.day	<0.0000095	0.000272	0.0000540	0.0000023	0.0000209	0.00000570	0.00139
Lithium (Li)-Total	0.000062	mg/dm2.day	<0.00095	<0.00037	<0.00034	<0.00010	<0.000062	<0.000087	<0.00032
Magnesium (Mg)-Total	0.000062	mg/dm2.day	0.00370	0.0424	0.0406	0.00285	0.0145	0.00903	0.448
Manganese (Mn)-Total	0.0000012	mg/dm2.day	0.000258	0.00256	0.00174	0.000112	0.000681	0.000258	0.0250
Molybdenum (Mo)-Total	0.00000062	mg/dm2.day	<0.0000095	<0.000030	<0.000017	<0.0000010	0.00000351	0.00000672	0.000170
Nickel (Ni)-Total	0.0000062	mg/dm2.day	<0.000095	0.000041	0.000064	<0.000010	0.0000340	0.0000106	0.000412

Results Summary L2585978

Job Reference NEW GOLD RRP
Report To Sarah Flesher, New Gold Inc. Rainy River Project
Date Received 10-May-2021 8:30
Report Date 4-Jun-2021 17:27
Report Version 1

Client Sample ID			SOUTH-TSP-356	SOUTH-TSP-357	SOUTH-TSP-358	SOUTH-TSP-359	SOUTH-TSP-360	NORTH-TSP-356	NORTH-TSP-357	NORTH-TSP-358	NORTH-TSP-359	NORTH-TSP-360	NORTHWEST-TSP-356	NORTHWEST-TSP-357
Date Sampled			4-Apr-2021	10-Apr-2021	16-Apr-2021	22-Apr-2021	28-Apr-2021	4-Apr-2021	10-Apr-2021	16-Apr-2021	22-Apr-2021	28-Apr-2021	4-Apr-2021	10-Apr-2021
Time Sampled			0:00	0:00	0:00	0:00	0:00	0:00	0:00	0:00	0:00	0:00	0:00	0:00
ALS Sample ID			L2585978-1	L2585978-2	L2585978-3	L2585978-4	L2585978-5	L2585978-6	L2585978-7	L2585978-8	L2585978-9	L2585978-10	L2585978-11	L2585978-12
Parameter	Lowest Detection Limit	Units	Filter	Filter	Filter	Filter	Filter	Filter	Filter	Filter	Filter	Filter	Filter	Filter
Phosphorus (P)-Total	0.00062	mg/dm2.day												
Potassium (K)-Total	0.00062	mg/dm2.day												
Selenium (Se)-Total	0.000012	mg/dm2.day												
Silicon (Si)-Total	0.00062	mg/dm2.day												
Silver (Ag)-Total	0.00000012	mg/dm2.day												
Sodium (Na)-Total	0.00062	mg/dm2.day												
Strontium (Sr)-Total	0.0000012	mg/dm2.day												
Thallium (Tl)-Total	0.0000012	mg/dm2.day												
Tin (Sn)-Total	0.0000012	mg/dm2.day												
Titanium (Ti)-Total	0.00012	mg/dm2.day												
Uranium (U)-Total	0.00000012	mg/dm2.day												
Vanadium (V)-Total	0.000012	mg/dm2.day												
Zinc (Zn)-Total	0.000037	mg/dm2.day												

Qualifier Legend

DLB Detection Limit Raised. Analyte detected at comparable level in Method Blank.

Results Summary L2585978

Job Reference NEW GOLD RRP
Report To Sarah Flesher, New Gold Inc. Rainy River Proj
Date Received 10-May-2021 8:30
Report Date 4-Jun-2021 17:27
Report Version 1

Client Sample ID			NORTHWEST-TSP-358	NORTHWEST-TSP-359	NORTHWEST-TSP-360	SOUTH-PM2.5-356	SOUTH-PM2.5-357	SOUTH-PM2.5-358	SOUTH-PM2.5-359	SOUTH-PM2.5-360	NORTH-PM2.5-356	NORTH-PM2.5-357	NORTH-PM2.5-358
Date Sampled			16-Apr-2021	22-Apr-2021	28-Apr-2021	4-Apr-2021	10-Apr-2021	16-Apr-2021	22-Apr-2021	28-Apr-2021	4-Apr-2021	10-Apr-2021	16-Apr-2021
Time Sampled			0:00	0:00	0:00	0:00	0:00	0:00	0:00	0:00	0:00	0:00	0:00
ALS Sample ID			L2585978-13	L2585978-14	L2585978-15	L2585978-16	L2585978-17	L2585978-18	L2585978-19	L2585978-20	L2585978-21	L2585978-22	L2585978-23
Parameter	Lowest Detection Limit	Units	Filter	Filter	Filter	Filter	Filter	Filter	Filter	Filter	Filter	Filter	Filter
Phosphorus (P)-Total	0.00062	mg/dm2.day											
Potassium (K)-Total	0.00062	mg/dm2.day											
Selenium (Se)-Total	0.000012	mg/dm2.day											
Silicon (Si)-Total	0.00062	mg/dm2.day											
Silver (Ag)-Total	0.00000012	mg/dm2.day											
Sodium (Na)-Total	0.00062	mg/dm2.day											
Strontium (Sr)-Total	0.0000012	mg/dm2.day											
Thallium (Tl)-Total	0.0000012	mg/dm2.day											
Tin (Sn)-Total	0.0000012	mg/dm2.day											
Titanium (Ti)-Total	0.00012	mg/dm2.day											
Uranium (U)-Total	0.00000012	mg/dm2.day											
Vanadium (V)-Total	0.000012	mg/dm2.day											
Zinc (Zn)-Total	0.000037	mg/dm2.day											

Qualifier Legend
DLB Detection Limit Raised. Analyte detected at cc

Results Summary L2585978

Job Reference NEW GOLD RRP
Report To Sarah Flesher, New Gold Inc. Rainy River Proj
Date Received 10-May-2021 8:30
Report Date 4-Jun-2021 17:27
Report Version 1

Client Sample ID			NORTH-PM2.5-359	NORTH-PM2.5-360	NORTHWEST-PM2.5-356	NORTHWEST-PM2.5-357	NORTHWEST-PM2.5-358	NORTHWEST-PM2.5-359	NORTHWEST-PM2.5-360	NOP1-DUSTFALL-4	CP1-DUSTFALL-4	WCP1-DUSTFALL-4	GH1-DUSTFALL-4	SPP1-DUSTFALL-17
Date Sampled			22-Apr-2021	28-Apr-2021	4-Apr-2021	10-Apr-2021	16-Apr-2021	22-Apr-2021	28-Apr-2021	3-May-2021	3-May-2021	3-May-2021	3-May-2021	7-Apr-2021
Time Sampled			0:00	0:00	0:00	0:00	0:00	0:00	0:00	0:00	0:00	0:00	0:00	0:00
ALS Sample ID			L2585978-24	L2585978-25	L2585978-26	L2585978-27	L2585978-28	L2585978-29	L2585978-30	L2585978-31	L2585978-32	L2585978-33	L2585978-34	L2585978-35
Parameter	Lowest Detection Limit	Units	Filter	Filter	Filter	Filter	Filter	Filter	Filter	Dustfall	Dustfall	Dustfall	Dustfall	Dustfall
Phosphorus (P)-Total	0.00062	mg/dm2.day								<0.0050	0.0792	1.12	0.0604	<0.0031
Potassium (K)-Total	0.00062	mg/dm2.day								0.0276	0.0495	2.08	0.100	0.0038
Selenium (Se)-Total	0.000012	mg/dm2.day								<0.000014	<0.000014	0.000129	<0.000014	<0.000062
Silicon (Si)-Total	0.00062	mg/dm2.day								0.102	0.0186	0.0794	0.00787	0.0136
Silver (Ag)-Total	0.00000012	mg/dm2.day								0.00000085	0.00000055	0.00000665	0.00000020	<0.00000062
Sodium (Na)-Total	0.00062	mg/dm2.day								0.00954	0.0321	0.489	0.0222	0.0037
Strontium (Sr)-Total	0.0000012	mg/dm2.day								0.000317	0.0000865	0.000320	0.000137	0.000117
Thallium (Tl)-Total	0.0000012	mg/dm2.day								<0.0000014	<0.0000014	<0.0000020	<0.0000014	<0.0000062
Tin (Sn)-Total	0.0000012	mg/dm2.day								<0.0000028	<0.0000014	<0.0000040	<0.0000014	<0.0000062
Titanium (Ti)-Total	0.00012	mg/dm2.day								0.00101	0.00022	0.00073	<0.00014	<0.00062
Uranium (U)-Total	0.00000012	mg/dm2.day								0.00000187	0.00000065	0.00000205	0.00000044	<0.00000062
Vanadium (V)-Total	0.000012	mg/dm2.day								0.000071	0.000021	0.000082	<0.000014	<0.000062
Zinc (Zn)-Total	0.000037	mg/dm2.day								0.00286	0.000354	0.00660	0.000356	0.00060

Qualifier Legend

DLB Detection Limit Raised. Analyte detected at cc

Results Summary L2585978

Job Reference NEW GOLD RRP
Report To Sarah Flesher, New Gold Inc. Rainy River Proj
Date Received 10-May-2021 8:30
Report Date 4-Jun-2021 17:27
Report Version 1

Client Sample ID			SPP1-DUSTFALL-18	SPP1-DUSTFALL-19	SPP1-DUSTFALL-20	DUSTFALL-GALLINGER ROAD	DUSTFALL-TAIT ROAD (SOUTH)	DUSTFALL-NORTHWEST	SPP1-DUSTFALL-21
Date Sampled			14-Apr-2021	21-Apr-2021	28-Apr-2021	3-May-2021	3-May-2021	3-May-2021	
Time Sampled			0:00	0:00	0:00	0:00	0:00	0:00	
ALS Sample ID			L2585978-36	L2585978-37	L2585978-38	L2585978-39	L2585978-40	L2585978-41	L2585978-43
Parameter	Lowest Detection Limit	Units	Dustfall	Dustfall	Dustfall	Dustfall	Dustfall	Dustfall	Dustfall
Phosphorus (P)-Total	0.00062	mg/dm2.day	<0.0095	0.216	0.109	<0.0040	0.0377	0.0217	1.23
Potassium (K)-Total	0.00062	mg/dm2.day	<0.0095	0.250	0.133	0.0053	0.0491	0.0253	1.71
Selenium (Se)-Total	0.000012	mg/dm2.day	<0.00019	<0.000075	<0.000067	<0.000020	<0.000012	<0.000017	0.000148
Silicon (Si)-Total	0.00062	mg/dm2.day	<0.0095	0.0231	0.0228	0.0024	0.0217	0.0161	0.343
Silver (Ag)-Total	0.00000012	mg/dm2.day	<0.0000019	0.00000452	0.00000106	<0.00000020	0.00000218	0.00000025	0.0000349
Sodium (Na)-Total	0.00062	mg/dm2.day	<0.0095	0.137	0.0115	0.0033	0.0186	0.0170	0.481
Strontium (Sr)-Total	0.0000012	mg/dm2.day	0.000061	0.000197	0.000171	0.0000317	0.000126	0.0000695	0.00297
Thallium (Tl)-Total	0.0000012	mg/dm2.day	<0.000019	<0.0000075	<0.0000067	<0.0000020	<0.0000012	<0.0000017	<0.0000064
Tin (Sn)-Total	0.0000012	mg/dm2.day	<0.000019	<0.0000075	<0.0000067	<0.0000020	<0.0000012	<0.0000017	0.0000095
Titanium (Ti)-Total	0.00012	mg/dm2.day	<0.0019	<0.00075	<0.00067	<0.00020	0.00024	0.00018	0.00201
Uranium (U)-Total	0.00000012	mg/dm2.day	<0.0000019	0.00000093	<0.00000067	<0.00000020	0.00000039	0.00000089	0.0000172
Vanadium (V)-Total	0.000012	mg/dm2.day	<0.00019	<0.000075	<0.000067	<0.000020	0.000030	0.000020	0.000407
Zinc (Zn)-Total	0.000037	mg/dm2.day	<0.00057	0.00462	0.00107	0.000080	0.000407	0.000479	0.0330

Qualifier Legend
DLB Detection Limit Raised. Analyte detected at cc

Results of Analysis L2585978

Job Reference	NEW GOLD RRP
Report To	Sarah Flesher, New Gold Inc. Rainy River Project
Date Received	10-May-2021 8:30
Report Date	4-Jun-2021 17:27
Report Version	1

Parameter	ALS ID	Client Sample ID	ALS Test Code	Results	Detection Limit	Units	Qual	Date Sampled	Time Sampled	Prep Date	Analysis Date	QC Lot	QC Eval	Hold Time Eval	Matrix	Class
Particulates (Filter)																
Total particulate	L2585978-1	SOUTH-TSP-356	PART-HIVOL-GRAV-BU	125000	2300	ug		04-Apr-21	00:00		14-May-21	1473131	✓	✓	Filter	Particulates
Total Metals (Filter)																
Arsenic (As)	L2585978-1	SOUTH-TSP-356	MET-IO3.5-MS-BU	<3.0	3.0	ug		04-Apr-21	00:00	14-May-21	14-May-21	1473427	✓	✓	Filter	Total Metals
Cadmium (Cd)	L2585978-1	SOUTH-TSP-356	MET-IO3.5-MS-BU	<2.0	2.0	ug		04-Apr-21	00:00	14-May-21	14-May-21	1473427	✓	✓	Filter	Total Metals
Chromium (Cr)	L2585978-1	SOUTH-TSP-356	MET-IO3.5-MS-BU	9.7	5.0	ug		04-Apr-21	00:00	14-May-21	14-May-21	1473427	✓	✓	Filter	Total Metals
Cobalt (Co)	L2585978-1	SOUTH-TSP-356	MET-IO3.5-MS-BU	<2.0	2.0	ug		04-Apr-21	00:00	14-May-21	14-May-21	1473427	✓	✓	Filter	Total Metals
Copper (Cu)	L2585978-1	SOUTH-TSP-356	MET-IO3.5-MS-BU	105	4.0	ug		04-Apr-21	00:00	14-May-21	14-May-21	1473427	✓	✓	Filter	Total Metals
Iron (Fe)	L2585978-1	SOUTH-TSP-356	MET-IO3.5-MS-BU	2700	20	ug		04-Apr-21	00:00	14-May-21	14-May-21	1473427	✓	✓	Filter	Total Metals
Lead (Pb)	L2585978-1	SOUTH-TSP-356	MET-IO3.5-MS-BU	6.3	3.0	ug		04-Apr-21	00:00	14-May-21	14-May-21	1473427	✓	✓	Filter	Total Metals
Manganese (Mn)	L2585978-1	SOUTH-TSP-356	MET-IO3.5-MS-BU	86.4	1.0	ug		04-Apr-21	00:00	14-May-21	14-May-21	1473427	✓	✓	Filter	Total Metals
Nickel (Ni)	L2585978-1	SOUTH-TSP-356	MET-IO3.5-MS-BU	5.8	3.0	ug		04-Apr-21	00:00	14-May-21	14-May-21	1473427	✓	✓	Filter	Total Metals
Selenium (Se)	L2585978-1	SOUTH-TSP-356	MET-IO3.5-MS-BU	<10	10	ug		04-Apr-21	00:00	14-May-21	14-May-21	1473427	✓	✓	Filter	Total Metals
Vanadium (V)	L2585978-1	SOUTH-TSP-356	MET-IO3.5-MS-BU	<5.0	5.0	ug		04-Apr-21	00:00	14-May-21	14-May-21	1473427	✓	✓	Filter	Total Metals
Zinc (Zn)	L2585978-1	SOUTH-TSP-356	MET-IO3.5-MS-BU	67.5	5.0	ug		04-Apr-21	00:00	14-May-21	14-May-21	1473427	✓	✓	Filter	Total Metals
Particulates (Filter)																
Total particulate	L2585978-2	SOUTH-TSP-357	PART-HIVOL-GRAV-BU	22100	2300	ug		10-Apr-21	00:00		14-May-21	1473131	✓	✓	Filter	Particulates
Total Metals (Filter)																
Arsenic (As)	L2585978-2	SOUTH-TSP-357	MET-IO3.5-MS-BU	<3.0	3.0	ug		10-Apr-21	00:00	14-May-21	14-May-21	1473427	✓	✓	Filter	Total Metals
Cadmium (Cd)	L2585978-2	SOUTH-TSP-357	MET-IO3.5-MS-BU	<2.0	2.0	ug		10-Apr-21	00:00	14-May-21	14-May-21	1473427	✓	✓	Filter	Total Metals
Chromium (Cr)	L2585978-2	SOUTH-TSP-357	MET-IO3.5-MS-BU	<5.0	5.0	ug		10-Apr-21	00:00	14-May-21	14-May-21	1473427	✓	✓	Filter	Total Metals
Cobalt (Co)	L2585978-2	SOUTH-TSP-357	MET-IO3.5-MS-BU	<2.0	2.0	ug		10-Apr-21	00:00	14-May-21	14-May-21	1473427	✓	✓	Filter	Total Metals
Copper (Cu)	L2585978-2	SOUTH-TSP-357	MET-IO3.5-MS-BU	158	4.0	ug		10-Apr-21	00:00	14-May-21	14-May-21	1473427	✓	✓	Filter	Total Metals
Iron (Fe)	L2585978-2	SOUTH-TSP-357	MET-IO3.5-MS-BU	590	20	ug		10-Apr-21	00:00	14-May-21	14-May-21	1473427	✓	✓	Filter	Total Metals
Lead (Pb)	L2585978-2	SOUTH-TSP-357	MET-IO3.5-MS-BU	<3.0	3.0	ug		10-Apr-21	00:00	14-May-21	14-May-21	1473427	✓	✓	Filter	Total Metals
Manganese (Mn)	L2585978-2	SOUTH-TSP-357	MET-IO3.5-MS-BU	18.2	1.0	ug		10-Apr-21	00:00	14-May-21	14-May-21	1473427	✓	✓	Filter	Total Metals
Nickel (Ni)	L2585978-2	SOUTH-TSP-357	MET-IO3.5-MS-BU	<3.0	3.0	ug		10-Apr-21	00:00	14-May-21	14-May-21	1473427	✓	✓	Filter	Total Metals
Selenium (Se)	L2585978-2	SOUTH-TSP-357	MET-IO3.5-MS-BU	<10	10	ug		10-Apr-21	00:00	14-May-21	14-May-21	1473427	✓	✓	Filter	Total Metals
Vanadium (V)	L2585978-2	SOUTH-TSP-357	MET-IO3.5-MS-BU	<5.0	5.0	ug		10-Apr-21	00:00	14-May-21	14-May-21	1473427	✓	✓	Filter	Total Metals
Zinc (Zn)	L2585978-2	SOUTH-TSP-357	MET-IO3.5-MS-BU	14.4	5.0	ug		10-Apr-21	00:00	14-May-21	14-May-21	1473427	✓	✓	Filter	Total Metals
Particulates (Filter)																
Total particulate	L2585978-3	SOUTH-TSP-358	PART-HIVOL-GRAV-BU	53700	2300	ug		16-Apr-21	00:00		14-May-21	1473131	✓	✓	Filter	Particulates
Total Metals (Filter)																
Arsenic (As)	L2585978-3	SOUTH-TSP-358	MET-IO3.5-MS-BU	<3.0	3.0	ug		16-Apr-21	00:00	14-May-21	14-May-21	1473427	✓	✓	Filter	Total Metals
Cadmium (Cd)	L2585978-3	SOUTH-TSP-358	MET-IO3.5-MS-BU	<2.0	2.0	ug		16-Apr-21	00:00	14-May-21	14-May-21	1473427	✓	✓	Filter	Total Metals
Chromium (Cr)	L2585978-3	SOUTH-TSP-358	MET-IO3.5-MS-BU	<5.0	5.0	ug		16-Apr-21	00:00	14-May-21	14-May-21	1473427	✓	✓	Filter	Total Metals
Cobalt (Co)	L2585978-3	SOUTH-TSP-358	MET-IO3.5-MS-BU	<2.0	2.0	ug		16-Apr-21	00:00	14-May-21	14-May-21	1473427	✓	✓	Filter	Total Metals
Copper (Cu)	L2585978-3	SOUTH-TSP-358	MET-IO3.5-MS-BU	156	4.0	ug		16-Apr-21	00:00	14-May-21	14-May-21	1473427	✓	✓	Filter	Total Metals
Iron (Fe)	L2585978-3	SOUTH-TSP-358	MET-IO3.5-MS-BU	1100	20	ug		16-Apr-21	00:00	14-May-21	14-May-21	1473427	✓	✓	Filter	Total Metals
Lead (Pb)	L2585978-3	SOUTH-TSP-358	MET-IO3.5-MS-BU	3.2	3.0	ug		16-Apr-21	00:00	14-May-21	14-May-21	1473427	✓	✓	Filter	Total Metals
Manganese (Mn)	L2585978-3	SOUTH-TSP-358	MET-IO3.5-MS-BU	42.7	1.0	ug		16-Apr-21	00:00	14-May-21	14-May-21	1473427	✓	✓	Filter	Total Metals
Nickel (Ni)	L2585978-3	SOUTH-TSP-358	MET-IO3.5-MS-BU	3.0	3.0	ug		16-Apr-21	00:00	14-May-21	14-May-21	1473427	✓	✓	Filter	Total Metals
Selenium (Se)	L2585978-3	SOUTH-TSP-358	MET-IO3.5-MS-BU	<10	10	ug		16-Apr-21	00:00	14-May-21	14-May-21	1473427	✓	✓	Filter	Total Metals
Vanadium (V)	L2585978-3	SOUTH-TSP-358	MET-IO3.5-MS-BU	<5.0	5.0	ug		16-Apr-21	00:00	14-May-21	14-May-21	1473427	✓	✓	Filter	Total Metals
Zinc (Zn)	L2585978-3	SOUTH-TSP-358	MET-IO3.5-MS-BU	35.3	5.0	ug		16-Apr-21	00:00	14-May-21	14-May-21	1473427	✓	✓	Filter	Total Metals
Particulates (Filter)																
Total particulate	L2585978-4	SOUTH-TSP-359	PART-HIVOL-GRAV-BU	128000	2300	ug		22-Apr-21	00:00		14-May-21	1473131	✓	✓	Filter	Particulates

Results of Analysis L2585978

Job Reference NEW GOLD RRP
Report To Sarah Flesher, New Gold Inc. Rainy River Project
Date Received 10-May-2021 8:30
Report Date 4-Jun-2021 17:27
Report Version 1

Parameter	ALS ID	Client Sample ID	ALS Test Code	Results	Detection Limit	Units	Qual	Date Sampled	Time Sampled	Prep Date	Analysis Date	QC Lot	QC Eval	Hold Time Eval	Matrix	Class
Total Metals (Filter)																
Arsenic (As)	L2585978-4	SOUTH-TSP-359	MET-IO3.5-MS-BU	<3.0	3.0	ug		22-Apr-21	00:00	14-May-21	14-May-21	1473427	✓	✓	Filter	Total Metals
Cadmium (Cd)	L2585978-4	SOUTH-TSP-359	MET-IO3.5-MS-BU	<2.0	2.0	ug		22-Apr-21	00:00	14-May-21	14-May-21	1473427	✓	✓	Filter	Total Metals
Chromium (Cr)	L2585978-4	SOUTH-TSP-359	MET-IO3.5-MS-BU	6.5	5.0	ug		22-Apr-21	00:00	14-May-21	14-May-21	1473427	✓	✓	Filter	Total Metals
Cobalt (Co)	L2585978-4	SOUTH-TSP-359	MET-IO3.5-MS-BU	2.5	2.0	ug		22-Apr-21	00:00	14-May-21	14-May-21	1473427	✓	✓	Filter	Total Metals
Copper (Cu)	L2585978-4	SOUTH-TSP-359	MET-IO3.5-MS-BU	119	4.0	ug		22-Apr-21	00:00	14-May-21	14-May-21	1473427	✓	✓	Filter	Total Metals
Iron (Fe)	L2585978-4	SOUTH-TSP-359	MET-IO3.5-MS-BU	4200	20	ug		22-Apr-21	00:00	14-May-21	14-May-21	1473427	✓	✓	Filter	Total Metals
Lead (Pb)	L2585978-4	SOUTH-TSP-359	MET-IO3.5-MS-BU	3.4	3.0	ug		22-Apr-21	00:00	14-May-21	14-May-21	1473427	✓	✓	Filter	Total Metals
Manganese (Mn)	L2585978-4	SOUTH-TSP-359	MET-IO3.5-MS-BU	107	1.0	ug		22-Apr-21	00:00	14-May-21	14-May-21	1473427	✓	✓	Filter	Total Metals
Nickel (Ni)	L2585978-4	SOUTH-TSP-359	MET-IO3.5-MS-BU	5.4	3.0	ug		22-Apr-21	00:00	14-May-21	14-May-21	1473427	✓	✓	Filter	Total Metals
Selenium (Se)	L2585978-4	SOUTH-TSP-359	MET-IO3.5-MS-BU	<10	10	ug		22-Apr-21	00:00	14-May-21	14-May-21	1473427	✓	✓	Filter	Total Metals
Vanadium (V)	L2585978-4	SOUTH-TSP-359	MET-IO3.5-MS-BU	7.2	5.0	ug		22-Apr-21	00:00	14-May-21	14-May-21	1473427	✓	✓	Filter	Total Metals
Zinc (Zn)	L2585978-4	SOUTH-TSP-359	MET-IO3.5-MS-BU	23.4	5.0	ug		22-Apr-21	00:00	14-May-21	14-May-21	1473427	✓	✓	Filter	Total Metals
Particulates (Filter)																
Total particulate	L2585978-5	SOUTH-TSP-360	PART-HIVOL-GRAV-BU	54300	2300	ug		28-Apr-21	00:00		14-May-21	1473131	✓	✓	Filter	Particulates
Total Metals (Filter)																
Arsenic (As)	L2585978-5	SOUTH-TSP-360	MET-IO3.5-MS-BU	<3.0	3.0	ug		28-Apr-21	00:00	14-May-21	14-May-21	1473427	✓	✓	Filter	Total Metals
Cadmium (Cd)	L2585978-5	SOUTH-TSP-360	MET-IO3.5-MS-BU	<2.0	2.0	ug		28-Apr-21	00:00	14-May-21	14-May-21	1473427	✓	✓	Filter	Total Metals
Chromium (Cr)	L2585978-5	SOUTH-TSP-360	MET-IO3.5-MS-BU	<5.0	5.0	ug		28-Apr-21	00:00	14-May-21	14-May-21	1473427	✓	✓	Filter	Total Metals
Cobalt (Co)	L2585978-5	SOUTH-TSP-360	MET-IO3.5-MS-BU	<2.0	2.0	ug		28-Apr-21	00:00	14-May-21	14-May-21	1473427	✓	✓	Filter	Total Metals
Copper (Cu)	L2585978-5	SOUTH-TSP-360	MET-IO3.5-MS-BU	134	4.0	ug		28-Apr-21	00:00	14-May-21	14-May-21	1473427	✓	✓	Filter	Total Metals
Iron (Fe)	L2585978-5	SOUTH-TSP-360	MET-IO3.5-MS-BU	1140	20	ug		28-Apr-21	00:00	14-May-21	14-May-21	1473427	✓	✓	Filter	Total Metals
Lead (Pb)	L2585978-5	SOUTH-TSP-360	MET-IO3.5-MS-BU	<3.0	3.0	ug		28-Apr-21	00:00	14-May-21	14-May-21	1473427	✓	✓	Filter	Total Metals
Manganese (Mn)	L2585978-5	SOUTH-TSP-360	MET-IO3.5-MS-BU	31.0	1.0	ug		28-Apr-21	00:00	14-May-21	14-May-21	1473427	✓	✓	Filter	Total Metals
Nickel (Ni)	L2585978-5	SOUTH-TSP-360	MET-IO3.5-MS-BU	<3.0	3.0	ug		28-Apr-21	00:00	14-May-21	14-May-21	1473427	✓	✓	Filter	Total Metals
Selenium (Se)	L2585978-5	SOUTH-TSP-360	MET-IO3.5-MS-BU	<10	10	ug		28-Apr-21	00:00	14-May-21	14-May-21	1473427	✓	✓	Filter	Total Metals
Vanadium (V)	L2585978-5	SOUTH-TSP-360	MET-IO3.5-MS-BU	<5.0	5.0	ug		28-Apr-21	00:00	14-May-21	14-May-21	1473427	✓	✓	Filter	Total Metals
Zinc (Zn)	L2585978-5	SOUTH-TSP-360	MET-IO3.5-MS-BU	25.6	5.0	ug		28-Apr-21	00:00	14-May-21	14-May-21	1473427	✓	✓	Filter	Total Metals
Particulates (Filter)																
Total particulate	L2585978-6	NORTH-TSP-356	PART-HIVOL-GRAV-BU	34600	2300	ug		04-Apr-21	00:00		14-May-21	1473131	✓	✓	Filter	Particulates
Total Metals (Filter)																
Arsenic (As)	L2585978-6	NORTH-TSP-356	MET-IO3.5-MS-BU	<3.0	3.0	ug		04-Apr-21	00:00	14-May-21	14-May-21	1473427	✓	✓	Filter	Total Metals
Cadmium (Cd)	L2585978-6	NORTH-TSP-356	MET-IO3.5-MS-BU	<2.0	2.0	ug		04-Apr-21	00:00	14-May-21	14-May-21	1473427	✓	✓	Filter	Total Metals
Chromium (Cr)	L2585978-6	NORTH-TSP-356	MET-IO3.5-MS-BU	5.9	5.0	ug		04-Apr-21	00:00	14-May-21	14-May-21	1473427	✓	✓	Filter	Total Metals
Cobalt (Co)	L2585978-6	NORTH-TSP-356	MET-IO3.5-MS-BU	<2.0	2.0	ug		04-Apr-21	00:00	14-May-21	14-May-21	1473427	✓	✓	Filter	Total Metals
Copper (Cu)	L2585978-6	NORTH-TSP-356	MET-IO3.5-MS-BU	138	4.0	ug		04-Apr-21	00:00	14-May-21	14-May-21	1473427	✓	✓	Filter	Total Metals
Iron (Fe)	L2585978-6	NORTH-TSP-356	MET-IO3.5-MS-BU	563	20	ug		04-Apr-21	00:00	14-May-21	14-May-21	1473427	✓	✓	Filter	Total Metals
Lead (Pb)	L2585978-6	NORTH-TSP-356	MET-IO3.5-MS-BU	<3.0	3.0	ug		04-Apr-21	00:00	14-May-21	14-May-21	1473427	✓	✓	Filter	Total Metals
Manganese (Mn)	L2585978-6	NORTH-TSP-356	MET-IO3.5-MS-BU	15.9	1.0	ug		04-Apr-21	00:00	14-May-21	14-May-21	1473427	✓	✓	Filter	Total Metals
Nickel (Ni)	L2585978-6	NORTH-TSP-356	MET-IO3.5-MS-BU	<3.0	3.0	ug		04-Apr-21	00:00	14-May-21	14-May-21	1473427	✓	✓	Filter	Total Metals
Selenium (Se)	L2585978-6	NORTH-TSP-356	MET-IO3.5-MS-BU	<10	10	ug		04-Apr-21	00:00	14-May-21	14-May-21	1473427	✓	✓	Filter	Total Metals
Vanadium (V)	L2585978-6	NORTH-TSP-356	MET-IO3.5-MS-BU	<5.0	5.0	ug		04-Apr-21	00:00	14-May-21	14-May-21	1473427	✓	✓	Filter	Total Metals
Zinc (Zn)	L2585978-6	NORTH-TSP-356	MET-IO3.5-MS-BU	6.6	5.0	ug		04-Apr-21	00:00	14-May-21	14-May-21	1473427	✓	✓	Filter	Total Metals
Particulates (Filter)																
Total particulate	L2585978-7	NORTH-TSP-357	PART-HIVOL-GRAV-BU	10000	2300	ug		10-Apr-21	00:00		14-May-21	1473131	✓	✓	Filter	Particulates
Total Metals (Filter)																
Arsenic (As)	L2585978-7	NORTH-TSP-357	MET-IO3.5-MS-BU	<3.0	3.0	ug		10-Apr-21	00:00	14-May-21	14-May-21	1473427	✓	✓	Filter	Total Metals

Results of Analysis L2585978

Job Reference NEW GOLD RRP
Report To Sarah Flesher, New Gold Inc. Rainy River Project
Date Received 10-May-2021 8:30
Report Date 4-Jun-2021 17:27
Report Version 1

Parameter	ALS ID	Client Sample ID	ALS Test Code	Results	Detection Limit	Units	Qual	Date Sampled	Time Sampled	Prep Date	Analysis Date	QC Lot	QC Eval	Hold Time Eval	Matrix	Class
Cadmium (Cd)	L2585978-7	NORTH-TSP-357	MET-IO3.5-MS-BU	<2.0	2.0	ug		10-Apr-21	00:00	14-May-21	14-May-21	1473427	✓	✓	Filter	Total Metals
Chromium (Cr)	L2585978-7	NORTH-TSP-357	MET-IO3.5-MS-BU	<5.0	5.0	ug		10-Apr-21	00:00	14-May-21	14-May-21	1473427	✓	✓	Filter	Total Metals
Cobalt (Co)	L2585978-7	NORTH-TSP-357	MET-IO3.5-MS-BU	<2.0	2.0	ug		10-Apr-21	00:00	14-May-21	14-May-21	1473427	✓	✓	Filter	Total Metals
Copper (Cu)	L2585978-7	NORTH-TSP-357	MET-IO3.5-MS-BU	222	4.0	ug		10-Apr-21	00:00	14-May-21	14-May-21	1473427	✓	✓	Filter	Total Metals
Iron (Fe)	L2585978-7	NORTH-TSP-357	MET-IO3.5-MS-BU	140	20	ug		10-Apr-21	00:00	14-May-21	14-May-21	1473427	✓	✓	Filter	Total Metals
Lead (Pb)	L2585978-7	NORTH-TSP-357	MET-IO3.5-MS-BU	<3.0	3.0	ug		10-Apr-21	00:00	14-May-21	14-May-21	1473427	✓	✓	Filter	Total Metals
Manganese (Mn)	L2585978-7	NORTH-TSP-357	MET-IO3.5-MS-BU	3.4	1.0	ug		10-Apr-21	00:00	14-May-21	14-May-21	1473427	✓	✓	Filter	Total Metals
Nickel (Ni)	L2585978-7	NORTH-TSP-357	MET-IO3.5-MS-BU	<3.0	3.0	ug		10-Apr-21	00:00	14-May-21	14-May-21	1473427	✓	✓	Filter	Total Metals
Selenium (Se)	L2585978-7	NORTH-TSP-357	MET-IO3.5-MS-BU	<10	10	ug		10-Apr-21	00:00	14-May-21	14-May-21	1473427	✓	✓	Filter	Total Metals
Vanadium (V)	L2585978-7	NORTH-TSP-357	MET-IO3.5-MS-BU	<5.0	5.0	ug		10-Apr-21	00:00	14-May-21	14-May-21	1473427	✓	✓	Filter	Total Metals
Zinc (Zn)	L2585978-7	NORTH-TSP-357	MET-IO3.5-MS-BU	<5.0	5.0	ug		10-Apr-21	00:00	14-May-21	14-May-21	1473427	✓	✓	Filter	Total Metals
Particulates (Filter)																
Total particulate	L2585978-8	NORTH-TSP-358	PART-HIVOL-GRAV-BU	8900	2300	ug		16-Apr-21	00:00		14-May-21	1473131	✓	✓	Filter	Particulates
Total Metals (Filter)																
Arsenic (As)	L2585978-8	NORTH-TSP-358	MET-IO3.5-MS-BU	<3.0	3.0	ug		16-Apr-21	00:00	14-May-21	14-May-21	1473427	✓	✓	Filter	Total Metals
Cadmium (Cd)	L2585978-8	NORTH-TSP-358	MET-IO3.5-MS-BU	<2.0	2.0	ug		16-Apr-21	00:00	14-May-21	14-May-21	1473427	✓	✓	Filter	Total Metals
Chromium (Cr)	L2585978-8	NORTH-TSP-358	MET-IO3.5-MS-BU	<5.0	5.0	ug		16-Apr-21	00:00	14-May-21	14-May-21	1473427	✓	✓	Filter	Total Metals
Cobalt (Co)	L2585978-8	NORTH-TSP-358	MET-IO3.5-MS-BU	<2.0	2.0	ug		16-Apr-21	00:00	14-May-21	14-May-21	1473427	✓	✓	Filter	Total Metals
Copper (Cu)	L2585978-8	NORTH-TSP-358	MET-IO3.5-MS-BU	221	4.0	ug		16-Apr-21	00:00	14-May-21	14-May-21	1473427	✓	✓	Filter	Total Metals
Iron (Fe)	L2585978-8	NORTH-TSP-358	MET-IO3.5-MS-BU	164	20	ug		16-Apr-21	00:00	14-May-21	14-May-21	1473427	✓	✓	Filter	Total Metals
Lead (Pb)	L2585978-8	NORTH-TSP-358	MET-IO3.5-MS-BU	<3.0	3.0	ug		16-Apr-21	00:00	14-May-21	14-May-21	1473427	✓	✓	Filter	Total Metals
Manganese (Mn)	L2585978-8	NORTH-TSP-358	MET-IO3.5-MS-BU	3.3	1.0	ug		16-Apr-21	00:00	14-May-21	14-May-21	1473427	✓	✓	Filter	Total Metals
Nickel (Ni)	L2585978-8	NORTH-TSP-358	MET-IO3.5-MS-BU	<3.0	3.0	ug		16-Apr-21	00:00	14-May-21	14-May-21	1473427	✓	✓	Filter	Total Metals
Selenium (Se)	L2585978-8	NORTH-TSP-358	MET-IO3.5-MS-BU	<10	10	ug		16-Apr-21	00:00	14-May-21	14-May-21	1473427	✓	✓	Filter	Total Metals
Vanadium (V)	L2585978-8	NORTH-TSP-358	MET-IO3.5-MS-BU	<5.0	5.0	ug		16-Apr-21	00:00	14-May-21	14-May-21	1473427	✓	✓	Filter	Total Metals
Zinc (Zn)	L2585978-8	NORTH-TSP-358	MET-IO3.5-MS-BU	<5.0	5.0	ug		16-Apr-21	00:00	14-May-21	14-May-21	1473427	✓	✓	Filter	Total Metals
Particulates (Filter)																
Total particulate	L2585978-9	NORTH-TSP-359	PART-HIVOL-GRAV-BU	52000	2300	ug		22-Apr-21	00:00		14-May-21	1473131	✓	✓	Filter	Particulates
Total Metals (Filter)																
Arsenic (As)	L2585978-9	NORTH-TSP-359	MET-IO3.5-MS-BU	<3.0	3.0	ug		22-Apr-21	00:00	14-May-21	14-May-21	1473427	✓	✓	Filter	Total Metals
Cadmium (Cd)	L2585978-9	NORTH-TSP-359	MET-IO3.5-MS-BU	<2.0	2.0	ug		22-Apr-21	00:00	14-May-21	14-May-21	1473427	✓	✓	Filter	Total Metals
Chromium (Cr)	L2585978-9	NORTH-TSP-359	MET-IO3.5-MS-BU	<5.0	5.0	ug		22-Apr-21	00:00	14-May-21	14-May-21	1473427	✓	✓	Filter	Total Metals
Cobalt (Co)	L2585978-9	NORTH-TSP-359	MET-IO3.5-MS-BU	<2.0	2.0	ug		22-Apr-21	00:00	14-May-21	14-May-21	1473427	✓	✓	Filter	Total Metals
Copper (Cu)	L2585978-9	NORTH-TSP-359	MET-IO3.5-MS-BU	105	4.0	ug		22-Apr-21	00:00	14-May-21	14-May-21	1473427	✓	✓	Filter	Total Metals
Iron (Fe)	L2585978-9	NORTH-TSP-359	MET-IO3.5-MS-BU	972	20	ug		22-Apr-21	00:00	14-May-21	14-May-21	1473427	✓	✓	Filter	Total Metals
Lead (Pb)	L2585978-9	NORTH-TSP-359	MET-IO3.5-MS-BU	3.3	3.0	ug		22-Apr-21	00:00	14-May-21	14-May-21	1473427	✓	✓	Filter	Total Metals
Manganese (Mn)	L2585978-9	NORTH-TSP-359	MET-IO3.5-MS-BU	35.6	1.0	ug		22-Apr-21	00:00	14-May-21	14-May-21	1473427	✓	✓	Filter	Total Metals
Nickel (Ni)	L2585978-9	NORTH-TSP-359	MET-IO3.5-MS-BU	<3.0	3.0	ug		22-Apr-21	00:00	14-May-21	14-May-21	1473427	✓	✓	Filter	Total Metals
Selenium (Se)	L2585978-9	NORTH-TSP-359	MET-IO3.5-MS-BU	<10	10	ug		22-Apr-21	00:00	14-May-21	14-May-21	1473427	✓	✓	Filter	Total Metals
Vanadium (V)	L2585978-9	NORTH-TSP-359	MET-IO3.5-MS-BU	<5.0	5.0	ug		22-Apr-21	00:00	14-May-21	14-May-21	1473427	✓	✓	Filter	Total Metals
Zinc (Zn)	L2585978-9	NORTH-TSP-359	MET-IO3.5-MS-BU	26.9	5.0	ug		22-Apr-21	00:00	14-May-21	14-May-21	1473427	✓	✓	Filter	Total Metals
Particulates (Filter)																
Total particulate	L2585978-10	NORTH-TSP-360	PART-HIVOL-GRAV-BU	36800	2300	ug		28-Apr-21	00:00		14-May-21	1473131	✓	✓	Filter	Particulates
Total Metals (Filter)																
Arsenic (As)	L2585978-10	NORTH-TSP-360	MET-IO3.5-MS-BU	<3.0	3.0	ug		28-Apr-21	00:00	14-May-21	14-May-21	1473427	✓	✓	Filter	Total Metals
Cadmium (Cd)	L2585978-10	NORTH-TSP-360	MET-IO3.5-MS-BU	<2.0	2.0	ug		28-Apr-21	00:00	14-May-21	14-May-21	1473427	✓	✓	Filter	Total Metals
Chromium (Cr)	L2585978-10	NORTH-TSP-360	MET-IO3.5-MS-BU	<5.0	5.0	ug		28-Apr-21	00:00	14-May-21	14-May-21	1473427	✓	✓	Filter	Total Metals
Cobalt (Co)	L2585978-10	NORTH-TSP-360	MET-IO3.5-MS-BU	<2.0	2.0	ug		28-Apr-21	00:00	14-May-21	14-May-21	1473427	✓	✓	Filter	Total Metals

Results of Analysis L2585978

Job Reference NEW GOLD RRP
Report To Sarah Flesher, New Gold Inc. Rainy River Project
Date Received 10-May-2021 8:30
Report Date 4-Jun-2021 17:27
Report Version 1

Parameter	ALS ID	Client Sample ID	ALS Test Code	Results	Detection Limit	Units	Qual	Date Sampled	Time Sampled	Prep Date	Analysis Date	QC Lot	QC Eval	Hold Time Eval	Matrix	Class
Copper (Cu)	L2585978-10	NORTH-TSP-360	MET-IO3.5-MS-BU	186	4.0	ug		28-Apr-21	00:00	14-May-21	14-May-21	1473427	✓	✓	Filter	Total Metals
Iron (Fe)	L2585978-10	NORTH-TSP-360	MET-IO3.5-MS-BU	635	20	ug		28-Apr-21	00:00	14-May-21	14-May-21	1473427	✓	✓	Filter	Total Metals
Lead (Pb)	L2585978-10	NORTH-TSP-360	MET-IO3.5-MS-BU	<3.0	3.0	ug		28-Apr-21	00:00	14-May-21	14-May-21	1473427	✓	✓	Filter	Total Metals
Manganese (Mn)	L2585978-10	NORTH-TSP-360	MET-IO3.5-MS-BU	20.3	1.0	ug		28-Apr-21	00:00	14-May-21	14-May-21	1473427	✓	✓	Filter	Total Metals
Nickel (Ni)	L2585978-10	NORTH-TSP-360	MET-IO3.5-MS-BU	<3.0	3.0	ug		28-Apr-21	00:00	14-May-21	14-May-21	1473427	✓	✓	Filter	Total Metals
Selenium (Se)	L2585978-10	NORTH-TSP-360	MET-IO3.5-MS-BU	<10	10	ug		28-Apr-21	00:00	14-May-21	14-May-21	1473427	✓	✓	Filter	Total Metals
Vanadium (V)	L2585978-10	NORTH-TSP-360	MET-IO3.5-MS-BU	<5.0	5.0	ug		28-Apr-21	00:00	14-May-21	14-May-21	1473427	✓	✓	Filter	Total Metals
Zinc (Zn)	L2585978-10	NORTH-TSP-360	MET-IO3.5-MS-BU	14.3	5.0	ug		28-Apr-21	00:00	14-May-21	14-May-21	1473427	✓	✓	Filter	Total Metals
Particulates (Filter)																
Total particulate	L2585978-11	NORTHWEST-TSP-356	PART-HIVOL-GRAV-BU	114000	2300	ug		04-Apr-21	00:00		14-May-21	1473131	✓	✓	Filter	Particulates
Total Metals (Filter)																
Arsenic (As)	L2585978-11	NORTHWEST-TSP-356	MET-IO3.5-MS-BU	<3.0	3.0	ug		04-Apr-21	00:00	14-May-21	14-May-21	1473427	✓	✓	Filter	Total Metals
Cadmium (Cd)	L2585978-11	NORTHWEST-TSP-356	MET-IO3.5-MS-BU	<2.0	2.0	ug		04-Apr-21	00:00	14-May-21	14-May-21	1473427	✓	✓	Filter	Total Metals
Chromium (Cr)	L2585978-11	NORTHWEST-TSP-356	MET-IO3.5-MS-BU	7.4	5.0	ug		04-Apr-21	00:00	14-May-21	14-May-21	1473427	✓	✓	Filter	Total Metals
Cobalt (Co)	L2585978-11	NORTHWEST-TSP-356	MET-IO3.5-MS-BU	<2.0	2.0	ug		04-Apr-21	00:00	14-May-21	14-May-21	1473427	✓	✓	Filter	Total Metals
Copper (Cu)	L2585978-11	NORTHWEST-TSP-356	MET-IO3.5-MS-BU	91.8	4.0	ug		04-Apr-21	00:00	14-May-21	14-May-21	1473427	✓	✓	Filter	Total Metals
Iron (Fe)	L2585978-11	NORTHWEST-TSP-356	MET-IO3.5-MS-BU	3130	20	ug		04-Apr-21	00:00	14-May-21	14-May-21	1473427	✓	✓	Filter	Total Metals
Lead (Pb)	L2585978-11	NORTHWEST-TSP-356	MET-IO3.5-MS-BU	7.8	3.0	ug		04-Apr-21	00:00	14-May-21	14-May-21	1473427	✓	✓	Filter	Total Metals
Manganese (Mn)	L2585978-11	NORTHWEST-TSP-356	MET-IO3.5-MS-BU	134	1.0	ug		04-Apr-21	00:00	14-May-21	14-May-21	1473427	✓	✓	Filter	Total Metals
Nickel (Ni)	L2585978-11	NORTHWEST-TSP-356	MET-IO3.5-MS-BU	6.9	3.0	ug		04-Apr-21	00:00	14-May-21	14-May-21	1473427	✓	✓	Filter	Total Metals
Selenium (Se)	L2585978-11	NORTHWEST-TSP-356	MET-IO3.5-MS-BU	<10	10	ug		04-Apr-21	00:00	14-May-21	14-May-21	1473427	✓	✓	Filter	Total Metals
Vanadium (V)	L2585978-11	NORTHWEST-TSP-356	MET-IO3.5-MS-BU	5.8	5.0	ug		04-Apr-21	00:00	14-May-21	14-May-21	1473427	✓	✓	Filter	Total Metals
Zinc (Zn)	L2585978-11	NORTHWEST-TSP-356	MET-IO3.5-MS-BU	79.2	5.0	ug		04-Apr-21	00:00	14-May-21	14-May-21	1473427	✓	✓	Filter	Total Metals
Particulates (Filter)																
Total particulate	L2585978-12	NORTHWEST-TSP-357	PART-HIVOL-GRAV-BU	12400	2300	ug		10-Apr-21	00:00		14-May-21	1473131	✓	✓	Filter	Particulates
Total Metals (Filter)																
Arsenic (As)	L2585978-12	NORTHWEST-TSP-357	MET-IO3.5-MS-BU	<3.0	3.0	ug		10-Apr-21	00:00	14-May-21	14-May-21	1473427	✓	✓	Filter	Total Metals
Cadmium (Cd)	L2585978-12	NORTHWEST-TSP-357	MET-IO3.5-MS-BU	<2.0	2.0	ug		10-Apr-21	00:00	14-May-21	14-May-21	1473427	✓	✓	Filter	Total Metals
Chromium (Cr)	L2585978-12	NORTHWEST-TSP-357	MET-IO3.5-MS-BU	<5.0	5.0	ug		10-Apr-21	00:00	14-May-21	14-May-21	1473427	✓	✓	Filter	Total Metals
Cobalt (Co)	L2585978-12	NORTHWEST-TSP-357	MET-IO3.5-MS-BU	<2.0	2.0	ug		10-Apr-21	00:00	14-May-21	14-May-21	1473427	✓	✓	Filter	Total Metals
Copper (Cu)	L2585978-12	NORTHWEST-TSP-357	MET-IO3.5-MS-BU	73.4	4.0	ug		10-Apr-21	00:00	14-May-21	14-May-21	1473427	✓	✓	Filter	Total Metals
Iron (Fe)	L2585978-12	NORTHWEST-TSP-357	MET-IO3.5-MS-BU	185	20	ug		10-Apr-21	00:00	14-May-21	14-May-21	1473427	✓	✓	Filter	Total Metals
Lead (Pb)	L2585978-12	NORTHWEST-TSP-357	MET-IO3.5-MS-BU	<3.0	3.0	ug		10-Apr-21	00:00	14-May-21	14-May-21	1473427	✓	✓	Filter	Total Metals
Manganese (Mn)	L2585978-12	NORTHWEST-TSP-357	MET-IO3.5-MS-BU	5.0	1.0	ug		10-Apr-21	00:00	14-May-21	14-May-21	1473427	✓	✓	Filter	Total Metals
Nickel (Ni)	L2585978-12	NORTHWEST-TSP-357	MET-IO3.5-MS-BU	<3.0	3.0	ug		10-Apr-21	00:00	14-May-21	14-May-21	1473427	✓	✓	Filter	Total Metals
Selenium (Se)	L2585978-12	NORTHWEST-TSP-357	MET-IO3.5-MS-BU	<10	10	ug		10-Apr-21	00:00	14-May-21	14-May-21	1473427	✓	✓	Filter	Total Metals
Vanadium (V)	L2585978-12	NORTHWEST-TSP-357	MET-IO3.5-MS-BU	<5.0	5.0	ug		10-Apr-21	00:00	14-May-21	14-May-21	1473427	✓	✓	Filter	Total Metals
Zinc (Zn)	L2585978-12	NORTHWEST-TSP-357	MET-IO3.5-MS-BU	<5.0	5.0	ug		10-Apr-21	00:00	14-May-21	14-May-21	1473427	✓	✓	Filter	Total Metals
Particulates (Filter)																
Total particulate	L2585978-13	NORTHWEST-TSP-358	PART-HIVOL-GRAV-BU	5800	2300	ug		16-Apr-21	00:00		14-May-21	1473131	✓	✓	Filter	Particulates
Total Metals (Filter)																
Arsenic (As)	L2585978-13	NORTHWEST-TSP-358	MET-IO3.5-MS-BU	<3.0	3.0	ug		16-Apr-21	00:00	14-May-21	14-May-21	1473427	✓	✓	Filter	Total Metals
Cadmium (Cd)	L2585978-13	NORTHWEST-TSP-358	MET-IO3.5-MS-BU	<2.0	2.0	ug		16-Apr-21	00:00	14-May-21	14-May-21	1473427	✓	✓	Filter	Total Metals
Chromium (Cr)	L2585978-13	NORTHWEST-TSP-358	MET-IO3.5-MS-BU	<5.0	5.0	ug		16-Apr-21	00:00	14-May-21	14-May-21	1473427	✓	✓	Filter	Total Metals
Cobalt (Co)	L2585978-13	NORTHWEST-TSP-358	MET-IO3.5-MS-BU	<2.0	2.0	ug		16-Apr-21	00:00	14-May-21	14-May-21	1473427	✓	✓	Filter	Total Metals
Copper (Cu)	L2585978-13	NORTHWEST-TSP-358	MET-IO3.5-MS-BU	32.5	4.0	ug		16-Apr-21	00:00	14-May-21	14-May-21	1473427	✓	✓	Filter	Total Metals
Iron (Fe)	L2585978-13	NORTHWEST-TSP-358	MET-IO3.5-MS-BU	133	20	ug		16-Apr-21	00:00	14-May-21	14-May-21	1473427	✓	✓	Filter	Total Metals
Lead (Pb)	L2585978-13	NORTHWEST-TSP-358	MET-IO3.5-MS-BU	<3.0	3.0	ug		16-Apr-21	00:00	14-May-21	14-May-21	1473427	✓	✓	Filter	Total Metals

Results of Analysis L2585978

Job Reference NEW GOLD RRP
Report To Sarah Flesher, New Gold Inc. Rainy River Project
Date Received 10-May-2021 8:30
Report Date 4-Jun-2021 17:27
Report Version 1

Parameter	ALS ID	Client Sample ID	ALS Test Code	Results	Detection Limit	Units	Qual	Date Sampled	Time Sampled	Prep Date	Analysis Date	QC Lot	QC Eval	Hold Time Eval	Matrix	Class
Manganese (Mn)	L2585978-13	NORTHWEST-TSP-358	MET-IO3.5-MS-BU	3.8	1.0	ug		16-Apr-21	00:00	14-May-21	14-May-21	1473427	✓	✓	Filter	Total Metals
Nickel (Ni)	L2585978-13	NORTHWEST-TSP-358	MET-IO3.5-MS-BU	<3.0	3.0	ug		16-Apr-21	00:00	14-May-21	14-May-21	1473427	✓	✓	Filter	Total Metals
Selenium (Se)	L2585978-13	NORTHWEST-TSP-358	MET-IO3.5-MS-BU	<10	10	ug		16-Apr-21	00:00	14-May-21	14-May-21	1473427	✓	✓	Filter	Total Metals
Vanadium (V)	L2585978-13	NORTHWEST-TSP-358	MET-IO3.5-MS-BU	<5.0	5.0	ug		16-Apr-21	00:00	14-May-21	14-May-21	1473427	✓	✓	Filter	Total Metals
Zinc (Zn)	L2585978-13	NORTHWEST-TSP-358	MET-IO3.5-MS-BU	9.5	5.0	ug		16-Apr-21	00:00	14-May-21	14-May-21	1473427	✓	✓	Filter	Total Metals
Particulates (Filter)																
Total particulate	L2585978-14	NORTHWEST-TSP-359	PART-HIVOL-GRAV-BU	51800	2300	ug		22-Apr-21	00:00		14-May-21	1473131	✓	✓	Filter	Particulates
Total Metals (Filter)																
Arsenic (As)	L2585978-14	NORTHWEST-TSP-359	MET-IO3.5-MS-BU	<3.0	3.0	ug		22-Apr-21	00:00	14-May-21	14-May-21	1473427	✓	✓	Filter	Total Metals
Cadmium (Cd)	L2585978-14	NORTHWEST-TSP-359	MET-IO3.5-MS-BU	<2.0	2.0	ug		22-Apr-21	00:00	14-May-21	14-May-21	1473427	✓	✓	Filter	Total Metals
Chromium (Cr)	L2585978-14	NORTHWEST-TSP-359	MET-IO3.5-MS-BU	<5.0	5.0	ug		22-Apr-21	00:00	14-May-21	14-May-21	1473427	✓	✓	Filter	Total Metals
Cobalt (Co)	L2585978-14	NORTHWEST-TSP-359	MET-IO3.5-MS-BU	<2.0	2.0	ug		22-Apr-21	00:00	14-May-21	14-May-21	1473427	✓	✓	Filter	Total Metals
Copper (Cu)	L2585978-14	NORTHWEST-TSP-359	MET-IO3.5-MS-BU	58.5	4.0	ug		22-Apr-21	00:00	14-May-21	14-May-21	1473427	✓	✓	Filter	Total Metals
Iron (Fe)	L2585978-14	NORTHWEST-TSP-359	MET-IO3.5-MS-BU	936	20	ug		22-Apr-21	00:00	14-May-21	14-May-21	1473427	✓	✓	Filter	Total Metals
Lead (Pb)	L2585978-14	NORTHWEST-TSP-359	MET-IO3.5-MS-BU	<3.0	3.0	ug		22-Apr-21	00:00	14-May-21	14-May-21	1473427	✓	✓	Filter	Total Metals
Manganese (Mn)	L2585978-14	NORTHWEST-TSP-359	MET-IO3.5-MS-BU	30.8	1.0	ug		22-Apr-21	00:00	14-May-21	14-May-21	1473427	✓	✓	Filter	Total Metals
Nickel (Ni)	L2585978-14	NORTHWEST-TSP-359	MET-IO3.5-MS-BU	<3.0	3.0	ug		22-Apr-21	00:00	14-May-21	14-May-21	1473427	✓	✓	Filter	Total Metals
Selenium (Se)	L2585978-14	NORTHWEST-TSP-359	MET-IO3.5-MS-BU	<10	10	ug		22-Apr-21	00:00	14-May-21	14-May-21	1473427	✓	✓	Filter	Total Metals
Vanadium (V)	L2585978-14	NORTHWEST-TSP-359	MET-IO3.5-MS-BU	<5.0	5.0	ug		22-Apr-21	00:00	14-May-21	14-May-21	1473427	✓	✓	Filter	Total Metals
Zinc (Zn)	L2585978-14	NORTHWEST-TSP-359	MET-IO3.5-MS-BU	14.9	5.0	ug		22-Apr-21	00:00	14-May-21	14-May-21	1473427	✓	✓	Filter	Total Metals
Particulates (Filter)																
Total particulate	L2585978-15	NORTHWEST-TSP-360	PART-HIVOL-GRAV-BU	35700	2300	ug		28-Apr-21	00:00		14-May-21	1473131	✓	✓	Filter	Particulates
Total Metals (Filter)																
Arsenic (As)	L2585978-15	NORTHWEST-TSP-360	MET-IO3.5-MS-BU	<3.0	3.0	ug		28-Apr-21	00:00	14-May-21	14-May-21	1473427	✓	✓	Filter	Total Metals
Cadmium (Cd)	L2585978-15	NORTHWEST-TSP-360	MET-IO3.5-MS-BU	<2.0	2.0	ug		28-Apr-21	00:00	14-May-21	14-May-21	1473427	✓	✓	Filter	Total Metals
Chromium (Cr)	L2585978-15	NORTHWEST-TSP-360	MET-IO3.5-MS-BU	<5.0	5.0	ug		28-Apr-21	00:00	14-May-21	14-May-21	1473427	✓	✓	Filter	Total Metals
Cobalt (Co)	L2585978-15	NORTHWEST-TSP-360	MET-IO3.5-MS-BU	<2.0	2.0	ug		28-Apr-21	00:00	14-May-21	14-May-21	1473427	✓	✓	Filter	Total Metals
Copper (Cu)	L2585978-15	NORTHWEST-TSP-360	MET-IO3.5-MS-BU	99.0	4.0	ug		28-Apr-21	00:00	14-May-21	14-May-21	1473427	✓	✓	Filter	Total Metals
Iron (Fe)	L2585978-15	NORTHWEST-TSP-360	MET-IO3.5-MS-BU	734	20	ug		28-Apr-21	00:00	14-May-21	14-May-21	1473427	✓	✓	Filter	Total Metals
Lead (Pb)	L2585978-15	NORTHWEST-TSP-360	MET-IO3.5-MS-BU	<3.0	3.0	ug		28-Apr-21	00:00	14-May-21	14-May-21	1473427	✓	✓	Filter	Total Metals
Manganese (Mn)	L2585978-15	NORTHWEST-TSP-360	MET-IO3.5-MS-BU	21.2	1.0	ug		28-Apr-21	00:00	14-May-21	14-May-21	1473427	✓	✓	Filter	Total Metals
Nickel (Ni)	L2585978-15	NORTHWEST-TSP-360	MET-IO3.5-MS-BU	<3.0	3.0	ug		28-Apr-21	00:00	14-May-21	14-May-21	1473427	✓	✓	Filter	Total Metals
Selenium (Se)	L2585978-15	NORTHWEST-TSP-360	MET-IO3.5-MS-BU	<10	10	ug		28-Apr-21	00:00	14-May-21	14-May-21	1473427	✓	✓	Filter	Total Metals
Vanadium (V)	L2585978-15	NORTHWEST-TSP-360	MET-IO3.5-MS-BU	<5.0	5.0	ug		28-Apr-21	00:00	14-May-21	14-May-21	1473427	✓	✓	Filter	Total Metals
Zinc (Zn)	L2585978-15	NORTHWEST-TSP-360	MET-IO3.5-MS-BU	16.4	5.0	ug		28-Apr-21	00:00	14-May-21	14-May-21	1473427	✓	✓	Filter	Total Metals
Particulates (Filter)																
Total particulate	L2585978-16	SOUTH-PM2.5-356	PART-M212 F-GRAV-BU	38	15	ug		04-Apr-21	00:00		27-May-21	1479497	✓	✓	Filter	Particulates
Total particulate	L2585978-17	SOUTH-PM2.5-357	PART-M212 F-GRAV-BU	<15	15	ug		10-Apr-21	00:00		27-May-21	1479497	✓	✓	Filter	Particulates
Total particulate	L2585978-18	SOUTH-PM2.5-358	PART-M212 F-GRAV-BU	53	15	ug		16-Apr-21	00:00		27-May-21	1479497	✓	✓	Filter	Particulates
Total particulate	L2585978-19	SOUTH-PM2.5-359	PART-M212 F-GRAV-BU	101	15	ug		22-Apr-21	00:00		27-May-21	1479497	✓	✓	Filter	Particulates
Total particulate	L2585978-20	SOUTH-PM2.5-360	PART-M212 F-GRAV-BU	161	15	ug		28-Apr-21	00:00		27-May-21	1479497	✓	✓	Filter	Particulates
Total particulate	L2585978-21	NORTH-PM2.5-356	PART-M212 F-GRAV-BU	79	15	ug		04-Apr-21	00:00		27-May-21	1479497	✓	✓	Filter	Particulates
Total particulate	L2585978-22	NORTH-PM2.5-357	PART-M212 F-GRAV-BU	<15	15	ug		10-Apr-21	00:00		27-May-21	1479497	✓	✓	Filter	Particulates
Total particulate	L2585978-23	NORTH-PM2.5-358	PART-M212 F-GRAV-BU	<15	15	ug		16-Apr-21	00:00		27-May-21	1479497	✓	✓	Filter	Particulates
Total particulate	L2585978-24	NORTH-PM2.5-359	PART-M212 F-GRAV-BU	34	15	ug		22-Apr-21	00:00		27-May-21	1479497	✓	✓	Filter	Particulates
Total particulate	L2585978-25	NORTH-PM2.5-360	PART-M212 F-GRAV-BU	<15	15	ug		28-Apr-21	00:00		27-May-21	1479497	✓	✓	Filter	Particulates
Total particulate	L2585978-26	NORTHWEST-PM2.5-356	PART-M212 F-GRAV-BU	99	15	ug		04-Apr-21	00:00		27-May-21	1479497	✓	✓	Filter	Particulates
Total particulate	L2585978-27	NORTHWEST-PM2.5-357	PART-M212 F-GRAV-BU	34	15	ug		10-Apr-21	00:00		27-May-21	1479497	✓	✓	Filter	Particulates
Total particulate	L2585978-28	NORTHWEST-PM2.5-358	PART-M212 F-GRAV-BU	<15	15	ug		16-Apr-21	00:00		27-May-21	1479497	✓	✓	Filter	Particulates

Results of Analysis L2585978

Job Reference NEW GOLD RRP
Report To Sarah Flesher, New Gold Inc. Rainy River Project
Date Received 10-May-2021 8:30
Report Date 4-Jun-2021 17:27
Report Version 1

Parameter	ALS ID	Client Sample ID	ALS Test Code	Results	Detection Limit	Units	Qual	Date Sampled	Time Sampled	Prep Date	Analysis Date	QC Lot	QC Eval	Hold Time Eval	Matrix	Class
Total particulate	L2585978-29	NORTHWEST-PM2.5-359	PART-M212 F-GRAV-BU	50	15	ug		22-Apr-21	00:00		27-May-21	1479497	✓	✓	Filter	Particulates
Total particulate	L2585978-30	NORTHWEST-PM2.5-360	PART-M212 F-GRAV-BU	76	15	ug		28-Apr-21	00:00		27-May-21	1479497	✓	✓	Filter	Particulates
Particulates (Dustfall)																
Fixed Dustfall	L2585978-31	NOP1-DUSTFALL-4	DUSTFALLS-ALL-DM2-VA	3.81	0.10	mg/dm2.day		03-May-21	00:00		26-May-21	1478236	✓	✓	Dustfall	Particulates
Volatile Dustfall	L2585978-31	NOP1-DUSTFALL-4	DUSTFALLS-ALL-DM2-VA	0.16	0.10	mg/dm2.day		03-May-21	00:00		26-May-21	1478236	✓	✓	Dustfall	Particulates
Total Dustfall	L2585978-31	NOP1-DUSTFALL-4	DUSTFALLS-ALL-DM2-VA	3.96	0.10	mg/dm2.day		03-May-21	00:00		26-May-21	1478236	✓	✓	Dustfall	Particulates
Fixed Insoluble Dustfall	L2585978-31	NOP1-DUSTFALL-4	DUSTFALLS-ALL-DM2-VA	3.47	0.10	mg/dm2.day		03-May-21	00:00		26-May-21	1478236	✓	✓	Dustfall	Particulates
Volatile Insoluble Dustfall	L2585978-31	NOP1-DUSTFALL-4	DUSTFALLS-ALL-DM2-VA	0.16	0.10	mg/dm2.day		03-May-21	00:00		26-May-21	1478236	✓	✓	Dustfall	Particulates
Total Insoluble Dustfall	L2585978-31	NOP1-DUSTFALL-4	DUSTFALLS-ALL-DM2-VA	3.63	0.10	mg/dm2.day		03-May-21	00:00		26-May-21	1478236	✓	✓	Dustfall	Particulates
Fixed Soluble Dustfall	L2585978-31	NOP1-DUSTFALL-4	DUSTFALLS-ALL-DM2-VA	0.34	0.10	mg/dm2.day		03-May-21	00:00		26-May-21	1478236	✓	✓	Dustfall	Particulates
Volatile Soluble Dustfall	L2585978-31	NOP1-DUSTFALL-4	DUSTFALLS-ALL-DM2-VA	<0.10	0.10	mg/dm2.day		03-May-21	00:00		26-May-21	1478236	✓	✓	Dustfall	Particulates
Total Soluble Dustfall	L2585978-31	NOP1-DUSTFALL-4	DUSTFALLS-ALL-DM2-VA	0.34	0.10	mg/dm2.day		03-May-21	00:00		26-May-21	1478236	✓	✓	Dustfall	Particulates
Metals (Dustfall)																
Aluminum (Al)-Total	L2585978-31	NOP1-DUSTFALL-4	MET-DUST(DM2)-MS-VA	0.0600	0.000043	mg/dm2.day		03-May-21	00:00	20-May-21	25-May-21	1481631	×	✓	Dustfall	Metals
Antimony (Sb)-Total	L2585978-31	NOP1-DUSTFALL-4	MET-DUST(DM2)-MS-VA	<0.0000085	0.0000085	mg/dm2.day	DLB	03-May-21	00:00	20-May-21	25-May-21	1481631	✓	✓	Dustfall	Metals
Arsenic (As)-Total	L2585978-31	NOP1-DUSTFALL-4	MET-DUST(DM2)-MS-VA	0.0000648	0.0000014	mg/dm2.day		03-May-21	00:00	20-May-21	25-May-21	1481631	✓	✓	Dustfall	Metals
Barium (Ba)-Total	L2585978-31	NOP1-DUSTFALL-4	MET-DUST(DM2)-MS-VA	0.000304	0.00000071	mg/dm2.day		03-May-21	00:00	20-May-21	25-May-21	1481631	×	✓	Dustfall	Metals
Beryllium (Be)-Total	L2585978-31	NOP1-DUSTFALL-4	MET-DUST(DM2)-MS-VA	<0.0000071	0.0000071	mg/dm2.day		03-May-21	00:00	20-May-21	25-May-21	1481631	✓	✓	Dustfall	Metals
Bismuth (Bi)-Total	L2585978-31	NOP1-DUSTFALL-4	MET-DUST(DM2)-MS-VA	<0.0000071	0.0000071	mg/dm2.day		03-May-21	00:00	20-May-21	25-May-21	1481631	✓	✓	Dustfall	Metals
Boron (B)-Total	L2585978-31	NOP1-DUSTFALL-4	MET-DUST(DM2)-MS-VA	<0.00014	0.00014	mg/dm2.day		03-May-21	00:00	20-May-21	25-May-21	1481631	✓	✓	Dustfall	Metals
Cadmium (Cd)-Total	L2585978-31	NOP1-DUSTFALL-4	MET-DUST(DM2)-MS-VA	0.0000106	0.00000071	mg/dm2.day		03-May-21	00:00	20-May-21	25-May-21	1481631	✓	✓	Dustfall	Metals
Calcium (Ca)-Total	L2585978-31	NOP1-DUSTFALL-4	MET-DUST(DM2)-MS-VA	0.127	0.00028	mg/dm2.day		03-May-21	00:00	20-May-21	25-May-21	1481631	✓	✓	Dustfall	Metals
Chromium (Cr)-Total	L2585978-31	NOP1-DUSTFALL-4	MET-DUST(DM2)-MS-VA	0.0000558	0.0000071	mg/dm2.day		03-May-21	00:00	20-May-21	25-May-21	1481631	✓	✓	Dustfall	Metals
Cobalt (Co)-Total	L2585978-31	NOP1-DUSTFALL-4	MET-DUST(DM2)-MS-VA	0.0000175	0.0000014	mg/dm2.day		03-May-21	00:00	20-May-21	25-May-21	1481631	✓	✓	Dustfall	Metals
Copper (Cu)-Total	L2585978-31	NOP1-DUSTFALL-4	MET-DUST(DM2)-MS-VA	0.000230	0.0000071	mg/dm2.day		03-May-21	00:00	20-May-21	25-May-21	1481631	×	✓	Dustfall	Metals
Iron (Fe)-Total	L2585978-31	NOP1-DUSTFALL-4	MET-DUST(DM2)-MS-VA	0.0485	0.00043	mg/dm2.day		03-May-21	00:00	20-May-21	25-May-21	1481631	×	✓	Dustfall	Metals
Lead (Pb)-Total	L2585978-31	NOP1-DUSTFALL-4	MET-DUST(DM2)-MS-VA	0.000147	0.00000071	mg/dm2.day		03-May-21	00:00	20-May-21	25-May-21	1481631	×	✓	Dustfall	Metals
Lithium (Li)-Total	L2585978-31	NOP1-DUSTFALL-4	MET-DUST(DM2)-MS-VA	0.000089	0.000071	mg/dm2.day		03-May-21	00:00	20-May-21	25-May-21	1481631	✓	✓	Dustfall	Metals
Magnesium (Mg)-Total	L2585978-31	NOP1-DUSTFALL-4	MET-DUST(DM2)-MS-VA	0.0258	0.000071	mg/dm2.day		03-May-21	00:00	20-May-21	25-May-21	1481631	×	✓	Dustfall	Metals
Manganese (Mn)-Total	L2585978-31	NOP1-DUSTFALL-4	MET-DUST(DM2)-MS-VA	0.00208	0.0000014	mg/dm2.day		03-May-21	00:00	20-May-21	25-May-21	1481631	×	✓	Dustfall	Metals
Molybdenum (Mo)-Total	L2585978-31	NOP1-DUSTFALL-4	MET-DUST(DM2)-MS-VA	0.00000699	0.00000071	mg/dm2.day		03-May-21	00:00	20-May-21	25-May-21	1481631	✓	✓	Dustfall	Metals
Nickel (Ni)-Total	L2585978-31	NOP1-DUSTFALL-4	MET-DUST(DM2)-MS-VA	0.0000426	0.0000071	mg/dm2.day		03-May-21	00:00	20-May-21	25-May-21	1481631	✓	✓	Dustfall	Metals
Phosphorus (P)-Total	L2585978-31	NOP1-DUSTFALL-4	MET-DUST(DM2)-MS-VA	<0.0050	0.0050	mg/dm2.day	DLB	03-May-21	00:00	20-May-21	25-May-21	1481631	✓	✓	Dustfall	Metals
Potassium (K)-Total	L2585978-31	NOP1-DUSTFALL-4	MET-DUST(DM2)-MS-VA	0.0276	0.00071	mg/dm2.day		03-May-21	00:00	20-May-21	25-May-21	1481631	×	✓	Dustfall	Metals
Selenium (Se)-Total	L2585978-31	NOP1-DUSTFALL-4	MET-DUST(DM2)-MS-VA	<0.000014	0.000014	mg/dm2.day		03-May-21	00:00	20-May-21	25-May-21	1481631	✓	✓	Dustfall	Metals
Silicon (Si)-Total	L2585978-31	NOP1-DUSTFALL-4	MET-DUST(DM2)-MS-VA	0.102	0.00071	mg/dm2.day		03-May-21	00:00	20-May-21	25-May-21	1481631	×	✓	Dustfall	Metals
Silver (Ag)-Total	L2585978-31	NOP1-DUSTFALL-4	MET-DUST(DM2)-MS-VA	0.00000085	0.00000014	mg/dm2.day		03-May-21	00:00	02-Jun-21	02-Jun-21	1481631	✓	✓	Dustfall	Metals
Sodium (Na)-Total	L2585978-31	NOP1-DUSTFALL-4	MET-DUST(DM2)-MS-VA	0.00954	0.00071	mg/dm2.day		03-May-21	00:00	20-May-21	25-May-21	1481631	✓	✓	Dustfall	Metals
Strontium (Sr)-Total	L2585978-31	NOP1-DUSTFALL-4	MET-DUST(DM2)-MS-VA	0.000317	0.0000014	mg/dm2.day		03-May-21	00:00	20-May-21	25-May-21	1481631	✓	✓	Dustfall	Metals
Thallium (Tl)-Total	L2585978-31	NOP1-DUSTFALL-4	MET-DUST(DM2)-MS-VA	<0.0000014	0.0000014	mg/dm2.day		03-May-21	00:00	20-May-21	25-May-21	1481631	✓	✓	Dustfall	Metals
Tin (Sn)-Total	L2585978-31	NOP1-DUSTFALL-4	MET-DUST(DM2)-MS-VA	<0.0000028	0.0000028	mg/dm2.day	DLB	03-May-21	00:00	20-May-21	25-May-21	1481631	✓	✓	Dustfall	Metals
Titanium (Ti)-Total	L2585978-31	NOP1-DUSTFALL-4	MET-DUST(DM2)-MS-VA	0.00101	0.00014	mg/dm2.day		03-May-21	00:00	20-May-21	25-May-21	1481631	✓	✓	Dustfall	Metals
Uranium (U)-Total	L2585978-31	NOP1-DUSTFALL-4	MET-DUST(DM2)-MS-VA	0.00000187	0.00000014	mg/dm2.day		03-May-21	00:00	20-May-21	25-May-21	1481631	✓	✓	Dustfall	Metals
Vanadium (V)-Total	L2585978-31	NOP1-DUSTFALL-4	MET-DUST(DM2)-MS-VA	0.000071	0.000014	mg/dm2.day		03-May-21	00:00	20-May-21	25-May-21	1481631	✓	✓	Dustfall	Metals
Zinc (Zn)-Total	L2585978-31	NOP1-DUSTFALL-4	MET-DUST(DM2)-MS-VA	0.00286	0.000043	mg/dm2.day		03-May-21	00:00	20-May-21	25-May-21	1481631	×	✓	Dustfall	Metals
Particulates (Dustfall)																
Fixed Dustfall	L2585978-32	CP1-DUSTFALL-4	DUSTFALLS-ALL-DM2-VA	1.00	0.10	mg/dm2.day		03-May-21	00:00		26-May-21	1478236	✓	✓	Dustfall	Particulates
Volatile Dustfall	L2585978-32	CP1-DUSTFALL-4	DUSTFALLS-ALL-DM2-VA	0.82	0.10	mg/dm2.day		03-May-21	00:00		26-May-21	1478236	✓	✓	Dustfall	Particulates
Total Dustfall	L2585978-32	CP1-DUSTFALL-4	DUSTFALLS-ALL-DM2-VA	1.82	0.10	mg/dm2.day		03-May-21	00:00		26-May-21	1478236	✓	✓	Dustfall	Particulates
Fixed Insoluble Dustfall	L2585978-32	CP1-DUSTFALL-4	DUSTFALLS-ALL-DM2-VA	0.48	0.10	mg/dm2.day		03-May-21	00:00		26-May-21	1478236	✓	✓	Dustfall	Particulates
Volatile Insoluble Dustfall	L2585978-32	CP1-DUSTFALL-4	DUSTFALLS-ALL-DM2-VA	0.53	0.10	mg/dm2.day		03-May-21	00:00		26-May-21	1478236	✓	✓	Dustfall	Particulates
Total Insoluble Dustfall	L2585978-32	CP1-DUSTFALL-4	DUSTFALLS-ALL-DM2-VA	1.00	0.10	mg/dm2.day		03-May-21	00:00		26-May-21	1478236	✓	✓	Dustfall	Particulates

Results of Analysis L2585978

Job Reference NEW GOLD RRP
Report To Sarah Flesher, New Gold Inc. Rainy River Project
Date Received 10-May-2021 8:30
Report Date 4-Jun-2021 17:27
Report Version 1

Parameter	ALS ID	Client Sample ID	ALS Test Code	Results	Detection Limit	Units	Qual	Date Sampled	Time Sampled	Prep Date	Analysis Date	QC Lot	QC Eval	Hold Time Eval	Matrix	Class
Fixed Soluble Dustfall	L2585978-32	CP1-DUSTFALL-4	DUSTFALLS-ALL-DM2-VA	0.52	0.10	mg/dm2.day		03-May-21	00:00		26-May-21	1478236	✓	✓	Dustfall	Particulates
Volatile Soluble Dustfall	L2585978-32	CP1-DUSTFALL-4	DUSTFALLS-ALL-DM2-VA	0.30	0.10	mg/dm2.day		03-May-21	00:00		26-May-21	1478236	✓	✓	Dustfall	Particulates
Total Soluble Dustfall	L2585978-32	CP1-DUSTFALL-4	DUSTFALLS-ALL-DM2-VA	0.82	0.10	mg/dm2.day		03-May-21	00:00		26-May-21	1478236	✓	✓	Dustfall	Particulates
Metals (Dustfall)																
Aluminum (Al)-Total	L2585978-32	CP1-DUSTFALL-4	MET-DUST(DM2)-MS-VA	0.00935	0.000041	mg/dm2.day		03-May-21	00:00	20-May-21	25-May-21	1475039	✓	✓	Dustfall	Metals
Antimony (Sb)-Total	L2585978-32	CP1-DUSTFALL-4	MET-DUST(DM2)-MS-VA	<0.0000014	0.0000014	mg/dm2.day		03-May-21	00:00	20-May-21	25-May-21	1475039	×	✓	Dustfall	Metals
Arsenic (As)-Total	L2585978-32	CP1-DUSTFALL-4	MET-DUST(DM2)-MS-VA	0.0000047	0.0000014	mg/dm2.day		03-May-21	00:00	20-May-21	25-May-21	1475039	✓	✓	Dustfall	Metals
Barium (Ba)-Total	L2585978-32	CP1-DUSTFALL-4	MET-DUST(DM2)-MS-VA	0.0000763	0.00000068	mg/dm2.day		03-May-21	00:00	20-May-21	25-May-21	1475039	×	✓	Dustfall	Metals
Beryllium (Be)-Total	L2585978-32	CP1-DUSTFALL-4	MET-DUST(DM2)-MS-VA	<0.0000068	0.0000068	mg/dm2.day		03-May-21	00:00	20-May-21	25-May-21	1475039	✓	✓	Dustfall	Metals
Bismuth (Bi)-Total	L2585978-32	CP1-DUSTFALL-4	MET-DUST(DM2)-MS-VA	<0.0000068	0.0000068	mg/dm2.day		03-May-21	00:00	20-May-21	25-May-21	1475039	✓	✓	Dustfall	Metals
Boron (B)-Total	L2585978-32	CP1-DUSTFALL-4	MET-DUST(DM2)-MS-VA	<0.00014	0.00014	mg/dm2.day		03-May-21	00:00	20-May-21	25-May-21	1475039	✓	✓	Dustfall	Metals
Cadmium (Cd)-Total	L2585978-32	CP1-DUSTFALL-4	MET-DUST(DM2)-MS-VA	0.00000109	0.00000068	mg/dm2.day		03-May-21	00:00	20-May-21	25-May-21	1475039	✓	✓	Dustfall	Metals
Calcium (Ca)-Total	L2585978-32	CP1-DUSTFALL-4	MET-DUST(DM2)-MS-VA	0.110	0.00027	mg/dm2.day		03-May-21	00:00	20-May-21	25-May-21	1475039	✓	✓	Dustfall	Metals
Chromium (Cr)-Total	L2585978-32	CP1-DUSTFALL-4	MET-DUST(DM2)-MS-VA	0.0000163	0.0000068	mg/dm2.day		03-May-21	00:00	20-May-21	25-May-21	1475039	✓	✓	Dustfall	Metals
Cobalt (Co)-Total	L2585978-32	CP1-DUSTFALL-4	MET-DUST(DM2)-MS-VA	0.0000043	0.0000014	mg/dm2.day		03-May-21	00:00	20-May-21	25-May-21	1475039	✓	✓	Dustfall	Metals
Copper (Cu)-Total	L2585978-32	CP1-DUSTFALL-4	MET-DUST(DM2)-MS-VA	0.0000658	0.0000068	mg/dm2.day		03-May-21	00:00	20-May-21	25-May-21	1475039	✓	✓	Dustfall	Metals
Iron (Fe)-Total	L2585978-32	CP1-DUSTFALL-4	MET-DUST(DM2)-MS-VA	0.00947	0.00041	mg/dm2.day		03-May-21	00:00	20-May-21	25-May-21	1475039	✓	✓	Dustfall	Metals
Lead (Pb)-Total	L2585978-32	CP1-DUSTFALL-4	MET-DUST(DM2)-MS-VA	0.0000103	0.00000068	mg/dm2.day		03-May-21	00:00	20-May-21	25-May-21	1475039	✓	✓	Dustfall	Metals
Lithium (Li)-Total	L2585978-32	CP1-DUSTFALL-4	MET-DUST(DM2)-MS-VA	<0.000068	0.000068	mg/dm2.day		03-May-21	00:00	20-May-21	25-May-21	1475039	✓	✓	Dustfall	Metals
Magnesium (Mg)-Total	L2585978-32	CP1-DUSTFALL-4	MET-DUST(DM2)-MS-VA	0.0219	0.000068	mg/dm2.day		03-May-21	00:00	20-May-21	25-May-21	1475039	✓	✓	Dustfall	Metals
Manganese (Mn)-Total	L2585978-32	CP1-DUSTFALL-4	MET-DUST(DM2)-MS-VA	0.000363	0.0000014	mg/dm2.day		03-May-21	00:00	20-May-21	25-May-21	1475039	✓	✓	Dustfall	Metals
Molybdenum (Mo)-Total	L2585978-32	CP1-DUSTFALL-4	MET-DUST(DM2)-MS-VA	0.00000574	0.00000068	mg/dm2.day		03-May-21	00:00	20-May-21	25-May-21	1475039	✓	✓	Dustfall	Metals
Nickel (Ni)-Total	L2585978-32	CP1-DUSTFALL-4	MET-DUST(DM2)-MS-VA	0.0000123	0.0000068	mg/dm2.day		03-May-21	00:00	20-May-21	25-May-21	1475039	✓	✓	Dustfall	Metals
Phosphorus (P)-Total	L2585978-32	CP1-DUSTFALL-4	MET-DUST(DM2)-MS-VA	0.0792	0.00068	mg/dm2.day		03-May-21	00:00	20-May-21	25-May-21	1475039	×	✓	Dustfall	Metals
Potassium (K)-Total	L2585978-32	CP1-DUSTFALL-4	MET-DUST(DM2)-MS-VA	0.0495	0.00068	mg/dm2.day		03-May-21	00:00	20-May-21	25-May-21	1475039	✓	✓	Dustfall	Metals
Selenium (Se)-Total	L2585978-32	CP1-DUSTFALL-4	MET-DUST(DM2)-MS-VA	<0.000014	0.000014	mg/dm2.day		03-May-21	00:00	20-May-21	25-May-21	1475039	✓	✓	Dustfall	Metals
Silicon (Si)-Total	L2585978-32	CP1-DUSTFALL-4	MET-DUST(DM2)-MS-VA	0.0186	0.00068	mg/dm2.day		03-May-21	00:00	20-May-21	25-May-21	1475039	✓	✓	Dustfall	Metals
Silver (Ag)-Total	L2585978-32	CP1-DUSTFALL-4	MET-DUST(DM2)-MS-VA	0.00000055	0.00000014	mg/dm2.day		03-May-21	00:00	20-May-21	25-May-21	1475039	✓	✓	Dustfall	Metals
Sodium (Na)-Total	L2585978-32	CP1-DUSTFALL-4	MET-DUST(DM2)-MS-VA	0.0321	0.00068	mg/dm2.day		03-May-21	00:00	20-May-21	25-May-21	1475039	✓	✓	Dustfall	Metals
Strontium (Sr)-Total	L2585978-32	CP1-DUSTFALL-4	MET-DUST(DM2)-MS-VA	0.0000865	0.0000014	mg/dm2.day		03-May-21	00:00	20-May-21	25-May-21	1475039	✓	✓	Dustfall	Metals
Thallium (Tl)-Total	L2585978-32	CP1-DUSTFALL-4	MET-DUST(DM2)-MS-VA	<0.0000014	0.0000014	mg/dm2.day		03-May-21	00:00	20-May-21	25-May-21	1475039	✓	✓	Dustfall	Metals
Tin (Sn)-Total	L2585978-32	CP1-DUSTFALL-4	MET-DUST(DM2)-MS-VA	<0.0000014	0.0000014	mg/dm2.day		03-May-21	00:00	20-May-21	25-May-21	1475039	×	✓	Dustfall	Metals
Titanium (Ti)-Total	L2585978-32	CP1-DUSTFALL-4	MET-DUST(DM2)-MS-VA	0.00022	0.00014	mg/dm2.day		03-May-21	00:00	20-May-21	25-May-21	1475039	✓	✓	Dustfall	Metals
Uranium (U)-Total	L2585978-32	CP1-DUSTFALL-4	MET-DUST(DM2)-MS-VA	0.00000065	0.00000014	mg/dm2.day		03-May-21	00:00	20-May-21	25-May-21	1475039	✓	✓	Dustfall	Metals
Vanadium (V)-Total	L2585978-32	CP1-DUSTFALL-4	MET-DUST(DM2)-MS-VA	0.000021	0.000014	mg/dm2.day		03-May-21	00:00	20-May-21	25-May-21	1475039	✓	✓	Dustfall	Metals
Zinc (Zn)-Total	L2585978-32	CP1-DUSTFALL-4	MET-DUST(DM2)-MS-VA	0.000354	0.000041	mg/dm2.day		03-May-21	00:00	20-May-21	25-May-21	1475039	✓	✓	Dustfall	Metals
Particulates (Dustfall)																
Fixed Dustfall	L2585978-33	WCP1-DUSTFALL-4	DUSTFALLS-ALL-DM2-VA	1.83	0.10	mg/dm2.day		03-May-21	00:00		26-May-21	1478236	✓	✓	Dustfall	Particulates
Volatile Dustfall	L2585978-33	WCP1-DUSTFALL-4	DUSTFALLS-ALL-DM2-VA	2.65	0.10	mg/dm2.day		03-May-21	00:00		26-May-21	1478236	✓	✓	Dustfall	Particulates
Total Dustfall	L2585978-33	WCP1-DUSTFALL-4	DUSTFALLS-ALL-DM2-VA	4.48	0.10	mg/dm2.day		03-May-21	00:00		26-May-21	1478236	✓	✓	Dustfall	Particulates
Fixed Insoluble Dustfall	L2585978-33	WCP1-DUSTFALL-4	DUSTFALLS-ALL-DM2-VA	0.50	0.10	mg/dm2.day		03-May-21	00:00		26-May-21	1478236	✓	✓	Dustfall	Particulates
Volatile Insoluble Dustfall	L2585978-33	WCP1-DUSTFALL-4	DUSTFALLS-ALL-DM2-VA	1.56	0.10	mg/dm2.day		03-May-21	00:00		26-May-21	1478236	✓	✓	Dustfall	Particulates
Total Insoluble Dustfall	L2585978-33	WCP1-DUSTFALL-4	DUSTFALLS-ALL-DM2-VA	2.06	0.10	mg/dm2.day		03-May-21	00:00		26-May-21	1478236	✓	✓	Dustfall	Particulates
Fixed Soluble Dustfall	L2585978-33	WCP1-DUSTFALL-4	DUSTFALLS-ALL-DM2-VA	1.33	0.10	mg/dm2.day		03-May-21	00:00		26-May-21	1478236	✓	✓	Dustfall	Particulates
Volatile Soluble Dustfall	L2585978-33	WCP1-DUSTFALL-4	DUSTFALLS-ALL-DM2-VA	1.09	0.10	mg/dm2.day		03-May-21	00:00		26-May-21	1478236	✓	✓	Dustfall	Particulates
Total Soluble Dustfall	L2585978-33	WCP1-DUSTFALL-4	DUSTFALLS-ALL-DM2-VA	2.42	0.10	mg/dm2.day		03-May-21	00:00		26-May-21	1478236	✓	✓	Dustfall	Particulates
Metals (Dustfall)																
Aluminum (Al)-Total	L2585978-33	WCP1-DUSTFALL-4	MET-DUST(DM2)-MS-VA	0.0344	0.000061	mg/dm2.day		03-May-21	00:00	20-May-21	25-May-21	1475039	✓	✓	Dustfall	Metals
Antimony (Sb)-Total	L2585978-33	WCP1-DUSTFALL-4	MET-DUST(DM2)-MS-VA	<0.0000061	0.0000061	mg/dm2.day	DLB	03-May-21	00:00	20-May-21	25-May-21	1475039	×	✓	Dustfall	Metals
Arsenic (As)-Total	L2585978-33	WCP1-DUSTFALL-4	MET-DUST(DM2)-MS-VA	0.0000629	0.0000020	mg/dm2.day		03-May-21	00:00	20-May-21	25-May-21	1475039	✓	✓	Dustfall	Metals
Barium (Ba)-Total	L2585978-33	WCP1-DUSTFALL-4	MET-DUST(DM2)-MS-VA	0.000459	0.0000010	mg/dm2.day		03-May-21	00:00	20-May-21	25-May-21	1475039	×	✓	Dustfall	Metals
Beryllium (Be)-Total	L2585978-33	WCP1-DUSTFALL-4	MET-DUST(DM2)-MS-VA	<0.000010	0.000010	mg/dm2.day		03-May-21	00:00	20-May-21	25-May-21	1475039	✓	✓	Dustfall	Metals

Results of Analysis L2585978

Job Reference NEW GOLD RRP
Report To Sarah Flesher, New Gold Inc. Rainy River Project
Date Received 10-May-2021 8:30
Report Date 4-Jun-2021 17:27
Report Version 1

Parameter	ALS ID	Client Sample ID	ALS Test Code	Results	Detection Limit	Units	Qual	Date Sampled	Time Sampled	Prep Date	Analysis Date	QC Lot	QC Eval	Hold Time Eval	Matrix	Class
Bismuth (Bi)-Total	L2585978-33	WCP1-DUSTFALL-4	MET-DUST(DM2)-MS-VA	<0.000010	0.000010	mg/dm2.day		03-May-21	00:00	20-May-21	25-May-21	1475039	✓	✓	Dustfall	Metals
Boron (B)-Total	L2585978-33	WCP1-DUSTFALL-4	MET-DUST(DM2)-MS-VA	<0.00020	0.00020	mg/dm2.day		03-May-21	00:00	20-May-21	25-May-21	1475039	✓	✓	Dustfall	Metals
Cadmium (Cd)-Total	L2585978-33	WCP1-DUSTFALL-4	MET-DUST(DM2)-MS-VA	0.0000267	0.0000010	mg/dm2.day		03-May-21	00:00	20-May-21	25-May-21	1475039	✓	✓	Dustfall	Metals
Calcium (Ca)-Total	L2585978-33	WCP1-DUSTFALL-4	MET-DUST(DM2)-MS-VA	0.436	0.00040	mg/dm2.day		03-May-21	00:00	20-May-21	25-May-21	1475039	✓	✓	Dustfall	Metals
Chromium (Cr)-Total	L2585978-33	WCP1-DUSTFALL-4	MET-DUST(DM2)-MS-VA	0.000078	0.000010	mg/dm2.day		03-May-21	00:00	20-May-21	25-May-21	1475039	✓	✓	Dustfall	Metals
Cobalt (Co)-Total	L2585978-33	WCP1-DUSTFALL-4	MET-DUST(DM2)-MS-VA	0.0000336	0.0000020	mg/dm2.day		03-May-21	00:00	20-May-21	25-May-21	1475039	✓	✓	Dustfall	Metals
Copper (Cu)-Total	L2585978-33	WCP1-DUSTFALL-4	MET-DUST(DM2)-MS-VA	0.00212	0.000010	mg/dm2.day		03-May-21	00:00	20-May-21	25-May-21	1475039	✓	✓	Dustfall	Metals
Iron (Fe)-Total	L2585978-33	WCP1-DUSTFALL-4	MET-DUST(DM2)-MS-VA	0.0483	0.00061	mg/dm2.day		03-May-21	00:00	20-May-21	25-May-21	1475039	✓	✓	Dustfall	Metals
Lead (Pb)-Total	L2585978-33	WCP1-DUSTFALL-4	MET-DUST(DM2)-MS-VA	0.000116	0.0000010	mg/dm2.day		03-May-21	00:00	20-May-21	25-May-21	1475039	✓	✓	Dustfall	Metals
Lithium (Li)-Total	L2585978-33	WCP1-DUSTFALL-4	MET-DUST(DM2)-MS-VA	<0.00010	0.00010	mg/dm2.day		03-May-21	00:00	20-May-21	25-May-21	1475039	✓	✓	Dustfall	Metals
Magnesium (Mg)-Total	L2585978-33	WCP1-DUSTFALL-4	MET-DUST(DM2)-MS-VA	0.0634	0.00010	mg/dm2.day		03-May-21	00:00	20-May-21	25-May-21	1475039	✓	✓	Dustfall	Metals
Manganese (Mn)-Total	L2585978-33	WCP1-DUSTFALL-4	MET-DUST(DM2)-MS-VA	0.00199	0.0000020	mg/dm2.day		03-May-21	00:00	20-May-21	25-May-21	1475039	✓	✓	Dustfall	Metals
Molybdenum (Mo)-Total	L2585978-33	WCP1-DUSTFALL-4	MET-DUST(DM2)-MS-VA	0.0000912	0.0000010	mg/dm2.day		03-May-21	00:00	20-May-21	25-May-21	1475039	✓	✓	Dustfall	Metals
Nickel (Ni)-Total	L2585978-33	WCP1-DUSTFALL-4	MET-DUST(DM2)-MS-VA	0.000080	0.000010	mg/dm2.day		03-May-21	00:00	20-May-21	25-May-21	1475039	✓	✓	Dustfall	Metals
Phosphorus (P)-Total	L2585978-33	WCP1-DUSTFALL-4	MET-DUST(DM2)-MS-VA	1.12	0.0010	mg/dm2.day		03-May-21	00:00	20-May-21	25-May-21	1475039	×	✓	Dustfall	Metals
Potassium (K)-Total	L2585978-33	WCP1-DUSTFALL-4	MET-DUST(DM2)-MS-VA	2.08	0.0010	mg/dm2.day		03-May-21	00:00	20-May-21	25-May-21	1475039	✓	✓	Dustfall	Metals
Selenium (Se)-Total	L2585978-33	WCP1-DUSTFALL-4	MET-DUST(DM2)-MS-VA	0.000129	0.000020	mg/dm2.day		03-May-21	00:00	20-May-21	25-May-21	1475039	✓	✓	Dustfall	Metals
Silicon (Si)-Total	L2585978-33	WCP1-DUSTFALL-4	MET-DUST(DM2)-MS-VA	0.0794	0.0010	mg/dm2.day		03-May-21	00:00	20-May-21	25-May-21	1475039	✓	✓	Dustfall	Metals
Silver (Ag)-Total	L2585978-33	WCP1-DUSTFALL-4	MET-DUST(DM2)-MS-VA	0.00000665	0.00000020	mg/dm2.day		03-May-21	00:00	20-May-21	25-May-21	1475039	✓	✓	Dustfall	Metals
Sodium (Na)-Total	L2585978-33	WCP1-DUSTFALL-4	MET-DUST(DM2)-MS-VA	0.489	0.0010	mg/dm2.day		03-May-21	00:00	20-May-21	25-May-21	1475039	✓	✓	Dustfall	Metals
Strontium (Sr)-Total	L2585978-33	WCP1-DUSTFALL-4	MET-DUST(DM2)-MS-VA	0.000320	0.0000020	mg/dm2.day		03-May-21	00:00	20-May-21	25-May-21	1475039	✓	✓	Dustfall	Metals
Thallium (Tl)-Total	L2585978-33	WCP1-DUSTFALL-4	MET-DUST(DM2)-MS-VA	<0.0000020	0.0000020	mg/dm2.day		03-May-21	00:00	20-May-21	25-May-21	1475039	✓	✓	Dustfall	Metals
Tin (Sn)-Total	L2585978-33	WCP1-DUSTFALL-4	MET-DUST(DM2)-MS-VA	<0.0000040	0.0000040	mg/dm2.day	DLB	03-May-21	00:00	20-May-21	25-May-21	1475039	×	✓	Dustfall	Metals
Titanium (Ti)-Total	L2585978-33	WCP1-DUSTFALL-4	MET-DUST(DM2)-MS-VA	0.00073	0.00020	mg/dm2.day		03-May-21	00:00	20-May-21	25-May-21	1475039	✓	✓	Dustfall	Metals
Uranium (U)-Total	L2585978-33	WCP1-DUSTFALL-4	MET-DUST(DM2)-MS-VA	0.00000205	0.00000020	mg/dm2.day		03-May-21	00:00	20-May-21	25-May-21	1475039	✓	✓	Dustfall	Metals
Vanadium (V)-Total	L2585978-33	WCP1-DUSTFALL-4	MET-DUST(DM2)-MS-VA	0.000082	0.000020	mg/dm2.day		03-May-21	00:00	20-May-21	25-May-21	1475039	✓	✓	Dustfall	Metals
Zinc (Zn)-Total	L2585978-33	WCP1-DUSTFALL-4	MET-DUST(DM2)-MS-VA	0.00660	0.000061	mg/dm2.day		03-May-21	00:00	20-May-21	25-May-21	1475039	✓	✓	Dustfall	Metals
Particulates (Dustfall)																
Fixed Dustfall	L2585978-34	GH1-DUSTFALL-4	DUSTFALLS-ALL-DM2-VA	0.83	0.10	mg/dm2.day		03-May-21	00:00		26-May-21	1478236	✓	✓	Dustfall	Particulates
Volatile Dustfall	L2585978-34	GH1-DUSTFALL-4	DUSTFALLS-ALL-DM2-VA	0.70	0.10	mg/dm2.day		03-May-21	00:00		26-May-21	1478236	✓	✓	Dustfall	Particulates
Total Dustfall	L2585978-34	GH1-DUSTFALL-4	DUSTFALLS-ALL-DM2-VA	1.52	0.10	mg/dm2.day		03-May-21	00:00		26-May-21	1478236	✓	✓	Dustfall	Particulates
Fixed Insoluble Dustfall	L2585978-34	GH1-DUSTFALL-4	DUSTFALLS-ALL-DM2-VA	0.33	0.10	mg/dm2.day		03-May-21	00:00		26-May-21	1478236	✓	✓	Dustfall	Particulates
Volatile Insoluble Dustfall	L2585978-34	GH1-DUSTFALL-4	DUSTFALLS-ALL-DM2-VA	0.33	0.10	mg/dm2.day		03-May-21	00:00		26-May-21	1478236	✓	✓	Dustfall	Particulates
Total Insoluble Dustfall	L2585978-34	GH1-DUSTFALL-4	DUSTFALLS-ALL-DM2-VA	0.67	0.10	mg/dm2.day		03-May-21	00:00		26-May-21	1478236	✓	✓	Dustfall	Particulates
Fixed Soluble Dustfall	L2585978-34	GH1-DUSTFALL-4	DUSTFALLS-ALL-DM2-VA	0.49	0.10	mg/dm2.day		03-May-21	00:00		26-May-21	1478236	✓	✓	Dustfall	Particulates
Volatile Soluble Dustfall	L2585978-34	GH1-DUSTFALL-4	DUSTFALLS-ALL-DM2-VA	0.36	0.10	mg/dm2.day		03-May-21	00:00		26-May-21	1478236	✓	✓	Dustfall	Particulates
Total Soluble Dustfall	L2585978-34	GH1-DUSTFALL-4	DUSTFALLS-ALL-DM2-VA	0.85	0.10	mg/dm2.day		03-May-21	00:00		26-May-21	1478236	✓	✓	Dustfall	Particulates
Metals (Dustfall)																
Aluminum (Al)-Total	L2585978-34	GH1-DUSTFALL-4	MET-DUST(DM2)-MS-VA	0.00461	0.000043	mg/dm2.day		03-May-21	00:00	20-May-21	25-May-21	1475039	✓	✓	Dustfall	Metals
Antimony (Sb)-Total	L2585978-34	GH1-DUSTFALL-4	MET-DUST(DM2)-MS-VA	<0.0000028	0.0000028	mg/dm2.day	DLB	03-May-21	00:00	20-May-21	25-May-21	1475039	×	✓	Dustfall	Metals
Arsenic (As)-Total	L2585978-34	GH1-DUSTFALL-4	MET-DUST(DM2)-MS-VA	0.0000061	0.0000014	mg/dm2.day		03-May-21	00:00	20-May-21	25-May-21	1475039	✓	✓	Dustfall	Metals
Barium (Ba)-Total	L2585978-34	GH1-DUSTFALL-4	MET-DUST(DM2)-MS-VA	0.0000589	0.00000071	mg/dm2.day		03-May-21	00:00	20-May-21	25-May-21	1475039	×	✓	Dustfall	Metals
Beryllium (Be)-Total	L2585978-34	GH1-DUSTFALL-4	MET-DUST(DM2)-MS-VA	<0.0000071	0.0000071	mg/dm2.day		03-May-21	00:00	20-May-21	25-May-21	1475039	✓	✓	Dustfall	Metals
Bismuth (Bi)-Total	L2585978-34	GH1-DUSTFALL-4	MET-DUST(DM2)-MS-VA	<0.0000071	0.0000071	mg/dm2.day		03-May-21	00:00	20-May-21	25-May-21	1475039	✓	✓	Dustfall	Metals
Boron (B)-Total	L2585978-34	GH1-DUSTFALL-4	MET-DUST(DM2)-MS-VA	<0.00014	0.00014	mg/dm2.day		03-May-21	00:00	20-May-21	25-May-21	1475039	✓	✓	Dustfall	Metals
Cadmium (Cd)-Total	L2585978-34	GH1-DUSTFALL-4	MET-DUST(DM2)-MS-VA	0.00000136	0.00000071	mg/dm2.day		03-May-21	00:00	20-May-21	25-May-21	1475039	✓	✓	Dustfall	Metals
Calcium (Ca)-Total	L2585978-34	GH1-DUSTFALL-4	MET-DUST(DM2)-MS-VA	0.0623	0.00028	mg/dm2.day		03-May-21	00:00	20-May-21	25-May-21	1475039	✓	✓	Dustfall	Metals
Chromium (Cr)-Total	L2585978-34	GH1-DUSTFALL-4	MET-DUST(DM2)-MS-VA	0.0000094	0.0000071	mg/dm2.day		03-May-21	00:00	20-May-21	25-May-21	1475039	✓	✓	Dustfall	Metals
Cobalt (Co)-Total	L2585978-34	GH1-DUSTFALL-4	MET-DUST(DM2)-MS-VA	0.0000084	0.0000014	mg/dm2.day		03-May-21	00:00	20-May-21	25-May-21	1475039	✓	✓	Dustfall	Metals
Copper (Cu)-Total	L2585978-34	GH1-DUSTFALL-4	MET-DUST(DM2)-MS-VA	0.000109	0.0000071	mg/dm2.day		03-May-21	00:00	20-May-21	25-May-21	1475039	✓	✓	Dustfall	Metals
Iron (Fe)-Total	L2585978-34	GH1-DUSTFALL-4	MET-DUST(DM2)-MS-VA	0.00571	0.00043	mg/dm2.day		03-May-21	00:00	20-May-21	25-May-21	1475039	✓	✓	Dustfall	Metals
Lead (Pb)-Total	L2585978-34	GH1-DUSTFALL-4	MET-DUST(DM2)-MS-VA	0.00000441	0.00000071	mg/dm2.day		03-May-21	00:00	20-May-21	25-May-21	1475039	✓	✓	Dustfall	Metals
Lithium (Li)-Total	L2585978-34	GH1-DUSTFALL-4	MET-DUST(DM2)-MS-VA	<0.000071	0.000071	mg/dm2.day		03-May-21	00:00	20-May-21	25-May-21	1475039	✓	✓	Dustfall	Metals

Results of Analysis L2585978

Job Reference NEW GOLD RRP
Report To Sarah Flesher, New Gold Inc. Rainy River Project
Date Received 10-May-2021 8:30
Report Date 4-Jun-2021 17:27
Report Version 1

Parameter	ALS ID	Client Sample ID	ALS Test Code	Results	Detection Limit	Units	Qual	Date Sampled	Time Sampled	Prep Date	Analysis Date	QC Lot	QC Eval	Hold Time Eval	Matrix	Class
Magnesium (Mg)-Total	L2585978-34	GH1-DUSTFALL-4	MET-DUST(DM2)-MS-VA	0.0154	0.000071	mg/dm2.day		03-May-21	00:00	20-May-21	25-May-21	1475039	✓	✓	Dustfall	Metals
Manganese (Mn)-Total	L2585978-34	GH1-DUSTFALL-4	MET-DUST(DM2)-MS-VA	0.000361	0.0000014	mg/dm2.day		03-May-21	00:00	20-May-21	25-May-21	1475039	✓	✓	Dustfall	Metals
Molybdenum (Mo)-Total	L2585978-34	GH1-DUSTFALL-4	MET-DUST(DM2)-MS-VA	0.00000456	0.00000071	mg/dm2.day		03-May-21	00:00	20-May-21	25-May-21	1475039	✓	✓	Dustfall	Metals
Nickel (Ni)-Total	L2585978-34	GH1-DUSTFALL-4	MET-DUST(DM2)-MS-VA	0.0000102	0.0000071	mg/dm2.day		03-May-21	00:00	20-May-21	25-May-21	1475039	✓	✓	Dustfall	Metals
Phosphorus (P)-Total	L2585978-34	GH1-DUSTFALL-4	MET-DUST(DM2)-MS-VA	0.0604	0.00071	mg/dm2.day		03-May-21	00:00	20-May-21	25-May-21	1475039	×	✓	Dustfall	Metals
Potassium (K)-Total	L2585978-34	GH1-DUSTFALL-4	MET-DUST(DM2)-MS-VA	0.100	0.00071	mg/dm2.day		03-May-21	00:00	20-May-21	25-May-21	1475039	✓	✓	Dustfall	Metals
Selenium (Se)-Total	L2585978-34	GH1-DUSTFALL-4	MET-DUST(DM2)-MS-VA	<0.000014	0.000014	mg/dm2.day		03-May-21	00:00	20-May-21	25-May-21	1475039	✓	✓	Dustfall	Metals
Silicon (Si)-Total	L2585978-34	GH1-DUSTFALL-4	MET-DUST(DM2)-MS-VA	0.00787	0.00071	mg/dm2.day		03-May-21	00:00	20-May-21	25-May-21	1475039	✓	✓	Dustfall	Metals
Silver (Ag)-Total	L2585978-34	GH1-DUSTFALL-4	MET-DUST(DM2)-MS-VA	0.00000020	0.00000014	mg/dm2.day		03-May-21	00:00	20-May-21	25-May-21	1475039	✓	✓	Dustfall	Metals
Sodium (Na)-Total	L2585978-34	GH1-DUSTFALL-4	MET-DUST(DM2)-MS-VA	0.0222	0.00071	mg/dm2.day		03-May-21	00:00	20-May-21	25-May-21	1475039	✓	✓	Dustfall	Metals
Strontium (Sr)-Total	L2585978-34	GH1-DUSTFALL-4	MET-DUST(DM2)-MS-VA	0.000137	0.0000014	mg/dm2.day		03-May-21	00:00	20-May-21	25-May-21	1475039	✓	✓	Dustfall	Metals
Thallium (Tl)-Total	L2585978-34	GH1-DUSTFALL-4	MET-DUST(DM2)-MS-VA	<0.0000014	0.0000014	mg/dm2.day		03-May-21	00:00	20-May-21	25-May-21	1475039	✓	✓	Dustfall	Metals
Tin (Sn)-Total	L2585978-34	GH1-DUSTFALL-4	MET-DUST(DM2)-MS-VA	<0.0000014	0.0000014	mg/dm2.day		03-May-21	00:00	20-May-21	25-May-21	1475039	×	✓	Dustfall	Metals
Titanium (Ti)-Total	L2585978-34	GH1-DUSTFALL-4	MET-DUST(DM2)-MS-VA	<0.00014	0.00014	mg/dm2.day		03-May-21	00:00	20-May-21	25-May-21	1475039	✓	✓	Dustfall	Metals
Uranium (U)-Total	L2585978-34	GH1-DUSTFALL-4	MET-DUST(DM2)-MS-VA	0.00000044	0.00000014	mg/dm2.day		03-May-21	00:00	20-May-21	25-May-21	1475039	✓	✓	Dustfall	Metals
Vanadium (V)-Total	L2585978-34	GH1-DUSTFALL-4	MET-DUST(DM2)-MS-VA	<0.000014	0.000014	mg/dm2.day		03-May-21	00:00	20-May-21	25-May-21	1475039	✓	✓	Dustfall	Metals
Zinc (Zn)-Total	L2585978-34	GH1-DUSTFALL-4	MET-DUST(DM2)-MS-VA	0.000356	0.000043	mg/dm2.day		03-May-21	00:00	20-May-21	25-May-21	1475039	✓	✓	Dustfall	Metals
Particulates (Dustfall)																
Fixed Dustfall	L2585978-35	SPP1-DUSTFALL-17	DUSTFALLS-ALL-DM2-VA	1.10	0.43	mg/dm2.day		07-Apr-21	00:00		26-May-21	1478236	✓	✓	Dustfall	Particulates
Volatile Dustfall	L2585978-35	SPP1-DUSTFALL-17	DUSTFALLS-ALL-DM2-VA	<0.43	0.43	mg/dm2.day		07-Apr-21	00:00		26-May-21	1478236	✓	✓	Dustfall	Particulates
Total Dustfall	L2585978-35	SPP1-DUSTFALL-17	DUSTFALLS-ALL-DM2-VA	1.62	0.43	mg/dm2.day		07-Apr-21	00:00		26-May-21	1478236	✓	✓	Dustfall	Particulates
Fixed Insoluble Dustfall	L2585978-35	SPP1-DUSTFALL-17	DUSTFALLS-ALL-DM2-VA	1.06	0.43	mg/dm2.day		07-Apr-21	00:00		26-May-21	1478236	✓	✓	Dustfall	Particulates
Volatile Insoluble Dustfall	L2585978-35	SPP1-DUSTFALL-17	DUSTFALLS-ALL-DM2-VA	<0.43	0.43	mg/dm2.day		07-Apr-21	00:00		26-May-21	1478236	✓	✓	Dustfall	Particulates
Total Insoluble Dustfall	L2585978-35	SPP1-DUSTFALL-17	DUSTFALLS-ALL-DM2-VA	1.23	0.43	mg/dm2.day		07-Apr-21	00:00		26-May-21	1478236	✓	✓	Dustfall	Particulates
Fixed Soluble Dustfall	L2585978-35	SPP1-DUSTFALL-17	DUSTFALLS-ALL-DM2-VA	<0.43	0.43	mg/dm2.day		07-Apr-21	00:00		26-May-21	1478236	✓	✓	Dustfall	Particulates
Volatile Soluble Dustfall	L2585978-35	SPP1-DUSTFALL-17	DUSTFALLS-ALL-DM2-VA	<0.43	0.43	mg/dm2.day		07-Apr-21	00:00		26-May-21	1478236	✓	✓	Dustfall	Particulates
Total Soluble Dustfall	L2585978-35	SPP1-DUSTFALL-17	DUSTFALLS-ALL-DM2-VA	<0.43	0.43	mg/dm2.day		07-Apr-21	00:00		26-May-21	1478236	✓	✓	Dustfall	Particulates
Metals (Dustfall)																
Aluminum (Al)-Total	L2585978-35	SPP1-DUSTFALL-17	MET-DUST(DM2)-MS-VA	0.00953	0.00019	mg/dm2.day		07-Apr-21	00:00	20-May-21	25-May-21	1475039	✓	✓	Dustfall	Metals
Antimony (Sb)-Total	L2585978-35	SPP1-DUSTFALL-17	MET-DUST(DM2)-MS-VA	<0.0000062	0.0000062	mg/dm2.day		07-Apr-21	00:00	20-May-21	25-May-21	1475039	×	✓	Dustfall	Metals
Arsenic (As)-Total	L2585978-35	SPP1-DUSTFALL-17	MET-DUST(DM2)-MS-VA	0.0000078	0.0000062	mg/dm2.day		07-Apr-21	00:00	20-May-21	25-May-21	1475039	✓	✓	Dustfall	Metals
Barium (Ba)-Total	L2585978-35	SPP1-DUSTFALL-17	MET-DUST(DM2)-MS-VA	0.0000615	0.0000031	mg/dm2.day		07-Apr-21	00:00	20-May-21	25-May-21	1475039	×	✓	Dustfall	Metals
Beryllium (Be)-Total	L2585978-35	SPP1-DUSTFALL-17	MET-DUST(DM2)-MS-VA	<0.000031	0.000031	mg/dm2.day		07-Apr-21	00:00	20-May-21	25-May-21	1475039	✓	✓	Dustfall	Metals
Bismuth (Bi)-Total	L2585978-35	SPP1-DUSTFALL-17	MET-DUST(DM2)-MS-VA	<0.000031	0.000031	mg/dm2.day		07-Apr-21	00:00	20-May-21	25-May-21	1475039	✓	✓	Dustfall	Metals
Boron (B)-Total	L2585978-35	SPP1-DUSTFALL-17	MET-DUST(DM2)-MS-VA	<0.00062	0.00062	mg/dm2.day		07-Apr-21	00:00	20-May-21	25-May-21	1475039	✓	✓	Dustfall	Metals
Cadmium (Cd)-Total	L2585978-35	SPP1-DUSTFALL-17	MET-DUST(DM2)-MS-VA	<0.0000031	0.0000031	mg/dm2.day		07-Apr-21	00:00	20-May-21	25-May-21	1475039	✓	✓	Dustfall	Metals
Calcium (Ca)-Total	L2585978-35	SPP1-DUSTFALL-17	MET-DUST(DM2)-MS-VA	0.0368	0.0012	mg/dm2.day		07-Apr-21	00:00	20-May-21	25-May-21	1475039	✓	✓	Dustfall	Metals
Chromium (Cr)-Total	L2585978-35	SPP1-DUSTFALL-17	MET-DUST(DM2)-MS-VA	<0.000031	0.000031	mg/dm2.day		07-Apr-21	00:00	20-May-21	25-May-21	1475039	✓	✓	Dustfall	Metals
Cobalt (Co)-Total	L2585978-35	SPP1-DUSTFALL-17	MET-DUST(DM2)-MS-VA	<0.0000062	0.0000062	mg/dm2.day		07-Apr-21	00:00	20-May-21	25-May-21	1475039	✓	✓	Dustfall	Metals
Copper (Cu)-Total	L2585978-35	SPP1-DUSTFALL-17	MET-DUST(DM2)-MS-VA	0.000089	0.000031	mg/dm2.day		07-Apr-21	00:00	20-May-21	25-May-21	1475039	✓	✓	Dustfall	Metals
Iron (Fe)-Total	L2585978-35	SPP1-DUSTFALL-17	MET-DUST(DM2)-MS-VA	0.0076	0.0019	mg/dm2.day		07-Apr-21	00:00	20-May-21	25-May-21	1475039	✓	✓	Dustfall	Metals
Lead (Pb)-Total	L2585978-35	SPP1-DUSTFALL-17	MET-DUST(DM2)-MS-VA	0.0000259	0.0000031	mg/dm2.day		07-Apr-21	00:00	20-May-21	25-May-21	1475039	✓	✓	Dustfall	Metals
Lithium (Li)-Total	L2585978-35	SPP1-DUSTFALL-17	MET-DUST(DM2)-MS-VA	<0.00031	0.00031	mg/dm2.day		07-Apr-21	00:00	20-May-21	25-May-21	1475039	✓	✓	Dustfall	Metals
Magnesium (Mg)-Total	L2585978-35	SPP1-DUSTFALL-17	MET-DUST(DM2)-MS-VA	0.00588	0.00031	mg/dm2.day		07-Apr-21	00:00	20-May-21	25-May-21	1475039	✓	✓	Dustfall	Metals
Manganese (Mn)-Total	L2585978-35	SPP1-DUSTFALL-17	MET-DUST(DM2)-MS-VA	0.000345	0.0000062	mg/dm2.day		07-Apr-21	00:00	20-May-21	25-May-21	1475039	✓	✓	Dustfall	Metals
Molybdenum (Mo)-Total	L2585978-35	SPP1-DUSTFALL-17	MET-DUST(DM2)-MS-VA	<0.0000031	0.0000031	mg/dm2.day		07-Apr-21	00:00	20-May-21	25-May-21	1475039	✓	✓	Dustfall	Metals
Nickel (Ni)-Total	L2585978-35	SPP1-DUSTFALL-17	MET-DUST(DM2)-MS-VA	<0.000031	0.000031	mg/dm2.day		07-Apr-21	00:00	20-May-21	25-May-21	1475039	✓	✓	Dustfall	Metals
Phosphorus (P)-Total	L2585978-35	SPP1-DUSTFALL-17	MET-DUST(DM2)-MS-VA	<0.0031	0.0031	mg/dm2.day		07-Apr-21	00:00	20-May-21	25-May-21	1475039	×	✓	Dustfall	Metals
Potassium (K)-Total	L2585978-35	SPP1-DUSTFALL-17	MET-DUST(DM2)-MS-VA	0.0038	0.0031	mg/dm2.day		07-Apr-21	00:00	20-May-21	25-May-21	1475039	✓	✓	Dustfall	Metals
Selenium (Se)-Total	L2585978-35	SPP1-DUSTFALL-17	MET-DUST(DM2)-MS-VA	<0.000062	0.000062	mg/dm2.day		07-Apr-21	00:00	20-May-21	25-May-21	1475039	✓	✓	Dustfall	Metals
Silicon (Si)-Total	L2585978-35	SPP1-DUSTFALL-17	MET-DUST(DM2)-MS-VA	0.0136	0.0031	mg/dm2.day		07-Apr-21	00:00	20-May-21	25-May-21	1475039	✓	✓	Dustfall	Metals
Silver (Ag)-Total	L2585978-35	SPP1-DUSTFALL-17	MET-DUST(DM2)-MS-VA	<0.00000062	0.00000062	mg/dm2.day		07-Apr-21	00:00	20-May-21	25-May-21	1475039	✓	✓	Dustfall	Metals
Sodium (Na)-Total	L2585978-35	SPP1-DUSTFALL-17	MET-DUST(DM2)-MS-VA	0.0037	0.0031	mg/dm2.day		07-Apr-21	00:00	20-May-21	25-May-21	1475039	✓	✓	Dustfall	Metals

Results of Analysis L2585978

Job Reference NEW GOLD RRP
Report To Sarah Flesher, New Gold Inc. Rainy River Project
Date Received 10-May-2021 8:30
Report Date 4-Jun-2021 17:27
Report Version 1

Parameter	ALS ID	Client Sample ID	ALS Test Code	Results	Detection Limit	Units	Qual	Date Sampled	Time Sampled	Prep Date	Analysis Date	QC Lot	QC Eval	Hold Time Eval	Matrix	Class
Strontium (Sr)-Total	L2585978-35	SPP1-DUSTFALL-17	MET-DUST(DM2)-MS-VA	0.000117	0.0000062	mg/dm2.day		07-Apr-21	00:00	20-May-21	25-May-21	1475039	✓	✓	Dustfall	Metals
Thallium (Tl)-Total	L2585978-35	SPP1-DUSTFALL-17	MET-DUST(DM2)-MS-VA	<0.0000062	0.0000062	mg/dm2.day		07-Apr-21	00:00	20-May-21	25-May-21	1475039	✓	✓	Dustfall	Metals
Tin (Sn)-Total	L2585978-35	SPP1-DUSTFALL-17	MET-DUST(DM2)-MS-VA	<0.0000062	0.0000062	mg/dm2.day		07-Apr-21	00:00	20-May-21	25-May-21	1475039	×	✓	Dustfall	Metals
Titanium (Ti)-Total	L2585978-35	SPP1-DUSTFALL-17	MET-DUST(DM2)-MS-VA	<0.00062	0.00062	mg/dm2.day		07-Apr-21	00:00	20-May-21	25-May-21	1475039	✓	✓	Dustfall	Metals
Uranium (U)-Total	L2585978-35	SPP1-DUSTFALL-17	MET-DUST(DM2)-MS-VA	<0.00000062	0.00000062	mg/dm2.day		07-Apr-21	00:00	20-May-21	25-May-21	1475039	✓	✓	Dustfall	Metals
Vanadium (V)-Total	L2585978-35	SPP1-DUSTFALL-17	MET-DUST(DM2)-MS-VA	<0.000062	0.000062	mg/dm2.day		07-Apr-21	00:00	20-May-21	25-May-21	1475039	✓	✓	Dustfall	Metals
Zinc (Zn)-Total	L2585978-35	SPP1-DUSTFALL-17	MET-DUST(DM2)-MS-VA	0.00060	0.00019	mg/dm2.day		07-Apr-21	00:00	20-May-21	25-May-21	1475039	✓	✓	Dustfall	Metals
Particulates (Dustfall)																
Fixed Dustfall	L2585978-36	SPP1-DUSTFALL-18	DUSTFALLS-ALL-DM2-VA	<0.43	0.43	mg/dm2.day		14-Apr-21	00:00		26-May-21	1478236	✓	✓	Dustfall	Particulates
Volatile Dustfall	L2585978-36	SPP1-DUSTFALL-18	DUSTFALLS-ALL-DM2-VA	3.30	0.43	mg/dm2.day		14-Apr-21	00:00		26-May-21	1478236	✓	✓	Dustfall	Particulates
Total Dustfall	L2585978-36	SPP1-DUSTFALL-18	DUSTFALLS-ALL-DM2-VA	<0.43	0.43	mg/dm2.day		14-Apr-21	00:00		26-May-21	1478236	✓	✓	Dustfall	Particulates
Fixed Insoluble Dustfall	L2585978-36	SPP1-DUSTFALL-18	DUSTFALLS-ALL-DM2-VA	<0.43	0.43	mg/dm2.day		14-Apr-21	00:00		26-May-21	1478236	✓	✓	Dustfall	Particulates
Volatile Insoluble Dustfall	L2585978-36	SPP1-DUSTFALL-18	DUSTFALLS-ALL-DM2-VA	<0.43	0.43	mg/dm2.day		14-Apr-21	00:00		26-May-21	1478236	✓	✓	Dustfall	Particulates
Total Insoluble Dustfall	L2585978-36	SPP1-DUSTFALL-18	DUSTFALLS-ALL-DM2-VA	<0.43	0.43	mg/dm2.day		14-Apr-21	00:00		26-May-21	1478236	✓	✓	Dustfall	Particulates
Fixed Soluble Dustfall	L2585978-36	SPP1-DUSTFALL-18	DUSTFALLS-ALL-DM2-VA	<0.43	0.43	mg/dm2.day		14-Apr-21	00:00		26-May-21	1478236	✓	✓	Dustfall	Particulates
Volatile Soluble Dustfall	L2585978-36	SPP1-DUSTFALL-18	DUSTFALLS-ALL-DM2-VA	3.19	0.43	mg/dm2.day		14-Apr-21	00:00		26-May-21	1478236	✓	✓	Dustfall	Particulates
Total Soluble Dustfall	L2585978-36	SPP1-DUSTFALL-18	DUSTFALLS-ALL-DM2-VA	<0.43	0.43	mg/dm2.day		14-Apr-21	00:00		26-May-21	1478236	✓	✓	Dustfall	Particulates
Metals (Dustfall)																
Aluminum (Al)-Total	L2585978-36	SPP1-DUSTFALL-18	MET-DUST(DM2)-MS-VA	0.00107	0.00057	mg/dm2.day		14-Apr-21	00:00	21-May-21	25-May-21	1475552	✓	✓	Dustfall	Metals
Antimony (Sb)-Total	L2585978-36	SPP1-DUSTFALL-18	MET-DUST(DM2)-MS-VA	0.000040	0.000019	mg/dm2.day		14-Apr-21	00:00	21-May-21	25-May-21	1475552	✓	✓	Dustfall	Metals
Arsenic (As)-Total	L2585978-36	SPP1-DUSTFALL-18	MET-DUST(DM2)-MS-VA	<0.000019	0.000019	mg/dm2.day		14-Apr-21	00:00	21-May-21	25-May-21	1475552	✓	✓	Dustfall	Metals
Barium (Ba)-Total	L2585978-36	SPP1-DUSTFALL-18	MET-DUST(DM2)-MS-VA	0.0000822	0.0000095	mg/dm2.day		14-Apr-21	00:00	21-May-21	25-May-21	1475552	×	✓	Dustfall	Metals
Beryllium (Be)-Total	L2585978-36	SPP1-DUSTFALL-18	MET-DUST(DM2)-MS-VA	<0.000095	0.000095	mg/dm2.day		14-Apr-21	00:00	21-May-21	25-May-21	1475552	✓	✓	Dustfall	Metals
Bismuth (Bi)-Total	L2585978-36	SPP1-DUSTFALL-18	MET-DUST(DM2)-MS-VA	<0.000095	0.000095	mg/dm2.day		14-Apr-21	00:00	21-May-21	25-May-21	1475552	✓	✓	Dustfall	Metals
Boron (B)-Total	L2585978-36	SPP1-DUSTFALL-18	MET-DUST(DM2)-MS-VA	<0.0019	0.0019	mg/dm2.day		14-Apr-21	00:00	21-May-21	25-May-21	1475552	✓	✓	Dustfall	Metals
Cadmium (Cd)-Total	L2585978-36	SPP1-DUSTFALL-18	MET-DUST(DM2)-MS-VA	<0.0000095	0.0000095	mg/dm2.day		14-Apr-21	00:00	21-May-21	25-May-21	1475552	✓	✓	Dustfall	Metals
Calcium (Ca)-Total	L2585978-36	SPP1-DUSTFALL-18	MET-DUST(DM2)-MS-VA	0.0194	0.0038	mg/dm2.day		14-Apr-21	00:00	21-May-21	25-May-21	1475552	×	✓	Dustfall	Metals
Chromium (Cr)-Total	L2585978-36	SPP1-DUSTFALL-18	MET-DUST(DM2)-MS-VA	<0.000095	0.000095	mg/dm2.day		14-Apr-21	00:00	21-May-21	25-May-21	1475552	✓	✓	Dustfall	Metals
Cobalt (Co)-Total	L2585978-36	SPP1-DUSTFALL-18	MET-DUST(DM2)-MS-VA	<0.000019	0.000019	mg/dm2.day		14-Apr-21	00:00	21-May-21	25-May-21	1475552	✓	✓	Dustfall	Metals
Copper (Cu)-Total	L2585978-36	SPP1-DUSTFALL-18	MET-DUST(DM2)-MS-VA	<0.000095	0.000095	mg/dm2.day		14-Apr-21	00:00	21-May-21	25-May-21	1475552	×	✓	Dustfall	Metals
Iron (Fe)-Total	L2585978-36	SPP1-DUSTFALL-18	MET-DUST(DM2)-MS-VA	<0.0057	0.0057	mg/dm2.day		14-Apr-21	00:00	21-May-21	25-May-21	1475552	✓	✓	Dustfall	Metals
Lead (Pb)-Total	L2585978-36	SPP1-DUSTFALL-18	MET-DUST(DM2)-MS-VA	<0.0000095	0.0000095	mg/dm2.day		14-Apr-21	00:00	21-May-21	25-May-21	1475552	×	✓	Dustfall	Metals
Lithium (Li)-Total	L2585978-36	SPP1-DUSTFALL-18	MET-DUST(DM2)-MS-VA	<0.00095	0.00095	mg/dm2.day		14-Apr-21	00:00	21-May-21	25-May-21	1475552	✓	✓	Dustfall	Metals
Magnesium (Mg)-Total	L2585978-36	SPP1-DUSTFALL-18	MET-DUST(DM2)-MS-VA	0.00370	0.00095	mg/dm2.day		14-Apr-21	00:00	21-May-21	25-May-21	1475552	✓	✓	Dustfall	Metals
Manganese (Mn)-Total	L2585978-36	SPP1-DUSTFALL-18	MET-DUST(DM2)-MS-VA	0.000258	0.000019	mg/dm2.day		14-Apr-21	00:00	21-May-21	25-May-21	1475552	✓	✓	Dustfall	Metals
Molybdenum (Mo)-Total	L2585978-36	SPP1-DUSTFALL-18	MET-DUST(DM2)-MS-VA	<0.0000095	0.0000095	mg/dm2.day		14-Apr-21	00:00	21-May-21	25-May-21	1475552	×	✓	Dustfall	Metals
Nickel (Ni)-Total	L2585978-36	SPP1-DUSTFALL-18	MET-DUST(DM2)-MS-VA	<0.000095	0.000095	mg/dm2.day		14-Apr-21	00:00	21-May-21	25-May-21	1475552	✓	✓	Dustfall	Metals
Phosphorus (P)-Total	L2585978-36	SPP1-DUSTFALL-18	MET-DUST(DM2)-MS-VA	<0.0095	0.0095	mg/dm2.day		14-Apr-21	00:00	21-May-21	25-May-21	1475552	✓	✓	Dustfall	Metals
Potassium (K)-Total	L2585978-36	SPP1-DUSTFALL-18	MET-DUST(DM2)-MS-VA	<0.0095	0.0095	mg/dm2.day		14-Apr-21	00:00	21-May-21	25-May-21	1475552	✓	✓	Dustfall	Metals
Selenium (Se)-Total	L2585978-36	SPP1-DUSTFALL-18	MET-DUST(DM2)-MS-VA	<0.00019	0.00019	mg/dm2.day		14-Apr-21	00:00	21-May-21	25-May-21	1475552	✓	✓	Dustfall	Metals
Silicon (Si)-Total	L2585978-36	SPP1-DUSTFALL-18	MET-DUST(DM2)-MS-VA	<0.0095	0.0095	mg/dm2.day		14-Apr-21	00:00	21-May-21	25-May-21	1475552	✓	✓	Dustfall	Metals
Silver (Ag)-Total	L2585978-36	SPP1-DUSTFALL-18	MET-DUST(DM2)-MS-VA	<0.0000019	0.0000019	mg/dm2.day		14-Apr-21	00:00	21-May-21	25-May-21	1475552	✓	✓	Dustfall	Metals
Sodium (Na)-Total	L2585978-36	SPP1-DUSTFALL-18	MET-DUST(DM2)-MS-VA	<0.0095	0.0095	mg/dm2.day		14-Apr-21	00:00	21-May-21	25-May-21	1475552	✓	✓	Dustfall	Metals
Strontium (Sr)-Total	L2585978-36	SPP1-DUSTFALL-18	MET-DUST(DM2)-MS-VA	0.000061	0.000019	mg/dm2.day		14-Apr-21	00:00	21-May-21	25-May-21	1475552	✓	✓	Dustfall	Metals
Thallium (Tl)-Total	L2585978-36	SPP1-DUSTFALL-18	MET-DUST(DM2)-MS-VA	<0.000019	0.000019	mg/dm2.day		14-Apr-21	00:00	21-May-21	25-May-21	1475552	✓	✓	Dustfall	Metals
Tin (Sn)-Total	L2585978-36	SPP1-DUSTFALL-18	MET-DUST(DM2)-MS-VA	<0.000019	0.000019	mg/dm2.day		14-Apr-21	00:00	21-May-21	25-May-21	1475552	✓	✓	Dustfall	Metals
Titanium (Ti)-Total	L2585978-36	SPP1-DUSTFALL-18	MET-DUST(DM2)-MS-VA	<0.0019	0.0019	mg/dm2.day		14-Apr-21	00:00	21-May-21	25-May-21	1475552	✓	✓	Dustfall	Metals
Uranium (U)-Total	L2585978-36	SPP1-DUSTFALL-18	MET-DUST(DM2)-MS-VA	<0.0000019	0.0000019	mg/dm2.day		14-Apr-21	00:00	21-May-21	25-May-21	1475552	✓	✓	Dustfall	Metals
Vanadium (V)-Total	L2585978-36	SPP1-DUSTFALL-18	MET-DUST(DM2)-MS-VA	<0.00019	0.00019	mg/dm2.day		14-Apr-21	00:00	21-May-21	25-May-21	1475552	✓	✓	Dustfall	Metals
Zinc (Zn)-Total	L2585978-36	SPP1-DUSTFALL-18	MET-DUST(DM2)-MS-VA	<0.00057	0.00057	mg/dm2.day		14-Apr-21	00:00	21-May-21	25-May-21	1475552	✓	✓	Dustfall	Metals
Particulates (Dustfall)																
Fixed Dustfall	L2585978-37	SPP1-DUSTFALL-19	DUSTFALLS-ALL-DM2-VA	4.00	0.43	mg/dm2.day		21-Apr-21	00:00		26-May-21	1478236	✓	✓	Dustfall	Particulates

Results of Analysis L2585978

Job Reference NEW GOLD RRP
Report To Sarah Flesher, New Gold Inc. Rainy River Project
Date Received 10-May-2021 8:30
Report Date 4-Jun-2021 17:27
Report Version 1

Parameter	ALS ID	Client Sample ID	ALS Test Code	Results	Detection Limit	Units	Qual	Date Sampled	Time Sampled	Prep Date	Analysis Date	QC Lot	QC Eval	Hold Time Eval	Matrix	Class
Volatile Dustfall	L2585978-37	SPP1-DUSTFALL-19	DUSTFALLS-ALL-DM2-VA	4.18	0.43	mg/dm2.day		21-Apr-21	00:00		26-May-21	1478236	✓	✓	Dustfall	Particulates
Total Dustfall	L2585978-37	SPP1-DUSTFALL-19	DUSTFALLS-ALL-DM2-VA	9.17	0.43	mg/dm2.day		21-Apr-21	00:00		26-May-21	1478236	✓	✓	Dustfall	Particulates
Fixed Insoluble Dustfall	L2585978-37	SPP1-DUSTFALL-19	DUSTFALLS-ALL-DM2-VA	2.57	0.43	mg/dm2.day		21-Apr-21	00:00		26-May-21	1478236	✓	✓	Dustfall	Particulates
Volatile Insoluble Dustfall	L2585978-37	SPP1-DUSTFALL-19	DUSTFALLS-ALL-DM2-VA	1.97	0.43	mg/dm2.day		21-Apr-21	00:00		26-May-21	1478236	✓	✓	Dustfall	Particulates
Total Insoluble Dustfall	L2585978-37	SPP1-DUSTFALL-19	DUSTFALLS-ALL-DM2-VA	4.54	0.43	mg/dm2.day		21-Apr-21	00:00		26-May-21	1478236	✓	✓	Dustfall	Particulates
Fixed Soluble Dustfall	L2585978-37	SPP1-DUSTFALL-19	DUSTFALLS-ALL-DM2-VA	1.43	0.43	mg/dm2.day		21-Apr-21	00:00		26-May-21	1478236	✓	✓	Dustfall	Particulates
Volatile Soluble Dustfall	L2585978-37	SPP1-DUSTFALL-19	DUSTFALLS-ALL-DM2-VA	2.21	0.43	mg/dm2.day		21-Apr-21	00:00		26-May-21	1478236	✓	✓	Dustfall	Particulates
Total Soluble Dustfall	L2585978-37	SPP1-DUSTFALL-19	DUSTFALLS-ALL-DM2-VA	4.63	0.43	mg/dm2.day		21-Apr-21	00:00		26-May-21	1478236	✓	✓	Dustfall	Particulates
Metals (Dustfall)																
Aluminum (Al)-Total	L2585978-37	SPP1-DUSTFALL-19	MET-DUST(DM2)-MS-VA	0.0164	0.00022	mg/dm2.day		21-Apr-21	00:00	21-May-21	25-May-21	1475552	✓	✓	Dustfall	Metals
Antimony (Sb)-Total	L2585978-37	SPP1-DUSTFALL-19	MET-DUST(DM2)-MS-VA	0.0000078	0.0000075	mg/dm2.day		21-Apr-21	00:00	21-May-21	25-May-21	1475552	✓	✓	Dustfall	Metals
Arsenic (As)-Total	L2585978-37	SPP1-DUSTFALL-19	MET-DUST(DM2)-MS-VA	0.0000237	0.0000075	mg/dm2.day		21-Apr-21	00:00	21-May-21	25-May-21	1475552	✓	✓	Dustfall	Metals
Barium (Ba)-Total	L2585978-37	SPP1-DUSTFALL-19	MET-DUST(DM2)-MS-VA	0.000193	0.0000037	mg/dm2.day		21-Apr-21	00:00	21-May-21	25-May-21	1475552	×	✓	Dustfall	Metals
Beryllium (Be)-Total	L2585978-37	SPP1-DUSTFALL-19	MET-DUST(DM2)-MS-VA	<0.000037	0.000037	mg/dm2.day		21-Apr-21	00:00	21-May-21	25-May-21	1475552	✓	✓	Dustfall	Metals
Bismuth (Bi)-Total	L2585978-37	SPP1-DUSTFALL-19	MET-DUST(DM2)-MS-VA	<0.000037	0.000037	mg/dm2.day		21-Apr-21	00:00	21-May-21	25-May-21	1475552	✓	✓	Dustfall	Metals
Boron (B)-Total	L2585978-37	SPP1-DUSTFALL-19	MET-DUST(DM2)-MS-VA	<0.00075	0.00075	mg/dm2.day		21-Apr-21	00:00	21-May-21	25-May-21	1475552	✓	✓	Dustfall	Metals
Cadmium (Cd)-Total	L2585978-37	SPP1-DUSTFALL-19	MET-DUST(DM2)-MS-VA	0.0000065	0.0000037	mg/dm2.day		21-Apr-21	00:00	21-May-21	25-May-21	1475552	✓	✓	Dustfall	Metals
Calcium (Ca)-Total	L2585978-37	SPP1-DUSTFALL-19	MET-DUST(DM2)-MS-VA	0.208	0.0015	mg/dm2.day		21-Apr-21	00:00	21-May-21	25-May-21	1475552	×	✓	Dustfall	Metals
Chromium (Cr)-Total	L2585978-37	SPP1-DUSTFALL-19	MET-DUST(DM2)-MS-VA	<0.000037	0.000037	mg/dm2.day		21-Apr-21	00:00	21-May-21	25-May-21	1475552	✓	✓	Dustfall	Metals
Cobalt (Co)-Total	L2585978-37	SPP1-DUSTFALL-19	MET-DUST(DM2)-MS-VA	0.0000102	0.0000075	mg/dm2.day		21-Apr-21	00:00	21-May-21	25-May-21	1475552	✓	✓	Dustfall	Metals
Copper (Cu)-Total	L2585978-37	SPP1-DUSTFALL-19	MET-DUST(DM2)-MS-VA	0.000744	0.000037	mg/dm2.day		21-Apr-21	00:00	21-May-21	25-May-21	1475552	×	✓	Dustfall	Metals
Iron (Fe)-Total	L2585978-37	SPP1-DUSTFALL-19	MET-DUST(DM2)-MS-VA	0.0191	0.0022	mg/dm2.day		21-Apr-21	00:00	21-May-21	25-May-21	1475552	✓	✓	Dustfall	Metals
Lead (Pb)-Total	L2585978-37	SPP1-DUSTFALL-19	MET-DUST(DM2)-MS-VA	0.000272	0.0000037	mg/dm2.day		21-Apr-21	00:00	21-May-21	25-May-21	1475552	×	✓	Dustfall	Metals
Lithium (Li)-Total	L2585978-37	SPP1-DUSTFALL-19	MET-DUST(DM2)-MS-VA	<0.00037	0.00037	mg/dm2.day		21-Apr-21	00:00	21-May-21	25-May-21	1475552	✓	✓	Dustfall	Metals
Magnesium (Mg)-Total	L2585978-37	SPP1-DUSTFALL-19	MET-DUST(DM2)-MS-VA	0.0424	0.00037	mg/dm2.day		21-Apr-21	00:00	21-May-21	25-May-21	1475552	✓	✓	Dustfall	Metals
Manganese (Mn)-Total	L2585978-37	SPP1-DUSTFALL-19	MET-DUST(DM2)-MS-VA	0.00256	0.0000075	mg/dm2.day		21-Apr-21	00:00	21-May-21	25-May-21	1475552	✓	✓	Dustfall	Metals
Molybdenum (Mo)-Total	L2585978-37	SPP1-DUSTFALL-19	MET-DUST(DM2)-MS-VA	<0.000030	0.000030	mg/dm2.day	DLB	21-Apr-21	00:00	21-May-21	25-May-21	1475552	×	✓	Dustfall	Metals
Nickel (Ni)-Total	L2585978-37	SPP1-DUSTFALL-19	MET-DUST(DM2)-MS-VA	0.000041	0.000037	mg/dm2.day		21-Apr-21	00:00	21-May-21	25-May-21	1475552	✓	✓	Dustfall	Metals
Phosphorus (P)-Total	L2585978-37	SPP1-DUSTFALL-19	MET-DUST(DM2)-MS-VA	0.216	0.0037	mg/dm2.day		21-Apr-21	00:00	21-May-21	25-May-21	1475552	✓	✓	Dustfall	Metals
Potassium (K)-Total	L2585978-37	SPP1-DUSTFALL-19	MET-DUST(DM2)-MS-VA	0.250	0.0037	mg/dm2.day		21-Apr-21	00:00	21-May-21	25-May-21	1475552	✓	✓	Dustfall	Metals
Selenium (Se)-Total	L2585978-37	SPP1-DUSTFALL-19	MET-DUST(DM2)-MS-VA	<0.000075	0.000075	mg/dm2.day		21-Apr-21	00:00	21-May-21	25-May-21	1475552	✓	✓	Dustfall	Metals
Silicon (Si)-Total	L2585978-37	SPP1-DUSTFALL-19	MET-DUST(DM2)-MS-VA	0.0231	0.0037	mg/dm2.day		21-Apr-21	00:00	21-May-21	25-May-21	1475552	✓	✓	Dustfall	Metals
Silver (Ag)-Total	L2585978-37	SPP1-DUSTFALL-19	MET-DUST(DM2)-MS-VA	0.00000452	0.00000075	mg/dm2.day		21-Apr-21	00:00	21-May-21	25-May-21	1475552	✓	✓	Dustfall	Metals
Sodium (Na)-Total	L2585978-37	SPP1-DUSTFALL-19	MET-DUST(DM2)-MS-VA	0.137	0.0037	mg/dm2.day		21-Apr-21	00:00	21-May-21	25-May-21	1475552	✓	✓	Dustfall	Metals
Strontium (Sr)-Total	L2585978-37	SPP1-DUSTFALL-19	MET-DUST(DM2)-MS-VA	0.000197	0.0000075	mg/dm2.day		21-Apr-21	00:00	21-May-21	25-May-21	1475552	✓	✓	Dustfall	Metals
Thallium (Tl)-Total	L2585978-37	SPP1-DUSTFALL-19	MET-DUST(DM2)-MS-VA	<0.0000075	0.0000075	mg/dm2.day		21-Apr-21	00:00	21-May-21	25-May-21	1475552	✓	✓	Dustfall	Metals
Tin (Sn)-Total	L2585978-37	SPP1-DUSTFALL-19	MET-DUST(DM2)-MS-VA	<0.0000075	0.0000075	mg/dm2.day		21-Apr-21	00:00	21-May-21	25-May-21	1475552	✓	✓	Dustfall	Metals
Titanium (Ti)-Total	L2585978-37	SPP1-DUSTFALL-19	MET-DUST(DM2)-MS-VA	<0.00075	0.00075	mg/dm2.day		21-Apr-21	00:00	21-May-21	25-May-21	1475552	✓	✓	Dustfall	Metals
Uranium (U)-Total	L2585978-37	SPP1-DUSTFALL-19	MET-DUST(DM2)-MS-VA	0.00000093	0.00000075	mg/dm2.day		21-Apr-21	00:00	21-May-21	25-May-21	1475552	✓	✓	Dustfall	Metals
Vanadium (V)-Total	L2585978-37	SPP1-DUSTFALL-19	MET-DUST(DM2)-MS-VA	<0.000075	0.000075	mg/dm2.day		21-Apr-21	00:00	21-May-21	25-May-21	1475552	✓	✓	Dustfall	Metals
Zinc (Zn)-Total	L2585978-37	SPP1-DUSTFALL-19	MET-DUST(DM2)-MS-VA	0.00462	0.00022	mg/dm2.day		21-Apr-21	00:00	21-May-21	25-May-21	1475552	✓	✓	Dustfall	Metals
Particulates (Dustfall)																
Fixed Dustfall	L2585978-38	SPP1-DUSTFALL-20	DUSTFALLS-ALL-DM2-VA	2.29	0.43	mg/dm2.day		28-Apr-21	00:00		26-May-21	1478236	✓	✓	Dustfall	Particulates
Volatile Dustfall	L2585978-38	SPP1-DUSTFALL-20	DUSTFALLS-ALL-DM2-VA	7.15	0.43	mg/dm2.day		28-Apr-21	00:00		26-May-21	1478236	✓	✓	Dustfall	Particulates
Total Dustfall	L2585978-38	SPP1-DUSTFALL-20	DUSTFALLS-ALL-DM2-VA	6.18	0.43	mg/dm2.day		28-Apr-21	00:00		26-May-21	1478236	✓	✓	Dustfall	Particulates
Fixed Insoluble Dustfall	L2585978-38	SPP1-DUSTFALL-20	DUSTFALLS-ALL-DM2-VA	1.54	0.43	mg/dm2.day		28-Apr-21	00:00		26-May-21	1478236	✓	✓	Dustfall	Particulates
Volatile Insoluble Dustfall	L2585978-38	SPP1-DUSTFALL-20	DUSTFALLS-ALL-DM2-VA	1.68	0.43	mg/dm2.day		28-Apr-21	00:00		26-May-21	1478236	✓	✓	Dustfall	Particulates
Total Insoluble Dustfall	L2585978-38	SPP1-DUSTFALL-20	DUSTFALLS-ALL-DM2-VA	3.22	0.43	mg/dm2.day		28-Apr-21	00:00		26-May-21	1478236	✓	✓	Dustfall	Particulates
Fixed Soluble Dustfall	L2585978-38	SPP1-DUSTFALL-20	DUSTFALLS-ALL-DM2-VA	0.75	0.43	mg/dm2.day		28-Apr-21	00:00		26-May-21	1478236	✓	✓	Dustfall	Particulates
Volatile Soluble Dustfall	L2585978-38	SPP1-DUSTFALL-20	DUSTFALLS-ALL-DM2-VA	5.46	0.43	mg/dm2.day		28-Apr-21	00:00		26-May-21	1478236	✓	✓	Dustfall	Particulates
Total Soluble Dustfall	L2585978-38	SPP1-DUSTFALL-20	DUSTFALLS-ALL-DM2-VA	2.96	0.43	mg/dm2.day		28-Apr-21	00:00		26-May-21	1478236	✓	✓	Dustfall	Particulates
Metals (Dustfall)																

Results of Analysis L2585978

Job Reference NEW GOLD RRP
Report To Sarah Flesher, New Gold Inc. Rainy River Project
Date Received 10-May-2021 8:30
Report Date 4-Jun-2021 17:27
Report Version 1

Parameter	ALS ID	Client Sample ID	ALS Test Code	Results	Detection Limit	Units	Qual	Date Sampled	Time Sampled	Prep Date	Analysis Date	QC Lot	QC Eval	Hold Time Eval	Matrix	Class
Aluminum (Al)-Total	L2585978-38	SPP1-DUSTFALL-20	MET-DUST(DM2)-MS-VA	0.0167	0.00020	mg/dm2.day		28-Apr-21	00:00	21-May-21	25-May-21	1475552	✓	✓	Dustfall	Metals
Antimony (Sb)-Total	L2585978-38	SPP1-DUSTFALL-20	MET-DUST(DM2)-MS-VA	<0.0000067	0.0000067	mg/dm2.day		28-Apr-21	00:00	21-May-21	25-May-21	1475552	✓	✓	Dustfall	Metals
Arsenic (As)-Total	L2585978-38	SPP1-DUSTFALL-20	MET-DUST(DM2)-MS-VA	0.0000111	0.0000067	mg/dm2.day		28-Apr-21	00:00	21-May-21	25-May-21	1475552	✓	✓	Dustfall	Metals
Barium (Ba)-Total	L2585978-38	SPP1-DUSTFALL-20	MET-DUST(DM2)-MS-VA	0.000137	0.0000034	mg/dm2.day		28-Apr-21	00:00	21-May-21	25-May-21	1475552	×	✓	Dustfall	Metals
Beryllium (Be)-Total	L2585978-38	SPP1-DUSTFALL-20	MET-DUST(DM2)-MS-VA	<0.000034	0.000034	mg/dm2.day		28-Apr-21	00:00	21-May-21	25-May-21	1475552	✓	✓	Dustfall	Metals
Bismuth (Bi)-Total	L2585978-38	SPP1-DUSTFALL-20	MET-DUST(DM2)-MS-VA	<0.000034	0.000034	mg/dm2.day		28-Apr-21	00:00	21-May-21	25-May-21	1475552	✓	✓	Dustfall	Metals
Boron (B)-Total	L2585978-38	SPP1-DUSTFALL-20	MET-DUST(DM2)-MS-VA	<0.00067	0.00067	mg/dm2.day		28-Apr-21	00:00	21-May-21	25-May-21	1475552	✓	✓	Dustfall	Metals
Cadmium (Cd)-Total	L2585978-38	SPP1-DUSTFALL-20	MET-DUST(DM2)-MS-VA	<0.0000034	0.0000034	mg/dm2.day		28-Apr-21	00:00	21-May-21	25-May-21	1475552	✓	✓	Dustfall	Metals
Calcium (Ca)-Total	L2585978-38	SPP1-DUSTFALL-20	MET-DUST(DM2)-MS-VA	0.118	0.0013	mg/dm2.day		28-Apr-21	00:00	21-May-21	25-May-21	1475552	×	✓	Dustfall	Metals
Chromium (Cr)-Total	L2585978-38	SPP1-DUSTFALL-20	MET-DUST(DM2)-MS-VA	<0.000034	0.000034	mg/dm2.day		28-Apr-21	00:00	21-May-21	25-May-21	1475552	✓	✓	Dustfall	Metals
Cobalt (Co)-Total	L2585978-38	SPP1-DUSTFALL-20	MET-DUST(DM2)-MS-VA	<0.0000067	0.0000067	mg/dm2.day		28-Apr-21	00:00	21-May-21	25-May-21	1475552	✓	✓	Dustfall	Metals
Copper (Cu)-Total	L2585978-38	SPP1-DUSTFALL-20	MET-DUST(DM2)-MS-VA	0.00013	0.00013	mg/dm2.day	DLB	28-Apr-21	00:00	21-May-21	25-May-21	1475552	×	✓	Dustfall	Metals
Iron (Fe)-Total	L2585978-38	SPP1-DUSTFALL-20	MET-DUST(DM2)-MS-VA	0.0173	0.0020	mg/dm2.day		28-Apr-21	00:00	21-May-21	25-May-21	1475552	✓	✓	Dustfall	Metals
Lead (Pb)-Total	L2585978-38	SPP1-DUSTFALL-20	MET-DUST(DM2)-MS-VA	0.0000540	0.0000034	mg/dm2.day		28-Apr-21	00:00	21-May-21	25-May-21	1475552	×	✓	Dustfall	Metals
Lithium (Li)-Total	L2585978-38	SPP1-DUSTFALL-20	MET-DUST(DM2)-MS-VA	<0.00034	0.00034	mg/dm2.day		28-Apr-21	00:00	21-May-21	25-May-21	1475552	✓	✓	Dustfall	Metals
Magnesium (Mg)-Total	L2585978-38	SPP1-DUSTFALL-20	MET-DUST(DM2)-MS-VA	0.0406	0.00034	mg/dm2.day		28-Apr-21	00:00	21-May-21	25-May-21	1475552	✓	✓	Dustfall	Metals
Manganese (Mn)-Total	L2585978-38	SPP1-DUSTFALL-20	MET-DUST(DM2)-MS-VA	0.00174	0.0000067	mg/dm2.day		28-Apr-21	00:00	21-May-21	25-May-21	1475552	✓	✓	Dustfall	Metals
Molybdenum (Mo)-Total	L2585978-38	SPP1-DUSTFALL-20	MET-DUST(DM2)-MS-VA	<0.000017	0.000017	mg/dm2.day	DLB	28-Apr-21	00:00	21-May-21	25-May-21	1475552	×	✓	Dustfall	Metals
Nickel (Ni)-Total	L2585978-38	SPP1-DUSTFALL-20	MET-DUST(DM2)-MS-VA	0.000064	0.000034	mg/dm2.day		28-Apr-21	00:00	21-May-21	25-May-21	1475552	✓	✓	Dustfall	Metals
Phosphorus (P)-Total	L2585978-38	SPP1-DUSTFALL-20	MET-DUST(DM2)-MS-VA	0.109	0.0034	mg/dm2.day		28-Apr-21	00:00	21-May-21	25-May-21	1475552	✓	✓	Dustfall	Metals
Potassium (K)-Total	L2585978-38	SPP1-DUSTFALL-20	MET-DUST(DM2)-MS-VA	0.133	0.0034	mg/dm2.day		28-Apr-21	00:00	21-May-21	25-May-21	1475552	✓	✓	Dustfall	Metals
Selenium (Se)-Total	L2585978-38	SPP1-DUSTFALL-20	MET-DUST(DM2)-MS-VA	<0.000067	0.000067	mg/dm2.day		28-Apr-21	00:00	21-May-21	25-May-21	1475552	✓	✓	Dustfall	Metals
Silicon (Si)-Total	L2585978-38	SPP1-DUSTFALL-20	MET-DUST(DM2)-MS-VA	0.0228	0.0034	mg/dm2.day		28-Apr-21	00:00	21-May-21	25-May-21	1475552	✓	✓	Dustfall	Metals
Silver (Ag)-Total	L2585978-38	SPP1-DUSTFALL-20	MET-DUST(DM2)-MS-VA	0.00000106	0.00000067	mg/dm2.day		28-Apr-21	00:00	21-May-21	25-May-21	1475552	✓	✓	Dustfall	Metals
Sodium (Na)-Total	L2585978-38	SPP1-DUSTFALL-20	MET-DUST(DM2)-MS-VA	0.0115	0.0034	mg/dm2.day		28-Apr-21	00:00	21-May-21	25-May-21	1475552	✓	✓	Dustfall	Metals
Strontium (Sr)-Total	L2585978-38	SPP1-DUSTFALL-20	MET-DUST(DM2)-MS-VA	0.000171	0.0000067	mg/dm2.day		28-Apr-21	00:00	21-May-21	25-May-21	1475552	✓	✓	Dustfall	Metals
Thallium (Tl)-Total	L2585978-38	SPP1-DUSTFALL-20	MET-DUST(DM2)-MS-VA	<0.0000067	0.0000067	mg/dm2.day		28-Apr-21	00:00	21-May-21	25-May-21	1475552	✓	✓	Dustfall	Metals
Tin (Sn)-Total	L2585978-38	SPP1-DUSTFALL-20	MET-DUST(DM2)-MS-VA	<0.0000067	0.0000067	mg/dm2.day		28-Apr-21	00:00	21-May-21	25-May-21	1475552	✓	✓	Dustfall	Metals
Titanium (Ti)-Total	L2585978-38	SPP1-DUSTFALL-20	MET-DUST(DM2)-MS-VA	<0.00067	0.00067	mg/dm2.day		28-Apr-21	00:00	21-May-21	25-May-21	1475552	✓	✓	Dustfall	Metals
Uranium (U)-Total	L2585978-38	SPP1-DUSTFALL-20	MET-DUST(DM2)-MS-VA	<0.00000067	0.00000067	mg/dm2.day		28-Apr-21	00:00	21-May-21	25-May-21	1475552	✓	✓	Dustfall	Metals
Vanadium (V)-Total	L2585978-38	SPP1-DUSTFALL-20	MET-DUST(DM2)-MS-VA	<0.000067	0.000067	mg/dm2.day		28-Apr-21	00:00	21-May-21	25-May-21	1475552	✓	✓	Dustfall	Metals
Zinc (Zn)-Total	L2585978-38	SPP1-DUSTFALL-20	MET-DUST(DM2)-MS-VA	0.00107	0.00020	mg/dm2.day		28-Apr-21	00:00	21-May-21	25-May-21	1475552	✓	✓	Dustfall	Metals
Particulates (Dustfall)																
Fixed Dustfall	L2585978-39	DUSTFALL-GALLINGER ROAD	DUSTFALLS-ALL-DM2-VA	<0.10	0.10	mg/dm2.day		03-May-21	00:00		26-May-21	1478236	✓	✓	Dustfall	Particulates
Volatile Dustfall	L2585978-39	DUSTFALL-GALLINGER ROAD	DUSTFALLS-ALL-DM2-VA	0.19	0.10	mg/dm2.day		03-May-21	00:00		26-May-21	1478236	✓	✓	Dustfall	Particulates
Total Dustfall	L2585978-39	DUSTFALL-GALLINGER ROAD	DUSTFALLS-ALL-DM2-VA	0.28	0.10	mg/dm2.day		03-May-21	00:00		26-May-21	1478236	✓	✓	Dustfall	Particulates
Fixed Insoluble Dustfall	L2585978-39	DUSTFALL-GALLINGER ROAD	DUSTFALLS-ALL-DM2-VA	<0.10	0.10	mg/dm2.day		03-May-21	00:00		26-May-21	1478236	✓	✓	Dustfall	Particulates
Volatile Insoluble Dustfall	L2585978-39	DUSTFALL-GALLINGER ROAD	DUSTFALLS-ALL-DM2-VA	0.14	0.10	mg/dm2.day		03-May-21	00:00		26-May-21	1478236	✓	✓	Dustfall	Particulates
Total Insoluble Dustfall	L2585978-39	DUSTFALL-GALLINGER ROAD	DUSTFALLS-ALL-DM2-VA	0.20	0.10	mg/dm2.day		03-May-21	00:00		26-May-21	1478236	✓	✓	Dustfall	Particulates
Fixed Soluble Dustfall	L2585978-39	DUSTFALL-GALLINGER ROAD	DUSTFALLS-ALL-DM2-VA	<0.10	0.10	mg/dm2.day		03-May-21	00:00		26-May-21	1478236	✓	✓	Dustfall	Particulates
Volatile Soluble Dustfall	L2585978-39	DUSTFALL-GALLINGER ROAD	DUSTFALLS-ALL-DM2-VA	<0.10	0.10	mg/dm2.day		03-May-21	00:00		26-May-21	1478236	✓	✓	Dustfall	Particulates
Total Soluble Dustfall	L2585978-39	DUSTFALL-GALLINGER ROAD	DUSTFALLS-ALL-DM2-VA	<0.10	0.10	mg/dm2.day		03-May-21	00:00		26-May-21	1478236	✓	✓	Dustfall	Particulates
Metals (Dustfall)																
Aluminum (Al)-Total	L2585978-39	DUSTFALL-GALLINGER ROAD	MET-DUST(DM2)-MS-VA	0.00108	0.000060	mg/dm2.day		03-May-21	00:00	20-May-21	25-May-21	1475039	✓	✓	Dustfall	Metals
Antimony (Sb)-Total	L2585978-39	DUSTFALL-GALLINGER ROAD	MET-DUST(DM2)-MS-VA	<0.0000060	0.0000060	mg/dm2.day	DLB	03-May-21	00:00	20-May-21	25-May-21	1475039	×	✓	Dustfall	Metals
Arsenic (As)-Total	L2585978-39	DUSTFALL-GALLINGER ROAD	MET-DUST(DM2)-MS-VA	<0.0000020	0.0000020	mg/dm2.day		03-May-21	00:00	20-May-21	25-May-21	1475039	✓	✓	Dustfall	Metals
Barium (Ba)-Total	L2585978-39	DUSTFALL-GALLINGER ROAD	MET-DUST(DM2)-MS-VA	0.0000277	0.0000010	mg/dm2.day		03-May-21	00:00	20-May-21	25-May-21	1475039	×	✓	Dustfall	Metals
Beryllium (Be)-Total	L2585978-39	DUSTFALL-GALLINGER ROAD	MET-DUST(DM2)-MS-VA	<0.000010	0.000010	mg/dm2.day		03-May-21	00:00	20-May-21	25-May-21	1475039	✓	✓	Dustfall	Metals
Bismuth (Bi)-Total	L2585978-39	DUSTFALL-GALLINGER ROAD	MET-DUST(DM2)-MS-VA	<0.000010	0.000010	mg/dm2.day		03-May-21	00:00	20-May-21	25-May-21	1475039	✓	✓	Dustfall	Metals
Boron (B)-Total	L2585978-39	DUSTFALL-GALLINGER ROAD	MET-DUST(DM2)-MS-VA	<0.00020	0.00020	mg/dm2.day		03-May-21	00:00	20-May-21	25-May-21	1475039	✓	✓	Dustfall	Metals
Cadmium (Cd)-Total	L2585978-39	DUSTFALL-GALLINGER ROAD	MET-DUST(DM2)-MS-VA	<0.0000010	0.0000010	mg/dm2.day		03-May-21	00:00	20-May-21	25-May-21	1475039	✓	✓	Dustfall	Metals
Calcium (Ca)-Total	L2585978-39	DUSTFALL-GALLINGER ROAD	MET-DUST(DM2)-MS-VA	0.0106	0.00040	mg/dm2.day		03-May-21	00:00	20-May-21	25-May-21	1475039	✓	✓	Dustfall	Metals
Chromium (Cr)-Total	L2585978-39	DUSTFALL-GALLINGER ROAD	MET-DUST(DM2)-MS-VA	<0.000010	0.000010	mg/dm2.day		03-May-21	00:00	20-May-21	25-May-21	1475039	✓	✓	Dustfall	Metals

Results of Analysis L2585978

Job Reference NEW GOLD RRP
Report To Sarah Flesher, New Gold Inc. Rainy River Project
Date Received 10-May-2021 8:30
Report Date 4-Jun-2021 17:27
Report Version 1

Parameter	ALS ID	Client Sample ID	ALS Test Code	Results	Detection Limit	Units	Qual	Date Sampled	Time Sampled	Prep Date	Analysis Date	QC Lot	QC Eval	Hold Time Eval	Matrix	Class
Cobalt (Co)-Total	L2585978-39	DUSTFALL-GALLINGER ROAD	MET-DUST(DM2)-MS-VA	<0.0000020	0.0000020	mg/dm2.day		03-May-21	00:00	20-May-21	25-May-21	1475039	✓	✓	Dustfall	Metals
Copper (Cu)-Total	L2585978-39	DUSTFALL-GALLINGER ROAD	MET-DUST(DM2)-MS-VA	0.000030	0.000010	mg/dm2.day		03-May-21	00:00	20-May-21	25-May-21	1475039	✓	✓	Dustfall	Metals
Iron (Fe)-Total	L2585978-39	DUSTFALL-GALLINGER ROAD	MET-DUST(DM2)-MS-VA	0.00119	0.00060	mg/dm2.day		03-May-21	00:00	20-May-21	25-May-21	1475039	✓	✓	Dustfall	Metals
Lead (Pb)-Total	L2585978-39	DUSTFALL-GALLINGER ROAD	MET-DUST(DM2)-MS-VA	0.0000023	0.0000010	mg/dm2.day		03-May-21	00:00	20-May-21	25-May-21	1475039	✓	✓	Dustfall	Metals
Lithium (Li)-Total	L2585978-39	DUSTFALL-GALLINGER ROAD	MET-DUST(DM2)-MS-VA	<0.00010	0.00010	mg/dm2.day		03-May-21	00:00	20-May-21	25-May-21	1475039	✓	✓	Dustfall	Metals
Magnesium (Mg)-Total	L2585978-39	DUSTFALL-GALLINGER ROAD	MET-DUST(DM2)-MS-VA	0.00285	0.00010	mg/dm2.day		03-May-21	00:00	20-May-21	25-May-21	1475039	✓	✓	Dustfall	Metals
Manganese (Mn)-Total	L2585978-39	DUSTFALL-GALLINGER ROAD	MET-DUST(DM2)-MS-VA	0.000112	0.0000020	mg/dm2.day		03-May-21	00:00	20-May-21	25-May-21	1475039	✓	✓	Dustfall	Metals
Molybdenum (Mo)-Total	L2585978-39	DUSTFALL-GALLINGER ROAD	MET-DUST(DM2)-MS-VA	<0.0000010	0.0000010	mg/dm2.day		03-May-21	00:00	20-May-21	25-May-21	1475039	✓	✓	Dustfall	Metals
Nickel (Ni)-Total	L2585978-39	DUSTFALL-GALLINGER ROAD	MET-DUST(DM2)-MS-VA	<0.000010	0.000010	mg/dm2.day		03-May-21	00:00	20-May-21	25-May-21	1475039	✓	✓	Dustfall	Metals
Phosphorus (P)-Total	L2585978-39	DUSTFALL-GALLINGER ROAD	MET-DUST(DM2)-MS-VA	<0.0040	0.0040	mg/dm2.day	DLB	03-May-21	00:00	20-May-21	25-May-21	1475039	×	✓	Dustfall	Metals
Potassium (K)-Total	L2585978-39	DUSTFALL-GALLINGER ROAD	MET-DUST(DM2)-MS-VA	0.0053	0.0010	mg/dm2.day		03-May-21	00:00	20-May-21	25-May-21	1475039	✓	✓	Dustfall	Metals
Selenium (Se)-Total	L2585978-39	DUSTFALL-GALLINGER ROAD	MET-DUST(DM2)-MS-VA	<0.000020	0.000020	mg/dm2.day		03-May-21	00:00	20-May-21	25-May-21	1475039	✓	✓	Dustfall	Metals
Silicon (Si)-Total	L2585978-39	DUSTFALL-GALLINGER ROAD	MET-DUST(DM2)-MS-VA	0.0024	0.0010	mg/dm2.day		03-May-21	00:00	20-May-21	25-May-21	1475039	✓	✓	Dustfall	Metals
Silver (Ag)-Total	L2585978-39	DUSTFALL-GALLINGER ROAD	MET-DUST(DM2)-MS-VA	<0.00000020	0.00000020	mg/dm2.day		03-May-21	00:00	20-May-21	25-May-21	1475039	✓	✓	Dustfall	Metals
Sodium (Na)-Total	L2585978-39	DUSTFALL-GALLINGER ROAD	MET-DUST(DM2)-MS-VA	0.0033	0.0010	mg/dm2.day		03-May-21	00:00	20-May-21	25-May-21	1475039	✓	✓	Dustfall	Metals
Strontium (Sr)-Total	L2585978-39	DUSTFALL-GALLINGER ROAD	MET-DUST(DM2)-MS-VA	0.0000317	0.0000020	mg/dm2.day		03-May-21	00:00	20-May-21	25-May-21	1475039	✓	✓	Dustfall	Metals
Thallium (Tl)-Total	L2585978-39	DUSTFALL-GALLINGER ROAD	MET-DUST(DM2)-MS-VA	<0.0000020	0.0000020	mg/dm2.day		03-May-21	00:00	20-May-21	25-May-21	1475039	✓	✓	Dustfall	Metals
Tin (Sn)-Total	L2585978-39	DUSTFALL-GALLINGER ROAD	MET-DUST(DM2)-MS-VA	<0.0000020	0.0000020	mg/dm2.day		03-May-21	00:00	20-May-21	25-May-21	1475039	×	✓	Dustfall	Metals
Titanium (Ti)-Total	L2585978-39	DUSTFALL-GALLINGER ROAD	MET-DUST(DM2)-MS-VA	<0.00020	0.00020	mg/dm2.day		03-May-21	00:00	20-May-21	25-May-21	1475039	✓	✓	Dustfall	Metals
Uranium (U)-Total	L2585978-39	DUSTFALL-GALLINGER ROAD	MET-DUST(DM2)-MS-VA	<0.00000020	0.00000020	mg/dm2.day		03-May-21	00:00	20-May-21	25-May-21	1475039	✓	✓	Dustfall	Metals
Vanadium (V)-Total	L2585978-39	DUSTFALL-GALLINGER ROAD	MET-DUST(DM2)-MS-VA	<0.000020	0.000020	mg/dm2.day		03-May-21	00:00	20-May-21	25-May-21	1475039	✓	✓	Dustfall	Metals
Zinc (Zn)-Total	L2585978-39	DUSTFALL-GALLINGER ROAD	MET-DUST(DM2)-MS-VA	0.000080	0.000060	mg/dm2.day		03-May-21	00:00	20-May-21	25-May-21	1475039	✓	✓	Dustfall	Metals
Particulates (Dustfall)																
Fixed Dustfall	L2585978-40	DUSTFALL-TAIT ROAD (SOUTH)	DUSTFALLS-ALL-DM2-VA	1.08	0.10	mg/dm2.day		03-May-21	00:00		26-May-21	1478236	✓	✓	Dustfall	Particulates
Volatile Dustfall	L2585978-40	DUSTFALL-TAIT ROAD (SOUTH)	DUSTFALLS-ALL-DM2-VA	0.70	0.10	mg/dm2.day		03-May-21	00:00		26-May-21	1478236	✓	✓	Dustfall	Particulates
Total Dustfall	L2585978-40	DUSTFALL-TAIT ROAD (SOUTH)	DUSTFALLS-ALL-DM2-VA	1.78	0.10	mg/dm2.day		03-May-21	00:00		26-May-21	1478236	✓	✓	Dustfall	Particulates
Fixed Insoluble Dustfall	L2585978-40	DUSTFALL-TAIT ROAD (SOUTH)	DUSTFALLS-ALL-DM2-VA	0.84	0.10	mg/dm2.day		03-May-21	00:00		26-May-21	1478236	✓	✓	Dustfall	Particulates
Volatile Insoluble Dustfall	L2585978-40	DUSTFALL-TAIT ROAD (SOUTH)	DUSTFALLS-ALL-DM2-VA	0.52	0.10	mg/dm2.day		03-May-21	00:00		26-May-21	1478236	✓	✓	Dustfall	Particulates
Total Insoluble Dustfall	L2585978-40	DUSTFALL-TAIT ROAD (SOUTH)	DUSTFALLS-ALL-DM2-VA	1.36	0.10	mg/dm2.day		03-May-21	00:00		26-May-21	1478236	✓	✓	Dustfall	Particulates
Fixed Soluble Dustfall	L2585978-40	DUSTFALL-TAIT ROAD (SOUTH)	DUSTFALLS-ALL-DM2-VA	0.24	0.10	mg/dm2.day		03-May-21	00:00		26-May-21	1478236	✓	✓	Dustfall	Particulates
Volatile Soluble Dustfall	L2585978-40	DUSTFALL-TAIT ROAD (SOUTH)	DUSTFALLS-ALL-DM2-VA	0.18	0.10	mg/dm2.day		03-May-21	00:00		26-May-21	1478236	✓	✓	Dustfall	Particulates
Total Soluble Dustfall	L2585978-40	DUSTFALL-TAIT ROAD (SOUTH)	DUSTFALLS-ALL-DM2-VA	0.42	0.10	mg/dm2.day		03-May-21	00:00		26-May-21	1478236	✓	✓	Dustfall	Particulates
Metals (Dustfall)																
Aluminum (Al)-Total	L2585978-40	DUSTFALL-TAIT ROAD (SOUTH)	MET-DUST(DM2)-MS-VA	0.0145	0.000037	mg/dm2.day		03-May-21	00:00	20-May-21	25-May-21	1475039	✓	✓	Dustfall	Metals
Antimony (Sb)-Total	L2585978-40	DUSTFALL-TAIT ROAD (SOUTH)	MET-DUST(DM2)-MS-VA	<0.0000074	0.0000074	mg/dm2.day	DLB	03-May-21	00:00	20-May-21	25-May-21	1475039	×	✓	Dustfall	Metals
Arsenic (As)-Total	L2585978-40	DUSTFALL-TAIT ROAD (SOUTH)	MET-DUST(DM2)-MS-VA	0.0000108	0.0000012	mg/dm2.day		03-May-21	00:00	20-May-21	25-May-21	1475039	✓	✓	Dustfall	Metals
Barium (Ba)-Total	L2585978-40	DUSTFALL-TAIT ROAD (SOUTH)	MET-DUST(DM2)-MS-VA	0.0000761	0.00000062	mg/dm2.day		03-May-21	00:00	20-May-21	25-May-21	1475039	×	✓	Dustfall	Metals
Beryllium (Be)-Total	L2585978-40	DUSTFALL-TAIT ROAD (SOUTH)	MET-DUST(DM2)-MS-VA	<0.0000062	0.0000062	mg/dm2.day		03-May-21	00:00	20-May-21	25-May-21	1475039	✓	✓	Dustfall	Metals
Bismuth (Bi)-Total	L2585978-40	DUSTFALL-TAIT ROAD (SOUTH)	MET-DUST(DM2)-MS-VA	<0.0000062	0.0000062	mg/dm2.day		03-May-21	00:00	20-May-21	25-May-21	1475039	✓	✓	Dustfall	Metals
Boron (B)-Total	L2585978-40	DUSTFALL-TAIT ROAD (SOUTH)	MET-DUST(DM2)-MS-VA	0.00014	0.00012	mg/dm2.day		03-May-21	00:00	20-May-21	25-May-21	1475039	✓	✓	Dustfall	Metals
Cadmium (Cd)-Total	L2585978-40	DUSTFALL-TAIT ROAD (SOUTH)	MET-DUST(DM2)-MS-VA	0.00000238	0.00000062	mg/dm2.day		03-May-21	00:00	20-May-21	25-May-21	1475039	✓	✓	Dustfall	Metals
Calcium (Ca)-Total	L2585978-40	DUSTFALL-TAIT ROAD (SOUTH)	MET-DUST(DM2)-MS-VA	0.0451	0.00025	mg/dm2.day		03-May-21	00:00	20-May-21	25-May-21	1475039	✓	✓	Dustfall	Metals
Chromium (Cr)-Total	L2585978-40	DUSTFALL-TAIT ROAD (SOUTH)	MET-DUST(DM2)-MS-VA	0.0000301	0.0000062	mg/dm2.day		03-May-21	00:00	20-May-21	25-May-21	1475039	✓	✓	Dustfall	Metals
Cobalt (Co)-Total	L2585978-40	DUSTFALL-TAIT ROAD (SOUTH)	MET-DUST(DM2)-MS-VA	0.0000077	0.0000012	mg/dm2.day		03-May-21	00:00	20-May-21	25-May-21	1475039	✓	✓	Dustfall	Metals
Copper (Cu)-Total	L2585978-40	DUSTFALL-TAIT ROAD (SOUTH)	MET-DUST(DM2)-MS-VA	0.000162	0.0000062	mg/dm2.day		03-May-21	00:00	20-May-21	25-May-21	1475039	✓	✓	Dustfall	Metals
Iron (Fe)-Total	L2585978-40	DUSTFALL-TAIT ROAD (SOUTH)	MET-DUST(DM2)-MS-VA	0.0172	0.00037	mg/dm2.day		03-May-21	00:00	20-May-21	25-May-21	1475039	✓	✓	Dustfall	Metals
Lead (Pb)-Total	L2585978-40	DUSTFALL-TAIT ROAD (SOUTH)	MET-DUST(DM2)-MS-VA	0.0000209	0.00000062	mg/dm2.day		03-May-21	00:00	20-May-21	25-May-21	1475039	✓	✓	Dustfall	Metals
Lithium (Li)-Total	L2585978-40	DUSTFALL-TAIT ROAD (SOUTH)	MET-DUST(DM2)-MS-VA	<0.000062	0.000062	mg/dm2.day		03-May-21	00:00	20-May-21	25-May-21	1475039	✓	✓	Dustfall	Metals
Magnesium (Mg)-Total	L2585978-40	DUSTFALL-TAIT ROAD (SOUTH)	MET-DUST(DM2)-MS-VA	0.0145	0.000062	mg/dm2.day		03-May-21	00:00	20-May-21	25-May-21	1475039	✓	✓	Dustfall	Metals
Manganese (Mn)-Total	L2585978-40	DUSTFALL-TAIT ROAD (SOUTH)	MET-DUST(DM2)-MS-VA	0.000681	0.0000012	mg/dm2.day		03-May-21	00:00	20-May-21	25-May-21	1475039	✓	✓	Dustfall	Metals
Molybdenum (Mo)-Total	L2585978-40	DUSTFALL-TAIT ROAD (SOUTH)	MET-DUST(DM2)-MS-VA	0.00000351	0.00000062	mg/dm2.day		03-May-21	00:00	20-May-21	25-May-21	1475039	✓	✓	Dustfall	Metals
Nickel (Ni)-Total	L2585978-40	DUSTFALL-TAIT ROAD (SOUTH)	MET-DUST(DM2)-MS-VA	0.0000340	0.0000062	mg/dm2.day		03-May-21	00:00	20-May-21	25-May-21	1475039	✓	✓	Dustfall	Metals
Phosphorus (P)-Total	L2585978-40	DUSTFALL-TAIT ROAD (SOUTH)	MET-DUST(DM2)-MS-VA	0.0377	0.00062	mg/dm2.day		03-May-21	00:00	20-May-21	25-May-21	1475039	×	✓	Dustfall	Metals

Results of Analysis L2585978

Job Reference NEW GOLD RRP
Report To Sarah Flesher, New Gold Inc. Rainy River Project
Date Received 10-May-2021 8:30
Report Date 4-Jun-2021 17:27
Report Version 1

Parameter	ALS ID	Client Sample ID	ALS Test Code	Results	Detection Limit	Units	Qual	Date Sampled	Time Sampled	Prep Date	Analysis Date	QC Lot	QC Eval	Hold Time Eval	Matrix	Class
Potassium (K)-Total	L2585978-40	DUSTFALL-TAIT ROAD (SOUTH)	MET-DUST(DM2)-MS-VA	0.0491	0.00062	mg/dm2.day		03-May-21	00:00	20-May-21	25-May-21	1475039	✓	✓	Dustfall	Metals
Selenium (Se)-Total	L2585978-40	DUSTFALL-TAIT ROAD (SOUTH)	MET-DUST(DM2)-MS-VA	<0.000012	0.000012	mg/dm2.day		03-May-21	00:00	20-May-21	25-May-21	1475039	✓	✓	Dustfall	Metals
Silicon (Si)-Total	L2585978-40	DUSTFALL-TAIT ROAD (SOUTH)	MET-DUST(DM2)-MS-VA	0.0217	0.00062	mg/dm2.day		03-May-21	00:00	20-May-21	25-May-21	1475039	✓	✓	Dustfall	Metals
Silver (Ag)-Total	L2585978-40	DUSTFALL-TAIT ROAD (SOUTH)	MET-DUST(DM2)-MS-VA	0.00000218	0.00000012	mg/dm2.day		03-May-21	00:00	20-May-21	25-May-21	1475039	✓	✓	Dustfall	Metals
Sodium (Na)-Total	L2585978-40	DUSTFALL-TAIT ROAD (SOUTH)	MET-DUST(DM2)-MS-VA	0.0186	0.00062	mg/dm2.day		03-May-21	00:00	20-May-21	25-May-21	1475039	✓	✓	Dustfall	Metals
Strontium (Sr)-Total	L2585978-40	DUSTFALL-TAIT ROAD (SOUTH)	MET-DUST(DM2)-MS-VA	0.000126	0.0000012	mg/dm2.day		03-May-21	00:00	20-May-21	25-May-21	1475039	✓	✓	Dustfall	Metals
Thallium (Tl)-Total	L2585978-40	DUSTFALL-TAIT ROAD (SOUTH)	MET-DUST(DM2)-MS-VA	<0.0000012	0.0000012	mg/dm2.day		03-May-21	00:00	20-May-21	25-May-21	1475039	✓	✓	Dustfall	Metals
Tin (Sn)-Total	L2585978-40	DUSTFALL-TAIT ROAD (SOUTH)	MET-DUST(DM2)-MS-VA	<0.0000012	0.0000012	mg/dm2.day		03-May-21	00:00	20-May-21	25-May-21	1475039	×	✓	Dustfall	Metals
Titanium (Ti)-Total	L2585978-40	DUSTFALL-TAIT ROAD (SOUTH)	MET-DUST(DM2)-MS-VA	0.00024	0.00012	mg/dm2.day		03-May-21	00:00	20-May-21	25-May-21	1475039	✓	✓	Dustfall	Metals
Uranium (U)-Total	L2585978-40	DUSTFALL-TAIT ROAD (SOUTH)	MET-DUST(DM2)-MS-VA	0.00000039	0.00000012	mg/dm2.day		03-May-21	00:00	20-May-21	25-May-21	1475039	✓	✓	Dustfall	Metals
Vanadium (V)-Total	L2585978-40	DUSTFALL-TAIT ROAD (SOUTH)	MET-DUST(DM2)-MS-VA	0.000030	0.000012	mg/dm2.day		03-May-21	00:00	20-May-21	25-May-21	1475039	✓	✓	Dustfall	Metals
Zinc (Zn)-Total	L2585978-40	DUSTFALL-TAIT ROAD (SOUTH)	MET-DUST(DM2)-MS-VA	0.000407	0.000037	mg/dm2.day		03-May-21	00:00	20-May-21	25-May-21	1475039	✓	✓	Dustfall	Metals
Particulates (Dustfall)																
Fixed Dustfall	L2585978-41	DUSTFALL-NORTHWEST	DUSTFALLS-ALL-DM2-VA	0.96	0.10	mg/dm2.day		03-May-21	00:00		26-May-21	1478236	✓	✓	Dustfall	Particulates
Volatile Dustfall	L2585978-41	DUSTFALL-NORTHWEST	DUSTFALLS-ALL-DM2-VA	0.72	0.10	mg/dm2.day		03-May-21	00:00		26-May-21	1478236	✓	✓	Dustfall	Particulates
Total Dustfall	L2585978-41	DUSTFALL-NORTHWEST	DUSTFALLS-ALL-DM2-VA	1.67	0.10	mg/dm2.day		03-May-21	00:00		26-May-21	1478236	✓	✓	Dustfall	Particulates
Fixed Insoluble Dustfall	L2585978-41	DUSTFALL-NORTHWEST	DUSTFALLS-ALL-DM2-VA	0.70	0.10	mg/dm2.day		03-May-21	00:00		26-May-21	1478236	✓	✓	Dustfall	Particulates
Volatile Insoluble Dustfall	L2585978-41	DUSTFALL-NORTHWEST	DUSTFALLS-ALL-DM2-VA	0.45	0.10	mg/dm2.day		03-May-21	00:00		26-May-21	1478236	✓	✓	Dustfall	Particulates
Total Insoluble Dustfall	L2585978-41	DUSTFALL-NORTHWEST	DUSTFALLS-ALL-DM2-VA	1.14	0.10	mg/dm2.day		03-May-21	00:00		26-May-21	1478236	✓	✓	Dustfall	Particulates
Fixed Soluble Dustfall	L2585978-41	DUSTFALL-NORTHWEST	DUSTFALLS-ALL-DM2-VA	0.26	0.10	mg/dm2.day		03-May-21	00:00		26-May-21	1478236	✓	✓	Dustfall	Particulates
Volatile Soluble Dustfall	L2585978-41	DUSTFALL-NORTHWEST	DUSTFALLS-ALL-DM2-VA	0.27	0.10	mg/dm2.day		03-May-21	00:00		26-May-21	1478236	✓	✓	Dustfall	Particulates
Total Soluble Dustfall	L2585978-41	DUSTFALL-NORTHWEST	DUSTFALLS-ALL-DM2-VA	0.53	0.10	mg/dm2.day		03-May-21	00:00		26-May-21	1478236	✓	✓	Dustfall	Particulates
Metals (Dustfall)																
Aluminum (Al)-Total	L2585978-41	DUSTFALL-NORTHWEST	MET-DUST(DM2)-MS-VA	0.00835	0.000052	mg/dm2.day		03-May-21	00:00	20-May-21	25-May-21	1475039	✓	✓	Dustfall	Metals
Antimony (Sb)-Total	L2585978-41	DUSTFALL-NORTHWEST	MET-DUST(DM2)-MS-VA	<0.0000035	0.0000035	mg/dm2.day	DLB	03-May-21	00:00	20-May-21	25-May-21	1475039	×	✓	Dustfall	Metals
Arsenic (As)-Total	L2585978-41	DUSTFALL-NORTHWEST	MET-DUST(DM2)-MS-VA	0.0000040	0.0000017	mg/dm2.day		03-May-21	00:00	20-May-21	25-May-21	1475039	✓	✓	Dustfall	Metals
Barium (Ba)-Total	L2585978-41	DUSTFALL-NORTHWEST	MET-DUST(DM2)-MS-VA	0.0000906	0.00000087	mg/dm2.day		03-May-21	00:00	20-May-21	25-May-21	1475039	×	✓	Dustfall	Metals
Beryllium (Be)-Total	L2585978-41	DUSTFALL-NORTHWEST	MET-DUST(DM2)-MS-VA	<0.0000087	0.0000087	mg/dm2.day		03-May-21	00:00	20-May-21	25-May-21	1475039	✓	✓	Dustfall	Metals
Bismuth (Bi)-Total	L2585978-41	DUSTFALL-NORTHWEST	MET-DUST(DM2)-MS-VA	<0.0000087	0.0000087	mg/dm2.day		03-May-21	00:00	20-May-21	25-May-21	1475039	✓	✓	Dustfall	Metals
Boron (B)-Total	L2585978-41	DUSTFALL-NORTHWEST	MET-DUST(DM2)-MS-VA	<0.00017	0.00017	mg/dm2.day		03-May-21	00:00	20-May-21	25-May-21	1475039	✓	✓	Dustfall	Metals
Cadmium (Cd)-Total	L2585978-41	DUSTFALL-NORTHWEST	MET-DUST(DM2)-MS-VA	0.00000246	0.00000087	mg/dm2.day		03-May-21	00:00	20-May-21	25-May-21	1475039	✓	✓	Dustfall	Metals
Calcium (Ca)-Total	L2585978-41	DUSTFALL-NORTHWEST	MET-DUST(DM2)-MS-VA	0.0501	0.00035	mg/dm2.day		03-May-21	00:00	20-May-21	25-May-21	1475039	✓	✓	Dustfall	Metals
Chromium (Cr)-Total	L2585978-41	DUSTFALL-NORTHWEST	MET-DUST(DM2)-MS-VA	0.0000148	0.0000087	mg/dm2.day		03-May-21	00:00	20-May-21	25-May-21	1475039	✓	✓	Dustfall	Metals
Cobalt (Co)-Total	L2585978-41	DUSTFALL-NORTHWEST	MET-DUST(DM2)-MS-VA	0.0000049	0.0000017	mg/dm2.day		03-May-21	00:00	20-May-21	25-May-21	1475039	✓	✓	Dustfall	Metals
Copper (Cu)-Total	L2585978-41	DUSTFALL-NORTHWEST	MET-DUST(DM2)-MS-VA	0.0000578	0.0000087	mg/dm2.day		03-May-21	00:00	20-May-21	25-May-21	1475039	✓	✓	Dustfall	Metals
Iron (Fe)-Total	L2585978-41	DUSTFALL-NORTHWEST	MET-DUST(DM2)-MS-VA	0.00814	0.00052	mg/dm2.day		03-May-21	00:00	20-May-21	25-May-21	1475039	✓	✓	Dustfall	Metals
Lead (Pb)-Total	L2585978-41	DUSTFALL-NORTHWEST	MET-DUST(DM2)-MS-VA	0.00000570	0.00000087	mg/dm2.day		03-May-21	00:00	20-May-21	25-May-21	1475039	✓	✓	Dustfall	Metals
Lithium (Li)-Total	L2585978-41	DUSTFALL-NORTHWEST	MET-DUST(DM2)-MS-VA	<0.000087	0.000087	mg/dm2.day		03-May-21	00:00	20-May-21	25-May-21	1475039	✓	✓	Dustfall	Metals
Magnesium (Mg)-Total	L2585978-41	DUSTFALL-NORTHWEST	MET-DUST(DM2)-MS-VA	0.00903	0.000087	mg/dm2.day		03-May-21	00:00	20-May-21	25-May-21	1475039	✓	✓	Dustfall	Metals
Manganese (Mn)-Total	L2585978-41	DUSTFALL-NORTHWEST	MET-DUST(DM2)-MS-VA	0.000258	0.0000017	mg/dm2.day		03-May-21	00:00	20-May-21	25-May-21	1475039	✓	✓	Dustfall	Metals
Molybdenum (Mo)-Total	L2585978-41	DUSTFALL-NORTHWEST	MET-DUST(DM2)-MS-VA	0.00000672	0.00000087	mg/dm2.day		03-May-21	00:00	20-May-21	25-May-21	1475039	✓	✓	Dustfall	Metals
Nickel (Ni)-Total	L2585978-41	DUSTFALL-NORTHWEST	MET-DUST(DM2)-MS-VA	0.0000106	0.0000087	mg/dm2.day		03-May-21	00:00	20-May-21	25-May-21	1475039	✓	✓	Dustfall	Metals
Phosphorus (P)-Total	L2585978-41	DUSTFALL-NORTHWEST	MET-DUST(DM2)-MS-VA	0.0217	0.00087	mg/dm2.day		03-May-21	00:00	20-May-21	25-May-21	1475039	×	✓	Dustfall	Metals
Potassium (K)-Total	L2585978-41	DUSTFALL-NORTHWEST	MET-DUST(DM2)-MS-VA	0.0253	0.00087	mg/dm2.day		03-May-21	00:00	20-May-21	25-May-21	1475039	✓	✓	Dustfall	Metals
Selenium (Se)-Total	L2585978-41	DUSTFALL-NORTHWEST	MET-DUST(DM2)-MS-VA	<0.000017	0.000017	mg/dm2.day		03-May-21	00:00	20-May-21	25-May-21	1475039	✓	✓	Dustfall	Metals
Silicon (Si)-Total	L2585978-41	DUSTFALL-NORTHWEST	MET-DUST(DM2)-MS-VA	0.0161	0.00087	mg/dm2.day		03-May-21	00:00	20-May-21	25-May-21	1475039	✓	✓	Dustfall	Metals
Silver (Ag)-Total	L2585978-41	DUSTFALL-NORTHWEST	MET-DUST(DM2)-MS-VA	0.00000025	0.00000017	mg/dm2.day		03-May-21	00:00	20-May-21	25-May-21	1475039	✓	✓	Dustfall	Metals
Sodium (Na)-Total	L2585978-41	DUSTFALL-NORTHWEST	MET-DUST(DM2)-MS-VA	0.0170	0.00087	mg/dm2.day		03-May-21	00:00	20-May-21	25-May-21	1475039	✓	✓	Dustfall	Metals
Strontium (Sr)-Total	L2585978-41	DUSTFALL-NORTHWEST	MET-DUST(DM2)-MS-VA	0.0000695	0.0000017	mg/dm2.day		03-May-21	00:00	20-May-21	25-May-21	1475039	✓	✓	Dustfall	Metals
Thallium (Tl)-Total	L2585978-41	DUSTFALL-NORTHWEST	MET-DUST(DM2)-MS-VA	<0.0000017	0.0000017	mg/dm2.day		03-May-21	00:00	20-May-21	25-May-21	1475039	✓	✓	Dustfall	Metals
Tin (Sn)-Total	L2585978-41	DUSTFALL-NORTHWEST	MET-DUST(DM2)-MS-VA	<0.0000017	0.0000017	mg/dm2.day		03-May-21	00:00	20-May-21	25-May-21	1475039	×	✓	Dustfall	Metals
Titanium (Ti)-Total	L2585978-41	DUSTFALL-NORTHWEST	MET-DUST(DM2)-MS-VA	0.00018	0.00017	mg/dm2.day		03-May-21	00:00	20-May-21	25-May-21	1475039	✓	✓	Dustfall	Metals
Uranium (U)-Total	L2585978-41	DUSTFALL-NORTHWEST	MET-DUST(DM2)-MS-VA	0.00000089	0.00000017	mg/dm2.day		03-May-21	00:00	20-May-21	25-May-21	1475039	✓	✓	Dustfall	Metals

Results of Analysis L2585978

Job Reference NEW GOLD RRP
Report To Sarah Flesher, New Gold Inc. Rainy River Project
Date Received 10-May-2021 8:30
Report Date 4-Jun-2021 17:27
Report Version 1

Parameter	ALS ID	Client Sample ID	ALS Test Code	Results	Detection Limit	Units	Qual	Date Sampled	Time Sampled	Prep Date	Analysis Date	QC Lot	QC Eval	Hold Time Eval	Matrix	Class
Vanadium (V)-Total	L2585978-41	DUSTFALL-NORTHWEST	MET-DUST(DM2)-MS-VA	0.000020	0.000017	mg/dm2.day		03-May-21	00:00	20-May-21	25-May-21	1475039	✓	✓	Dustfall	Metals
Zinc (Zn)-Total	L2585978-41	DUSTFALL-NORTHWEST	MET-DUST(DM2)-MS-VA	0.000479	0.000052	mg/dm2.day		03-May-21	00:00	20-May-21	25-May-21	1475039	✓	✓	Dustfall	Metals
Particulates (Dustfall)																
Fixed Dustfall	L2585978-43	SPP1-DUSTFALL-21	DUSTFALLS-ALL-DM2-VA	27.9	0.43	mg/dm2.day					26-May-21	1478236	✓	✓	Dustfall	Particulates
Volatile Dustfall	L2585978-43	SPP1-DUSTFALL-21	DUSTFALLS-ALL-DM2-VA	28.6	0.43	mg/dm2.day					26-May-21	1478236	✓	✓	Dustfall	Particulates
Total Dustfall	L2585978-43	SPP1-DUSTFALL-21	DUSTFALLS-ALL-DM2-VA	56.5	0.43	mg/dm2.day					26-May-21	1478236	✓	✓	Dustfall	Particulates
Fixed Insoluble Dustfall	L2585978-43	SPP1-DUSTFALL-21	DUSTFALLS-ALL-DM2-VA	20.6	0.43	mg/dm2.day					26-May-21	1478236	✓	✓	Dustfall	Particulates
Volatile Insoluble Dustfall	L2585978-43	SPP1-DUSTFALL-21	DUSTFALLS-ALL-DM2-VA	23.1	0.43	mg/dm2.day					26-May-21	1478236	✓	✓	Dustfall	Particulates
Total Insoluble Dustfall	L2585978-43	SPP1-DUSTFALL-21	DUSTFALLS-ALL-DM2-VA	43.8	0.43	mg/dm2.day					26-May-21	1478236	✓	✓	Dustfall	Particulates
Fixed Soluble Dustfall	L2585978-43	SPP1-DUSTFALL-21	DUSTFALLS-ALL-DM2-VA	7.33	0.43	mg/dm2.day					26-May-21	1478236	✓	✓	Dustfall	Particulates
Volatile Soluble Dustfall	L2585978-43	SPP1-DUSTFALL-21	DUSTFALLS-ALL-DM2-VA	5.46	0.43	mg/dm2.day					26-May-21	1478236	✓	✓	Dustfall	Particulates
Total Soluble Dustfall	L2585978-43	SPP1-DUSTFALL-21	DUSTFALLS-ALL-DM2-VA	12.8	0.43	mg/dm2.day					26-May-21	1478236	✓	✓	Dustfall	Particulates
Metals (Dustfall)																
Aluminum (Al)-Total	L2585978-43	SPP1-DUSTFALL-21	MET-DUST(DM2)-MS-VA	0.190	0.00019	mg/dm2.day				21-May-21	25-May-21	1475552	✓	✓	Dustfall	Metals
Antimony (Sb)-Total	L2585978-43	SPP1-DUSTFALL-21	MET-DUST(DM2)-MS-VA	0.0000171	0.0000064	mg/dm2.day				21-May-21	25-May-21	1475552	✓	✓	Dustfall	Metals
Arsenic (As)-Total	L2585978-43	SPP1-DUSTFALL-21	MET-DUST(DM2)-MS-VA	0.000274	0.0000064	mg/dm2.day				21-May-21	25-May-21	1475552	✓	✓	Dustfall	Metals
Barium (Ba)-Total	L2585978-43	SPP1-DUSTFALL-21	MET-DUST(DM2)-MS-VA	0.00301	0.0000032	mg/dm2.day				21-May-21	25-May-21	1475552	✗	✓	Dustfall	Metals
Beryllium (Be)-Total	L2585978-43	SPP1-DUSTFALL-21	MET-DUST(DM2)-MS-VA	<0.000032	0.000032	mg/dm2.day				21-May-21	25-May-21	1475552	✓	✓	Dustfall	Metals
Bismuth (Bi)-Total	L2585978-43	SPP1-DUSTFALL-21	MET-DUST(DM2)-MS-VA	<0.000032	0.000032	mg/dm2.day				21-May-21	25-May-21	1475552	✓	✓	Dustfall	Metals
Boron (B)-Total	L2585978-43	SPP1-DUSTFALL-21	MET-DUST(DM2)-MS-VA	<0.00064	0.00064	mg/dm2.day				21-May-21	25-May-21	1475552	✓	✓	Dustfall	Metals
Cadmium (Cd)-Total	L2585978-43	SPP1-DUSTFALL-21	MET-DUST(DM2)-MS-VA	0.000241	0.0000032	mg/dm2.day				21-May-21	25-May-21	1475552	✓	✓	Dustfall	Metals
Calcium (Ca)-Total	L2585978-43	SPP1-DUSTFALL-21	MET-DUST(DM2)-MS-VA	1.29	0.0013	mg/dm2.day				21-May-21	25-May-21	1475552	✗	✓	Dustfall	Metals
Chromium (Cr)-Total	L2585978-43	SPP1-DUSTFALL-21	MET-DUST(DM2)-MS-VA	0.000313	0.000032	mg/dm2.day				21-May-21	25-May-21	1475552	✓	✓	Dustfall	Metals
Cobalt (Co)-Total	L2585978-43	SPP1-DUSTFALL-21	MET-DUST(DM2)-MS-VA	0.000194	0.0000064	mg/dm2.day				21-May-21	25-May-21	1475552	✓	✓	Dustfall	Metals
Copper (Cu)-Total	L2585978-43	SPP1-DUSTFALL-21	MET-DUST(DM2)-MS-VA	0.00309	0.000032	mg/dm2.day				21-May-21	25-May-21	1475552	✗	✓	Dustfall	Metals
Iron (Fe)-Total	L2585978-43	SPP1-DUSTFALL-21	MET-DUST(DM2)-MS-VA	0.219	0.0019	mg/dm2.day				21-May-21	25-May-21	1475552	✓	✓	Dustfall	Metals
Lead (Pb)-Total	L2585978-43	SPP1-DUSTFALL-21	MET-DUST(DM2)-MS-VA	0.00139	0.0000032	mg/dm2.day				21-May-21	25-May-21	1475552	✗	✓	Dustfall	Metals
Lithium (Li)-Total	L2585978-43	SPP1-DUSTFALL-21	MET-DUST(DM2)-MS-VA	<0.00032	0.00032	mg/dm2.day				21-May-21	25-May-21	1475552	✓	✓	Dustfall	Metals
Magnesium (Mg)-Total	L2585978-43	SPP1-DUSTFALL-21	MET-DUST(DM2)-MS-VA	0.448	0.00032	mg/dm2.day				21-May-21	25-May-21	1475552	✓	✓	Dustfall	Metals
Manganese (Mn)-Total	L2585978-43	SPP1-DUSTFALL-21	MET-DUST(DM2)-MS-VA	0.0250	0.0000064	mg/dm2.day				21-May-21	25-May-21	1475552	✓	✓	Dustfall	Metals
Molybdenum (Mo)-Total	L2585978-43	SPP1-DUSTFALL-21	MET-DUST(DM2)-MS-VA	0.000170	0.0000032	mg/dm2.day				21-May-21	25-May-21	1475552	✗	✓	Dustfall	Metals
Nickel (Ni)-Total	L2585978-43	SPP1-DUSTFALL-21	MET-DUST(DM2)-MS-VA	0.000412	0.000032	mg/dm2.day				21-May-21	25-May-21	1475552	✓	✓	Dustfall	Metals
Phosphorus (P)-Total	L2585978-43	SPP1-DUSTFALL-21	MET-DUST(DM2)-MS-VA	1.23	0.0032	mg/dm2.day				21-May-21	25-May-21	1475552	✓	✓	Dustfall	Metals
Potassium (K)-Total	L2585978-43	SPP1-DUSTFALL-21	MET-DUST(DM2)-MS-VA	1.71	0.0032	mg/dm2.day				21-May-21	25-May-21	1475552	✓	✓	Dustfall	Metals
Selenium (Se)-Total	L2585978-43	SPP1-DUSTFALL-21	MET-DUST(DM2)-MS-VA	0.000148	0.000064	mg/dm2.day				21-May-21	25-May-21	1475552	✓	✓	Dustfall	Metals
Silicon (Si)-Total	L2585978-43	SPP1-DUSTFALL-21	MET-DUST(DM2)-MS-VA	0.343	0.0032	mg/dm2.day				21-May-21	25-May-21	1475552	✓	✓	Dustfall	Metals
Silver (Ag)-Total	L2585978-43	SPP1-DUSTFALL-21	MET-DUST(DM2)-MS-VA	0.0000349	0.00000064	mg/dm2.day				21-May-21	25-May-21	1475552	✓	✓	Dustfall	Metals
Sodium (Na)-Total	L2585978-43	SPP1-DUSTFALL-21	MET-DUST(DM2)-MS-VA	0.481	0.0032	mg/dm2.day				21-May-21	25-May-21	1475552	✓	✓	Dustfall	Metals
Strontium (Sr)-Total	L2585978-43	SPP1-DUSTFALL-21	MET-DUST(DM2)-MS-VA	0.00297	0.0000064	mg/dm2.day				21-May-21	25-May-21	1475552	✓	✓	Dustfall	Metals
Thallium (Tl)-Total	L2585978-43	SPP1-DUSTFALL-21	MET-DUST(DM2)-MS-VA	<0.0000064	0.0000064	mg/dm2.day				21-May-21	25-May-21	1475552	✓	✓	Dustfall	Metals
Tin (Sn)-Total	L2585978-43	SPP1-DUSTFALL-21	MET-DUST(DM2)-MS-VA	0.0000095	0.0000064	mg/dm2.day				21-May-21	25-May-21	1475552	✓	✓	Dustfall	Metals
Titanium (Ti)-Total	L2585978-43	SPP1-DUSTFALL-21	MET-DUST(DM2)-MS-VA	0.00201	0.00064	mg/dm2.day				21-May-21	25-May-21	1475552	✓	✓	Dustfall	Metals
Uranium (U)-Total	L2585978-43	SPP1-DUSTFALL-21	MET-DUST(DM2)-MS-VA	0.0000172	0.00000064	mg/dm2.day				21-May-21	25-May-21	1475552	✓	✓	Dustfall	Metals
Vanadium (V)-Total	L2585978-43	SPP1-DUSTFALL-21	MET-DUST(DM2)-MS-VA	0.000407	0.0000064	mg/dm2.day				21-May-21	25-May-21	1475552	✓	✓	Dustfall	Metals
Zinc (Zn)-Total	L2585978-43	SPP1-DUSTFALL-21	MET-DUST(DM2)-MS-VA	0.0330	0.00019	mg/dm2.day				21-May-21	25-May-21	1475552	✓	✓	Dustfall	Metals

Qualifier Legend

DLB Detection Limit Raised. Analyte detected at comparable level in Method Blank

Evaluation Legend

✓ QC Lot met ALS Data Quality Objectives or Test result met ALS Hold Time Recommendations
✗ QC Lot did not meet ALS Data Quality Objectives or Test result did not meet ALS Hold Time Recommendations

Duplicates L2585978

Job Reference NEW GOLD RRP
Report To Sarah Flesher, New Gold Inc. Rainy River Project
Date Received 10-May-2021 8:30
Report Date 4-Jun-2021 17:27
Report Version 1

ALS ID	Reference	Client Sample ID	QC Type	QC Lot #	Analyte	Sample Result	Duplicate Result	Detection Limit	Units	RPD	RPD Limit	Diff	Diff Limit	Qual	Eval	Matrix	Class
Particulates (Filter)																	
WG3534646-4	L2585978-1	SOUTH-TSP-356	DUP	1473131	Total particulate	125000	124000	2300	ug	0.8	5	-			✓	Filter	Particulates
WG3543195-2	L2585978-16	SOUTH-PM2.5-356	DUP	1479497	Total particulate	38	41	15	ug	7.6	10	-			✓	Filter	Particulates
Total Metals (Filter)																	
WG3535070-3	L2585978-1	SOUTH-TSP-356	DUP	1473427	Arsenic (As)	<3.0	<3.0	3.0	ug	N/A	20	-			✓	Filter	Total Metals
WG3535070-3	L2585978-1	SOUTH-TSP-356	DUP	1473427	Cadmium (Cd)	<2.0	<2.0	2.0	ug	N/A	20	-			✓	Filter	Total Metals
WG3535070-3	L2585978-1	SOUTH-TSP-356	DUP	1473427	Chromium (Cr)	9.7	10.8	5.0	ug	11	20	-			✓	Filter	Total Metals
WG3535070-3	L2585978-1	SOUTH-TSP-356	DUP	1473427	Cobalt (Co)	<2.0	2.2	2.0	ug	N/A	20	-			✓	Filter	Total Metals
WG3535070-3	L2585978-1	SOUTH-TSP-356	DUP	1473427	Copper (Cu)	105	113	4.0	ug	7	20	-			✓	Filter	Total Metals
WG3535070-3	L2585978-1	SOUTH-TSP-356	DUP	1473427	Iron (Fe)	2700	3110	20	ug	14	25	-			✓	Filter	Total Metals
WG3535070-3	L2585978-1	SOUTH-TSP-356	DUP	1473427	Lead (Pb)	6.3	7.4	3.0	ug	16	20	-			✓	Filter	Total Metals
WG3535070-3	L2585978-1	SOUTH-TSP-356	DUP	1473427	Manganese (Mn)	86.4	99.5	1.0	ug	14	20	-			✓	Filter	Total Metals
WG3535070-3	L2585978-1	SOUTH-TSP-356	DUP	1473427	Nickel (Ni)	5.8	6.4	3.0	ug	11	20	-			✓	Filter	Total Metals
WG3535070-3	L2585978-1	SOUTH-TSP-356	DUP	1473427	Selenium (Se)	<10	<10	10	ug	N/A	20	-			✓	Filter	Total Metals
WG3535070-3	L2585978-1	SOUTH-TSP-356	DUP	1473427	Vanadium (V)	<5.0	<5.0	5.0	ug	N/A	20	-			✓	Filter	Total Metals
WG3535070-3	L2585978-1	SOUTH-TSP-356	DUP	1473427	Zinc (Zn)	67.5	74.3	5.0	ug	9.5	20	-			✓	Filter	Total Metals
Metals (Dustfall)																	
WG3537224-3	L2585978-31	NOP1-DUSTFALL-4	DUP	1475039	Aluminum (Al)-Total	0.0600	0.0594	0.000043	mg/dm2.day	1.1	20	-			✓	Dustfall	Metals
WG3537957-3	L2585978-36	SPP1-DUSTFALL-18	DUP	1475552	Aluminum (Al)-Total	0.00107	0.00143	0.00057	mg/dm2.day	-		0.00036	0.00114		✓	Dustfall	Metals
WG3546097-3	L2585978-31	NOP1-DUSTFALL-4	DUP	1481631	Aluminum (Al)-Total	0.0600	0.0127	0.000043	mg/dm2.day	86	20	-		DUP-H	×	Dustfall	Metals
WG3537224-3	L2585978-31	NOP1-DUSTFALL-4	DUP	1475039	Antimony (Sb)-Total	<0.0000085	<0.000010	0.0000085	mg/dm2.day	N/A	20	-			✓	Dustfall	Metals
WG3537957-3	L2585978-36	SPP1-DUSTFALL-18	DUP	1475552	Antimony (Sb)-Total	0.000040	<0.000019	0.000019	mg/dm2.day	N/A	20	-			✓	Dustfall	Metals
WG3546097-3	L2585978-31	NOP1-DUSTFALL-4	DUP	1481631	Antimony (Sb)-Total	<0.0000085	<0.0000043	0.0000085	mg/dm2.day	N/A	20	-			✓	Dustfall	Metals
WG3537224-3	L2585978-31	NOP1-DUSTFALL-4	DUP	1475039	Arsenic (As)-Total	0.0000648	0.0000678	0.0000014	mg/dm2.day	4.5	20	-			✓	Dustfall	Metals
WG3537957-3	L2585978-36	SPP1-DUSTFALL-18	DUP	1475552	Arsenic (As)-Total	<0.000019	<0.000019	0.000019	mg/dm2.day	N/A	20	-			✓	Dustfall	Metals
WG3546097-3	L2585978-31	NOP1-DUSTFALL-4	DUP	1481631	Arsenic (As)-Total	0.0000648	<0.000018	0.0000014	mg/dm2.day	N/A	20	-			✓	Dustfall	Metals
WG3537224-3	L2585978-31	NOP1-DUSTFALL-4	DUP	1475039	Barium (Ba)-Total	0.000304	0.000286	0.00000071	mg/dm2.day	6.2	20	-			✓	Dustfall	Metals
WG3537957-3	L2585978-36	SPP1-DUSTFALL-18	DUP	1475552	Barium (Ba)-Total	0.0000822	0.0000848	0.0000095	mg/dm2.day	3.1	20	-			✓	Dustfall	Metals
WG3546097-3	L2585978-31	NOP1-DUSTFALL-4	DUP	1481631	Barium (Ba)-Total	0.000304	0.0000875	0.00000071	mg/dm2.day	64	20	-		DUP-H	×	Dustfall	Metals
WG3537224-3	L2585978-31	NOP1-DUSTFALL-4	DUP	1475039	Beryllium (Be)-Total	<0.0000071	<0.0000071	0.0000071	mg/dm2.day	N/A	20	-			✓	Dustfall	Metals
WG3537957-3	L2585978-36	SPP1-DUSTFALL-18	DUP	1475552	Beryllium (Be)-Total	<0.000095	<0.000095	0.000095	mg/dm2.day	N/A	20	-			✓	Dustfall	Metals
WG3546097-3	L2585978-31	NOP1-DUSTFALL-4	DUP	1481631	Beryllium (Be)-Total	<0.0000071	<0.0000071	0.0000071	mg/dm2.day	N/A	20	-			✓	Dustfall	Metals
WG3537224-3	L2585978-31	NOP1-DUSTFALL-4	DUP	1475039	Bismuth (Bi)-Total	<0.0000071	<0.0000071	0.0000071	mg/dm2.day	N/A	20	-			✓	Dustfall	Metals
WG3537957-3	L2585978-36	SPP1-DUSTFALL-18	DUP	1475552	Bismuth (Bi)-Total	<0.000095	<0.000095	0.000095	mg/dm2.day	N/A	20	-			✓	Dustfall	Metals
WG3546097-3	L2585978-31	NOP1-DUSTFALL-4	DUP	1481631	Bismuth (Bi)-Total	<0.0000071	<0.0000071	0.0000071	mg/dm2.day	N/A	20	-			✓	Dustfall	Metals
WG3537224-3	L2585978-31	NOP1-DUSTFALL-4	DUP	1475039	Boron (B)-Total	<0.00014	<0.00014	0.00014	mg/dm2.day	N/A	20	-			✓	Dustfall	Metals
WG3537957-3	L2585978-36	SPP1-DUSTFALL-18	DUP	1475552	Boron (B)-Total	<0.0019	<0.0019	0.0019	mg/dm2.day	N/A	20	-			✓	Dustfall	Metals
WG3546097-3	L2585978-31	NOP1-DUSTFALL-4	DUP	1481631	Boron (B)-Total	<0.00014	<0.00014	0.00014	mg/dm2.day	N/A	20	-			✓	Dustfall	Metals
WG3537224-3	L2585978-31	NOP1-DUSTFALL-4	DUP	1475039	Cadmium (Cd)-Total	0.0000106	0.0000110	0.00000071	mg/dm2.day	3.9	20	-			✓	Dustfall	Metals
WG3537957-3	L2585978-36	SPP1-DUSTFALL-18	DUP	1475552	Cadmium (Cd)-Total	<0.0000095	<0.0000095	0.0000095	mg/dm2.day	N/A	20	-			✓	Dustfall	Metals
WG3546097-3	L2585978-31	NOP1-DUSTFALL-4	DUP	1481631	Cadmium (Cd)-Total	0.0000106	0.00000218	0.00000071	mg/dm2.day	-		0.00000133	0.00000142		✓	Dustfall	Metals
WG3537224-3	L2585978-31	NOP1-DUSTFALL-4	DUP	1475039	Calcium (Ca)-Total	0.127	0.124	0.00028	mg/dm2.day	2.5	20	-			✓	Dustfall	Metals
WG3537957-3	L2585978-36	SPP1-DUSTFALL-18	DUP	1475552	Calcium (Ca)-Total	0.0194	0.0231	0.0038	mg/dm2.day	18	20	-			✓	Dustfall	Metals
WG3546097-3	L2585978-31	NOP1-DUSTFALL-4	DUP	1481631	Calcium (Ca)-Total	0.127	0.110	0.00028	mg/dm2.day	7.6	20	-			✓	Dustfall	Metals
WG3537224-3	L2585978-31	NOP1-DUSTFALL-4	DUP	1475039	Chromium (Cr)-Total	0.0000558	0.0000542	0.0000071	mg/dm2.day	3	20	-			✓	Dustfall	Metals
WG3537957-3	L2585978-36	SPP1-DUSTFALL-18	DUP	1475552	Chromium (Cr)-Total	<0.000095	<0.000095	0.000095	mg/dm2.day	N/A	20	-			✓	Dustfall	Metals
WG3546097-3	L2585978-31	NOP1-DUSTFALL-4	DUP	1481631	Chromium (Cr)-Total	0.0000558	0.0000137	0.0000071	mg/dm2.day	N/A	20	-			✓	Dustfall	Metals
WG3537224-3	L2585978-31	NOP1-DUSTFALL-4	DUP	1475039	Cobalt (Co)-Total	0.0000175	0.0000170	0.0000014	mg/dm2.day	2.5	20	-			✓	Dustfall	Metals
WG3537957-3	L2585978-36	SPP1-DUSTFALL-18	DUP	1475552	Cobalt (Co)-Total	<0.000019	<0.000019	0.000019	mg/dm2.day	N/A	20	-			✓	Dustfall	Metals
WG3546097-3	L2585978-31	NOP1-DUSTFALL-4	DUP	1481631	Cobalt (Co)-Total	0.0000175	0.0000028	0.0000014	mg/dm2.day	N/A	20	-		DUP-H	✓	Dustfall	Metals
WG3537224-3	L2585978-31	NOP1-DUSTFALL-4	DUP	1475039	Copper (Cu)-Total	0.000230	0.000223	0.0000071	mg/dm2.day	3.3	20	-			✓	Dustfall	Metals
WG3537957-3	L2585978-36	SPP1-DUSTFALL-18	DUP	1475552	Copper (Cu)-Total	<0.000095	<0.000095	0.000095	mg/dm2.day	N/A	20	-			✓	Dustfall	Metals
WG3546097-3	L2585978-31	NOP1-DUSTFALL-4	DUP	1481631	Copper (Cu)-Total	0.000230	0.0000491	0.0000071	mg/dm2.day	-		0.0000243	0.0000142	DUP-H,J	×	Dustfall	Metals
WG3537224-3	L2585978-31	NOP1-DUSTFALL-4	DUP	1475039	Iron (Fe)-Total	0.0485	0.0479	0.00043	mg/dm2.day	1.3	20	-			✓	Dustfall	Metals
WG3537957-3	L2585978-36	SPP1-DUSTFALL-18	DUP	1475552	Iron (Fe)-Total	<0.0057	<0.0057	0.0057	mg/dm2.day	N/A	20	-			✓	Dustfall	Metals
WG3546097-3	L2585978-31	NOP1-DUSTFALL-4	DUP	1481631	Iron (Fe)-Total	0.0485	0.00868	0.00043	mg/dm2.day	105	20	-		DUP-H	×	Dustfall	Metals
WG3537224-3	L2585978-31	NOP1-DUSTFALL-4	DUP	1475039	Lead (Pb)-Total	0.000147	0.000151	0.00000071	mg/dm2.day	2.3	20	-			✓	Dustfall	Metals
WG3537957-3	L2585978-36	SPP1-DUSTFALL-18	DUP	1475552	Lead (Pb)-Total	<0.0000095	<0.0000095	0.0000095	mg/dm2.day	N/A	20	-			✓	Dustfall	Metals
WG3546097-3	L2585978-31	NOP1-DUSTFALL-4	DUP	1481631	Lead (Pb)-Total	0.000147	0.0000291	0.00000071	mg/dm2.day	93	20	-		DUP-H	×	Dustfall	Metals
WG3537224-3	L2585978-31	NOP1-DUSTFALL-4	DUP	1475039	Lithium (Li)-Total	0.000089	0.000084	0.000071	mg/dm2.day	5.6	20	-			✓	Dustfall	Metals
WG3537957-3	L2585978-36	SPP1-DUSTFALL-18	DUP	1475552	Lithium (Li)-Total	<0.00095	<0.00095	0.00095	mg/dm2.day	N/A	20	-			✓	Dustfall	Metals
WG3546097-3	L2585978-31	NOP1-DUSTFALL-4	DUP	1481631	Lithium (Li)-Total	0.000089	<0.000071	0.000071	mg/dm2.day	N/A	20	-			✓	Dustfall	Metals
WG3537224-3	L2585978-31	NOP1-DUSTFALL-4	DUP	1475039	Magnesium (Mg)-Total	0.0258	0.0256	0.000071	mg/dm2.day	1	20	-			✓	Dustfall	Metals

Duplicates L2585978

Job Reference NEW GOLD RRP
Report To Sarah Flesher, New Gold Inc. Rainy River Project
Date Received 10-May-2021 8:30
Report Date 4-Jun-2021 17:27
Report Version 1

ALS ID	Reference	Client Sample ID	QC Type	QC Lot #	Analyte	Sample Result	Duplicate Result	Detection Limit	Units	RPD	RPD Limit	Diff	Diff Limit	Qual	Eval	Matrix	Class
WG3537957-3	L2585978-36	SPP1-DUSTFALL-18	DUP	1475552	Magnesium (Mg)-Total	0.00370	0.00413	0.00095	mg/dm2.day	11	20	-			✓	Dustfall	Metals
WG3546097-3	L2585978-31	NOP1-DUSTFALL-4	DUP	1481631	Magnesium (Mg)-Total	0.0258	0.00787	0.000071	mg/dm2.day	41	20	-		DUP-H	×	Dustfall	Metals
WG3537224-3	L2585978-31	NOP1-DUSTFALL-4	DUP	1475039	Manganese (Mn)-Total	0.00208	0.00210	0.0000014	mg/dm2.day	0.7	20	-			✓	Dustfall	Metals
WG3537957-3	L2585978-36	SPP1-DUSTFALL-18	DUP	1475552	Manganese (Mn)-Total	0.000258	0.000276	0.000019	mg/dm2.day	7	20	-			✓	Dustfall	Metals
WG3546097-3	L2585978-31	NOP1-DUSTFALL-4	DUP	1481631	Manganese (Mn)-Total	0.00208	0.000472	0.0000014	mg/dm2.day	70	20	-		DUP-H	×	Dustfall	Metals
WG3537224-3	L2585978-31	NOP1-DUSTFALL-4	DUP	1475039	Molybdenum (Mo)-Total	0.00000699	0.00000605	0.00000071	mg/dm2.day	14	20	-			✓	Dustfall	Metals
WG3537957-3	L2585978-36	SPP1-DUSTFALL-18	DUP	1475552	Molybdenum (Mo)-Total	<0.0000095	0.0000187	0.0000095	mg/dm2.day	N/A	20	-			✓	Dustfall	Metals
WG3546097-3	L2585978-31	NOP1-DUSTFALL-4	DUP	1481631	Molybdenum (Mo)-Total	0.00000699	<0.0000036	0.00000071	mg/dm2.day	N/A	20	-			✓	Dustfall	Metals
WG3537224-3	L2585978-31	NOP1-DUSTFALL-4	DUP	1475039	Nickel (Ni)-Total	0.0000426	0.0000426	0.0000071	mg/dm2.day	0.1	20	-			✓	Dustfall	Metals
WG3537957-3	L2585978-36	SPP1-DUSTFALL-18	DUP	1475552	Nickel (Ni)-Total	<0.000095	<0.000095	0.000095	mg/dm2.day	N/A	20	-			✓	Dustfall	Metals
WG3546097-3	L2585978-31	NOP1-DUSTFALL-4	DUP	1481631	Nickel (Ni)-Total	0.0000426	0.0000104	0.0000071	mg/dm2.day	N/A	20	-			✓	Dustfall	Metals
WG3537224-3	L2585978-31	NOP1-DUSTFALL-4	DUP	1475039	Phosphorus (P)-Total	<0.0050	<0.0050	0.0050	mg/dm2.day	N/A	20	-			✓	Dustfall	Metals
WG3537957-3	L2585978-36	SPP1-DUSTFALL-18	DUP	1475552	Phosphorus (P)-Total	<0.0095	<0.0095	0.0095	mg/dm2.day	N/A	20	-			✓	Dustfall	Metals
WG3546097-3	L2585978-31	NOP1-DUSTFALL-4	DUP	1481631	Phosphorus (P)-Total	<0.0050	<0.0028	0.0050	mg/dm2.day	N/A	20	-			✓	Dustfall	Metals
WG3537224-3	L2585978-31	NOP1-DUSTFALL-4	DUP	1475039	Potassium (K)-Total	0.0276	0.0238	0.00071	mg/dm2.day	15	20	-			✓	Dustfall	Metals
WG3537957-3	L2585978-36	SPP1-DUSTFALL-18	DUP	1475552	Potassium (K)-Total	<0.0095	<0.0095	0.0095	mg/dm2.day	N/A	20	-			✓	Dustfall	Metals
WG3546097-3	L2585978-31	NOP1-DUSTFALL-4	DUP	1481631	Potassium (K)-Total	0.0276	0.0122	0.00071	mg/dm2.day	23	20	-		DUP-H	×	Dustfall	Metals
WG3537224-3	L2585978-31	NOP1-DUSTFALL-4	DUP	1475039	Selenium (Se)-Total	<0.000014	<0.000014	0.000014	mg/dm2.day	N/A	20	-			✓	Dustfall	Metals
WG3537957-3	L2585978-36	SPP1-DUSTFALL-18	DUP	1475552	Selenium (Se)-Total	<0.00019	<0.00019	0.00019	mg/dm2.day	N/A	20	-			✓	Dustfall	Metals
WG3546097-3	L2585978-31	NOP1-DUSTFALL-4	DUP	1481631	Selenium (Se)-Total	<0.000014	<0.000014	0.000014	mg/dm2.day	N/A	20	-			✓	Dustfall	Metals
WG3537224-3	L2585978-31	NOP1-DUSTFALL-4	DUP	1475039	Silicon (Si)-Total	0.102	0.106	0.00071	mg/dm2.day	4.4	20	-			✓	Dustfall	Metals
WG3537957-3	L2585978-36	SPP1-DUSTFALL-18	DUP	1475552	Silicon (Si)-Total	<0.0095	<0.0095	0.0095	mg/dm2.day	N/A	20	-			✓	Dustfall	Metals
WG3546097-3	L2585978-31	NOP1-DUSTFALL-4	DUP	1481631	Silicon (Si)-Total	0.102	0.0275	0.00071	mg/dm2.day	79	20	-		DUP-H	×	Dustfall	Metals
WG3537957-3	L2585978-36	SPP1-DUSTFALL-18	DUP	1475552	Silver (Ag)-Total	<0.0000019	<0.0000019	0.0000019	mg/dm2.day	N/A	20	-			✓	Dustfall	Metals
WG3546097-3	L2585978-31	NOP1-DUSTFALL-4	DUP	1481631	Silver (Ag)-Total	0.00000085	0.00000085	0.00000014	mg/dm2.day	0.9	20	-			✓	Dustfall	Metals
WG3537224-3	L2585978-31	NOP1-DUSTFALL-4	DUP	1475039	Sodium (Na)-Total	0.00954	0.00923	0.00071	mg/dm2.day	3.3	20	-			✓	Dustfall	Metals
WG3537957-3	L2585978-36	SPP1-DUSTFALL-18	DUP	1475552	Sodium (Na)-Total	<0.0095	<0.0095	0.0095	mg/dm2.day	N/A	20	-			✓	Dustfall	Metals
WG3546097-3	L2585978-31	NOP1-DUSTFALL-4	DUP	1481631	Sodium (Na)-Total	0.00954	0.00498	0.00071	mg/dm2.day	17	20	-			✓	Dustfall	Metals
WG3537224-3	L2585978-31	NOP1-DUSTFALL-4	DUP	1475039	Strontium (Sr)-Total	0.000317	0.000306	0.0000014	mg/dm2.day	3.7	20	-			✓	Dustfall	Metals
WG3537957-3	L2585978-36	SPP1-DUSTFALL-18	DUP	1475552	Strontium (Sr)-Total	0.000061	0.000067	0.000019	mg/dm2.day	9.2	20	-			✓	Dustfall	Metals
WG3546097-3	L2585978-31	NOP1-DUSTFALL-4	DUP	1481631	Strontium (Sr)-Total	0.000317	0.000196	0.0000014	mg/dm2.day	13	20	-			✓	Dustfall	Metals
WG3537224-3	L2585978-31	NOP1-DUSTFALL-4	DUP	1475039	Thallium (Tl)-Total	<0.0000014	<0.0000014	0.0000014	mg/dm2.day	N/A	20	-			✓	Dustfall	Metals
WG3537957-3	L2585978-36	SPP1-DUSTFALL-18	DUP	1475552	Thallium (Tl)-Total	<0.000019	<0.000019	0.000019	mg/dm2.day	N/A	20	-			✓	Dustfall	Metals
WG3546097-3	L2585978-31	NOP1-DUSTFALL-4	DUP	1481631	Thallium (Tl)-Total	<0.0000014	<0.0000014	0.0000014	mg/dm2.day	N/A	20	-			✓	Dustfall	Metals
WG3537224-3	L2585978-31	NOP1-DUSTFALL-4	DUP	1475039	Tin (Sn)-Total	<0.0000028	<0.0000014	0.0000028	mg/dm2.day	N/A	20	-			✓	Dustfall	Metals
WG3537957-3	L2585978-36	SPP1-DUSTFALL-18	DUP	1475552	Tin (Sn)-Total	<0.000019	<0.000019	0.000019	mg/dm2.day	N/A	20	-			✓	Dustfall	Metals
WG3546097-3	L2585978-31	NOP1-DUSTFALL-4	DUP	1481631	Tin (Sn)-Total	<0.0000028	<0.0000014	0.0000028	mg/dm2.day	N/A	20	-			✓	Dustfall	Metals
WG3537224-3	L2585978-31	NOP1-DUSTFALL-4	DUP	1475039	Titanium (Ti)-Total	0.00101	0.00104	0.00014	mg/dm2.day	3.4	20	-			✓	Dustfall	Metals
WG3537957-3	L2585978-36	SPP1-DUSTFALL-18	DUP	1475552	Titanium (Ti)-Total	<0.0019	<0.0019	0.0019	mg/dm2.day	N/A	20	-			✓	Dustfall	Metals
WG3546097-3	L2585978-31	NOP1-DUSTFALL-4	DUP	1481631	Titanium (Ti)-Total	0.00101	0.00023	0.00014	mg/dm2.day	N/A	20	-			✓	Dustfall	Metals
WG3537224-3	L2585978-31	NOP1-DUSTFALL-4	DUP	1475039	Uranium (U)-Total	0.00000187	0.00000189	0.00000014	mg/dm2.day	0.9	20	-			✓	Dustfall	Metals
WG3537957-3	L2585978-36	SPP1-DUSTFALL-18	DUP	1475552	Uranium (U)-Total	<0.0000019	<0.0000019	0.0000019	mg/dm2.day	N/A	20	-			✓	Dustfall	Metals
WG3546097-3	L2585978-31	NOP1-DUSTFALL-4	DUP	1481631	Uranium (U)-Total	0.00000187	0.00000035	0.00000014	mg/dm2.day	-		0.00000012	0.00000028		✓	Dustfall	Metals
WG3537224-3	L2585978-31	NOP1-DUSTFALL-4	DUP	1475039	Vanadium (V)-Total	0.000071	0.000071	0.000014	mg/dm2.day	0.7	20	-			✓	Dustfall	Metals
WG3537957-3	L2585978-36	SPP1-DUSTFALL-18	DUP	1475552	Vanadium (V)-Total	<0.00019	<0.00019	0.00019	mg/dm2.day	N/A	20	-			✓	Dustfall	Metals
WG3546097-3	L2585978-31	NOP1-DUSTFALL-4	DUP	1481631	Vanadium (V)-Total	0.000071	0.000016	0.000014	mg/dm2.day	N/A	20	-			✓	Dustfall	Metals
WG3537224-3	L2585978-31	NOP1-DUSTFALL-4	DUP	1475039	Zinc (Zn)-Total	0.00286	0.00284	0.000043	mg/dm2.day	0.6	20	-			✓	Dustfall	Metals
WG3537957-3	L2585978-36	SPP1-DUSTFALL-18	DUP	1475552	Zinc (Zn)-Total	<0.00057	0.00115	0.00057	mg/dm2.day	N/A	20	-			✓	Dustfall	Metals
WG3546097-3	L2585978-31	NOP1-DUSTFALL-4	DUP	1481631	Zinc (Zn)-Total	0.00286	0.000504	0.000043	mg/dm2.day	-		0.000319	0.000086		×	Dustfall	Metals

Qualifier Legend

DUP-H	Duplicate results outside ALS DQO, due to sample heterogeneity.
DUP-H,J	Duplicate results outside ALS DQO, due to sample heterogeneity. Duplicate results and limits are expressed in terms of absolute difference.

Evaluation Legend

✓	QC Lot met ALS Data Quality Objectives
×	QC Lot did not meet ALS Data Quality Objectives

Quality Control L2585978

Job Reference NEW GOLD RRP
Report To Sarah Flesher, New Gold Inc. Rainy River Project
Date Received 10-May-2021 8:30
Report Date 4-Jun-2021 17:27
Report Version 1

QC Type	Analyte	QC Lot #	ALS QC ID	Result	Target	Units	%	Limit	Units	Qual	Eval	Matrix	Class
Total Metals (Filter)													
LCS	Arsenic (As)	1473427	WG3535070-2	43.4	45	ug	96.5	80-120	%		✓	Filter	Total Metals
LCS	Cadmium (Cd)	1473427	WG3535070-2	22.2	22.5	ug	98.6	80-120	%		✓	Filter	Total Metals
LCS	Chromium (Cr)	1473427	WG3535070-2	45.5	45	ug	101.0	80-120	%		✓	Filter	Total Metals
LCS	Cobalt (Co)	1473427	WG3535070-2	45.5	45	ug	101.0	80-120	%		✓	Filter	Total Metals
LCS	Copper (Cu)	1473427	WG3535070-2	46.4	45	ug	103.0	80-120	%		✓	Filter	Total Metals
LCS	Iron (Fe)	1473427	WG3535070-2	223	225	ug	99.0	80-120	%		✓	Filter	Total Metals
LCS	Lead (Pb)	1473427	WG3535070-2	45.9	45	ug	102.0	80-120	%		✓	Filter	Total Metals
LCS	Manganese (Mn)	1473427	WG3535070-2	43.4	45	ug	96.5	80-120	%		✓	Filter	Total Metals
LCS	Nickel (Ni)	1473427	WG3535070-2	44.5	45	ug	98.8	80-120	%		✓	Filter	Total Metals
LCS	Selenium (Se)	1473427	WG3535070-2	44.9	45	ug	99.7	80-120	%		✓	Filter	Total Metals
LCS	Vanadium (V)	1473427	WG3535070-2	46.8	45	ug	104.0	80-120	%		✓	Filter	Total Metals
LCS	Zinc (Zn)	1473427	WG3535070-2	90.9	90	ug	101.0	80-120	%		✓	Filter	Total Metals
Particulates (Filter)													
MB	Total particulate	1473131	WG3534646-1	<100		ug	-	<100	ug		✓	Filter	Particulates
MB	Total particulate	1479497	WG3543195-1	<15		ug	-	<15	ug		✓	Filter	Particulates
MB	Total particulate	1479497	WG3543195-3	<15		ug	-	<15	ug		✓	Filter	Particulates
Total Metals (Filter)													
MB	Arsenic (As)	1473427	WG3535070-1	<3.0		ug	-	<3.0	ug		✓	Filter	Total Metals
MB	Cadmium (Cd)	1473427	WG3535070-1	<0.027		ug	-	<0.027	ug		✓	Filter	Total Metals
MB	Chromium (Cr)	1473427	WG3535070-1	<3.4		ug	-	<3.4	ug		✓	Filter	Total Metals
MB	Cobalt (Co)	1473427	WG3535070-1	<0.030		ug	-	<0.030	ug		✓	Filter	Total Metals
MB	Copper (Cu)	1473427	WG3535070-1	<1.0		ug	-	<1.0	ug		✓	Filter	Total Metals
MB	Iron (Fe)	1473427	WG3535070-1	<12		ug	-	<12	ug		✓	Filter	Total Metals
MB	Lead (Pb)	1473427	WG3535070-1	<0.12		ug	-	<0.12	ug		✓	Filter	Total Metals
MB	Manganese (Mn)	1473427	WG3535070-1	<0.45		ug	-	<0.45	ug		✓	Filter	Total Metals
MB	Nickel (Ni)	1473427	WG3535070-1	<0.25		ug	-	<0.25	ug		✓	Filter	Total Metals
MB	Selenium (Se)	1473427	WG3535070-1	<1.3		ug	-	<1.3	ug		✓	Filter	Total Metals
MB	Vanadium (V)	1473427	WG3535070-1	<5.0		ug	-	<10.0	ug		✓	Filter	Total Metals
MB	Zinc (Zn)	1473427	WG3535070-1	<4.5		ug	-	<4.5	ug		✓	Filter	Total Metals
MS	Arsenic (As)	1473427	SOUTH-TSP-356	46.4	47.1	ug	98.3	75-125	%		✓	Filter	Total Metals
MS	Cadmium (Cd)	1473427	SOUTH-TSP-356	23.1	22.8	ug	101.4	75-125	%		✓	Filter	Total Metals
MS	Chromium (Cr)	1473427	SOUTH-TSP-356	58.1	54.7	ug	107.5	75-125	%		✓	Filter	Total Metals
MS	Cobalt (Co)	1473427	SOUTH-TSP-356	47.3	46.9	ug	100.8	75-125	%		✓	Filter	Total Metals
MS	Copper (Cu)	1473427	SOUTH-TSP-356	153	150	ug	N/A	-	%	MS-B		Filter	Total Metals
MS	Iron (Fe)	1473427	SOUTH-TSP-356	3230	2930	ug	N/A	-	%	MS-B		Filter	Total Metals
MS	Lead (Pb)	1473427	SOUTH-TSP-356	52.2	51.3	ug	101.9	75-125	%		✓	Filter	Total Metals
MS	Manganese (Mn)	1473427	SOUTH-TSP-356	145	131	ug	N/A	-	%	MS-B		Filter	Total Metals
MS	Nickel (Ni)	1473427	SOUTH-TSP-356	50.4	50.8	ug	99.2	75-125	%		✓	Filter	Total Metals
MS	Selenium (Se)	1473427	SOUTH-TSP-356	47.7	45.2	ug	105.5	75-125	%		✓	Filter	Total Metals
MS	Vanadium (V)	1473427	SOUTH-TSP-356	52.7	49.2	ug	107.7	75-125	%		✓	Filter	Total Metals
MS	Zinc (Zn)	1473427	SOUTH-TSP-356	158	158	ug	101.0	75-125	%		✓	Filter	Total Metals
Metals (Dustfall)													
LCS	Aluminum (Al)-Total	1475039	WG3537224-2	0.0557	0.0524	mg/dm2.day	106.2	80-120	%		✓	Dustfall	Metals
LCS	Aluminum (Al)-Total	1475552	WG3537957-2	0.0531	0.0524	mg/dm2.day	101.4	80-120	%		✓	Dustfall	Metals
LCS	Antimony (Sb)-Total	1475039	WG3537224-2	0.0282	0.0262	mg/dm2.day	107.5	80-120	%		✓	Dustfall	Metals
LCS	Antimony (Sb)-Total	1475552	WG3537957-2	0.0270	0.0262	mg/dm2.day	103.0	80-120	%		✓	Dustfall	Metals
LCS	Arsenic (As)-Total	1475039	WG3537224-2	0.0267	0.0262	mg/dm2.day	101.8	80-120	%		✓	Dustfall	Metals
LCS	Arsenic (As)-Total	1475552	WG3537957-2	0.0261	0.0262	mg/dm2.day	99.5	80-120	%		✓	Dustfall	Metals
LCS	Barium (Ba)-Total	1475039	WG3537224-2	0.00701	0.00655	mg/dm2.day	107.1	80-120	%		✓	Dustfall	Metals
LCS	Barium (Ba)-Total	1475552	WG3537957-2	0.00673	0.00655	mg/dm2.day	102.7	80-120	%		✓	Dustfall	Metals
LCS	Beryllium (Be)-Total	1475039	WG3537224-2	0.00269	0.00262	mg/dm2.day	102.5	80-120	%		✓	Dustfall	Metals
LCS	Beryllium (Be)-Total	1475552	WG3537957-2	0.00252	0.00262	mg/dm2.day	96.1	80-120	%		✓	Dustfall	Metals
LCS	Bismuth (Bi)-Total	1475039	WG3537224-2	0.0281	0.0262	mg/dm2.day	107.3	80-120	%		✓	Dustfall	Metals
LCS	Bismuth (Bi)-Total	1475552	WG3537957-2	0.0260	0.0262	mg/dm2.day	99.1	80-120	%		✓	Dustfall	Metals
LCS	Boron (B)-Total	1475039	WG3537224-2	0.0268	0.0262	mg/dm2.day	102.4	80-120	%		✓	Dustfall	Metals
LCS	Boron (B)-Total	1475552	WG3537957-2	0.0260	0.0262	mg/dm2.day	99.3	80-120	%		✓	Dustfall	Metals
LCS	Cadmium (Cd)-Total	1475039	WG3537224-2	0.00263	0.00262	mg/dm2.day	100.6	80-120	%		✓	Dustfall	Metals
LCS	Cadmium (Cd)-Total	1475552	WG3537957-2	0.00257	0.00262	mg/dm2.day	98.1	80-120	%		✓	Dustfall	Metals
LCS	Calcium (Ca)-Total	1475039	WG3537224-2	1.34	1.31	mg/dm2.day	102.0	80-120	%		✓	Dustfall	Metals
LCS	Calcium (Ca)-Total	1475552	WG3537957-2	1.28	1.31	mg/dm2.day	97.7	80-120	%		✓	Dustfall	Metals
LCS	Chromium (Cr)-Total	1475039	WG3537224-2	0.00674	0.00655	mg/dm2.day	102.9	80-120	%		✓	Dustfall	Metals
LCS	Chromium (Cr)-Total	1475552	WG3537957-2	0.00642	0.00655	mg/dm2.day	98.0	80-120	%		✓	Dustfall	Metals
LCS	Cobalt (Co)-Total	1475039	WG3537224-2	0.00684	0.00655	mg/dm2.day	104.4	80-120	%		✓	Dustfall	Metals
LCS	Cobalt (Co)-Total	1475552	WG3537957-2	0.00650	0.00655	mg/dm2.day	99.2	80-120	%		✓	Dustfall	Metals
LCS	Copper (Cu)-Total	1475039	WG3537224-2	0.00677	0.00655	mg/dm2.day	103.4	80-120	%		✓	Dustfall	Metals
LCS	Copper (Cu)-Total	1475552	WG3537957-2	0.00640	0.00655	mg/dm2.day	97.7	80-120	%		✓	Dustfall	Metals
LCS	Iron (Fe)-Total	1475039	WG3537224-2	0.0281	0.0262	mg/dm2.day	107.4	80-120	%		✓	Dustfall	Metals
LCS	Iron (Fe)-Total	1475552	WG3537957-2	0.0266	0.0262	mg/dm2.day	101.4	80-120	%		✓	Dustfall	Metals
LCS	Lead (Pb)-Total	1475039	WG3537224-2	0.0137	0.0131	mg/dm2.day	104.4	80-120	%		✓	Dustfall	Metals
LCS	Lead (Pb)-Total	1475552	WG3537957-2	0.0130	0.0131	mg/dm2.day	99.5	80-120	%		✓	Dustfall	Metals
LCS	Lithium (Li)-Total	1475039	WG3537224-2	0.00653	0.00655	mg/dm2.day	99.7	80-120	%		✓	Dustfall	Metals
LCS	Lithium (Li)-Total	1475552	WG3537957-2	0.00621	0.00655	mg/dm2.day	94.8	80-120	%		✓	Dustfall	Metals

Quality Control L2585978

Job Reference NEW GOLD RRP
Report To Sarah Flesher, New Gold Inc. Rainy River Project
Date Received 10-May-2021 8:30
Report Date 4-Jun-2021 17:27
Report Version 1

QC Type	Analyte	QC Lot #	ALS QC ID	Result	Target	Units	%	Limit	Units	Qual	Eval	Matrix	Class
LCS	Magnesium (Mg)-Total	1475039	WG3537224-2	1.37	1.31	mg/dm2.day	104.8	80-120	%		✓	Dustfall	Metals
LCS	Magnesium (Mg)-Total	1475552	WG3537957-2	1.30	1.31	mg/dm2.day	99.0	80-120	%		✓	Dustfall	Metals
LCS	Manganese (Mn)-Total	1475039	WG3537224-2	0.00687	0.00655	mg/dm2.day	105.0	80-120	%		✓	Dustfall	Metals
LCS	Manganese (Mn)-Total	1475552	WG3537957-2	0.00650	0.00655	mg/dm2.day	99.2	80-120	%		✓	Dustfall	Metals
LCS	Molybdenum (Mo)-Total	1475039	WG3537224-2	0.00700	0.00655	mg/dm2.day	106.8	80-120	%		✓	Dustfall	Metals
LCS	Molybdenum (Mo)-Total	1475552	WG3537957-2	0.00666	0.00655	mg/dm2.day	101.6	80-120	%		✓	Dustfall	Metals
LCS	Nickel (Ni)-Total	1475039	WG3537224-2	0.0135	0.0131	mg/dm2.day	103.1	80-120	%		✓	Dustfall	Metals
LCS	Nickel (Ni)-Total	1475552	WG3537957-2	0.0128	0.0131	mg/dm2.day	98.0	80-120	%		✓	Dustfall	Metals
LCS	Phosphorus (P)-Total	1475039	WG3537224-2	0.290	0.262	mg/dm2.day	110.9	80-120	%		✓	Dustfall	Metals
LCS	Phosphorus (P)-Total	1475552	WG3537957-2	0.295	0.262	mg/dm2.day	112.8	80-120	%		✓	Dustfall	Metals
LCS	Potassium (K)-Total	1475039	WG3537224-2	1.43	1.31	mg/dm2.day	109.0	80-120	%		✓	Dustfall	Metals
LCS	Potassium (K)-Total	1475552	WG3537957-2	1.36	1.31	mg/dm2.day	103.9	80-120	%		✓	Dustfall	Metals
LCS	Selenium (Se)-Total	1475039	WG3537224-2	0.0284	0.0262	mg/dm2.day	108.2	80-120	%		✓	Dustfall	Metals
LCS	Selenium (Se)-Total	1475552	WG3537957-2	0.0271	0.0262	mg/dm2.day	103.3	80-120	%		✓	Dustfall	Metals
LCS	Silicon (Si)-Total	1475039	WG3537224-2	0.259	0.262	mg/dm2.day	98.8	80-120	%		✓	Dustfall	Metals
LCS	Silicon (Si)-Total	1475552	WG3537957-2	0.245	0.262	mg/dm2.day	93.7	80-120	%		✓	Dustfall	Metals
LCS	Silver (Ag)-Total	1475039	WG3537224-2	0.00274	0.00262	mg/dm2.day	104.6	80-120	%		✓	Dustfall	Metals
LCS	Silver (Ag)-Total	1475552	WG3537957-2	0.00261	0.00262	mg/dm2.day	99.7	80-120	%		✓	Dustfall	Metals
LCS	Silver (Ag)-Total	1481631	WG3546097-2	0.00248	0.00262	mg/dm2.day	94.8	80-120	%		✓	Dustfall	Metals
LCS	Sodium (Na)-Total	1475039	WG3537224-2	1.42	1.31	mg/dm2.day	108.4	80-120	%		✓	Dustfall	Metals
LCS	Sodium (Na)-Total	1475552	WG3537957-2	1.35	1.31	mg/dm2.day	103.0	80-120	%		✓	Dustfall	Metals
LCS	Strontium (Sr)-Total	1475039	WG3537224-2	0.00699	0.00655	mg/dm2.day	106.7	80-120	%		✓	Dustfall	Metals
LCS	Strontium (Sr)-Total	1475552	WG3537957-2	0.00657	0.00655	mg/dm2.day	100.3	80-120	%		✓	Dustfall	Metals
LCS	Thallium (Tl)-Total	1475039	WG3537224-2	0.0280	0.0262	mg/dm2.day	106.7	80-120	%		✓	Dustfall	Metals
LCS	Thallium (Tl)-Total	1475552	WG3537957-2	0.0247	0.0262	mg/dm2.day	94.3	80-120	%		✓	Dustfall	Metals
LCS	Tin (Sn)-Total	1475039	WG3537224-2	0.0133	0.0131	mg/dm2.day	101.6	80-120	%		✓	Dustfall	Metals
LCS	Tin (Sn)-Total	1475552	WG3537957-2	0.0131	0.0131	mg/dm2.day	100.3	80-120	%		✓	Dustfall	Metals
LCS	Titanium (Ti)-Total	1475039	WG3537224-2	0.00654	0.00655	mg/dm2.day	99.8	80-120	%		✓	Dustfall	Metals
LCS	Titanium (Ti)-Total	1475552	WG3537957-2	0.00640	0.00655	mg/dm2.day	97.7	80-120	%		✓	Dustfall	Metals
LCS	Uranium (U)-Total	1475039	WG3537224-2	0.000132	0.000131	mg/dm2.day	101.1	80-120	%		✓	Dustfall	Metals
LCS	Uranium (U)-Total	1475552	WG3537957-2	0.000128	0.000131	mg/dm2.day	97.6	80-120	%		✓	Dustfall	Metals
LCS	Vanadium (V)-Total	1475039	WG3537224-2	0.0138	0.0131	mg/dm2.day	105.1	80-120	%		✓	Dustfall	Metals
LCS	Vanadium (V)-Total	1475552	WG3537957-2	0.0131	0.0131	mg/dm2.day	100.3	80-120	%		✓	Dustfall	Metals
LCS	Zinc (Zn)-Total	1475039	WG3537224-2	0.0143	0.0131	mg/dm2.day	109.1	80-120	%		✓	Dustfall	Metals
LCS	Zinc (Zn)-Total	1475552	WG3537957-2	0.0133	0.0131	mg/dm2.day	101.6	80-120	%		✓	Dustfall	Metals
Particulates (Dustfall)													
MB	Fixed Dustfall	1478236	WG3541528-1	<0.10		mg/dm2.day	-	<0.10	mg/dm2.day		✓	Dustfall	Particulates
MB	Volatile Dustfall	1478236	WG3541528-1	<0.10		mg/dm2.day	-	<0.10	mg/dm2.day		✓	Dustfall	Particulates
MB	Total Dustfall	1478236	WG3541528-1	<0.10		mg/dm2.day	-	<0.10	mg/dm2.day		✓	Dustfall	Particulates
MB	Fixed Insoluble Dustfall	1478236	WG3541528-1	<0.10		mg/dm2.day	-	<0.10	mg/dm2.day		✓	Dustfall	Particulates
MB	Volatile Insoluble Dustfall	1478236	WG3541528-1	<0.10		mg/dm2.day	-	<0.10	mg/dm2.day		✓	Dustfall	Particulates
MB	Total Insoluble Dustfall	1478236	WG3541528-1	<0.10		mg/dm2.day	-	<0.10	mg/dm2.day		✓	Dustfall	Particulates
MB	Fixed Soluble Dustfall	1478236	WG3541528-1	<0.10		mg/dm2.day	-	<0.10	mg/dm2.day		✓	Dustfall	Particulates
MB	Volatile Soluble Dustfall	1478236	WG3541528-1	<0.10		mg/dm2.day	-	<0.10	mg/dm2.day		✓	Dustfall	Particulates
MB	Total Soluble Dustfall	1478236	WG3541528-1	<0.10		mg/dm2.day	-	<0.10	mg/dm2.day		✓	Dustfall	Particulates
Metals (Dustfall)													
MB	Aluminum (Al)-Total	1475039	WG3537224-1	<0.000079		mg/dm2.day	-	<0.000079	mg/dm2.day		✓	Dustfall	Metals
MB	Aluminum (Al)-Total	1475552	WG3537957-1	<0.000079		mg/dm2.day	-	<0.000079	mg/dm2.day		✓	Dustfall	Metals
MB	Antimony (Sb)-Total	1475039	WG3537224-1	0.0000035		mg/dm2.day	-	<0.0000026	mg/dm2.day	MB-LOR	×	Dustfall	Metals
MB	Antimony (Sb)-Total	1475552	WG3537957-1	<0.0000026		mg/dm2.day	-	<0.0000026	mg/dm2.day		✓	Dustfall	Metals
MB	Arsenic (As)-Total	1475039	WG3537224-1	<0.0000026		mg/dm2.day	-	<0.0000026	mg/dm2.day		✓	Dustfall	Metals
MB	Arsenic (As)-Total	1475552	WG3537957-1	<0.0000026		mg/dm2.day	-	<0.0000026	mg/dm2.day		✓	Dustfall	Metals
MB	Barium (Ba)-Total	1475039	WG3537224-1	0.0000018		mg/dm2.day	-	<0.0000013	mg/dm2.day	B	×	Dustfall	Metals
MB	Barium (Ba)-Total	1475552	WG3537957-1	0.0000020		mg/dm2.day	-	<0.0000013	mg/dm2.day	B	×	Dustfall	Metals
MB	Beryllium (Be)-Total	1475039	WG3537224-1	<0.000013		mg/dm2.day	-	<0.000013	mg/dm2.day		✓	Dustfall	Metals
MB	Beryllium (Be)-Total	1475552	WG3537957-1	<0.000013		mg/dm2.day	-	<0.000013	mg/dm2.day		✓	Dustfall	Metals
MB	Bismuth (Bi)-Total	1475039	WG3537224-1	<0.000013		mg/dm2.day	-	<0.000013	mg/dm2.day		✓	Dustfall	Metals
MB	Bismuth (Bi)-Total	1475552	WG3537957-1	<0.000013		mg/dm2.day	-	<0.000013	mg/dm2.day		✓	Dustfall	Metals
MB	Boron (B)-Total	1475039	WG3537224-1	<0.00026		mg/dm2.day	-	<0.00026	mg/dm2.day		✓	Dustfall	Metals
MB	Boron (B)-Total	1475552	WG3537957-1	<0.00026		mg/dm2.day	-	<0.00026	mg/dm2.day		✓	Dustfall	Metals
MB	Cadmium (Cd)-Total	1475039	WG3537224-1	<0.0000013		mg/dm2.day	-	<0.0000013	mg/dm2.day		✓	Dustfall	Metals
MB	Cadmium (Cd)-Total	1475552	WG3537957-1	<0.0000013		mg/dm2.day	-	<0.0000013	mg/dm2.day		✓	Dustfall	Metals
MB	Calcium (Ca)-Total	1475039	WG3537224-1	<0.00052		mg/dm2.day	-	<0.00052	mg/dm2.day		✓	Dustfall	Metals
MB	Calcium (Ca)-Total	1475552	WG3537957-1	0.00073		mg/dm2.day	-	<0.00052	mg/dm2.day	B	×	Dustfall	Metals
MB	Chromium (Cr)-Total	1475039	WG3537224-1	<0.000013		mg/dm2.day	-	<0.000013	mg/dm2.day		✓	Dustfall	Metals
MB	Chromium (Cr)-Total	1475552	WG3537957-1	<0.000013		mg/dm2.day	-	<0.000013	mg/dm2.day		✓	Dustfall	Metals
MB	Cobalt (Co)-Total	1475039	WG3537224-1	<0.0000026		mg/dm2.day	-	<0.0000026	mg/dm2.day		✓	Dustfall	Metals
MB	Cobalt (Co)-Total	1475552	WG3537957-1	<0.0000026		mg/dm2.day	-	<0.0000026	mg/dm2.day		✓	Dustfall	Metals
MB	Copper (Cu)-Total	1475039	WG3537224-1	<0.000013		mg/dm2.day	-	<0.000013	mg/dm2.day		✓	Dustfall	Metals
MB	Copper (Cu)-Total	1475552	WG3537957-1	0.000019		mg/dm2.day	-	<0.000013	mg/dm2.day	MB-LOR	×	Dustfall	Metals
MB	Iron (Fe)-Total	1475039	WG3537224-1	<0.00079		mg/dm2.day	-	<0.00079	mg/dm2.day		✓	Dustfall	Metals
MB	Iron (Fe)-Total	1475552	WG3537957-1	<0.00079		mg/dm2.day	-	<0.00079	mg/dm2.day		✓	Dustfall	Metals
MB	Lead (Pb)-Total	1475039	WG3537224-1	<0.0000013		mg/dm2.day	-	<0.0000013	mg/dm2.day		✓	Dustfall	Metals
MB	Lead (Pb)-Total	1475552	WG3537957-1	0.0000020		mg/dm2.day	-	<0.0000013	mg/dm2.day	MB-LOR	×	Dustfall	Metals
MB	Lithium (Li)-Total	1475039	WG3537224-1	<0.00013		mg/dm2.day	-	<0.00013	mg/dm2.day		✓	Dustfall	Metals

Quality Control L2585978

Job Reference NEW GOLD RRP
Report To Sarah Flesher, New Gold Inc. Rainy River Project
Date Received 10-May-2021 8:30
Report Date 4-Jun-2021 17:27
Report Version 1

QC Type	Analyte	QC Lot #	ALS QC ID	Result	Target	Units	%	Limit	Units	Qual	Eval	Matrix	Class
MB	Lithium (Li)-Total	1475552	WG3537957-1	<0.00013		mg/dm2.day	-	<0.00013	mg/dm2.day		✓	Dustfall	Metals
MB	Magnesium (Mg)-Total	1475039	WG3537224-1	<0.00013		mg/dm2.day	-	<0.00013	mg/dm2.day		✓	Dustfall	Metals
MB	Magnesium (Mg)-Total	1475552	WG3537957-1	<0.00013		mg/dm2.day	-	<0.00013	mg/dm2.day		✓	Dustfall	Metals
MB	Manganese (Mn)-Total	1475039	WG3537224-1	<0.0000026		mg/dm2.day	-	<0.0000026	mg/dm2.day		✓	Dustfall	Metals
MB	Manganese (Mn)-Total	1475552	WG3537957-1	<0.0000026		mg/dm2.day	-	<0.0000026	mg/dm2.day		✓	Dustfall	Metals
MB	Molybdenum (Mo)-Total	1475039	WG3537224-1	<0.0000013		mg/dm2.day	-	<0.0000013	mg/dm2.day		✓	Dustfall	Metals
MB	Molybdenum (Mo)-Total	1475552	WG3537957-1	0.0000036		mg/dm2.day	-	<0.0000013	mg/dm2.day	MB-LOR	✗	Dustfall	Metals
MB	Nickel (Ni)-Total	1475039	WG3537224-1	<0.000013		mg/dm2.day	-	<0.000013	mg/dm2.day		✓	Dustfall	Metals
MB	Nickel (Ni)-Total	1475552	WG3537957-1	<0.000013		mg/dm2.day	-	<0.000013	mg/dm2.day		✓	Dustfall	Metals
MB	Phosphorus (P)-Total	1475039	WG3537224-1	0.0027		mg/dm2.day	-	<0.0013	mg/dm2.day	MB-LOR	✗	Dustfall	Metals
MB	Phosphorus (P)-Total	1475552	WG3537957-1	<0.0013		mg/dm2.day	-	<0.0013	mg/dm2.day		✓	Dustfall	Metals
MB	Potassium (K)-Total	1475039	WG3537224-1	<0.0013		mg/dm2.day	-	<0.0013	mg/dm2.day		✓	Dustfall	Metals
MB	Potassium (K)-Total	1475552	WG3537957-1	<0.0013		mg/dm2.day	-	<0.0013	mg/dm2.day		✓	Dustfall	Metals
MB	Selenium (Se)-Total	1475039	WG3537224-1	<0.000026		mg/dm2.day	-	<0.000026	mg/dm2.day		✓	Dustfall	Metals
MB	Selenium (Se)-Total	1475552	WG3537957-1	<0.000026		mg/dm2.day	-	<0.000026	mg/dm2.day		✓	Dustfall	Metals
MB	Silicon (Si)-Total	1475039	WG3537224-1	<0.0013		mg/dm2.day	-	<0.0013	mg/dm2.day		✓	Dustfall	Metals
MB	Silicon (Si)-Total	1475552	WG3537957-1	<0.0013		mg/dm2.day	-	<0.0013	mg/dm2.day		✓	Dustfall	Metals
MB	Silver (Ag)-Total	1475039	WG3537224-1	<0.00000026		mg/dm2.day	-	<0.00000026	mg/dm2.day		✓	Dustfall	Metals
MB	Silver (Ag)-Total	1475552	WG3537957-1	<0.00000026		mg/dm2.day	-	<0.00000026	mg/dm2.day		✓	Dustfall	Metals
MB	Silver (Ag)-Total	1481631	WG3546097-1	<0.0000010		mg/dm2.day	-	<0.0000010	mg/dm2.day		✓	Dustfall	Metals
MB	Sodium (Na)-Total	1475039	WG3537224-1	<0.0013		mg/dm2.day	-	<0.0013	mg/dm2.day		✓	Dustfall	Metals
MB	Sodium (Na)-Total	1475552	WG3537957-1	<0.0013		mg/dm2.day	-	<0.0013	mg/dm2.day		✓	Dustfall	Metals
MB	Strontium (Sr)-Total	1475039	WG3537224-1	<0.0000026		mg/dm2.day	-	<0.0000026	mg/dm2.day		✓	Dustfall	Metals
MB	Strontium (Sr)-Total	1475552	WG3537957-1	<0.0000026		mg/dm2.day	-	<0.0000026	mg/dm2.day		✓	Dustfall	Metals
MB	Thallium (Tl)-Total	1475039	WG3537224-1	<0.0000026		mg/dm2.day	-	<0.0000026	mg/dm2.day		✓	Dustfall	Metals
MB	Thallium (Tl)-Total	1475552	WG3537957-1	<0.0000026		mg/dm2.day	-	<0.0000026	mg/dm2.day		✓	Dustfall	Metals
MB	Tin (Sn)-Total	1475039	WG3537224-1	0.0000126		mg/dm2.day	-	<0.0000026	mg/dm2.day	MB-LOR	✗	Dustfall	Metals
MB	Tin (Sn)-Total	1475552	WG3537957-1	<0.0000026		mg/dm2.day	-	<0.0000026	mg/dm2.day		✓	Dustfall	Metals
MB	Titanium (Ti)-Total	1475039	WG3537224-1	<0.00026		mg/dm2.day	-	<0.00026	mg/dm2.day		✓	Dustfall	Metals
MB	Titanium (Ti)-Total	1475552	WG3537957-1	<0.00026		mg/dm2.day	-	<0.00026	mg/dm2.day		✓	Dustfall	Metals
MB	Uranium (U)-Total	1475039	WG3537224-1	<0.00000026		mg/dm2.day	-	<0.00000026	mg/dm2.day		✓	Dustfall	Metals
MB	Uranium (U)-Total	1475552	WG3537957-1	<0.00000026		mg/dm2.day	-	<0.00000026	mg/dm2.day		✓	Dustfall	Metals
MB	Vanadium (V)-Total	1475039	WG3537224-1	<0.000026		mg/dm2.day	-	<0.000026	mg/dm2.day		✓	Dustfall	Metals
MB	Vanadium (V)-Total	1475552	WG3537957-1	<0.000026		mg/dm2.day	-	<0.000026	mg/dm2.day		✓	Dustfall	Metals
MB	Zinc (Zn)-Total	1475039	WG3537224-1	<0.000079		mg/dm2.day	-	<0.000079	mg/dm2.day		✓	Dustfall	Metals
MB	Zinc (Zn)-Total	1475552	WG3537957-1	<0.000079		mg/dm2.day	-	<0.000079	mg/dm2.day		✓	Dustfall	Metals

Qualifier Legend

B	Method Blank exceeds ALS DQO. Associated sample results which are < Limit of Reporting or > 5 times blank level are considered reliable.
MB-LOR	Method Blank exceeds ALS DQO. Limits of Reporting have been adjusted for samples with positive hits below 5x blank level.
MS-B	Matrix Spike recovery could not be accurately calculated due to high analyte background in sample.

Evaluation Legend

✓	QC Lot met ALS Data Quality Objectives
✗	QC Lot did not meet ALS Data Quality Objectives

Methodology L2585978

Job Reference NEW GOLD RRP
Report To Sarah Flesher, New Gold Inc. Rainy River Project

Date Received 10-May-2021 8:30
Report Date 4-Jun-2021 17:27
Report Version 1

ALS Test Code	ALS Test Description	Lab Location	Matrix	Method Reference	Methodology Description
Particulates (Dustfall)					
DUSTFALLS-ALL-DM2-VA	Dustfalls-Total, Soluble, Insoluble +FV	Vancouver	Dustfall	BC LAB MANUAL - PARTICULATE	This analysis is carried out using procedures modified from British Columbia Environmental Manual "Particulate." Particulates or "Dustfalls" are determined gravimetrically. Total Insoluble and Soluble Dustfalls are determined by filtering a sample through a 0.45 um membrane filter and drying the filter and filtrate at 104 C, followed by ignition at 550 C. The remaining residue after 550 C represents the fixed portion and the weight lost on ignition represents the volatile portion. The sum of all fixed and volatile portions on both Insoluble and Soluble portions represents Total Dustfalls.
PART-HIVOL-GRAV-BU	Particulate on High Volume Filter	Burlington	Filter	USEPA IO3.1	
PART-M212 F-GRAV-BU	PM via Gravimetric Analysis	Burlington	Filter	EPA QA Guidance Document 2.12	The particulate matter collected onto tare-weighed 47mm Teflon Disc filter media is desiccated then brought to a constant weight on an analytical balance. Results are presented in ug (per filter). An air volume can be included to allow for reporting in ug/m3.
Particulates (Filter)					
DUSTFALLS-ALL-DM2-VA	Dustfalls-Total, Soluble, Insoluble +FV	Vancouver	Dustfall	BC LAB MANUAL - PARTICULATE	This analysis is carried out using procedures modified from British Columbia Environmental Manual "Particulate." Particulates or "Dustfalls" are determined gravimetrically. Total Insoluble and Soluble Dustfalls are determined by filtering a sample through a 0.45 um membrane filter and drying the filter and filtrate at 104 C, followed by ignition at 550 C. The remaining residue after 550 C represents the fixed portion and the weight lost on ignition represents the volatile portion. The sum of all fixed and volatile portions on both Insoluble and Soluble portions represents Total Dustfalls.
PART-HIVOL-GRAV-BU	Particulate on High Volume Filter	Burlington	Filter	USEPA IO3.1	
PART-M212 F-GRAV-BU	PM via Gravimetric Analysis	Burlington	Filter	EPA QA Guidance Document 2.12	The particulate matter collected onto tare-weighed 47mm Teflon Disc filter media is desiccated then brought to a constant weight on an analytical balance. Results are presented in ug (per filter). An air volume can be included to allow for reporting in ug/m3.
Metals (Dustfall)					
MET-DUST(DM2)-MS-VA	Total Metals in Dustfalls by ICPMS	Vancouver	Dustfall	EPA 6020A	This analysis is carried out using procedures adapted from "Standard Methods for the Examination of Water and Wastewater" published by the American Public Health Association, and with procedures adapted from "Test Methods for Evaluating Solid Waste" SW-846 published by the United States Environmental Protection Agency (EPA). Instrumental analysis is by inductively coupled plasma - mass spectrometry (EPA Method 6020A).
Total Metals (Filter)					
MET-IO3.5-MS-BU	Metals on High Volume Filter by ICPMS	Burlington	Filter	IO3.5	After weighing (if required), hivol filters are sub-sampled and leached with nitric acid to extract available metal analytes. After dilution, the extracts are submitted to the ICPMS instrument for analysis.

Detection Limits L2585978

Job Reference NEW GOLD RRP
Report To Sarah Flesher, New Gold Inc. Rainy River Project
Date Received 10-May-2021 8:30
Report Date 4-Jun-2021 17:27
Report Version 1

Client Sample ID		SOUTH-TSP-356	SOUTH-TSP-357	SOUTH-TSP-358	SOUTH-TSP-359	SOUTH-TSP-360	NORTH-TSP-356	NORTH-TSP-357	NORTH-TSP-358	NORTH-TSP-359	NORTH-TSP-360	NORTHWEST-TSP-356	NORTHWEST-TSP-357	NORTHWEST-TSP-358
Date Sampled		4-Apr-2021	10-Apr-2021	16-Apr-2021	22-Apr-2021	28-Apr-2021	4-Apr-2021	10-Apr-2021	16-Apr-2021	22-Apr-2021	28-Apr-2021	4-Apr-2021	10-Apr-2021	16-Apr-2021
Time Sampled		0:00	0:00	0:00	0:00	0:00	0:00	0:00	0:00	0:00	0:00	0:00	0:00	0:00
ALS Sample ID		L2585978-1	L2585978-2	L2585978-3	L2585978-4	L2585978-5	L2585978-6	L2585978-7	L2585978-8	L2585978-9	L2585978-10	L2585978-11	L2585978-12	L2585978-13
Parameter	Units	Filter	Filter	Filter	Filter	Filter	Filter	Filter	Filter	Filter	Filter	Filter	Filter	Filter
Particulates (Filter)														
Total particulate	ug	2300	2300	2300	2300	2300	2300	2300	2300	2300	2300	2300	2300	2300
Total Metals (Filter)														
Arsenic (As)	ug	3.0	3.0	3.0	3.0	3.0	3.0	3.0	3.0	3.0	3.0	3.0	3.0	3.0
Cadmium (Cd)	ug	2.0	2.0	2.0	2.0	2.0	2.0	2.0	2.0	2.0	2.0	2.0	2.0	2.0
Chromium (Cr)	ug	5.0	5.0	5.0	5.0	5.0	5.0	5.0	5.0	5.0	5.0	5.0	5.0	5.0
Cobalt (Co)	ug	2.0	2.0	2.0	2.0	2.0	2.0	2.0	2.0	2.0	2.0	2.0	2.0	2.0
Copper (Cu)	ug	4.0	4.0	4.0	4.0	4.0	4.0	4.0	4.0	4.0	4.0	4.0	4.0	4.0
Iron (Fe)	ug	20	20	20	20	20	20	20	20	20	20	20	20	20
Lead (Pb)	ug	3.0	3.0	3.0	3.0	3.0	3.0	3.0	3.0	3.0	3.0	3.0	3.0	3.0
Manganese (Mn)	ug	1.0	1.0	1.0	1.0	1.0	1.0	1.0	1.0	1.0	1.0	1.0	1.0	1.0
Nickel (Ni)	ug	3.0	3.0	3.0	3.0	3.0	3.0	3.0	3.0	3.0	3.0	3.0	3.0	3.0
Selenium (Se)	ug	10	10	10	10	10	10	10	10	10	10	10	10	10
Vanadium (V)	ug	5.0	5.0	5.0	5.0	5.0	5.0	5.0	5.0	5.0	5.0	5.0	5.0	5.0
Zinc (Zn)	ug	5.0	5.0	5.0	5.0	5.0	5.0	5.0	5.0	5.0	5.0	5.0	5.0	5.0
Particulates (Dustfall)														
Fixed Dustfall	mg/dm2.day													
Volatile Dustfall	mg/dm2.day													
Total Dustfall	mg/dm2.day													
Fixed Insoluble Dustfall	mg/dm2.day													
Volatile Insoluble Dustfall	mg/dm2.day													
Total Insoluble Dustfall	mg/dm2.day													
Fixed Soluble Dustfall	mg/dm2.day													
Volatile Soluble Dustfall	mg/dm2.day													
Total Soluble Dustfall	mg/dm2.day													
Metals (Dustfall)														
Aluminum (Al)-Total	mg/dm2.day													
Antimony (Sb)-Total	mg/dm2.day													
Arsenic (As)-Total	mg/dm2.day													
Barium (Ba)-Total	mg/dm2.day													
Beryllium (Be)-Total	mg/dm2.day													
Bismuth (Bi)-Total	mg/dm2.day													
Boron (B)-Total	mg/dm2.day													
Cadmium (Cd)-Total	mg/dm2.day													
Calcium (Ca)-Total	mg/dm2.day													
Chromium (Cr)-Total	mg/dm2.day													
Cobalt (Co)-Total	mg/dm2.day													
Copper (Cu)-Total	mg/dm2.day													
Iron (Fe)-Total	mg/dm2.day													
Lead (Pb)-Total	mg/dm2.day													
Lithium (Li)-Total	mg/dm2.day													
Magnesium (Mg)-Total	mg/dm2.day													
Manganese (Mn)-Total	mg/dm2.day													
Molybdenum (Mo)-Total	mg/dm2.day													
Nickel (Ni)-Total	mg/dm2.day													
Phosphorus (P)-Total	mg/dm2.day													

Detection Limits L2585978

Job Reference NEW GOLD RRP
Report To Sarah Flesher, New Gold
Date Received 10-May-2021 8:30
Report Date 4-Jun-2021 17:27
Report Version 1

Client Sample ID		NORTHWEST-TSP-359	NORTHWEST-TSP-360	SOUTH-PM2.5-356	SOUTH-PM2.5-357	SOUTH-PM2.5-358	SOUTH-PM2.5-359	SOUTH-PM2.5-360	NORTH-PM2.5-356	NORTH-PM2.5-357	NORTH-PM2.5-358	NORTH-PM2.5-359	NORTH-PM2.5-360
Date Sampled		22-Apr-2021	28-Apr-2021	4-Apr-2021	10-Apr-2021	16-Apr-2021	22-Apr-2021	28-Apr-2021	4-Apr-2021	10-Apr-2021	16-Apr-2021	22-Apr-2021	28-Apr-2021
Time Sampled		0:00	0:00	0:00	0:00	0:00	0:00	0:00	0:00	0:00	0:00	0:00	0:00
ALS Sample ID		L2585978-14	L2585978-15	L2585978-16	L2585978-17	L2585978-18	L2585978-19	L2585978-20	L2585978-21	L2585978-22	L2585978-23	L2585978-24	L2585978-25
Parameter	Units	Filter	Filter	Filter	Filter	Filter	Filter	Filter	Filter	Filter	Filter	Filter	Filter
Particulates (Filter)													
Total particulate	ug	2300	2300	15	15	15	15	15	15	15	15	15	15
Total Metals (Filter)													
Arsenic (As)	ug	3.0	3.0										
Cadmium (Cd)	ug	2.0	2.0										
Chromium (Cr)	ug	5.0	5.0										
Cobalt (Co)	ug	2.0	2.0										
Copper (Cu)	ug	4.0	4.0										
Iron (Fe)	ug	20	20										
Lead (Pb)	ug	3.0	3.0										
Manganese (Mn)	ug	1.0	1.0										
Nickel (Ni)	ug	3.0	3.0										
Selenium (Se)	ug	10	10										
Vanadium (V)	ug	5.0	5.0										
Zinc (Zn)	ug	5.0	5.0										
Particulates (Dustfall)													
Fixed Dustfall	mg/dm2.day												
Volatile Dustfall	mg/dm2.day												
Total Dustfall	mg/dm2.day												
Fixed Insoluble Dustfall	mg/dm2.day												
Volatile Insoluble Dustfall	mg/dm2.day												
Total Insoluble Dustfall	mg/dm2.day												
Fixed Soluble Dustfall	mg/dm2.day												
Volatile Soluble Dustfall	mg/dm2.day												
Total Soluble Dustfall	mg/dm2.day												
Metals (Dustfall)													
Aluminum (Al)-Total	mg/dm2.day												
Antimony (Sb)-Total	mg/dm2.day												
Arsenic (As)-Total	mg/dm2.day												
Barium (Ba)-Total	mg/dm2.day												
Beryllium (Be)-Total	mg/dm2.day												
Bismuth (Bi)-Total	mg/dm2.day												
Boron (B)-Total	mg/dm2.day												
Cadmium (Cd)-Total	mg/dm2.day												
Calcium (Ca)-Total	mg/dm2.day												
Chromium (Cr)-Total	mg/dm2.day												
Cobalt (Co)-Total	mg/dm2.day												
Copper (Cu)-Total	mg/dm2.day												
Iron (Fe)-Total	mg/dm2.day												
Lead (Pb)-Total	mg/dm2.day												
Lithium (Li)-Total	mg/dm2.day												
Magnesium (Mg)-Total	mg/dm2.day												
Manganese (Mn)-Total	mg/dm2.day												
Molybdenum (Mo)-Total	mg/dm2.day												
Nickel (Ni)-Total	mg/dm2.day												
Phosphorus (P)-Total	mg/dm2.day												

Detection Limits L2585978

Job Reference NEW GOLD RRP
Report To Sarah Flesher, New Gold
Date Received 10-May-2021 8:30
Report Date 4-Jun-2021 17:27
Report Version 1

Client Sample ID		NORTHWEST-PM2.5-356	NORTHWEST-PM2.5-357	NORTHWEST-PM2.5-358	NORTHWEST-PM2.5-359	NORTHWEST-PM2.5-360	NOP1-DUSTFALL-4	CP1-DUSTFALL-4	WCP1-DUSTFALL-4	GH1-DUSTFALL-4	SPP1-DUSTFALL-17	SPP1-DUSTFALL-18	SPP1-DUSTFALL-19	SPP1-DUSTFALL-20
Date Sampled		4-Apr-2021	10-Apr-2021	16-Apr-2021	22-Apr-2021	28-Apr-2021	3-May-2021	3-May-2021	3-May-2021	3-May-2021	7-Apr-2021	14-Apr-2021	21-Apr-2021	28-Apr-2021
Time Sampled		0:00	0:00	0:00	0:00	0:00	0:00	0:00	0:00	0:00	0:00	0:00	0:00	0:00
ALS Sample ID		L2585978-26	L2585978-27	L2585978-28	L2585978-29	L2585978-30	L2585978-31	L2585978-32	L2585978-33	L2585978-34	L2585978-35	L2585978-36	L2585978-37	L2585978-38
Parameter	Units	Filter	Filter	Filter	Filter	Filter	Dustfall	Dustfall	Dustfall	Dustfall	Dustfall	Dustfall	Dustfall	Dustfall
Particulates (Filter)														
Total particulate	ug	15	15	15	15	15								
Total Metals (Filter)														
Arsenic (As)	ug													
Cadmium (Cd)	ug													
Chromium (Cr)	ug													
Cobalt (Co)	ug													
Copper (Cu)	ug													
Iron (Fe)	ug													
Lead (Pb)	ug													
Manganese (Mn)	ug													
Nickel (Ni)	ug													
Selenium (Se)	ug													
Vanadium (V)	ug													
Zinc (Zn)	ug													
Particulates (Dustfall)														
Fixed Dustfall	mg/dm2.day						0.10	0.10	0.10	0.10	0.43	0.43	0.43	0.43
Volatile Dustfall	mg/dm2.day						0.10	0.10	0.10	0.10	0.43	0.43	0.43	0.43
Total Dustfall	mg/dm2.day						0.10	0.10	0.10	0.10	0.43	0.43	0.43	0.43
Fixed Insoluble Dustfall	mg/dm2.day						0.10	0.10	0.10	0.10	0.43	0.43	0.43	0.43
Volatile Insoluble Dustfall	mg/dm2.day						0.10	0.10	0.10	0.10	0.43	0.43	0.43	0.43
Total Insoluble Dustfall	mg/dm2.day						0.10	0.10	0.10	0.10	0.43	0.43	0.43	0.43
Fixed Soluble Dustfall	mg/dm2.day						0.10	0.10	0.10	0.10	0.43	0.43	0.43	0.43
Volatile Soluble Dustfall	mg/dm2.day						0.10	0.10	0.10	0.10	0.43	0.43	0.43	0.43
Total Soluble Dustfall	mg/dm2.day						0.10	0.10	0.10	0.10	0.43	0.43	0.43	0.43
Metals (Dustfall)														
Aluminum (Al)-Total	mg/dm2.day						0.000043	0.000041	0.000061	0.000043	0.00019	0.00057	0.00022	0.00020
Antimony (Sb)-Total	mg/dm2.day						0.0000085	0.0000014	0.0000061	0.0000028	0.0000062	0.000019	0.0000075	0.0000067
Arsenic (As)-Total	mg/dm2.day						0.0000014	0.0000014	0.0000020	0.0000014	0.0000062	0.000019	0.0000075	0.0000067
Barium (Ba)-Total	mg/dm2.day						0.00000071	0.00000068	0.0000010	0.00000071	0.0000031	0.0000095	0.0000037	0.0000034
Beryllium (Be)-Total	mg/dm2.day						0.0000071	0.0000068	0.000010	0.0000071	0.000031	0.000095	0.000037	0.000034
Bismuth (Bi)-Total	mg/dm2.day						0.0000071	0.0000068	0.000010	0.0000071	0.000031	0.000095	0.000037	0.000034
Boron (B)-Total	mg/dm2.day						0.00014	0.00014	0.00020	0.00014	0.00062	0.0019	0.00075	0.00067
Cadmium (Cd)-Total	mg/dm2.day						0.00000071	0.00000068	0.0000010	0.00000071	0.0000031	0.0000095	0.0000037	0.0000034
Calcium (Ca)-Total	mg/dm2.day						0.00028	0.00027	0.00040	0.00028	0.0012	0.0038	0.0015	0.0013
Chromium (Cr)-Total	mg/dm2.day						0.0000071	0.0000068	0.000010	0.0000071	0.000031	0.000095	0.000037	0.000034
Cobalt (Co)-Total	mg/dm2.day						0.0000014	0.0000014	0.0000020	0.0000014	0.0000062	0.000019	0.0000075	0.0000067
Copper (Cu)-Total	mg/dm2.day						0.0000071	0.0000068	0.000010	0.0000071	0.000031	0.000095	0.000037	0.00013
Iron (Fe)-Total	mg/dm2.day						0.00043	0.00041	0.00061	0.00043	0.0019	0.0057	0.0022	0.0020
Lead (Pb)-Total	mg/dm2.day						0.00000071	0.00000068	0.0000010	0.00000071	0.0000031	0.0000095	0.0000037	0.0000034
Lithium (Li)-Total	mg/dm2.day						0.000071	0.000068	0.00010	0.000071	0.00031	0.00095	0.00037	0.00034
Magnesium (Mg)-Total	mg/dm2.day						0.000071	0.000068	0.00010	0.000071	0.00031	0.00095	0.00037	0.00034
Manganese (Mn)-Total	mg/dm2.day						0.0000014	0.0000014	0.0000020	0.0000014	0.0000062	0.000019	0.0000075	0.0000067
Molybdenum (Mo)-Total	mg/dm2.day						0.00000071	0.00000068	0.0000010	0.00000071	0.0000031	0.0000095	0.000030	0.000017
Nickel (Ni)-Total	mg/dm2.day						0.0000071	0.0000068	0.000010	0.0000071	0.000031	0.000095	0.000037	0.000034
Phosphorus (P)-Total	mg/dm2.day						0.0050	0.00068	0.0010	0.00071	0.0031	0.0095	0.0037	0.0034

Detection Limits L2585978

Job Reference NEW GOLD RRP
Report To Sarah Flesher, New Gold
Date Received 10-May-2021 8:30
Report Date 4-Jun-2021 17:27
Report Version 1

Client Sample ID		DUSTFALL-GALLINGER ROAD	DUSTFALL-TAIT ROAD (SOUTH)	DUSTFALL-NORTHWEST	SPP1-DUSTFALL-21
Date Sampled		3-May-2021	3-May-2021	3-May-2021	
Time Sampled		0:00	0:00	0:00	
ALS Sample ID		L2585978-39	L2585978-40	L2585978-41	L2585978-43
Parameter	Units	Dustfall	Dustfall	Dustfall	Dustfall
Particulates (Filter)					
Total particulate	ug				
Total Metals (Filter)					
Arsenic (As)	ug				
Cadmium (Cd)	ug				
Chromium (Cr)	ug				
Cobalt (Co)	ug				
Copper (Cu)	ug				
Iron (Fe)	ug				
Lead (Pb)	ug				
Manganese (Mn)	ug				
Nickel (Ni)	ug				
Selenium (Se)	ug				
Vanadium (V)	ug				
Zinc (Zn)	ug				
Particulates (Dustfall)					
Fixed Dustfall	mg/dm2.day	0.10	0.10	0.10	0.43
Volatile Dustfall	mg/dm2.day	0.10	0.10	0.10	0.43
Total Dustfall	mg/dm2.day	0.10	0.10	0.10	0.43
Fixed Insoluble Dustfall	mg/dm2.day	0.10	0.10	0.10	0.43
Volatile Insoluble Dustfall	mg/dm2.day	0.10	0.10	0.10	0.43
Total Insoluble Dustfall	mg/dm2.day	0.10	0.10	0.10	0.43
Fixed Soluble Dustfall	mg/dm2.day	0.10	0.10	0.10	0.43
Volatile Soluble Dustfall	mg/dm2.day	0.10	0.10	0.10	0.43
Total Soluble Dustfall	mg/dm2.day	0.10	0.10	0.10	0.43
Metals (Dustfall)					
Aluminum (Al)-Total	mg/dm2.day	0.000060	0.000037	0.000052	0.00019
Antimony (Sb)-Total	mg/dm2.day	0.0000060	0.0000074	0.0000035	0.0000064
Arsenic (As)-Total	mg/dm2.day	0.0000020	0.0000012	0.0000017	0.0000064
Barium (Ba)-Total	mg/dm2.day	0.0000010	0.00000062	0.00000087	0.0000032
Beryllium (Be)-Total	mg/dm2.day	0.000010	0.0000062	0.0000087	0.000032
Bismuth (Bi)-Total	mg/dm2.day	0.000010	0.0000062	0.0000087	0.000032
Boron (B)-Total	mg/dm2.day	0.00020	0.00012	0.00017	0.00064
Cadmium (Cd)-Total	mg/dm2.day	0.0000010	0.00000062	0.00000087	0.0000032
Calcium (Ca)-Total	mg/dm2.day	0.00040	0.00025	0.00035	0.0013
Chromium (Cr)-Total	mg/dm2.day	0.000010	0.0000062	0.0000087	0.000032
Cobalt (Co)-Total	mg/dm2.day	0.0000020	0.0000012	0.0000017	0.0000064
Copper (Cu)-Total	mg/dm2.day	0.000010	0.0000062	0.0000087	0.000032
Iron (Fe)-Total	mg/dm2.day	0.00060	0.00037	0.00052	0.0019
Lead (Pb)-Total	mg/dm2.day	0.0000010	0.00000062	0.00000087	0.0000032
Lithium (Li)-Total	mg/dm2.day	0.00010	0.000062	0.000087	0.00032
Magnesium (Mg)-Total	mg/dm2.day	0.00010	0.000062	0.000087	0.00032
Manganese (Mn)-Total	mg/dm2.day	0.0000020	0.0000012	0.0000017	0.0000064
Molybdenum (Mo)-Total	mg/dm2.day	0.0000010	0.00000062	0.00000087	0.0000032
Nickel (Ni)-Total	mg/dm2.day	0.000010	0.0000062	0.0000087	0.000032
Phosphorus (P)-Total	mg/dm2.day	0.0040	0.00062	0.00087	0.0032

Detection Limits L2585978

Job Reference NEW GOLD RRP
Report To Sarah Flesher, New Gold Inc. Rainy River Project
Date Received 10-May-2021 8:30
Report Date 4-Jun-2021 17:27
Report Version 1

Client Sample ID		SOUTH-TSP-356	SOUTH-TSP-357	SOUTH-TSP-358	SOUTH-TSP-359	SOUTH-TSP-360	NORTH-TSP-356	NORTH-TSP-357	NORTH-TSP-358	NORTH-TSP-359	NORTH-TSP-360	NORTHWEST-TSP-356	NORTHWEST-TSP-357	NORTHWEST-TSP-358
Date Sampled		4-Apr-2021	10-Apr-2021	16-Apr-2021	22-Apr-2021	28-Apr-2021	4-Apr-2021	10-Apr-2021	16-Apr-2021	22-Apr-2021	28-Apr-2021	4-Apr-2021	10-Apr-2021	16-Apr-2021
Time Sampled		0:00	0:00	0:00	0:00	0:00	0:00	0:00	0:00	0:00	0:00	0:00	0:00	0:00
ALS Sample ID		L2585978-1	L2585978-2	L2585978-3	L2585978-4	L2585978-5	L2585978-6	L2585978-7	L2585978-8	L2585978-9	L2585978-10	L2585978-11	L2585978-12	L2585978-13
Parameter	Units	Filter	Filter	Filter	Filter	Filter	Filter	Filter	Filter	Filter	Filter	Filter	Filter	Filter
Potassium (K)-Total	mg/dm2.day													
Selenium (Se)-Total	mg/dm2.day													
Silicon (Si)-Total	mg/dm2.day													
Silver (Ag)-Total	mg/dm2.day													
Sodium (Na)-Total	mg/dm2.day													
Strontium (Sr)-Total	mg/dm2.day													
Thallium (Tl)-Total	mg/dm2.day													
Tin (Sn)-Total	mg/dm2.day													
Titanium (Ti)-Total	mg/dm2.day													
Uranium (U)-Total	mg/dm2.day													
Vanadium (V)-Total	mg/dm2.day													
Zinc (Zn)-Total	mg/dm2.day													

Detection Limits L2585978

Job Reference NEW GOLD RRP
Report To Sarah Flesher, New Gold
Date Received 10-May-2021 8:30
Report Date 4-Jun-2021 17:27
Report Version 1

Client Sample ID		NORTHWEST-TSP-359	NORTHWEST-TSP-360	SOUTH-PM2.5-356	SOUTH-PM2.5-357	SOUTH-PM2.5-358	SOUTH-PM2.5-359	SOUTH-PM2.5-360	NORTH-PM2.5-356	NORTH-PM2.5-357	NORTH-PM2.5-358	NORTH-PM2.5-359	NORTH-PM2.5-360
Date Sampled		22-Apr-2021	28-Apr-2021	4-Apr-2021	10-Apr-2021	16-Apr-2021	22-Apr-2021	28-Apr-2021	4-Apr-2021	10-Apr-2021	16-Apr-2021	22-Apr-2021	28-Apr-2021
Time Sampled		0:00	0:00	0:00	0:00	0:00	0:00	0:00	0:00	0:00	0:00	0:00	0:00
ALS Sample ID		L2585978-14	L2585978-15	L2585978-16	L2585978-17	L2585978-18	L2585978-19	L2585978-20	L2585978-21	L2585978-22	L2585978-23	L2585978-24	L2585978-25
Parameter	Units	Filter	Filter	Filter	Filter	Filter	Filter	Filter	Filter	Filter	Filter	Filter	Filter
Potassium (K)-Total	mg/dm2.day												
Selenium (Se)-Total	mg/dm2.day												
Silicon (Si)-Total	mg/dm2.day												
Silver (Ag)-Total	mg/dm2.day												
Sodium (Na)-Total	mg/dm2.day												
Strontium (Sr)-Total	mg/dm2.day												
Thallium (Tl)-Total	mg/dm2.day												
Tin (Sn)-Total	mg/dm2.day												
Titanium (Ti)-Total	mg/dm2.day												
Uranium (U)-Total	mg/dm2.day												
Vanadium (V)-Total	mg/dm2.day												
Zinc (Zn)-Total	mg/dm2.day												

Detection Limits L2585978

Job Reference NEW GOLD RRP
Report To Sarah Flesher, New Gold
Date Received 10-May-2021 8:30
Report Date 4-Jun-2021 17:27
Report Version 1

Client Sample ID		NORTHWEST-PM2.5-356	NORTHWEST-PM2.5-357	NORTHWEST-PM2.5-358	NORTHWEST-PM2.5-359	NORTHWEST-PM2.5-360	NOP1-DUSTFALL-4	CP1-DUSTFALL-4	WCP1-DUSTFALL-4	GH1-DUSTFALL-4	SPP1-DUSTFALL-17	SPP1-DUSTFALL-18	SPP1-DUSTFALL-19	SPP1-DUSTFALL-20
Date Sampled		4-Apr-2021	10-Apr-2021	16-Apr-2021	22-Apr-2021	28-Apr-2021	3-May-2021	3-May-2021	3-May-2021	3-May-2021	7-Apr-2021	14-Apr-2021	21-Apr-2021	28-Apr-2021
Time Sampled		0:00	0:00	0:00	0:00	0:00	0:00	0:00	0:00	0:00	0:00	0:00	0:00	0:00
ALS Sample ID		L2585978-26	L2585978-27	L2585978-28	L2585978-29	L2585978-30	L2585978-31	L2585978-32	L2585978-33	L2585978-34	L2585978-35	L2585978-36	L2585978-37	L2585978-38
Parameter	Units	Filter	Filter	Filter	Filter	Filter	Dustfall	Dustfall	Dustfall	Dustfall	Dustfall	Dustfall	Dustfall	Dustfall
Potassium (K)-Total	mg/dm2.day						0.00071	0.00068	0.0010	0.00071	0.0031	0.0095	0.0037	0.0034
Selenium (Se)-Total	mg/dm2.day						0.000014	0.000014	0.000020	0.000014	0.000062	0.00019	0.000075	0.000067
Silicon (Si)-Total	mg/dm2.day						0.00071	0.00068	0.0010	0.00071	0.0031	0.0095	0.0037	0.0034
Silver (Ag)-Total	mg/dm2.day						0.00000014	0.00000014	0.00000020	0.00000014	0.00000062	0.0000019	0.00000075	0.00000067
Sodium (Na)-Total	mg/dm2.day						0.00071	0.00068	0.0010	0.00071	0.0031	0.0095	0.0037	0.0034
Strontium (Sr)-Total	mg/dm2.day						0.0000014	0.0000014	0.0000020	0.0000014	0.0000062	0.000019	0.0000075	0.0000067
Thallium (Tl)-Total	mg/dm2.day						0.0000014	0.0000014	0.0000020	0.0000014	0.0000062	0.000019	0.0000075	0.0000067
Tin (Sn)-Total	mg/dm2.day						0.0000028	0.0000014	0.0000040	0.0000014	0.0000062	0.000019	0.0000075	0.0000067
Titanium (Ti)-Total	mg/dm2.day						0.00014	0.00014	0.00020	0.00014	0.00062	0.0019	0.00075	0.00067
Uranium (U)-Total	mg/dm2.day						0.00000014	0.00000014	0.00000020	0.00000014	0.00000062	0.0000019	0.00000075	0.00000067
Vanadium (V)-Total	mg/dm2.day						0.000014	0.000014	0.000020	0.000014	0.000062	0.00019	0.000075	0.000067
Zinc (Zn)-Total	mg/dm2.day						0.000043	0.000041	0.000061	0.000043	0.00019	0.00057	0.00022	0.00020

Detection Limits L2585978

Job Reference NEW GOLD RRP
Report To Sarah Flesher, New Gold
Date Received 10-May-2021 8:30
Report Date 4-Jun-2021 17:27
Report Version 1

Client Sample ID		DUSTFALL-GALLINGER ROAD	DUSTFALL-TAIT ROAD (SOUTH)	DUSTFALL-NORTHWEST	SPP1-DUSTFALL-21
Date Sampled		3-May-2021	3-May-2021	3-May-2021	
Time Sampled		0:00	0:00	0:00	
ALS Sample ID		L2585978-39	L2585978-40	L2585978-41	L2585978-43
Parameter	Units	Dustfall	Dustfall	Dustfall	Dustfall
Potassium (K)-Total	mg/dm2.day	0.0010	0.00062	0.00087	0.0032
Selenium (Se)-Total	mg/dm2.day	0.000020	0.000012	0.000017	0.000064
Silicon (Si)-Total	mg/dm2.day	0.0010	0.00062	0.00087	0.0032
Silver (Ag)-Total	mg/dm2.day	0.00000020	0.00000012	0.00000017	0.00000064
Sodium (Na)-Total	mg/dm2.day	0.0010	0.00062	0.00087	0.0032
Strontium (Sr)-Total	mg/dm2.day	0.0000020	0.0000012	0.0000017	0.0000064
Thallium (Tl)-Total	mg/dm2.day	0.0000020	0.0000012	0.0000017	0.0000064
Tin (Sn)-Total	mg/dm2.day	0.0000020	0.0000012	0.0000017	0.0000064
Titanium (Ti)-Total	mg/dm2.day	0.00020	0.00012	0.00017	0.00064
Uranium (U)-Total	mg/dm2.day	0.00000020	0.00000012	0.00000017	0.00000064
Vanadium (V)-Total	mg/dm2.day	0.000020	0.000012	0.000017	0.000064
Zinc (Zn)-Total	mg/dm2.day	0.000060	0.000037	0.000052	0.00019

Report To	Sarah Flesher, New Gold Inc. Rainy River Project 5967 Highway 11/71 P.O. Box 5 Emo, ON P0W 1E0	**Date Received** **Report Date** **Report Revision** **Version**	14-Jun-2021 10:00 7-Jul-2021 14:12 1 FINAL
Client Phone	807-234-8200		

Certificate of Analysis

Lab Work Order #	L2600818
Project P.O. #	4500050093
Job Reference	NEW GOLD RRP
Legal Site Description	
C of C Numbers	

Case Narrative/Comments

Work Order Qualifiers:

Temperature - 21.9ºC °

Claire Kocharakkal, B.Sc.
Account Manager

[This report shall not be reproduced except in full without the written authority of the Laboratory.]

Sample Summary L2600818

Job Reference	NEW GOLD RRP
Report To	Sarah Flesher, New Gold Inc. Rainy River Project
Date Received	14-Jun-2021 10:00
Report Date	7-Jul-2021 14:12
Report Version	1

Sample Details

ALS Sample ID	Client Sample ID	Matrix	Date Sampled	Time Sampled	Qualifier
L2600818-1	SOUTH-TSP-361	Hi Vol Filter	04-May-21	00:00	
L2600818-2	SOUTH-TSP-362	Hi Vol Filter	10-May-21	00:00	
L2600818-3	SOUTH-TSP-363	Hi Vol Filter	16-May-21	00:00	
L2600818-4	SOUTH-TSP-364	Hi Vol Filter	22-May-21	00:00	
L2600818-5	SOUTH-TSP-365	Hi Vol Filter	28-May-21	00:00	
L2600818-6	NORTH-TSP-361	Hi Vol Filter	04-May-21	00:00	
L2600818-7	NORTH-TSP-362	Hi Vol Filter	10-May-21	00:00	
L2600818-8	NORTH-TSP-363	Hi Vol Filter	16-May-21	00:00	
L2600818-9	NORTH-TSP-364	Hi Vol Filter	22-May-21	00:00	
L2600818-10	NORTH-TSP-365	Hi Vol Filter	28-May-21	00:00	
L2600818-11	NORTHWEST-TSP-361	Hi Vol Filter	04-May-21	00:00	
L2600818-12	NORTHWEST-TSP-362	Hi Vol Filter	10-May-21	00:00	
L2600818-13	NORTHWEST-TSP-363	Hi Vol Filter	16-May-21	00:00	
L2600818-14	NORTHWEST-TSP-364	Hi Vol Filter	22-May-21	00:00	
L2600818-15	NORTHWEST-TSP-365	Hi Vol Filter	28-May-21	00:00	
L2600818-16	TSP-TRAVEL BLANK	Hi Vol Filter	08-Jun-21	00:00	
L2600818-17	SOUTH-PM2.5-361	47mm Filter	04-May-21	00:00	
L2600818-18	SOUTH-PM2.5-362	47mm Filter	10-May-21	00:00	
L2600818-19	SOUTH-PM2.5-363	47mm Filter	16-May-21	00:00	
L2600818-20	SOUTH-PM2.5-364	47mm Filter	22-May-21	00:00	
L2600818-21	SOUTH-PM2.5-365	47mm Filter	28-May-21	00:00	
L2600818-22	NORTH-PM2.5-361	47mm Filter	04-May-21	00:00	
L2600818-23	NORTH-PM2.5-362	47mm Filter	10-May-21	00:00	
L2600818-24	NORTH-PM2.5-363	47mm Filter	16-May-21	00:00	
L2600818-25	NORTH-PM2.5-364	47mm Filter	22-May-21	00:00	
L2600818-26	NORTH-PM2.5-365	47mm Filter	28-May-21	00:00	
L2600818-27	NORTHWEST-PM2.5-361	47mm Filter	04-May-21	00:00	
L2600818-28	NORTHWEST-PM2.5-362	47mm Filter	10-May-21	00:00	
L2600818-29	NORTHWEST-PM2.5-363	47mm Filter	16-May-21	00:00	
L2600818-30	NORTHWEST-PM2.5-364	47mm Filter	22-May-21	00:00	
L2600818-31	NORTHWEST-PM2.5-365	47mm Filter	28-May-21	00:00	
L2600818-32	PM2.5-TRAVEL BLANK	47mm Filter	08-Jun-21	00:00	
L2600818-33	NOP1-DUSTFALL-5	Dustfall	31-May-21	00:00	
L2600818-34	CP1-DUSTFALL-5	Dustfall	31-May-21	00:00	
L2600818-35	WCP1-DUSTFALL-5	Dustfall	31-May-21	00:00	
L2600818-36	GH1-DUSTFALL-5	Dustfall	31-May-21	00:00	
L2600818-37	SPP1-DUSTFALL-22	Dustfall	12-May-21	00:00	
L2600818-38	SPP1-DUSTFALL-23	Dustfall	19-May-21	00:00	
L2600818-39	SPP1-DUSTFALL-24	Dustfall	26-May-21	00:00	
L2600818-40	DUSTFALL-GALLINGER ROAD	Dustfall	31-May-21	00:00	
L2600818-41	DUSTFALL-TAIT ROAD (SOUTH)	Dustfall	31-May-21	00:00	
L2600818-42	DUSTFALL-NORTHWEST	Dustfall	31-May-21	00:00	
L2600818-43	SUBLETS TO MAXXAM	Dustfall			

Results Summary L2600818

Job Reference NEW GOLD RRP
Report To Sarah Flesher, New Gold Inc. Rainy River Project
Date Received 14-Jun-2021 10:00
Report Date 7-Jul-2021 14:12
Report Version 1

Client Sample ID			SOUTH-TSP-361	SOUTH-TSP-362	SOUTH-TSP-363	SOUTH-TSP-364	SOUTH-TSP-365	NORTH-TSP-361	NORTH-TSP-362	NORTH-TSP-363	NORTH-TSP-364	NORTH-TSP-365
Date Sampled			4-May-2021	10-May-2021	16-May-2021	22-May-2021	28-May-2021	4-May-2021	10-May-2021	16-May-2021	22-May-2021	28-May-2021
Time Sampled			0:00	0:00	0:00	0:00	0:00	0:00	0:00	0:00	0:00	0:00
ALS Sample ID			L2600818-1	L2600818-2	L2600818-3	L2600818-4	L2600818-5	L2600818-6	L2600818-7	L2600818-8	L2600818-9	L2600818-10
Parameter	Lowest Detection Limit	Units	Filter	Filter	Filter	Filter	Filter	Filter	Filter	Filter	Filter	Filter
Particulates (Filter)												
Total particulate	15	ug	47200	73100	102000	83000	48600	10300	119000	74800	44700	48500
Total Metals (Filter)												
Arsenic (As)	3.0	ug	<3.0	<3.0	<3.0	<3.0	<3.0	<3.0	<3.0	<3.0	<3.0	<3.0
Cadmium (Cd)	2.0	ug	<2.0	<2.0	<2.0	<2.0	<2.0	<2.0	<2.0	<2.0	<2.0	<2.0
Chromium (Cr)	5.0	ug	<5.0	5.6	<5.0	<5.0	<5.0	<5.0	<5.0	<5.0	<5.0	<5.0
Cobalt (Co)	2.0	ug	<2.0	<2.0	<2.0	<2.0	<2.0	<2.0	<2.0	<2.0	<2.0	<2.0
Copper (Cu)	4.0	ug	132	120	84.6	153	121	224	206	144	207	197
Iron (Fe)	20	ug	972	1940	1640	1380	1110	220	2580	1060	344	1120
Lead (Pb)	3.0	ug	<3.0	3.0	3.4	<3.0	<3.0	<3.0	<3.0	<3.0	<3.0	<3.0
Manganese (Mn)	1.0	ug	34.7	56.3	55.8	34.4	25.8	5.0	75.2	34.0	11.0	28.1
Nickel (Ni)	3.0	ug	<3.0	3.4	<3.0	<3.0	<3.0	<3.0	3.1	<3.0	<3.0	<3.0
Selenium (Se)	10	ug	<10	<10	<10	<10	<10	<10	<10	<10	<10	<10
Vanadium (V)	5.0	ug	<5.0	<5.0	<5.0	<5.0	<5.0	<5.0	<5.0	<5.0	<5.0	<5.0
Zinc (Zn)	5.0	ug	20.8	34.0	27.1	33.9	16.1	5.7	17.6	19.2	40.8	16.7
Particulates (Dustfall)												
Fixed Dustfall	0.11	mg/dm2.day										
Volatile Dustfall	0.11	mg/dm2.day										
Total Dustfall	0.11	mg/dm2.day										
Fixed Insoluble Dustfall	0.11	mg/dm2.day										
Volatile Insoluble Dustfall	0.11	mg/dm2.day										
Total Insoluble Dustfall	0.11	mg/dm2.day										
Fixed Soluble Dustfall	0.11	mg/dm2.day										
Volatile Soluble Dustfall	0.11	mg/dm2.day										
Total Soluble Dustfall	0.11	mg/dm2.day										

Results Summary L2600818

Job Reference NEW GOLD RRP
Report To Sarah Flesher, New Gold Inc. Rainy River Proj
Date Received 14-Jun-2021 10:00
Report Date 7-Jul-2021 14:12
Report Version 1

Client Sample ID			NORTHWEST-TSP-361	NORTHWEST-TSP-362	NORTHWEST-TSP-363	NORTHWEST-TSP-364	NORTHWEST-TSP-365	TSP-TRAVEL BLANK	SOUTH-PM2.5-361	SOUTH-PM2.5-362	SOUTH-PM2.5-363	SOUTH-PM2.5-364	SOUTH-PM2.5-365
Date Sampled			4-May-2021	10-May-2021	16-May-2021	22-May-2021	28-May-2021	8-Jun-2021	4-May-2021	10-May-2021	16-May-2021	22-May-2021	28-May-2021
Time Sampled			0:00	0:00	0:00	0:00	0:00	0:00	0:00	0:00	0:00	0:00	0:00
ALS Sample ID			L2600818-11	L2600818-12	L2600818-13	L2600818-14	L2600818-15	L2600818-16	L2600818-17	L2600818-18	L2600818-19	L2600818-20	L2600818-21
Parameter	Lowest Detection Limit	Units	Filter	Filter	Filter	Filter	Filter	Filter	Filter	Filter	Filter	Filter	Filter
Particulates (Filter)													
Total particulate	15	ug	8800	12300	87800	45000	39200	3200	<15	22	136	108	56
Total Metals (Filter)													
Arsenic (As)	3.0	ug	<3.0	<3.0	<3.0	<3.0	<3.0	<3.0					
Cadmium (Cd)	2.0	ug	<2.0	<2.0	<2.0	<2.0	<2.0	<2.0					
Chromium (Cr)	5.0	ug	<5.0	<5.0	<5.0	<5.0	<5.0	<5.0					
Cobalt (Co)	2.0	ug	<2.0	<2.0	<2.0	<2.0	<2.0	<2.0					
Copper (Cu)	4.0	ug	224	262	195	202	228	<4.0					
Iron (Fe)	20	ug	149	225	1330	431	783	<20					
Lead (Pb)	3.0	ug	<3.0	<3.0	<3.0	<3.0	<3.0	<3.0					
Manganese (Mn)	1.0	ug	3.7	6.1	41.6	13.6	22.1	<1.0					
Nickel (Ni)	3.0	ug	<3.0	<3.0	<3.0	<3.0	<3.0	<3.0					
Selenium (Se)	10	ug	<10	<10	<10	<10	<10	<10					
Vanadium (V)	5.0	ug	<5.0	<5.0	<5.0	<5.0	<5.0	<5.0					
Zinc (Zn)	5.0	ug	6.0	7.5	17.5	10.6	13.5	5.4					
Particulates (Dustfall)													
Fixed Dustfall	0.11	mg/dm2.day											
Volatile Dustfall	0.11	mg/dm2.day											
Total Dustfall	0.11	mg/dm2.day											
Fixed Insoluble Dustfall	0.11	mg/dm2.day											
Volatile Insoluble Dustfall	0.11	mg/dm2.day											
Total Insoluble Dustfall	0.11	mg/dm2.day											
Fixed Soluble Dustfall	0.11	mg/dm2.day											
Volatile Soluble Dustfall	0.11	mg/dm2.day											
Total Soluble Dustfall	0.11	mg/dm2.day											

Results Summary L2600818

Job Reference NEW GOLD RRP
Report To Sarah Flesher, New Gold Inc. Rainy River Proj
Date Received 14-Jun-2021 10:00
Report Date 7-Jul-2021 14:12
Report Version 1

Client Sample ID			NORTH-PM2.5-361	NORTH-PM2.5-362	NORTH-PM2.5-363	NORTH-PM2.5-364	NORTH-PM2.5-365	NORTHWEST-PM2.5-361	NORTHWEST-PM2.5-362	NORTHWEST-PM2.5-363	NORTHWEST-PM2.5-364	NORTHWEST-PM2.5-365	PM2.5-TRAVEL BLANK
Date Sampled			4-May-2021	10-May-2021	16-May-2021	22-May-2021	28-May-2021	4-May-2021	10-May-2021	16-May-2021	22-May-2021	28-May-2021	8-Jun-2021
Time Sampled			0:00	0:00	0:00	0:00	0:00	0:00	0:00	0:00	0:00	0:00	0:00
ALS Sample ID			L2600818-22	L2600818-23	L2600818-24	L2600818-25	L2600818-26	L2600818-27	L2600818-28	L2600818-29	L2600818-30	L2600818-31	L2600818-32
Parameter	Lowest Detection Limit	Units	Filter	Filter	Filter	Filter	Filter	Filter	Filter	Filter	Filter	Filter	Filter
Particulates (Filter)													
Total particulate	15	ug	30	<15	105	88	40	23	15	121	103	19	<15
Total Metals (Filter)													
Arsenic (As)	3.0	ug											
Cadmium (Cd)	2.0	ug											
Chromium (Cr)	5.0	ug											
Cobalt (Co)	2.0	ug											
Copper (Cu)	4.0	ug											
Iron (Fe)	20	ug											
Lead (Pb)	3.0	ug											
Manganese (Mn)	1.0	ug											
Nickel (Ni)	3.0	ug											
Selenium (Se)	10	ug											
Vanadium (V)	5.0	ug											
Zinc (Zn)	5.0	ug											
Particulates (Dustfall)													
Fixed Dustfall	0.11	mg/dm2.day											
Volatile Dustfall	0.11	mg/dm2.day											
Total Dustfall	0.11	mg/dm2.day											
Fixed Insoluble Dustfall	0.11	mg/dm2.day											
Volatile Insoluble Dustfall	0.11	mg/dm2.day											
Total Insoluble Dustfall	0.11	mg/dm2.day											
Fixed Soluble Dustfall	0.11	mg/dm2.day											
Volatile Soluble Dustfall	0.11	mg/dm2.day											
Total Soluble Dustfall	0.11	mg/dm2.day											

Results Summary L2600818

Job Reference NEW GOLD RRP
Report To Sarah Flesher, New Gold Inc. Rainy River Proj
Date Received 14-Jun-2021 10:00
Report Date 7-Jul-2021 14:12
Report Version 1

Client Sample ID			NOP1-DUSTFALL-5	CP1-DUSTFALL-5	WCP1-DUSTFALL-5	GH1-DUSTFALL-5	SPP1-DUSTFALL-22	SPP1-DUSTFALL-23	SPP1-DUSTFALL-24	DUSTFALL-GALLINGER ROAD	DUSTFALL-TAIT ROAD (SOUTH)	DUSTFALL-NORTHWEST
Date Sampled			31-May-2021 0:00	31-May-2021 0:00	31-May-2021 0:00	31-May-2021 0:00	12-May-2021 0:00	19-May-2021 0:00	26-May-2021 0:00	31-May-2021 0:00	31-May-2021 0:00	31-May-2021 0:00
Time Sampled												
ALS Sample ID			L2600818-33	L2600818-34	L2600818-35	L2600818-36	L2600818-37	L2600818-38	L2600818-39	L2600818-40	L2600818-41	L2600818-42
Parameter	Lowest Detection Limit	Units	Dustfall	Dustfall	Dustfall	Dustfall	Dustfall	Dustfall	Dustfall	Dustfall	Dustfall	Dustfall
Particulates (Filter)												
Total particulate	15	ug										
Total Metals (Filter)												
Arsenic (As)	3.0	ug										
Cadmium (Cd)	2.0	ug										
Chromium (Cr)	5.0	ug										
Cobalt (Co)	2.0	ug										
Copper (Cu)	4.0	ug										
Iron (Fe)	20	ug										
Lead (Pb)	3.0	ug										
Manganese (Mn)	1.0	ug										
Nickel (Ni)	3.0	ug										
Selenium (Se)	10	ug										
Vanadium (V)	5.0	ug										
Zinc (Zn)	5.0	ug										
Particulates (Dustfall)												
Fixed Dustfall	0.11	mg/dm2.day	2.10	2.87	15.8	1.39	22.9	8.43	4.65	0.77	1.31	0.58
Volatile Dustfall	0.11	mg/dm2.day	0.40	6.26	29.0	2.43	29.1	11.0	10.1	0.56	2.14	2.48
Total Dustfall	0.11	mg/dm2.day	2.50	9.13	44.8	3.82	52.0	19.5	14.8	1.33	3.45	3.06
Fixed Insoluble Dustfall	0.11	mg/dm2.day	1.90	1.83	7.47	0.65	15.7	5.95	1.77	0.66	0.88	0.15
Volatile Insoluble Dustfall	0.11	mg/dm2.day	<0.11	3.26	11.4	0.40	20.0	5.74	4.25	0.20	0.94	1.41
Total Insoluble Dustfall	0.11	mg/dm2.day	1.96	5.09	18.9	1.05	35.6	11.7	6.03	0.85	1.82	1.56
Fixed Soluble Dustfall	0.11	mg/dm2.day	0.20	1.03	8.34	0.74	7.28	2.48	2.87	0.11	0.43	0.43
Volatile Soluble Dustfall	0.11	mg/dm2.day	0.34	3.01	17.6	2.03	9.14	5.30	5.86	0.36	1.20	1.07
Total Soluble Dustfall	0.11	mg/dm2.day	0.54	4.04	26.0	2.76	16.4	7.78	8.74	0.48	1.63	1.50

Results Summary L2600818

Job Reference NEW GOLD RRP
Report To Sarah Flesher, New Gold Inc. Rainy River Project
Date Received 14-Jun-2021 10:00
Report Date 7-Jul-2021 14:12
Report Version 1

Client Sample ID			SOUTH-TSP-361	SOUTH-TSP-362	SOUTH-TSP-363	SOUTH-TSP-364	SOUTH-TSP-365	NORTH-TSP-361	NORTH-TSP-362	NORTH-TSP-363	NORTH-TSP-364	NORTH-TSP-365
Date Sampled			4-May-2021	10-May-2021	16-May-2021	22-May-2021	28-May-2021	4-May-2021	10-May-2021	16-May-2021	22-May-2021	28-May-2021
Time Sampled			0:00	0:00	0:00	0:00	0:00	0:00	0:00	0:00	0:00	0:00
ALS Sample ID			L2600818-1	L2600818-2	L2600818-3	L2600818-4	L2600818-5	L2600818-6	L2600818-7	L2600818-8	L2600818-9	L2600818-10
Parameter	Lowest Detection Limit	Units	Filter	Filter	Filter	Filter	Filter	Filter	Filter	Filter	Filter	Filter
Metals (Dustfall)												
Aluminum (Al)-Total	0.000043	mg/dm2.day										
Antimony (Sb)-Total	0.0000014	mg/dm2.day										
Arsenic (As)-Total	0.0000014	mg/dm2.day										
Barium (Ba)-Total	0.00000071	mg/dm2.day										
Beryllium (Be)-Total	0.0000071	mg/dm2.day										
Bismuth (Bi)-Total	0.0000071	mg/dm2.day										
Boron (B)-Total	0.00014	mg/dm2.day										
Cadmium (Cd)-Total	0.00000071	mg/dm2.day										
Calcium (Ca)-Total	0.00028	mg/dm2.day										
Chromium (Cr)-Total	0.0000071	mg/dm2.day										
Cobalt (Co)-Total	0.0000014	mg/dm2.day										
Copper (Cu)-Total	0.0000071	mg/dm2.day										
Iron (Fe)-Total	0.00043	mg/dm2.day										
Lead (Pb)-Total	0.00000071	mg/dm2.day										
Lithium (Li)-Total	0.000071	mg/dm2.day										
Magnesium (Mg)-Total	0.000071	mg/dm2.day										
Manganese (Mn)-Total	0.0000014	mg/dm2.day										
Molybdenum (Mo)-Total	0.00000071	mg/dm2.day										
Nickel (Ni)-Total	0.0000071	mg/dm2.day										
Phosphorus (P)-Total	0.00071	mg/dm2.day										
Potassium (K)-Total	0.00071	mg/dm2.day										
Selenium (Se)-Total	0.000014	mg/dm2.day										
Silicon (Si)-Total	0.00071	mg/dm2.day										
Silver (Ag)-Total	0.00000014	mg/dm2.day										
Sodium (Na)-Total	0.00071	mg/dm2.day										
Strontium (Sr)-Total	0.0000014	mg/dm2.day										
Thallium (Tl)-Total	0.0000014	mg/dm2.day										
Tin (Sn)-Total	0.0000014	mg/dm2.day										
Titanium (Ti)-Total	0.00014	mg/dm2.day										
Uranium (U)-Total	0.00000014	mg/dm2.day										
Vanadium (V)-Total	0.000014	mg/dm2.day										
Zinc (Zn)-Total	0.000043	mg/dm2.day										

Qualifier Legend

DLB Detection Limit Raised. Analyte detected at comparable level in Method Blank.

Results Summary L2600818

Job Reference NEW GOLD RRP
Report To Sarah Flesher, New Gold Inc. Rainy River Proj
Date Received 14-Jun-2021 10:00
Report Date 7-Jul-2021 14:12
Report Version 1

Client Sample ID			NORTHWEST-TSP-361	NORTHWEST-TSP-362	NORTHWEST-TSP-363	NORTHWEST-TSP-364	NORTHWEST-TSP-365	TSP-TRAVEL BLANK	SOUTH-PM2.5-361	SOUTH-PM2.5-362	SOUTH-PM2.5-363	SOUTH-PM2.5-364	SOUTH-PM2.5-365
Date Sampled			4-May-2021	10-May-2021	16-May-2021	22-May-2021	28-May-2021	8-Jun-2021	4-May-2021	10-May-2021	16-May-2021	22-May-2021	28-May-2021
Time Sampled			0:00	0:00	0:00	0:00	0:00	0:00	0:00	0:00	0:00	0:00	0:00
ALS Sample ID			L2600818-11	L2600818-12	L2600818-13	L2600818-14	L2600818-15	L2600818-16	L2600818-17	L2600818-18	L2600818-19	L2600818-20	L2600818-21
Parameter	Lowest Detection Limit	Units	Filter	Filter	Filter	Filter	Filter	Filter	Filter	Filter	Filter	Filter	Filter
Metals (Dustfall)													
Aluminum (Al)-Total	0.000043	mg/dm2.day											
Antimony (Sb)-Total	0.0000014	mg/dm2.day											
Arsenic (As)-Total	0.0000014	mg/dm2.day											
Barium (Ba)-Total	0.00000071	mg/dm2.day											
Beryllium (Be)-Total	0.0000071	mg/dm2.day											
Bismuth (Bi)-Total	0.0000071	mg/dm2.day											
Boron (B)-Total	0.00014	mg/dm2.day											
Cadmium (Cd)-Total	0.00000071	mg/dm2.day											
Calcium (Ca)-Total	0.00028	mg/dm2.day											
Chromium (Cr)-Total	0.0000071	mg/dm2.day											
Cobalt (Co)-Total	0.0000014	mg/dm2.day											
Copper (Cu)-Total	0.0000071	mg/dm2.day											
Iron (Fe)-Total	0.00043	mg/dm2.day											
Lead (Pb)-Total	0.00000071	mg/dm2.day											
Lithium (Li)-Total	0.000071	mg/dm2.day											
Magnesium (Mg)-Total	0.000071	mg/dm2.day											
Manganese (Mn)-Total	0.0000014	mg/dm2.day											
Molybdenum (Mo)-Total	0.00000071	mg/dm2.day											
Nickel (Ni)-Total	0.0000071	mg/dm2.day											
Phosphorus (P)-Total	0.00071	mg/dm2.day											
Potassium (K)-Total	0.00071	mg/dm2.day											
Selenium (Se)-Total	0.000014	mg/dm2.day											
Silicon (Si)-Total	0.00071	mg/dm2.day											
Silver (Ag)-Total	0.00000014	mg/dm2.day											
Sodium (Na)-Total	0.00071	mg/dm2.day											
Strontium (Sr)-Total	0.0000014	mg/dm2.day											
Thallium (Tl)-Total	0.0000014	mg/dm2.day											
Tin (Sn)-Total	0.0000014	mg/dm2.day											
Titanium (Ti)-Total	0.00014	mg/dm2.day											
Uranium (U)-Total	0.00000014	mg/dm2.day											
Vanadium (V)-Total	0.000014	mg/dm2.day											
Zinc (Zn)-Total	0.000043	mg/dm2.day											

Qualifier Legend

DLB Detection Limit Raised. Analyte detected at cc

Results Summary L2600818

Job Reference NEW GOLD RRP
Report To Sarah Flesher, New Gold Inc. Rainy River Proj
Date Received 14-Jun-2021 10:00
Report Date 7-Jul-2021 14:12
Report Version 1

Client Sample ID			NORTH-PM2.5-361	NORTH-PM2.5-362	NORTH-PM2.5-363	NORTH-PM2.5-364	NORTH-PM2.5-365	NORTHWEST-PM2.5-361	NORTHWEST-PM2.5-362	NORTHWEST-PM2.5-363	NORTHWEST-PM2.5-364	NORTHWEST-PM2.5-365	PM2.5-TRAVEL BLANK
Date Sampled			4-May-2021	10-May-2021	16-May-2021	22-May-2021	28-May-2021	4-May-2021	10-May-2021	16-May-2021	22-May-2021	28-May-2021	8-Jun-2021
Time Sampled			0:00	0:00	0:00	0:00	0:00	0:00	0:00	0:00	0:00	0:00	0:00
ALS Sample ID			L2600818-22	L2600818-23	L2600818-24	L2600818-25	L2600818-26	L2600818-27	L2600818-28	L2600818-29	L2600818-30	L2600818-31	L2600818-32
Parameter	Lowest Detection Limit	Units	Filter	Filter	Filter	Filter	Filter	Filter	Filter	Filter	Filter	Filter	Filter
Metals (Dustfall)													
Aluminum (Al)-Total	0.000043	mg/dm2.day											
Antimony (Sb)-Total	0.0000014	mg/dm2.day											
Arsenic (As)-Total	0.0000014	mg/dm2.day											
Barium (Ba)-Total	0.00000071	mg/dm2.day											
Beryllium (Be)-Total	0.0000071	mg/dm2.day											
Bismuth (Bi)-Total	0.0000071	mg/dm2.day											
Boron (B)-Total	0.00014	mg/dm2.day											
Cadmium (Cd)-Total	0.00000071	mg/dm2.day											
Calcium (Ca)-Total	0.00028	mg/dm2.day											
Chromium (Cr)-Total	0.0000071	mg/dm2.day											
Cobalt (Co)-Total	0.0000014	mg/dm2.day											
Copper (Cu)-Total	0.0000071	mg/dm2.day											
Iron (Fe)-Total	0.00043	mg/dm2.day											
Lead (Pb)-Total	0.00000071	mg/dm2.day											
Lithium (Li)-Total	0.000071	mg/dm2.day											
Magnesium (Mg)-Total	0.000071	mg/dm2.day											
Manganese (Mn)-Total	0.0000014	mg/dm2.day											
Molybdenum (Mo)-Total	0.00000071	mg/dm2.day											
Nickel (Ni)-Total	0.0000071	mg/dm2.day											
Phosphorus (P)-Total	0.00071	mg/dm2.day											
Potassium (K)-Total	0.00071	mg/dm2.day											
Selenium (Se)-Total	0.000014	mg/dm2.day											
Silicon (Si)-Total	0.00071	mg/dm2.day											
Silver (Ag)-Total	0.00000014	mg/dm2.day											
Sodium (Na)-Total	0.00071	mg/dm2.day											
Strontium (Sr)-Total	0.0000014	mg/dm2.day											
Thallium (Tl)-Total	0.0000014	mg/dm2.day											
Tin (Sn)-Total	0.0000014	mg/dm2.day											
Titanium (Ti)-Total	0.00014	mg/dm2.day											
Uranium (U)-Total	0.00000014	mg/dm2.day											
Vanadium (V)-Total	0.000014	mg/dm2.day											
Zinc (Zn)-Total	0.000043	mg/dm2.day											

Qualifier Legend

DLB	Detection Limit Raised. Analyte detected at cc

Results Summary L2600818

Job Reference NEW GOLD RRP
Report To Sarah Flesher, New Gold Inc. Rainy River Proj
Date Received 14-Jun-2021 10:00
Report Date 7-Jul-2021 14:12
Report Version 1

Client Sample ID			NOP1-DUSTFALL-5	CP1-DUSTFALL-5	WCP1-DUSTFALL-5	GH1-DUSTFALL-5	SPP1-DUSTFALL-22	SPP1-DUSTFALL-23	SPP1-DUSTFALL-24	DUSTFALL-GALLINGER ROAD	DUSTFALL-TAIT ROAD (SOUTH)	DUSTFALL-NORTHWEST
Date Sampled			31-May-2021	31-May-2021	31-May-2021	31-May-2021	12-May-2021	19-May-2021	26-May-2021	31-May-2021	31-May-2021	31-May-2021
Time Sampled			0:00	0:00	0:00	0:00	0:00	0:00	0:00	0:00	0:00	0:00
ALS Sample ID			L2600818-33	L2600818-34	L2600818-35	L2600818-36	L2600818-37	L2600818-38	L2600818-39	L2600818-40	L2600818-41	L2600818-42
Parameter	Lowest Detection Limit	Units	Dustfall	Dustfall	Dustfall	Dustfall	Dustfall	Dustfall	Dustfall	Dustfall	Dustfall	Dustfall
Metals (Dustfall)												
Aluminum (Al)-Total	0.000043	mg/dm2.day	0.0270	0.0150	0.0465	0.00647	0.129	0.0500	0.0240	0.00207	0.0141	0.00142
Antimony (Sb)-Total	0.0000014	mg/dm2.day	0.0000032	0.0000020	0.0000039	<0.0000014	0.0000080	0.0000104	<0.0000080	0.0000035	0.0000021	0.0000021
Arsenic (As)-Total	0.0000014	mg/dm2.day	0.0000146	0.0000160	0.0000857	0.0000080	0.000152	0.0000607	0.0000223	0.0000024	0.0000059	0.0000026
Barium (Ba)-Total	0.00000071	mg/dm2.day	0.000146	0.000219	0.000601	0.0000814	0.00209	0.00101	0.000375	0.0000616	0.000128	0.0000326
Beryllium (Be)-Total	0.0000071	mg/dm2.day	<0.0000071	<0.0000071	<0.0000071	<0.0000071	<0.000034	<0.000032	<0.000040	<0.0000097	<0.000011	<0.0000089
Bismuth (Bi)-Total	0.0000071	mg/dm2.day	<0.0000071	<0.0000071	<0.0000071	<0.0000071	<0.000034	<0.000032	<0.000040	<0.0000097	<0.000011	<0.0000089
Boron (B)-Total	0.00014	mg/dm2.day	<0.00014	<0.00014	0.00051	<0.00014	<0.00067	<0.00064	<0.00080	<0.00019	<0.00021	<0.00018
Cadmium (Cd)-Total	0.00000071	mg/dm2.day	0.00000306	0.00000383	0.0000319	<0.00000071	0.000173	0.0000271	0.0000090	<0.00000097	0.0000052	<0.00000089
Calcium (Ca)-Total	0.00028	mg/dm2.day	0.0646	0.105	0.678	0.113	0.835	0.791	0.467	0.0306	0.0451	0.0149
Chromium (Cr)-Total	0.0000071	mg/dm2.day	0.0000340	0.0000326	0.0000976	0.0000109	0.000241	0.000096	0.000057	<0.0000097	0.000028	<0.0000089
Cobalt (Co)-Total	0.0000014	mg/dm2.day	0.0000065	0.0000193	0.0000933	0.0000098	0.000120	0.0000333	0.0000136	0.0000026	0.0000125	<0.0000018
Copper (Cu)-Total	0.0000071	mg/dm2.day	0.0000869	0.000567	0.00279	0.000144	0.00219	0.00128	0.000851	0.0000342	0.000124	0.0000543
Iron (Fe)-Total	0.00043	mg/dm2.day	0.0225	0.0200	0.0773	0.00731	0.153	0.0512	0.0287	0.00233	0.0175	0.00188
Lead (Pb)-Total	0.00000071	mg/dm2.day	0.000186	0.0000256	0.000135	0.0000136	0.000562	0.000514	0.000182	0.00000261	0.0000222	0.00000362
Lithium (Li)-Total	0.000071	mg/dm2.day	<0.000071	<0.000071	0.000112	<0.000071	<0.00034	<0.00032	<0.00040	<0.000097	<0.00011	<0.000089
Magnesium (Mg)-Total	0.000071	mg/dm2.day	0.0153	0.0570	0.116	0.0263	0.349	0.126	0.0823	0.00602	0.0269	0.00915
Manganese (Mn)-Total	0.0000014	mg/dm2.day	0.00147	0.00237	0.00414	0.000177	0.0170	0.00539	0.00288	0.000469	0.000975	0.000182
Molybdenum (Mo)-Total	0.00000071	mg/dm2.day	<0.0000043	0.0000281	0.000145	0.0000266	0.000137	<0.000039	<0.000048	<0.000013	0.0000340	<0.0000035
Nickel (Ni)-Total	0.0000071	mg/dm2.day	0.0000272	0.000104	0.000182	0.0000168	0.000328	0.000129	0.000092	0.0000119	0.000048	<0.0000089
Phosphorus (P)-Total	0.00071	mg/dm2.day	0.00227	0.162	1.55	0.150	1.07	0.431	0.343	0.00287	0.0692	0.0127
Potassium (K)-Total	0.00071	mg/dm2.day	0.0100	0.276	2.66	0.126	1.33	0.452	0.471	0.00744	0.0963	0.0337
Selenium (Se)-Total	0.000014	mg/dm2.day	<0.000014	0.000018	0.000125	<0.000014	0.000321	<0.000064	<0.000080	<0.000019	<0.000021	<0.000018
Silicon (Si)-Total	0.00071	mg/dm2.day	0.0328	0.0373	0.102	0.0138	0.312	0.0861	0.0453	0.00379	0.0232	0.00342
Silver (Ag)-Total	0.00000014	mg/dm2.day	0.00000895	0.00000117	0.00000896	0.00000033	0.0000133	0.0000201	0.00000408	<0.00000019	0.00000048	<0.00000018
Sodium (Na)-Total	0.00071	mg/dm2.day	0.00383	0.0383	0.600	0.0388	0.393	0.230	0.118	0.00247	0.0141	0.106
Strontium (Sr)-Total	0.0000014	mg/dm2.day	0.000149	0.000253	0.000811	0.000115	0.00232	0.00188	0.000386	0.0000598	0.000123	0.0000322
Thallium (Tl)-Total	0.0000014	mg/dm2.day	<0.0000014	<0.0000014	<0.0000014	<0.0000014	<0.0000067	<0.0000064	<0.0000080	<0.0000019	<0.0000021	<0.0000018
Tin (Sn)-Total	0.0000014	mg/dm2.day	<0.0000014	0.0000018	0.0000026	<0.0000014	0.0000069	<0.0000064	<0.0000080	<0.0000019	<0.0000021	<0.0000018
Titanium (Ti)-Total	0.00014	mg/dm2.day	0.00044	0.00041	0.00098	0.00018	0.00276	0.00089	<0.00080	<0.00019	0.00030	<0.00018
Uranium (U)-Total	0.00000014	mg/dm2.day	0.00000061	0.00000591	0.00000404	0.00000039	0.0000154	0.0000115	0.00000124	<0.00000019	0.00000104	0.00000022
Vanadium (V)-Total	0.000014	mg/dm2.day	0.000038	0.000049	0.000123	0.000015	0.000304	0.000091	<0.000080	<0.000019	0.000032	<0.000018
Zinc (Zn)-Total	0.000043	mg/dm2.day	0.000803	0.00180	0.0127	0.000270	0.0198	0.00510	0.00388	0.000093	0.000723	0.000251

Qualifier Legend

DLB Detection Limit Raised. Analyte detected at cc

Results of Analysis L2600818

Job Reference	NEW GOLD RRP
Report To	Sarah Flesher, New Gold Inc. Rainy River Project
Date Received	14-Jun-2021 10:00
Report Date	7-Jul-2021 14:12
Report Version	1

Parameter	ALS ID	Client Sample ID	ALS Test Code	Results	Detection Limit	Units	Qual	Date Sampled	Time Sampled	Prep Date	Analysis Date	QC Lot	QC Eval	Hold Time Eval	Matrix	Class
Particulates (Filter)																
Total particulate	L2600818-1	SOUTH-TSP-361	PART-HIVOL-GRAV-BU	47200	2300	ug		04-May-21	00:00		18-Jun-21	1490801	✓	✓	Filter	Particulates
Total Metals (Filter)																
Arsenic (As)	L2600818-1	SOUTH-TSP-361	MET-IO3.5-MS-BU	<3.0	3.0	ug		04-May-21	00:00	24-Jun-21	24-Jun-21	1494383	✓	✓	Filter	Total Metals
Cadmium (Cd)	L2600818-1	SOUTH-TSP-361	MET-IO3.5-MS-BU	<2.0	2.0	ug		04-May-21	00:00	24-Jun-21	24-Jun-21	1494383	✓	✓	Filter	Total Metals
Chromium (Cr)	L2600818-1	SOUTH-TSP-361	MET-IO3.5-MS-BU	<5.0	5.0	ug		04-May-21	00:00	24-Jun-21	24-Jun-21	1494383	✓	✓	Filter	Total Metals
Cobalt (Co)	L2600818-1	SOUTH-TSP-361	MET-IO3.5-MS-BU	<2.0	2.0	ug		04-May-21	00:00	24-Jun-21	24-Jun-21	1494383	✓	✓	Filter	Total Metals
Copper (Cu)	L2600818-1	SOUTH-TSP-361	MET-IO3.5-MS-BU	132	4.0	ug		04-May-21	00:00	24-Jun-21	24-Jun-21	1494383	✓	✓	Filter	Total Metals
Iron (Fe)	L2600818-1	SOUTH-TSP-361	MET-IO3.5-MS-BU	972	20	ug		04-May-21	00:00	24-Jun-21	24-Jun-21	1494383	✓	✓	Filter	Total Metals
Lead (Pb)	L2600818-1	SOUTH-TSP-361	MET-IO3.5-MS-BU	<3.0	3.0	ug		04-May-21	00:00	24-Jun-21	24-Jun-21	1494383	✓	✓	Filter	Total Metals
Manganese (Mn)	L2600818-1	SOUTH-TSP-361	MET-IO3.5-MS-BU	34.7	1.0	ug		04-May-21	00:00	24-Jun-21	24-Jun-21	1494383	✓	✓	Filter	Total Metals
Nickel (Ni)	L2600818-1	SOUTH-TSP-361	MET-IO3.5-MS-BU	<3.0	3.0	ug		04-May-21	00:00	24-Jun-21	24-Jun-21	1494383	✓	✓	Filter	Total Metals
Selenium (Se)	L2600818-1	SOUTH-TSP-361	MET-IO3.5-MS-BU	<10	10	ug		04-May-21	00:00	24-Jun-21	24-Jun-21	1494383	✓	✓	Filter	Total Metals
Vanadium (V)	L2600818-1	SOUTH-TSP-361	MET-IO3.5-MS-BU	<5.0	5.0	ug		04-May-21	00:00	24-Jun-21	24-Jun-21	1494383	✓	✓	Filter	Total Metals
Zinc (Zn)	L2600818-1	SOUTH-TSP-361	MET-IO3.5-MS-BU	20.8	5.0	ug		04-May-21	00:00	24-Jun-21	24-Jun-21	1494383	✓	✓	Filter	Total Metals
Particulates (Filter)																
Total particulate	L2600818-2	SOUTH-TSP-362	PART-HIVOL-GRAV-BU	73100	2300	ug		10-May-21	00:00		18-Jun-21	1490801	✓	✓	Filter	Particulates
Total Metals (Filter)																
Arsenic (As)	L2600818-2	SOUTH-TSP-362	MET-IO3.5-MS-BU	<3.0	3.0	ug		10-May-21	00:00	24-Jun-21	24-Jun-21	1494383	✓	✓	Filter	Total Metals
Cadmium (Cd)	L2600818-2	SOUTH-TSP-362	MET-IO3.5-MS-BU	<2.0	2.0	ug		10-May-21	00:00	24-Jun-21	24-Jun-21	1494383	✓	✓	Filter	Total Metals
Chromium (Cr)	L2600818-2	SOUTH-TSP-362	MET-IO3.5-MS-BU	5.6	5.0	ug		10-May-21	00:00	24-Jun-21	24-Jun-21	1494383	✓	✓	Filter	Total Metals
Cobalt (Co)	L2600818-2	SOUTH-TSP-362	MET-IO3.5-MS-BU	<2.0	2.0	ug		10-May-21	00:00	24-Jun-21	24-Jun-21	1494383	✓	✓	Filter	Total Metals
Copper (Cu)	L2600818-2	SOUTH-TSP-362	MET-IO3.5-MS-BU	120	4.0	ug		10-May-21	00:00	24-Jun-21	24-Jun-21	1494383	✓	✓	Filter	Total Metals
Iron (Fe)	L2600818-2	SOUTH-TSP-362	MET-IO3.5-MS-BU	1940	20	ug		10-May-21	00:00	24-Jun-21	24-Jun-21	1494383	✓	✓	Filter	Total Metals
Lead (Pb)	L2600818-2	SOUTH-TSP-362	MET-IO3.5-MS-BU	3.0	3.0	ug		10-May-21	00:00	24-Jun-21	24-Jun-21	1494383	✓	✓	Filter	Total Metals
Manganese (Mn)	L2600818-2	SOUTH-TSP-362	MET-IO3.5-MS-BU	56.3	1.0	ug		10-May-21	00:00	24-Jun-21	24-Jun-21	1494383	✓	✓	Filter	Total Metals
Nickel (Ni)	L2600818-2	SOUTH-TSP-362	MET-IO3.5-MS-BU	3.4	3.0	ug		10-May-21	00:00	24-Jun-21	24-Jun-21	1494383	✓	✓	Filter	Total Metals
Selenium (Se)	L2600818-2	SOUTH-TSP-362	MET-IO3.5-MS-BU	<10	10	ug		10-May-21	00:00	24-Jun-21	24-Jun-21	1494383	✓	✓	Filter	Total Metals
Vanadium (V)	L2600818-2	SOUTH-TSP-362	MET-IO3.5-MS-BU	<5.0	5.0	ug		10-May-21	00:00	24-Jun-21	24-Jun-21	1494383	✓	✓	Filter	Total Metals
Zinc (Zn)	L2600818-2	SOUTH-TSP-362	MET-IO3.5-MS-BU	34.0	5.0	ug		10-May-21	00:00	24-Jun-21	24-Jun-21	1494383	✓	✓	Filter	Total Metals
Particulates (Filter)																
Total particulate	L2600818-3	SOUTH-TSP-363	PART-HIVOL-GRAV-BU	102000	2300	ug		16-May-21	00:00		18-Jun-21	1490801	✓	✓	Filter	Particulates
Total Metals (Filter)																
Arsenic (As)	L2600818-3	SOUTH-TSP-363	MET-IO3.5-MS-BU	<3.0	3.0	ug		16-May-21	00:00	24-Jun-21	24-Jun-21	1494383	✓	✓	Filter	Total Metals
Cadmium (Cd)	L2600818-3	SOUTH-TSP-363	MET-IO3.5-MS-BU	<2.0	2.0	ug		16-May-21	00:00	24-Jun-21	24-Jun-21	1494383	✓	✓	Filter	Total Metals
Chromium (Cr)	L2600818-3	SOUTH-TSP-363	MET-IO3.5-MS-BU	<5.0	5.0	ug		16-May-21	00:00	24-Jun-21	24-Jun-21	1494383	✓	✓	Filter	Total Metals
Cobalt (Co)	L2600818-3	SOUTH-TSP-363	MET-IO3.5-MS-BU	<2.0	2.0	ug		16-May-21	00:00	24-Jun-21	24-Jun-21	1494383	✓	✓	Filter	Total Metals
Copper (Cu)	L2600818-3	SOUTH-TSP-363	MET-IO3.5-MS-BU	84.6	4.0	ug		16-May-21	00:00	24-Jun-21	24-Jun-21	1494383	✓	✓	Filter	Total Metals
Iron (Fe)	L2600818-3	SOUTH-TSP-363	MET-IO3.5-MS-BU	1640	20	ug		16-May-21	00:00	24-Jun-21	24-Jun-21	1494383	✓	✓	Filter	Total Metals
Lead (Pb)	L2600818-3	SOUTH-TSP-363	MET-IO3.5-MS-BU	3.4	3.0	ug		16-May-21	00:00	24-Jun-21	24-Jun-21	1494383	✓	✓	Filter	Total Metals
Manganese (Mn)	L2600818-3	SOUTH-TSP-363	MET-IO3.5-MS-BU	55.8	1.0	ug		16-May-21	00:00	24-Jun-21	24-Jun-21	1494383	✓	✓	Filter	Total Metals
Nickel (Ni)	L2600818-3	SOUTH-TSP-363	MET-IO3.5-MS-BU	<3.0	3.0	ug		16-May-21	00:00	24-Jun-21	24-Jun-21	1494383	✓	✓	Filter	Total Metals
Selenium (Se)	L2600818-3	SOUTH-TSP-363	MET-IO3.5-MS-BU	<10	10	ug		16-May-21	00:00	24-Jun-21	24-Jun-21	1494383	✓	✓	Filter	Total Metals
Vanadium (V)	L2600818-3	SOUTH-TSP-363	MET-IO3.5-MS-BU	<5.0	5.0	ug		16-May-21	00:00	24-Jun-21	24-Jun-21	1494383	✓	✓	Filter	Total Metals
Zinc (Zn)	L2600818-3	SOUTH-TSP-363	MET-IO3.5-MS-BU	27.1	5.0	ug		16-May-21	00:00	24-Jun-21	24-Jun-21	1494383	✓	✓	Filter	Total Metals
Particulates (Filter)																
Total particulate	L2600818-4	SOUTH-TSP-364	PART-HIVOL-GRAV-BU	83000	2300	ug		22-May-21	00:00		18-Jun-21	1490801	✓	✓	Filter	Particulates
Total Metals (Filter)																
Arsenic (As)	L2600818-4	SOUTH-TSP-364	MET-IO3.5-MS-BU	<3.0	3.0	ug		22-May-21	00:00	24-Jun-21	24-Jun-21	1494383	✓	✓	Filter	Total Metals
Cadmium (Cd)	L2600818-4	SOUTH-TSP-364	MET-IO3.5-MS-BU	<2.0	2.0	ug		22-May-21	00:00	24-Jun-21	24-Jun-21	1494383	✓	✓	Filter	Total Metals
Chromium (Cr)	L2600818-4	SOUTH-TSP-364	MET-IO3.5-MS-BU	<5.0	5.0	ug		22-May-21	00:00	24-Jun-21	24-Jun-21	1494383	✓	✓	Filter	Total Metals
Cobalt (Co)	L2600818-4	SOUTH-TSP-364	MET-IO3.5-MS-BU	<2.0	2.0	ug		22-May-21	00:00	24-Jun-21	24-Jun-21	1494383	✓	✓	Filter	Total Metals
Copper (Cu)	L2600818-4	SOUTH-TSP-364	MET-IO3.5-MS-BU	153	4.0	ug		22-May-21	00:00	24-Jun-21	24-Jun-21	1494383	✓	✓	Filter	Total Metals
Iron (Fe)	L2600818-4	SOUTH-TSP-364	MET-IO3.5-MS-BU	1380	20	ug		22-May-21	00:00	24-Jun-21	24-Jun-21	1494383	✓	✓	Filter	Total Metals
Lead (Pb)	L2600818-4	SOUTH-TSP-364	MET-IO3.5-MS-BU	<3.0	3.0	ug		22-May-21	00:00	24-Jun-21	24-Jun-21	1494383	✓	✓	Filter	Total Metals
Manganese (Mn)	L2600818-4	SOUTH-TSP-364	MET-IO3.5-MS-BU	34.4	1.0	ug		22-May-21	00:00	24-Jun-21	24-Jun-21	1494383	✓	✓	Filter	Total Metals
Nickel (Ni)	L2600818-4	SOUTH-TSP-364	MET-IO3.5-MS-BU	<3.0	3.0	ug		22-May-21	00:00	24-Jun-21	24-Jun-21	1494383	✓	✓	Filter	Total Metals
Selenium (Se)	L2600818-4	SOUTH-TSP-364	MET-IO3.5-MS-BU	<10	10	ug		22-May-21	00:00	24-Jun-21	24-Jun-21	1494383	✓	✓	Filter	Total Metals
Vanadium (V)	L2600818-4	SOUTH-TSP-364	MET-IO3.5-MS-BU	<5.0	5.0	ug		22-May-21	00:00	24-Jun-21	24-Jun-21	1494383	✓	✓	Filter	Total Metals
Zinc (Zn)	L2600818-4	SOUTH-TSP-364	MET-IO3.5-MS-BU	33.9	5.0	ug		22-May-21	00:00	24-Jun-21	24-Jun-21	1494383	✓	✓	Filter	Total Metals
Particulates (Filter)																
Total particulate	L2600818-5	SOUTH-TSP-365	PART-HIVOL-GRAV-BU	48600	2300	ug		28-May-21	00:00		18-Jun-21	1490801	✓	✓	Filter	Particulates
Total Metals (Filter)																
Arsenic (As)	L2600818-5	SOUTH-TSP-365	MET-IO3.5-MS-BU	<3.0	3.0	ug		28-May-21	00:00	24-Jun-21	24-Jun-21	1494383	✓	✓	Filter	Total Metals
Cadmium (Cd)	L2600818-5	SOUTH-TSP-365	MET-IO3.5-MS-BU	<2.0	2.0	ug		28-May-21	00:00	24-Jun-21	24-Jun-21	1494383	✓	✓	Filter	Total Metals
Chromium (Cr)	L2600818-5	SOUTH-TSP-365	MET-IO3.5-MS-BU	<5.0	5.0	ug		28-May-21	00:00	24-Jun-21	24-Jun-21	1494383	✓	✓	Filter	Total Metals
Cobalt (Co)	L2600818-5	SOUTH-TSP-365	MET-IO3.5-MS-BU	<2.0	2.0	ug		28-May-21	00:00	24-Jun-21	24-Jun-21	1494383	✓	✓	Filter	Total Metals

Results of Analysis L2600818

Job Reference	NEW GOLD RRP
Report To	Sarah Flesher, New Gold Inc. Rainy River Project
Date Received	14-Jun-2021 10:00
Report Date	7-Jul-2021 14:12
Report Version	1

Parameter	ALS ID	Client Sample ID	ALS Test Code	Results	Detection Limit	Units	Qual	Date Sampled	Time Sampled	Prep Date	Analysis Date	QC Lot	QC Eval	Hold Time Eval	Matrix	Class
Copper (Cu)	L2600818-5	SOUTH-TSP-365	MET-IO3.5-MS-BU	121	4.0	ug		28-May-21	00:00	24-Jun-21	24-Jun-21	1494383	✓	✓	Filter	Total Metals
Iron (Fe)	L2600818-5	SOUTH-TSP-365	MET-IO3.5-MS-BU	1110	20	ug		28-May-21	00:00	24-Jun-21	24-Jun-21	1494383	✓	✓	Filter	Total Metals
Lead (Pb)	L2600818-5	SOUTH-TSP-365	MET-IO3.5-MS-BU	<3.0	3.0	ug		28-May-21	00:00	24-Jun-21	24-Jun-21	1494383	✓	✓	Filter	Total Metals
Manganese (Mn)	L2600818-5	SOUTH-TSP-365	MET-IO3.5-MS-BU	25.8	1.0	ug		28-May-21	00:00	24-Jun-21	24-Jun-21	1494383	✓	✓	Filter	Total Metals
Nickel (Ni)	L2600818-5	SOUTH-TSP-365	MET-IO3.5-MS-BU	<3.0	3.0	ug		28-May-21	00:00	24-Jun-21	24-Jun-21	1494383	✓	✓	Filter	Total Metals
Selenium (Se)	L2600818-5	SOUTH-TSP-365	MET-IO3.5-MS-BU	<10	10	ug		28-May-21	00:00	24-Jun-21	24-Jun-21	1494383	✓	✓	Filter	Total Metals
Vanadium (V)	L2600818-5	SOUTH-TSP-365	MET-IO3.5-MS-BU	<5.0	5.0	ug		28-May-21	00:00	24-Jun-21	24-Jun-21	1494383	✓	✓	Filter	Total Metals
Zinc (Zn)	L2600818-5	SOUTH-TSP-365	MET-IO3.5-MS-BU	16.1	5.0	ug		28-May-21	00:00	24-Jun-21	24-Jun-21	1494383	✓	✓	Filter	Total Metals
Particulates (Filter)																
Total particulate	L2600818-6	NORTH-TSP-361	PART-HIVOL-GRAV-BU	10300	2300	ug		04-May-21	00:00		18-Jun-21	1490801	✓	✓	Filter	Particulates
Total Metals (Filter)																
Arsenic (As)	L2600818-6	NORTH-TSP-361	MET-IO3.5-MS-BU	<3.0	3.0	ug		04-May-21	00:00	24-Jun-21	24-Jun-21	1494383	✓	✓	Filter	Total Metals
Cadmium (Cd)	L2600818-6	NORTH-TSP-361	MET-IO3.5-MS-BU	<2.0	2.0	ug		04-May-21	00:00	24-Jun-21	24-Jun-21	1494383	✓	✓	Filter	Total Metals
Chromium (Cr)	L2600818-6	NORTH-TSP-361	MET-IO3.5-MS-BU	<5.0	5.0	ug		04-May-21	00:00	24-Jun-21	24-Jun-21	1494383	✓	✓	Filter	Total Metals
Cobalt (Co)	L2600818-6	NORTH-TSP-361	MET-IO3.5-MS-BU	<2.0	2.0	ug		04-May-21	00:00	24-Jun-21	24-Jun-21	1494383	✓	✓	Filter	Total Metals
Copper (Cu)	L2600818-6	NORTH-TSP-361	MET-IO3.5-MS-BU	224	4.0	ug		04-May-21	00:00	24-Jun-21	24-Jun-21	1494383	✓	✓	Filter	Total Metals
Iron (Fe)	L2600818-6	NORTH-TSP-361	MET-IO3.5-MS-BU	220	20	ug		04-May-21	00:00	24-Jun-21	24-Jun-21	1494383	✓	✓	Filter	Total Metals
Lead (Pb)	L2600818-6	NORTH-TSP-361	MET-IO3.5-MS-BU	<3.0	3.0	ug		04-May-21	00:00	24-Jun-21	24-Jun-21	1494383	✓	✓	Filter	Total Metals
Manganese (Mn)	L2600818-6	NORTH-TSP-361	MET-IO3.5-MS-BU	5.0	1.0	ug		04-May-21	00:00	24-Jun-21	24-Jun-21	1494383	✓	✓	Filter	Total Metals
Nickel (Ni)	L2600818-6	NORTH-TSP-361	MET-IO3.5-MS-BU	<3.0	3.0	ug		04-May-21	00:00	24-Jun-21	24-Jun-21	1494383	✓	✓	Filter	Total Metals
Selenium (Se)	L2600818-6	NORTH-TSP-361	MET-IO3.5-MS-BU	<10	10	ug		04-May-21	00:00	24-Jun-21	24-Jun-21	1494383	✓	✓	Filter	Total Metals
Vanadium (V)	L2600818-6	NORTH-TSP-361	MET-IO3.5-MS-BU	<5.0	5.0	ug		04-May-21	00:00	24-Jun-21	24-Jun-21	1494383	✓	✓	Filter	Total Metals
Zinc (Zn)	L2600818-6	NORTH-TSP-361	MET-IO3.5-MS-BU	5.7	5.0	ug		04-May-21	00:00	24-Jun-21	24-Jun-21	1494383	✓	✓	Filter	Total Metals
Particulates (Filter)																
Total particulate	L2600818-7	NORTH-TSP-362	PART-HIVOL-GRAV-BU	119000	2300	ug		10-May-21	00:00		18-Jun-21	1490801	✓	✓	Filter	Particulates
Total Metals (Filter)																
Arsenic (As)	L2600818-7	NORTH-TSP-362	MET-IO3.5-MS-BU	<3.0	3.0	ug		10-May-21	00:00	24-Jun-21	24-Jun-21	1494383	✓	✓	Filter	Total Metals
Cadmium (Cd)	L2600818-7	NORTH-TSP-362	MET-IO3.5-MS-BU	<2.0	2.0	ug		10-May-21	00:00	24-Jun-21	24-Jun-21	1494383	✓	✓	Filter	Total Metals
Chromium (Cr)	L2600818-7	NORTH-TSP-362	MET-IO3.5-MS-BU	<5.0	5.0	ug		10-May-21	00:00	24-Jun-21	24-Jun-21	1494383	✓	✓	Filter	Total Metals
Cobalt (Co)	L2600818-7	NORTH-TSP-362	MET-IO3.5-MS-BU	<2.0	2.0	ug		10-May-21	00:00	24-Jun-21	24-Jun-21	1494383	✓	✓	Filter	Total Metals
Copper (Cu)	L2600818-7	NORTH-TSP-362	MET-IO3.5-MS-BU	206	4.0	ug		10-May-21	00:00	24-Jun-21	24-Jun-21	1494383	✓	✓	Filter	Total Metals
Iron (Fe)	L2600818-7	NORTH-TSP-362	MET-IO3.5-MS-BU	2580	20	ug		10-May-21	00:00	24-Jun-21	24-Jun-21	1494383	✓	✓	Filter	Total Metals
Lead (Pb)	L2600818-7	NORTH-TSP-362	MET-IO3.5-MS-BU	<3.0	3.0	ug		10-May-21	00:00	24-Jun-21	24-Jun-21	1494383	✓	✓	Filter	Total Metals
Manganese (Mn)	L2600818-7	NORTH-TSP-362	MET-IO3.5-MS-BU	75.2	1.0	ug		10-May-21	00:00	24-Jun-21	24-Jun-21	1494383	✓	✓	Filter	Total Metals
Nickel (Ni)	L2600818-7	NORTH-TSP-362	MET-IO3.5-MS-BU	3.1	3.0	ug		10-May-21	00:00	24-Jun-21	24-Jun-21	1494383	✓	✓	Filter	Total Metals
Selenium (Se)	L2600818-7	NORTH-TSP-362	MET-IO3.5-MS-BU	<10	10	ug		10-May-21	00:00	24-Jun-21	24-Jun-21	1494383	✓	✓	Filter	Total Metals
Vanadium (V)	L2600818-7	NORTH-TSP-362	MET-IO3.5-MS-BU	<5.0	5.0	ug		10-May-21	00:00	24-Jun-21	24-Jun-21	1494383	✓	✓	Filter	Total Metals
Zinc (Zn)	L2600818-7	NORTH-TSP-362	MET-IO3.5-MS-BU	17.6	5.0	ug		10-May-21	00:00	24-Jun-21	24-Jun-21	1494383	✓	✓	Filter	Total Metals
Particulates (Filter)																
Total particulate	L2600818-8	NORTH-TSP-363	PART-HIVOL-GRAV-BU	74800	2300	ug		16-May-21	00:00		18-Jun-21	1490801	✓	✓	Filter	Particulates
Total Metals (Filter)																
Arsenic (As)	L2600818-8	NORTH-TSP-363	MET-IO3.5-MS-BU	<3.0	3.0	ug		16-May-21	00:00	24-Jun-21	24-Jun-21	1494383	✓	✓	Filter	Total Metals
Cadmium (Cd)	L2600818-8	NORTH-TSP-363	MET-IO3.5-MS-BU	<2.0	2.0	ug		16-May-21	00:00	24-Jun-21	24-Jun-21	1494383	✓	✓	Filter	Total Metals
Chromium (Cr)	L2600818-8	NORTH-TSP-363	MET-IO3.5-MS-BU	<5.0	5.0	ug		16-May-21	00:00	24-Jun-21	24-Jun-21	1494383	✓	✓	Filter	Total Metals
Cobalt (Co)	L2600818-8	NORTH-TSP-363	MET-IO3.5-MS-BU	<2.0	2.0	ug		16-May-21	00:00	24-Jun-21	24-Jun-21	1494383	✓	✓	Filter	Total Metals
Copper (Cu)	L2600818-8	NORTH-TSP-363	MET-IO3.5-MS-BU	144	4.0	ug		16-May-21	00:00	24-Jun-21	24-Jun-21	1494383	✓	✓	Filter	Total Metals
Iron (Fe)	L2600818-8	NORTH-TSP-363	MET-IO3.5-MS-BU	1060	20	ug		16-May-21	00:00	24-Jun-21	24-Jun-21	1494383	✓	✓	Filter	Total Metals
Lead (Pb)	L2600818-8	NORTH-TSP-363	MET-IO3.5-MS-BU	<3.0	3.0	ug		16-May-21	00:00	24-Jun-21	24-Jun-21	1494383	✓	✓	Filter	Total Metals
Manganese (Mn)	L2600818-8	NORTH-TSP-363	MET-IO3.5-MS-BU	34.0	1.0	ug		16-May-21	00:00	24-Jun-21	24-Jun-21	1494383	✓	✓	Filter	Total Metals
Nickel (Ni)	L2600818-8	NORTH-TSP-363	MET-IO3.5-MS-BU	<3.0	3.0	ug		16-May-21	00:00	24-Jun-21	24-Jun-21	1494383	✓	✓	Filter	Total Metals
Selenium (Se)	L2600818-8	NORTH-TSP-363	MET-IO3.5-MS-BU	<10	10	ug		16-May-21	00:00	24-Jun-21	24-Jun-21	1494383	✓	✓	Filter	Total Metals
Vanadium (V)	L2600818-8	NORTH-TSP-363	MET-IO3.5-MS-BU	<5.0	5.0	ug		16-May-21	00:00	24-Jun-21	24-Jun-21	1494383	✓	✓	Filter	Total Metals
Zinc (Zn)	L2600818-8	NORTH-TSP-363	MET-IO3.5-MS-BU	19.2	5.0	ug		16-May-21	00:00	24-Jun-21	24-Jun-21	1494383	✓	✓	Filter	Total Metals
Particulates (Filter)																
Total particulate	L2600818-9	NORTH-TSP-364	PART-HIVOL-GRAV-BU	44700	2300	ug		22-May-21	00:00		18-Jun-21	1490801	✓	✓	Filter	Particulates
Total Metals (Filter)																
Arsenic (As)	L2600818-9	NORTH-TSP-364	MET-IO3.5-MS-BU	<3.0	3.0	ug		22-May-21	00:00	24-Jun-21	24-Jun-21	1494383	✓	✓	Filter	Total Metals
Cadmium (Cd)	L2600818-9	NORTH-TSP-364	MET-IO3.5-MS-BU	<2.0	2.0	ug		22-May-21	00:00	24-Jun-21	24-Jun-21	1494383	✓	✓	Filter	Total Metals
Chromium (Cr)	L2600818-9	NORTH-TSP-364	MET-IO3.5-MS-BU	<5.0	5.0	ug		22-May-21	00:00	24-Jun-21	24-Jun-21	1494383	✓	✓	Filter	Total Metals
Cobalt (Co)	L2600818-9	NORTH-TSP-364	MET-IO3.5-MS-BU	<2.0	2.0	ug		22-May-21	00:00	24-Jun-21	24-Jun-21	1494383	✓	✓	Filter	Total Metals
Copper (Cu)	L2600818-9	NORTH-TSP-364	MET-IO3.5-MS-BU	207	4.0	ug		22-May-21	00:00	24-Jun-21	24-Jun-21	1494383	✓	✓	Filter	Total Metals
Iron (Fe)	L2600818-9	NORTH-TSP-364	MET-IO3.5-MS-BU	344	20	ug		22-May-21	00:00	24-Jun-21	24-Jun-21	1494383	✓	✓	Filter	Total Metals
Lead (Pb)	L2600818-9	NORTH-TSP-364	MET-IO3.5-MS-BU	<3.0	3.0	ug		22-May-21	00:00	24-Jun-21	24-Jun-21	1494383	✓	✓	Filter	Total Metals
Manganese (Mn)	L2600818-9	NORTH-TSP-364	MET-IO3.5-MS-BU	11.0	1.0	ug		22-May-21	00:00	24-Jun-21	24-Jun-21	1494383	✓	✓	Filter	Total Metals
Nickel (Ni)	L2600818-9	NORTH-TSP-364	MET-IO3.5-MS-BU	<3.0	3.0	ug		22-May-21	00:00	24-Jun-21	24-Jun-21	1494383	✓	✓	Filter	Total Metals
Selenium (Se)	L2600818-9	NORTH-TSP-364	MET-IO3.5-MS-BU	<10	10	ug		22-May-21	00:00	24-Jun-21	24-Jun-21	1494383	✓	✓	Filter	Total Metals
Vanadium (V)	L2600818-9	NORTH-TSP-364	MET-IO3.5-MS-BU	<5.0	5.0	ug		22-May-21	00:00	24-Jun-21	24-Jun-21	1494383	✓	✓	Filter	Total Metals
Zinc (Zn)	L2600818-9	NORTH-TSP-364	MET-IO3.5-MS-BU	40.8	5.0	ug		22-May-21	00:00	24-Jun-21	24-Jun-21	1494383	✓	✓	Filter	Total Metals

Results of Analysis L2600818

Job Reference	NEW GOLD RRP
Report To	Sarah Flesher, New Gold Inc. Rainy River Project
Date Received	14-Jun-2021 10:00
Report Date	7-Jul-2021 14:12
Report Version	1

Parameter	ALS ID	Client Sample ID	ALS Test Code	Results	Detection Limit	Units	Qual	Date Sampled	Time Sampled	Prep Date	Analysis Date	QC Lot	QC Eval	Hold Time Eval	Matrix	Class
Particulates (Filter)																
Total particulate	L2600818-10	NORTH-TSP-365	PART-HIVOL-GRAV-BU	48500	2300	ug		28-May-21	00:00		18-Jun-21	1490801	✓	✓	Filter	Particulates
Total Metals (Filter)																
Arsenic (As)	L2600818-10	NORTH-TSP-365	MET-IO3.5-MS-BU	<3.0	3.0	ug		28-May-21	00:00	24-Jun-21	24-Jun-21	1494383	✓	✓	Filter	Total Metals
Cadmium (Cd)	L2600818-10	NORTH-TSP-365	MET-IO3.5-MS-BU	<2.0	2.0	ug		28-May-21	00:00	24-Jun-21	24-Jun-21	1494383	✓	✓	Filter	Total Metals
Chromium (Cr)	L2600818-10	NORTH-TSP-365	MET-IO3.5-MS-BU	<5.0	5.0	ug		28-May-21	00:00	24-Jun-21	24-Jun-21	1494383	✓	✓	Filter	Total Metals
Cobalt (Co)	L2600818-10	NORTH-TSP-365	MET-IO3.5-MS-BU	<2.0	2.0	ug		28-May-21	00:00	24-Jun-21	24-Jun-21	1494383	✓	✓	Filter	Total Metals
Copper (Cu)	L2600818-10	NORTH-TSP-365	MET-IO3.5-MS-BU	197	4.0	ug		28-May-21	00:00	24-Jun-21	24-Jun-21	1494383	✓	✓	Filter	Total Metals
Iron (Fe)	L2600818-10	NORTH-TSP-365	MET-IO3.5-MS-BU	1120	20	ug		28-May-21	00:00	24-Jun-21	24-Jun-21	1494383	✓	✓	Filter	Total Metals
Lead (Pb)	L2600818-10	NORTH-TSP-365	MET-IO3.5-MS-BU	<3.0	3.0	ug		28-May-21	00:00	24-Jun-21	24-Jun-21	1494383	✓	✓	Filter	Total Metals
Manganese (Mn)	L2600818-10	NORTH-TSP-365	MET-IO3.5-MS-BU	28.1	1.0	ug		28-May-21	00:00	24-Jun-21	24-Jun-21	1494383	✓	✓	Filter	Total Metals
Nickel (Ni)	L2600818-10	NORTH-TSP-365	MET-IO3.5-MS-BU	<3.0	3.0	ug		28-May-21	00:00	24-Jun-21	24-Jun-21	1494383	✓	✓	Filter	Total Metals
Selenium (Se)	L2600818-10	NORTH-TSP-365	MET-IO3.5-MS-BU	<10	10	ug		28-May-21	00:00	24-Jun-21	24-Jun-21	1494383	✓	✓	Filter	Total Metals
Vanadium (V)	L2600818-10	NORTH-TSP-365	MET-IO3.5-MS-BU	<5.0	5.0	ug		28-May-21	00:00	24-Jun-21	24-Jun-21	1494383	✓	✓	Filter	Total Metals
Zinc (Zn)	L2600818-10	NORTH-TSP-365	MET-IO3.5-MS-BU	16.7	5.0	ug		28-May-21	00:00	24-Jun-21	24-Jun-21	1494383	✓	✓	Filter	Total Metals
Particulates (Filter)																
Total particulate	L2600818-11	NORTHWEST-TSP-361	PART-HIVOL-GRAV-BU	8800	2300	ug		04-May-21	00:00		18-Jun-21	1490801	✓	✓	Filter	Particulates
Total Metals (Filter)																
Arsenic (As)	L2600818-11	NORTHWEST-TSP-361	MET-IO3.5-MS-BU	<3.0	3.0	ug		04-May-21	00:00	24-Jun-21	24-Jun-21	1494383	✓	✓	Filter	Total Metals
Cadmium (Cd)	L2600818-11	NORTHWEST-TSP-361	MET-IO3.5-MS-BU	<2.0	2.0	ug		04-May-21	00:00	24-Jun-21	24-Jun-21	1494383	✓	✓	Filter	Total Metals
Chromium (Cr)	L2600818-11	NORTHWEST-TSP-361	MET-IO3.5-MS-BU	<5.0	5.0	ug		04-May-21	00:00	24-Jun-21	24-Jun-21	1494383	✓	✓	Filter	Total Metals
Cobalt (Co)	L2600818-11	NORTHWEST-TSP-361	MET-IO3.5-MS-BU	<2.0	2.0	ug		04-May-21	00:00	24-Jun-21	24-Jun-21	1494383	✓	✓	Filter	Total Metals
Copper (Cu)	L2600818-11	NORTHWEST-TSP-361	MET-IO3.5-MS-BU	224	4.0	ug		04-May-21	00:00	24-Jun-21	24-Jun-21	1494383	✓	✓	Filter	Total Metals
Iron (Fe)	L2600818-11	NORTHWEST-TSP-361	MET-IO3.5-MS-BU	149	20	ug		04-May-21	00:00	24-Jun-21	24-Jun-21	1494383	✓	✓	Filter	Total Metals
Lead (Pb)	L2600818-11	NORTHWEST-TSP-361	MET-IO3.5-MS-BU	<3.0	3.0	ug		04-May-21	00:00	24-Jun-21	24-Jun-21	1494383	✓	✓	Filter	Total Metals
Manganese (Mn)	L2600818-11	NORTHWEST-TSP-361	MET-IO3.5-MS-BU	3.7	1.0	ug		04-May-21	00:00	24-Jun-21	24-Jun-21	1494383	✓	✓	Filter	Total Metals
Nickel (Ni)	L2600818-11	NORTHWEST-TSP-361	MET-IO3.5-MS-BU	<3.0	3.0	ug		04-May-21	00:00	24-Jun-21	24-Jun-21	1494383	✓	✓	Filter	Total Metals
Selenium (Se)	L2600818-11	NORTHWEST-TSP-361	MET-IO3.5-MS-BU	<10	10	ug		04-May-21	00:00	24-Jun-21	24-Jun-21	1494383	✓	✓	Filter	Total Metals
Vanadium (V)	L2600818-11	NORTHWEST-TSP-361	MET-IO3.5-MS-BU	<5.0	5.0	ug		04-May-21	00:00	24-Jun-21	24-Jun-21	1494383	✓	✓	Filter	Total Metals
Zinc (Zn)	L2600818-11	NORTHWEST-TSP-361	MET-IO3.5-MS-BU	6.0	5.0	ug		04-May-21	00:00	24-Jun-21	24-Jun-21	1494383	✓	✓	Filter	Total Metals
Particulates (Filter)																
Total particulate	L2600818-12	NORTHWEST-TSP-362	PART-HIVOL-GRAV-BU	12300	2300	ug		10-May-21	00:00		18-Jun-21	1490801	✓	✓	Filter	Particulates
Total Metals (Filter)																
Arsenic (As)	L2600818-12	NORTHWEST-TSP-362	MET-IO3.5-MS-BU	<3.0	3.0	ug		10-May-21	00:00	24-Jun-21	24-Jun-21	1494383	✓	✓	Filter	Total Metals
Cadmium (Cd)	L2600818-12	NORTHWEST-TSP-362	MET-IO3.5-MS-BU	<2.0	2.0	ug		10-May-21	00:00	24-Jun-21	24-Jun-21	1494383	✓	✓	Filter	Total Metals
Chromium (Cr)	L2600818-12	NORTHWEST-TSP-362	MET-IO3.5-MS-BU	<5.0	5.0	ug		10-May-21	00:00	24-Jun-21	24-Jun-21	1494383	✓	✓	Filter	Total Metals
Cobalt (Co)	L2600818-12	NORTHWEST-TSP-362	MET-IO3.5-MS-BU	<2.0	2.0	ug		10-May-21	00:00	24-Jun-21	24-Jun-21	1494383	✓	✓	Filter	Total Metals
Copper (Cu)	L2600818-12	NORTHWEST-TSP-362	MET-IO3.5-MS-BU	262	4.0	ug		10-May-21	00:00	24-Jun-21	24-Jun-21	1494383	✓	✓	Filter	Total Metals
Iron (Fe)	L2600818-12	NORTHWEST-TSP-362	MET-IO3.5-MS-BU	225	20	ug		10-May-21	00:00	24-Jun-21	24-Jun-21	1494383	✓	✓	Filter	Total Metals
Lead (Pb)	L2600818-12	NORTHWEST-TSP-362	MET-IO3.5-MS-BU	<3.0	3.0	ug		10-May-21	00:00	24-Jun-21	24-Jun-21	1494383	✓	✓	Filter	Total Metals
Manganese (Mn)	L2600818-12	NORTHWEST-TSP-362	MET-IO3.5-MS-BU	6.1	1.0	ug		10-May-21	00:00	24-Jun-21	24-Jun-21	1494383	✓	✓	Filter	Total Metals
Nickel (Ni)	L2600818-12	NORTHWEST-TSP-362	MET-IO3.5-MS-BU	<3.0	3.0	ug		10-May-21	00:00	24-Jun-21	24-Jun-21	1494383	✓	✓	Filter	Total Metals
Selenium (Se)	L2600818-12	NORTHWEST-TSP-362	MET-IO3.5-MS-BU	<10	10	ug		10-May-21	00:00	24-Jun-21	24-Jun-21	1494383	✓	✓	Filter	Total Metals
Vanadium (V)	L2600818-12	NORTHWEST-TSP-362	MET-IO3.5-MS-BU	<5.0	5.0	ug		10-May-21	00:00	24-Jun-21	24-Jun-21	1494383	✓	✓	Filter	Total Metals
Zinc (Zn)	L2600818-12	NORTHWEST-TSP-362	MET-IO3.5-MS-BU	7.5	5.0	ug		10-May-21	00:00	24-Jun-21	24-Jun-21	1494383	✓	✓	Filter	Total Metals
Particulates (Filter)																
Total particulate	L2600818-13	NORTHWEST-TSP-363	PART-HIVOL-GRAV-BU	87800	2300	ug		16-May-21	00:00		18-Jun-21	1490801	✓	✓	Filter	Particulates
Total Metals (Filter)																
Arsenic (As)	L2600818-13	NORTHWEST-TSP-363	MET-IO3.5-MS-BU	<3.0	3.0	ug		16-May-21	00:00	24-Jun-21	24-Jun-21	1494383	✓	✓	Filter	Total Metals
Cadmium (Cd)	L2600818-13	NORTHWEST-TSP-363	MET-IO3.5-MS-BU	<2.0	2.0	ug		16-May-21	00:00	24-Jun-21	24-Jun-21	1494383	✓	✓	Filter	Total Metals
Chromium (Cr)	L2600818-13	NORTHWEST-TSP-363	MET-IO3.5-MS-BU	<5.0	5.0	ug		16-May-21	00:00	24-Jun-21	24-Jun-21	1494383	✓	✓	Filter	Total Metals
Cobalt (Co)	L2600818-13	NORTHWEST-TSP-363	MET-IO3.5-MS-BU	<2.0	2.0	ug		16-May-21	00:00	24-Jun-21	24-Jun-21	1494383	✓	✓	Filter	Total Metals
Copper (Cu)	L2600818-13	NORTHWEST-TSP-363	MET-IO3.5-MS-BU	195	4.0	ug		16-May-21	00:00	24-Jun-21	24-Jun-21	1494383	✓	✓	Filter	Total Metals
Iron (Fe)	L2600818-13	NORTHWEST-TSP-363	MET-IO3.5-MS-BU	1330	20	ug		16-May-21	00:00	24-Jun-21	24-Jun-21	1494383	✓	✓	Filter	Total Metals
Lead (Pb)	L2600818-13	NORTHWEST-TSP-363	MET-IO3.5-MS-BU	<3.0	3.0	ug		16-May-21	00:00	24-Jun-21	24-Jun-21	1494383	✓	✓	Filter	Total Metals
Manganese (Mn)	L2600818-13	NORTHWEST-TSP-363	MET-IO3.5-MS-BU	41.6	1.0	ug		16-May-21	00:00	24-Jun-21	24-Jun-21	1494383	✓	✓	Filter	Total Metals
Nickel (Ni)	L2600818-13	NORTHWEST-TSP-363	MET-IO3.5-MS-BU	<3.0	3.0	ug		16-May-21	00:00	24-Jun-21	24-Jun-21	1494383	✓	✓	Filter	Total Metals
Selenium (Se)	L2600818-13	NORTHWEST-TSP-363	MET-IO3.5-MS-BU	<10	10	ug		16-May-21	00:00	24-Jun-21	24-Jun-21	1494383	✓	✓	Filter	Total Metals
Vanadium (V)	L2600818-13	NORTHWEST-TSP-363	MET-IO3.5-MS-BU	<5.0	5.0	ug		16-May-21	00:00	24-Jun-21	24-Jun-21	1494383	✓	✓	Filter	Total Metals
Zinc (Zn)	L2600818-13	NORTHWEST-TSP-363	MET-IO3.5-MS-BU	17.5	5.0	ug		16-May-21	00:00	24-Jun-21	24-Jun-21	1494383	✓	✓	Filter	Total Metals
Particulates (Filter)																
Total particulate	L2600818-14	NORTHWEST-TSP-364	PART-HIVOL-GRAV-BU	45000	2300	ug		22-May-21	00:00		18-Jun-21	1490801	✓	✓	Filter	Particulates
Total Metals (Filter)																
Arsenic (As)	L2600818-14	NORTHWEST-TSP-364	MET-IO3.5-MS-BU	<3.0	3.0	ug		22-May-21	00:00	24-Jun-21	24-Jun-21	1494383	✓	✓	Filter	Total Metals
Cadmium (Cd)	L2600818-14	NORTHWEST-TSP-364	MET-IO3.5-MS-BU	<2.0	2.0	ug		22-May-21	00:00	24-Jun-21	24-Jun-21	1494383	✓	✓	Filter	Total Metals
Chromium (Cr)	L2600818-14	NORTHWEST-TSP-364	MET-IO3.5-MS-BU	<5.0	5.0	ug		22-May-21	00:00	24-Jun-21	24-Jun-21	1494383	✓	✓	Filter	Total Metals
Cobalt (Co)	L2600818-14	NORTHWEST-TSP-364	MET-IO3.5-MS-BU	<2.0	2.0	ug		22-May-21	00:00	24-Jun-21	24-Jun-21	1494383	✓	✓	Filter	Total Metals
Copper (Cu)	L2600818-14	NORTHWEST-TSP-364	MET-IO3.5-MS-BU	202	4.0	ug		22-May-21	00:00	24-Jun-21	24-Jun-21	1494383	✓	✓	Filter	Total Metals

Results of Analysis L2600818

Job Reference	NEW GOLD RRP
Report To	Sarah Flesher, New Gold Inc. Rainy River Project
Date Received	14-Jun-2021 10:00
Report Date	7-Jul-2021 14:12
Report Version	1

Parameter	ALS ID	Client Sample ID	ALS Test Code	Results	Detection Limit	Units	Qual	Date Sampled	Time Sampled	Prep Date	Analysis Date	QC Lot	QC Eval	Hold Time Eval	Matrix	Class
Iron (Fe)	L2600818-14	NORTHWEST-TSP-364	MET-IO3.5-MS-BU	431	20	ug		22-May-21	00:00	24-Jun-21	24-Jun-21	1494383	✓	✓	Filter	Total Metals
Lead (Pb)	L2600818-14	NORTHWEST-TSP-364	MET-IO3.5-MS-BU	<3.0	3.0	ug		22-May-21	00:00	24-Jun-21	24-Jun-21	1494383	✓	✓	Filter	Total Metals
Manganese (Mn)	L2600818-14	NORTHWEST-TSP-364	MET-IO3.5-MS-BU	13.6	1.0	ug		22-May-21	00:00	24-Jun-21	24-Jun-21	1494383	✓	✓	Filter	Total Metals
Nickel (Ni)	L2600818-14	NORTHWEST-TSP-364	MET-IO3.5-MS-BU	<3.0	3.0	ug		22-May-21	00:00	24-Jun-21	24-Jun-21	1494383	✓	✓	Filter	Total Metals
Selenium (Se)	L2600818-14	NORTHWEST-TSP-364	MET-IO3.5-MS-BU	<10	10	ug		22-May-21	00:00	24-Jun-21	24-Jun-21	1494383	✓	✓	Filter	Total Metals
Vanadium (V)	L2600818-14	NORTHWEST-TSP-364	MET-IO3.5-MS-BU	<5.0	5.0	ug		22-May-21	00:00	24-Jun-21	24-Jun-21	1494383	✓	✓	Filter	Total Metals
Zinc (Zn)	L2600818-14	NORTHWEST-TSP-364	MET-IO3.5-MS-BU	10.6	5.0	ug		22-May-21	00:00	24-Jun-21	24-Jun-21	1494383	✓	✓	Filter	Total Metals
Particulates (Filter)																
Total particulate	L2600818-15	NORTHWEST-TSP-365	PART-HIVOL-GRAV-BU	39200	2300	ug		28-May-21	00:00		18-Jun-21	1490801	✓	✓	Filter	Particulates
Total Metals (Filter)																
Arsenic (As)	L2600818-15	NORTHWEST-TSP-365	MET-IO3.5-MS-BU	<3.0	3.0	ug		28-May-21	00:00	24-Jun-21	24-Jun-21	1494383	✓	✓	Filter	Total Metals
Cadmium (Cd)	L2600818-15	NORTHWEST-TSP-365	MET-IO3.5-MS-BU	<2.0	2.0	ug		28-May-21	00:00	24-Jun-21	24-Jun-21	1494383	✓	✓	Filter	Total Metals
Chromium (Cr)	L2600818-15	NORTHWEST-TSP-365	MET-IO3.5-MS-BU	<5.0	5.0	ug		28-May-21	00:00	24-Jun-21	24-Jun-21	1494383	✓	✓	Filter	Total Metals
Cobalt (Co)	L2600818-15	NORTHWEST-TSP-365	MET-IO3.5-MS-BU	<2.0	2.0	ug		28-May-21	00:00	24-Jun-21	24-Jun-21	1494383	✓	✓	Filter	Total Metals
Copper (Cu)	L2600818-15	NORTHWEST-TSP-365	MET-IO3.5-MS-BU	228	4.0	ug		28-May-21	00:00	24-Jun-21	24-Jun-21	1494383	✓	✓	Filter	Total Metals
Iron (Fe)	L2600818-15	NORTHWEST-TSP-365	MET-IO3.5-MS-BU	783	20	ug		28-May-21	00:00	24-Jun-21	24-Jun-21	1494383	✓	✓	Filter	Total Metals
Lead (Pb)	L2600818-15	NORTHWEST-TSP-365	MET-IO3.5-MS-BU	<3.0	3.0	ug		28-May-21	00:00	24-Jun-21	24-Jun-21	1494383	✓	✓	Filter	Total Metals
Manganese (Mn)	L2600818-15	NORTHWEST-TSP-365	MET-IO3.5-MS-BU	22.1	1.0	ug		28-May-21	00:00	24-Jun-21	24-Jun-21	1494383	✓	✓	Filter	Total Metals
Nickel (Ni)	L2600818-15	NORTHWEST-TSP-365	MET-IO3.5-MS-BU	<3.0	3.0	ug		28-May-21	00:00	24-Jun-21	24-Jun-21	1494383	✓	✓	Filter	Total Metals
Selenium (Se)	L2600818-15	NORTHWEST-TSP-365	MET-IO3.5-MS-BU	<10	10	ug		28-May-21	00:00	24-Jun-21	24-Jun-21	1494383	✓	✓	Filter	Total Metals
Vanadium (V)	L2600818-15	NORTHWEST-TSP-365	MET-IO3.5-MS-BU	<5.0	5.0	ug		28-May-21	00:00	24-Jun-21	24-Jun-21	1494383	✓	✓	Filter	Total Metals
Zinc (Zn)	L2600818-15	NORTHWEST-TSP-365	MET-IO3.5-MS-BU	13.5	5.0	ug		28-May-21	00:00	24-Jun-21	24-Jun-21	1494383	✓	✓	Filter	Total Metals
Particulates (Filter)																
Total particulate	L2600818-16	TSP-TRAVEL BLANK	PART-HIVOL-GRAV-BU	3200	2300	ug		08-Jun-21	00:00		18-Jun-21	1490801	✓	✓	Filter	Particulates
Total Metals (Filter)																
Arsenic (As)	L2600818-16	TSP-TRAVEL BLANK	MET-IO3.5-MS-BU	<3.0	3.0	ug		08-Jun-21	00:00	24-Jun-21	24-Jun-21	1494383	✓	✓	Filter	Total Metals
Cadmium (Cd)	L2600818-16	TSP-TRAVEL BLANK	MET-IO3.5-MS-BU	<2.0	2.0	ug		08-Jun-21	00:00	24-Jun-21	24-Jun-21	1494383	✓	✓	Filter	Total Metals
Chromium (Cr)	L2600818-16	TSP-TRAVEL BLANK	MET-IO3.5-MS-BU	<5.0	5.0	ug		08-Jun-21	00:00	24-Jun-21	24-Jun-21	1494383	✓	✓	Filter	Total Metals
Cobalt (Co)	L2600818-16	TSP-TRAVEL BLANK	MET-IO3.5-MS-BU	<2.0	2.0	ug		08-Jun-21	00:00	24-Jun-21	24-Jun-21	1494383	✓	✓	Filter	Total Metals
Copper (Cu)	L2600818-16	TSP-TRAVEL BLANK	MET-IO3.5-MS-BU	<4.0	4.0	ug		08-Jun-21	00:00	24-Jun-21	24-Jun-21	1494383	✓	✓	Filter	Total Metals
Iron (Fe)	L2600818-16	TSP-TRAVEL BLANK	MET-IO3.5-MS-BU	<20	20	ug		08-Jun-21	00:00	24-Jun-21	24-Jun-21	1494383	✓	✓	Filter	Total Metals
Lead (Pb)	L2600818-16	TSP-TRAVEL BLANK	MET-IO3.5-MS-BU	<3.0	3.0	ug		08-Jun-21	00:00	24-Jun-21	24-Jun-21	1494383	✓	✓	Filter	Total Metals
Manganese (Mn)	L2600818-16	TSP-TRAVEL BLANK	MET-IO3.5-MS-BU	<1.0	1.0	ug		08-Jun-21	00:00	24-Jun-21	24-Jun-21	1494383	✓	✓	Filter	Total Metals
Nickel (Ni)	L2600818-16	TSP-TRAVEL BLANK	MET-IO3.5-MS-BU	<3.0	3.0	ug		08-Jun-21	00:00	24-Jun-21	24-Jun-21	1494383	✓	✓	Filter	Total Metals
Selenium (Se)	L2600818-16	TSP-TRAVEL BLANK	MET-IO3.5-MS-BU	<10	10	ug		08-Jun-21	00:00	24-Jun-21	24-Jun-21	1494383	✓	✓	Filter	Total Metals
Vanadium (V)	L2600818-16	TSP-TRAVEL BLANK	MET-IO3.5-MS-BU	<5.0	5.0	ug		08-Jun-21	00:00	24-Jun-21	24-Jun-21	1494383	✓	✓	Filter	Total Metals
Zinc (Zn)	L2600818-16	TSP-TRAVEL BLANK	MET-IO3.5-MS-BU	5.4	5.0	ug		08-Jun-21	00:00	24-Jun-21	24-Jun-21	1494383	✓	✓	Filter	Total Metals
Particulates (Filter)																
Total particulate	L2600818-17	SOUTH-PM2.5-361	PART-M212 F-GRAV-BU	<15	15	ug		04-May-21	00:00		18-Jun-21	1490802	✓	✓	Filter	Particulates
Total particulate	L2600818-18	SOUTH-PM2.5-362	PART-M212 F-GRAV-BU	22	15	ug		10-May-21	00:00		18-Jun-21	1490802	✓	✓	Filter	Particulates
Total particulate	L2600818-19	SOUTH-PM2.5-363	PART-M212 F-GRAV-BU	136	15	ug		16-May-21	00:00		18-Jun-21	1490802	✓	✓	Filter	Particulates
Total particulate	L2600818-20	SOUTH-PM2.5-364	PART-M212 F-GRAV-BU	108	15	ug		22-May-21	00:00		18-Jun-21	1490802	✓	✓	Filter	Particulates
Total particulate	L2600818-21	SOUTH-PM2.5-365	PART-M212 F-GRAV-BU	56	15	ug		28-May-21	00:00		18-Jun-21	1490802	✓	✓	Filter	Particulates
Total particulate	L2600818-22	NORTH-PM2.5-361	PART-M212 F-GRAV-BU	30	15	ug		04-May-21	00:00		18-Jun-21	1490802	✓	✓	Filter	Particulates
Total particulate	L2600818-23	NORTH-PM2.5-362	PART-M212 F-GRAV-BU	<15	15	ug		10-May-21	00:00		18-Jun-21	1490802	✓	✓	Filter	Particulates
Total particulate	L2600818-24	NORTH-PM2.5-363	PART-M212 F-GRAV-BU	105	15	ug		16-May-21	00:00		18-Jun-21	1490802	✓	✓	Filter	Particulates
Total particulate	L2600818-25	NORTH-PM2.5-364	PART-M212 F-GRAV-BU	88	15	ug		22-May-21	00:00		18-Jun-21	1490802	✓	✓	Filter	Particulates
Total particulate	L2600818-26	NORTH-PM2.5-365	PART-M212 F-GRAV-BU	40	15	ug		28-May-21	00:00		18-Jun-21	1490802	✓	✓	Filter	Particulates
Total particulate	L2600818-27	NORTHWEST-PM2.5-361	PART-M212 F-GRAV-BU	23	15	ug		04-May-21	00:00		18-Jun-21	1490802	✓	✓	Filter	Particulates
Total particulate	L2600818-28	NORTHWEST-PM2.5-362	PART-M212 F-GRAV-BU	15	15	ug		10-May-21	00:00		18-Jun-21	1490802	✓	✓	Filter	Particulates
Total particulate	L2600818-29	NORTHWEST-PM2.5-363	PART-M212 F-GRAV-BU	121	15	ug		16-May-21	00:00		18-Jun-21	1490802	✓	✓	Filter	Particulates
Total particulate	L2600818-30	NORTHWEST-PM2.5-364	PART-M212 F-GRAV-BU	103	15	ug		22-May-21	00:00		18-Jun-21	1490802	✓	✓	Filter	Particulates
Total particulate	L2600818-31	NORTHWEST-PM2.5-365	PART-M212 F-GRAV-BU	19	15	ug		28-May-21	00:00		18-Jun-21	1490802	✓	✓	Filter	Particulates
Total particulate	L2600818-32	PM2.5-TRAVEL BLANK	PART-M212 F-GRAV-BU	<15	15	ug		08-Jun-21	00:00		18-Jun-21	1490802	✓	✓	Filter	Particulates
Particulates (Dustfall)																
Fixed Dustfall	L2600818-33	NOP1-DUSTFALL-5	DUSTFALLS-ALL-DM2-VA	2.10	0.11	mg/dm2.day		31-May-21	00:00		29-Jun-21	1497132	✓	✓	Dustfall	Particulates
Volatile Dustfall	L2600818-33	NOP1-DUSTFALL-5	DUSTFALLS-ALL-DM2-VA	0.40	0.11	mg/dm2.day		31-May-21	00:00		29-Jun-21	1497132	✓	✓	Dustfall	Particulates
Total Dustfall	L2600818-33	NOP1-DUSTFALL-5	DUSTFALLS-ALL-DM2-VA	2.50	0.11	mg/dm2.day		31-May-21	00:00		29-Jun-21	1497132	✓	✓	Dustfall	Particulates
Fixed Insoluble Dustfall	L2600818-33	NOP1-DUSTFALL-5	DUSTFALLS-ALL-DM2-VA	1.90	0.11	mg/dm2.day		31-May-21	00:00		29-Jun-21	1497132	✓	✓	Dustfall	Particulates
Volatile Insoluble Dustfall	L2600818-33	NOP1-DUSTFALL-5	DUSTFALLS-ALL-DM2-VA	<0.11	0.11	mg/dm2.day		31-May-21	00:00		29-Jun-21	1497132	✓	✓	Dustfall	Particulates
Total Insoluble Dustfall	L2600818-33	NOP1-DUSTFALL-5	DUSTFALLS-ALL-DM2-VA	1.96	0.11	mg/dm2.day		31-May-21	00:00		29-Jun-21	1497132	✓	✓	Dustfall	Particulates
Fixed Soluble Dustfall	L2600818-33	NOP1-DUSTFALL-5	DUSTFALLS-ALL-DM2-VA	0.20	0.11	mg/dm2.day		31-May-21	00:00		29-Jun-21	1497132	✓	✓	Dustfall	Particulates
Volatile Soluble Dustfall	L2600818-33	NOP1-DUSTFALL-5	DUSTFALLS-ALL-DM2-VA	0.34	0.11	mg/dm2.day		31-May-21	00:00		29-Jun-21	1497132	✓	✓	Dustfall	Particulates
Total Soluble Dustfall	L2600818-33	NOP1-DUSTFALL-5	DUSTFALLS-ALL-DM2-VA	0.54	0.11	mg/dm2.day		31-May-21	00:00		29-Jun-21	1497132	✓	✓	Dustfall	Particulates
Metals (Dustfall)																
Aluminum (Al)-Total	L2600818-33	NOP1-DUSTFALL-5	MET-DUST(DM2)-MS-VA	0.0270	0.000043	mg/dm2.day		31-May-21	00:00	30-Jun-21	02-Jul-21	1496849	×	✓	Dustfall	Metals
Antimony (Sb)-Total	L2600818-33	NOP1-DUSTFALL-5	MET-DUST(DM2)-MS-VA	0.0000032	0.0000014	mg/dm2.day		31-May-21	00:00	30-Jun-21	02-Jul-21	1496849	✓	✓	Dustfall	Metals
Arsenic (As)-Total	L2600818-33	NOP1-DUSTFALL-5	MET-DUST(DM2)-MS-VA	0.0000146	0.0000014	mg/dm2.day		31-May-21	00:00	30-Jun-21	02-Jul-21	1496849	✓	✓	Dustfall	Metals
Barium (Ba)-Total	L2600818-33	NOP1-DUSTFALL-5	MET-DUST(DM2)-MS-VA	0.000146	0.00000071	mg/dm2.day		31-May-21	00:00	30-Jun-21	02-Jul-21	1496849	×	✓	Dustfall	Metals
Beryllium (Be)-Total	L2600818-33	NOP1-DUSTFALL-5	MET-DUST(DM2)-MS-VA	<0.0000071	0.0000071	mg/dm2.day		31-May-21	00:00	30-Jun-21	02-Jul-21	1496849	✓	✓	Dustfall	Metals

Results of Analysis L2600818

Job Reference NEW GOLD RRP
Report To Sarah Flesher, New Gold Inc. Rainy River Project
Date Received 14-Jun-2021 10:00
Report Date 7-Jul-2021 14:12
Report Version 1

Parameter	ALS ID	Client Sample ID	ALS Test Code	Results	Detection Limit	Units	Qual	Date Sampled	Time Sampled	Prep Date	Analysis Date	QC Lot	QC Eval	Hold Time Eval	Matrix	Class
Bismuth (Bi)-Total	L2600818-33	NOP1-DUSTFALL-5	MET-DUST(DM2)-MS-VA	<0.0000071	0.0000071	mg/dm2.day		31-May-21	00:00	30-Jun-21	02-Jul-21	1496849	✓	✓	Dustfall	Metals
Boron (B)-Total	L2600818-33	NOP1-DUSTFALL-5	MET-DUST(DM2)-MS-VA	<0.00014	0.00014	mg/dm2.day		31-May-21	00:00	30-Jun-21	02-Jul-21	1496849	✓	✓	Dustfall	Metals
Cadmium (Cd)-Total	L2600818-33	NOP1-DUSTFALL-5	MET-DUST(DM2)-MS-VA	0.00000306	0.00000071	mg/dm2.day		31-May-21	00:00	30-Jun-21	02-Jul-21	1496849	✓	✓	Dustfall	Metals
Calcium (Ca)-Total	L2600818-33	NOP1-DUSTFALL-5	MET-DUST(DM2)-MS-VA	0.0646	0.00028	mg/dm2.day		31-May-21	00:00	30-Jun-21	02-Jul-21	1496849	×	✓	Dustfall	Metals
Chromium (Cr)-Total	L2600818-33	NOP1-DUSTFALL-5	MET-DUST(DM2)-MS-VA	0.0000340	0.0000071	mg/dm2.day		31-May-21	00:00	30-Jun-21	02-Jul-21	1496849	✓	✓	Dustfall	Metals
Cobalt (Co)-Total	L2600818-33	NOP1-DUSTFALL-5	MET-DUST(DM2)-MS-VA	0.0000065	0.0000014	mg/dm2.day		31-May-21	00:00	30-Jun-21	02-Jul-21	1496849	✓	✓	Dustfall	Metals
Copper (Cu)-Total	L2600818-33	NOP1-DUSTFALL-5	MET-DUST(DM2)-MS-VA	0.0000869	0.0000071	mg/dm2.day		31-May-21	00:00	30-Jun-21	02-Jul-21	1496849	✓	✓	Dustfall	Metals
Iron (Fe)-Total	L2600818-33	NOP1-DUSTFALL-5	MET-DUST(DM2)-MS-VA	0.0225	0.00043	mg/dm2.day		31-May-21	00:00	30-Jun-21	02-Jul-21	1496849	✓	✓	Dustfall	Metals
Lead (Pb)-Total	L2600818-33	NOP1-DUSTFALL-5	MET-DUST(DM2)-MS-VA	0.000186	0.00000071	mg/dm2.day		31-May-21	00:00	30-Jun-21	02-Jul-21	1496849	✓	✓	Dustfall	Metals
Lithium (Li)-Total	L2600818-33	NOP1-DUSTFALL-5	MET-DUST(DM2)-MS-VA	<0.000071	0.000071	mg/dm2.day		31-May-21	00:00	30-Jun-21	02-Jul-21	1496849	✓	✓	Dustfall	Metals
Magnesium (Mg)-Total	L2600818-33	NOP1-DUSTFALL-5	MET-DUST(DM2)-MS-VA	0.0153	0.000071	mg/dm2.day		31-May-21	00:00	30-Jun-21	02-Jul-21	1496849	✓	✓	Dustfall	Metals
Manganese (Mn)-Total	L2600818-33	NOP1-DUSTFALL-5	MET-DUST(DM2)-MS-VA	0.00147	0.0000014	mg/dm2.day		31-May-21	00:00	30-Jun-21	02-Jul-21	1496849	✓	✓	Dustfall	Metals
Molybdenum (Mo)-Total	L2600818-33	NOP1-DUSTFALL-5	MET-DUST(DM2)-MS-VA	<0.0000043	0.0000043	mg/dm2.day	DLB	31-May-21	00:00	30-Jun-21	02-Jul-21	1496849	×	✓	Dustfall	Metals
Nickel (Ni)-Total	L2600818-33	NOP1-DUSTFALL-5	MET-DUST(DM2)-MS-VA	0.0000272	0.0000071	mg/dm2.day		31-May-21	00:00	30-Jun-21	02-Jul-21	1496849	✓	✓	Dustfall	Metals
Phosphorus (P)-Total	L2600818-33	NOP1-DUSTFALL-5	MET-DUST(DM2)-MS-VA	0.00227	0.00071	mg/dm2.day		31-May-21	00:00	30-Jun-21	02-Jul-21	1496849	✓	✓	Dustfall	Metals
Potassium (K)-Total	L2600818-33	NOP1-DUSTFALL-5	MET-DUST(DM2)-MS-VA	0.0100	0.00071	mg/dm2.day		31-May-21	00:00	30-Jun-21	02-Jul-21	1496849	✓	✓	Dustfall	Metals
Selenium (Se)-Total	L2600818-33	NOP1-DUSTFALL-5	MET-DUST(DM2)-MS-VA	<0.000014	0.000014	mg/dm2.day		31-May-21	00:00	30-Jun-21	02-Jul-21	1496849	✓	✓	Dustfall	Metals
Silicon (Si)-Total	L2600818-33	NOP1-DUSTFALL-5	MET-DUST(DM2)-MS-VA	0.0328	0.00071	mg/dm2.day		31-May-21	00:00	30-Jun-21	02-Jul-21	1496849	✓	✓	Dustfall	Metals
Silver (Ag)-Total	L2600818-33	NOP1-DUSTFALL-5	MET-DUST(DM2)-MS-VA	0.00000895	0.00000014	mg/dm2.day		31-May-21	00:00	30-Jun-21	02-Jul-21	1496849	×	✓	Dustfall	Metals
Sodium (Na)-Total	L2600818-33	NOP1-DUSTFALL-5	MET-DUST(DM2)-MS-VA	0.00383	0.00071	mg/dm2.day		31-May-21	00:00	30-Jun-21	02-Jul-21	1496849	✓	✓	Dustfall	Metals
Strontium (Sr)-Total	L2600818-33	NOP1-DUSTFALL-5	MET-DUST(DM2)-MS-VA	0.000149	0.0000014	mg/dm2.day		31-May-21	00:00	30-Jun-21	02-Jul-21	1496849	✓	✓	Dustfall	Metals
Thallium (Tl)-Total	L2600818-33	NOP1-DUSTFALL-5	MET-DUST(DM2)-MS-VA	<0.0000014	0.0000014	mg/dm2.day		31-May-21	00:00	30-Jun-21	02-Jul-21	1496849	✓	✓	Dustfall	Metals
Tin (Sn)-Total	L2600818-33	NOP1-DUSTFALL-5	MET-DUST(DM2)-MS-VA	<0.0000014	0.0000014	mg/dm2.day		31-May-21	00:00	30-Jun-21	02-Jul-21	1496849	✓	✓	Dustfall	Metals
Titanium (Ti)-Total	L2600818-33	NOP1-DUSTFALL-5	MET-DUST(DM2)-MS-VA	0.00044	0.00014	mg/dm2.day		31-May-21	00:00	30-Jun-21	02-Jul-21	1496849	✓	✓	Dustfall	Metals
Uranium (U)-Total	L2600818-33	NOP1-DUSTFALL-5	MET-DUST(DM2)-MS-VA	0.00000061	0.00000014	mg/dm2.day		31-May-21	00:00	30-Jun-21	02-Jul-21	1496849	✓	✓	Dustfall	Metals
Vanadium (V)-Total	L2600818-33	NOP1-DUSTFALL-5	MET-DUST(DM2)-MS-VA	0.000038	0.000014	mg/dm2.day		31-May-21	00:00	30-Jun-21	02-Jul-21	1496849	✓	✓	Dustfall	Metals
Zinc (Zn)-Total	L2600818-33	NOP1-DUSTFALL-5	MET-DUST(DM2)-MS-VA	0.000803	0.000043	mg/dm2.day		31-May-21	00:00	30-Jun-21	02-Jul-21	1496849	✓	✓	Dustfall	Metals
Particulates (Dustfall)																
Fixed Dustfall	L2600818-34	CP1-DUSTFALL-5	DUSTFALLS-ALL-DM2-VA	2.87	0.11	mg/dm2.day		31-May-21	00:00		29-Jun-21	1497132	✓	✓	Dustfall	Particulates
Volatile Dustfall	L2600818-34	CP1-DUSTFALL-5	DUSTFALLS-ALL-DM2-VA	6.26	0.11	mg/dm2.day		31-May-21	00:00		29-Jun-21	1497132	✓	✓	Dustfall	Particulates
Total Dustfall	L2600818-34	CP1-DUSTFALL-5	DUSTFALLS-ALL-DM2-VA	9.13	0.11	mg/dm2.day		31-May-21	00:00		29-Jun-21	1497132	✓	✓	Dustfall	Particulates
Fixed Insoluble Dustfall	L2600818-34	CP1-DUSTFALL-5	DUSTFALLS-ALL-DM2-VA	1.83	0.11	mg/dm2.day		31-May-21	00:00		29-Jun-21	1497132	✓	✓	Dustfall	Particulates
Volatile Insoluble Dustfall	L2600818-34	CP1-DUSTFALL-5	DUSTFALLS-ALL-DM2-VA	3.26	0.11	mg/dm2.day		31-May-21	00:00		29-Jun-21	1497132	✓	✓	Dustfall	Particulates
Total Insoluble Dustfall	L2600818-34	CP1-DUSTFALL-5	DUSTFALLS-ALL-DM2-VA	5.09	0.11	mg/dm2.day		31-May-21	00:00		29-Jun-21	1497132	✓	✓	Dustfall	Particulates
Fixed Soluble Dustfall	L2600818-34	CP1-DUSTFALL-5	DUSTFALLS-ALL-DM2-VA	1.03	0.11	mg/dm2.day		31-May-21	00:00		29-Jun-21	1497132	✓	✓	Dustfall	Particulates
Volatile Soluble Dustfall	L2600818-34	CP1-DUSTFALL-5	DUSTFALLS-ALL-DM2-VA	3.01	0.11	mg/dm2.day		31-May-21	00:00		29-Jun-21	1497132	✓	✓	Dustfall	Particulates
Total Soluble Dustfall	L2600818-34	CP1-DUSTFALL-5	DUSTFALLS-ALL-DM2-VA	4.04	0.11	mg/dm2.day		31-May-21	00:00		29-Jun-21	1497132	✓	✓	Dustfall	Particulates
Metals (Dustfall)																
Aluminum (Al)-Total	L2600818-34	CP1-DUSTFALL-5	MET-DUST(DM2)-MS-VA	0.0150	0.000043	mg/dm2.day		31-May-21	00:00	30-Jun-21	02-Jul-21	1496849	×	✓	Dustfall	Metals
Antimony (Sb)-Total	L2600818-34	CP1-DUSTFALL-5	MET-DUST(DM2)-MS-VA	0.0000020	0.0000014	mg/dm2.day		31-May-21	00:00	30-Jun-21	02-Jul-21	1496849	✓	✓	Dustfall	Metals
Arsenic (As)-Total	L2600818-34	CP1-DUSTFALL-5	MET-DUST(DM2)-MS-VA	0.0000160	0.0000014	mg/dm2.day		31-May-21	00:00	30-Jun-21	02-Jul-21	1496849	✓	✓	Dustfall	Metals
Barium (Ba)-Total	L2600818-34	CP1-DUSTFALL-5	MET-DUST(DM2)-MS-VA	0.000219	0.00000071	mg/dm2.day		31-May-21	00:00	30-Jun-21	02-Jul-21	1496849	×	✓	Dustfall	Metals
Beryllium (Be)-Total	L2600818-34	CP1-DUSTFALL-5	MET-DUST(DM2)-MS-VA	<0.0000071	0.0000071	mg/dm2.day		31-May-21	00:00	30-Jun-21	02-Jul-21	1496849	✓	✓	Dustfall	Metals
Bismuth (Bi)-Total	L2600818-34	CP1-DUSTFALL-5	MET-DUST(DM2)-MS-VA	<0.0000071	0.0000071	mg/dm2.day		31-May-21	00:00	30-Jun-21	02-Jul-21	1496849	✓	✓	Dustfall	Metals
Boron (B)-Total	L2600818-34	CP1-DUSTFALL-5	MET-DUST(DM2)-MS-VA	<0.00014	0.00014	mg/dm2.day		31-May-21	00:00	30-Jun-21	02-Jul-21	1496849	✓	✓	Dustfall	Metals
Cadmium (Cd)-Total	L2600818-34	CP1-DUSTFALL-5	MET-DUST(DM2)-MS-VA	0.00000383	0.00000071	mg/dm2.day		31-May-21	00:00	30-Jun-21	02-Jul-21	1496849	✓	✓	Dustfall	Metals
Calcium (Ca)-Total	L2600818-34	CP1-DUSTFALL-5	MET-DUST(DM2)-MS-VA	0.105	0.00028	mg/dm2.day		31-May-21	00:00	30-Jun-21	02-Jul-21	1496849	×	✓	Dustfall	Metals
Chromium (Cr)-Total	L2600818-34	CP1-DUSTFALL-5	MET-DUST(DM2)-MS-VA	0.0000326	0.0000071	mg/dm2.day		31-May-21	00:00	30-Jun-21	02-Jul-21	1496849	✓	✓	Dustfall	Metals
Cobalt (Co)-Total	L2600818-34	CP1-DUSTFALL-5	MET-DUST(DM2)-MS-VA	0.0000193	0.0000014	mg/dm2.day		31-May-21	00:00	30-Jun-21	02-Jul-21	1496849	✓	✓	Dustfall	Metals
Copper (Cu)-Total	L2600818-34	CP1-DUSTFALL-5	MET-DUST(DM2)-MS-VA	0.000567	0.0000071	mg/dm2.day		31-May-21	00:00	30-Jun-21	02-Jul-21	1496849	✓	✓	Dustfall	Metals
Iron (Fe)-Total	L2600818-34	CP1-DUSTFALL-5	MET-DUST(DM2)-MS-VA	0.0200	0.00043	mg/dm2.day		31-May-21	00:00	30-Jun-21	02-Jul-21	1496849	✓	✓	Dustfall	Metals
Lead (Pb)-Total	L2600818-34	CP1-DUSTFALL-5	MET-DUST(DM2)-MS-VA	0.0000256	0.00000071	mg/dm2.day		31-May-21	00:00	30-Jun-21	02-Jul-21	1496849	✓	✓	Dustfall	Metals
Lithium (Li)-Total	L2600818-34	CP1-DUSTFALL-5	MET-DUST(DM2)-MS-VA	<0.000071	0.000071	mg/dm2.day		31-May-21	00:00	30-Jun-21	02-Jul-21	1496849	✓	✓	Dustfall	Metals
Magnesium (Mg)-Total	L2600818-34	CP1-DUSTFALL-5	MET-DUST(DM2)-MS-VA	0.0570	0.000071	mg/dm2.day		31-May-21	00:00	30-Jun-21	02-Jul-21	1496849	✓	✓	Dustfall	Metals
Manganese (Mn)-Total	L2600818-34	CP1-DUSTFALL-5	MET-DUST(DM2)-MS-VA	0.00237	0.0000014	mg/dm2.day		31-May-21	00:00	30-Jun-21	02-Jul-21	1496849	✓	✓	Dustfall	Metals
Molybdenum (Mo)-Total	L2600818-34	CP1-DUSTFALL-5	MET-DUST(DM2)-MS-VA	0.0000281	0.00000071	mg/dm2.day		31-May-21	00:00	30-Jun-21	02-Jul-21	1496849	×	✓	Dustfall	Metals
Nickel (Ni)-Total	L2600818-34	CP1-DUSTFALL-5	MET-DUST(DM2)-MS-VA	0.000104	0.0000071	mg/dm2.day		31-May-21	00:00	30-Jun-21	02-Jul-21	1496849	✓	✓	Dustfall	Metals
Phosphorus (P)-Total	L2600818-34	CP1-DUSTFALL-5	MET-DUST(DM2)-MS-VA	0.162	0.00071	mg/dm2.day		31-May-21	00:00	30-Jun-21	02-Jul-21	1496849	✓	✓	Dustfall	Metals
Potassium (K)-Total	L2600818-34	CP1-DUSTFALL-5	MET-DUST(DM2)-MS-VA	0.276	0.00071	mg/dm2.day		31-May-21	00:00	30-Jun-21	02-Jul-21	1496849	✓	✓	Dustfall	Metals
Selenium (Se)-Total	L2600818-34	CP1-DUSTFALL-5	MET-DUST(DM2)-MS-VA	0.000018	0.000014	mg/dm2.day		31-May-21	00:00	30-Jun-21	02-Jul-21	1496849	✓	✓	Dustfall	Metals
Silicon (Si)-Total	L2600818-34	CP1-DUSTFALL-5	MET-DUST(DM2)-MS-VA	0.0373	0.00071	mg/dm2.day		31-May-21	00:00	30-Jun-21	02-Jul-21	1496849	✓	✓	Dustfall	Metals
Silver (Ag)-Total	L2600818-34	CP1-DUSTFALL-5	MET-DUST(DM2)-MS-VA	0.00000117	0.00000014	mg/dm2.day		31-May-21	00:00	30-Jun-21	02-Jul-21	1496849	✓	✓	Dustfall	Metals
Sodium (Na)-Total	L2600818-34	CP1-DUSTFALL-5	MET-DUST(DM2)-MS-VA	0.0383	0.00071	mg/dm2.day		31-May-21	00:00	30-Jun-21	02-Jul-21	1496849	✓	✓	Dustfall	Metals
Strontium (Sr)-Total	L2600818-34	CP1-DUSTFALL-5	MET-DUST(DM2)-MS-VA	0.000253	0.0000014	mg/dm2.day		31-May-21	00:00	30-Jun-21	02-Jul-21	1496849	✓	✓	Dustfall	Metals
Thallium (Tl)-Total	L2600818-34	CP1-DUSTFALL-5	MET-DUST(DM2)-MS-VA	<0.0000014	0.0000014	mg/dm2.day		31-May-21	00:00	30-Jun-21	02-Jul-21	1496849	✓	✓	Dustfall	Metals
Tin (Sn)-Total	L2600818-34	CP1-DUSTFALL-5	MET-DUST(DM2)-MS-VA	0.0000018	0.0000014	mg/dm2.day		31-May-21	00:00	30-Jun-21	02-Jul-21	1496849	✓	✓	Dustfall	Metals
Titanium (Ti)-Total	L2600818-34	CP1-DUSTFALL-5	MET-DUST(DM2)-MS-VA	0.00041	0.00014	mg/dm2.day		31-May-21	00:00	30-Jun-21	02-Jul-21	1496849	✓	✓	Dustfall	Metals
Uranium (U)-Total	L2600818-34	CP1-DUSTFALL-5	MET-DUST(DM2)-MS-VA	0.00000591	0.00000014	mg/dm2.day		31-May-21	00:00	30-Jun-21	02-Jul-21	1496849	✓	✓	Dustfall	Metals
Vanadium (V)-Total	L2600818-34	CP1-DUSTFALL-5	MET-DUST(DM2)-MS-VA	0.000049	0.000014	mg/dm2.day		31-May-21	00:00	30-Jun-21	02-Jul-21	1496849	✓	✓	Dustfall	Metals
Zinc (Zn)-Total	L2600818-34	CP1-DUSTFALL-5	MET-DUST(DM2)-MS-VA	0.00180	0.000043	mg/dm2.day		31-May-21	00:00	30-Jun-21	02-Jul-21	1496849	✓	✓	Dustfall	Metals
Particulates (Dustfall)																
Fixed Dustfall	L2600818-35	WCP1-DUSTFALL-5	DUSTFALLS-ALL-DM2-VA	15.8	0.11	mg/dm2.day		31-May-21	00:00		29-Jun-21	1497132	✓	✓	Dustfall	Particulates
Volatile Dustfall	L2600818-35	WCP1-DUSTFALL-5	DUSTFALLS-ALL-DM2-VA	29.0	0.11	mg/dm2.day		31-May-21	00:00		29-Jun-21	1497132	✓	✓	Dustfall	Particulates
Total Dustfall	L2600818-35	WCP1-DUSTFALL-5	DUSTFALLS-ALL-DM2-VA	44.8	0.11	mg/dm2.day		31-May-21	00:00		29-Jun-21	1497132	✓	✓	Dustfall	Particulates
Fixed Insoluble Dustfall	L2600818-35	WCP1-DUSTFALL-5	DUSTFALLS-ALL-DM2-VA	7.47	0.11	mg/dm2.day		31-May-21	00:00		29-Jun-21	1497132	✓	✓	Dustfall	Particulates

Results of Analysis L2600818

Job Reference NEW GOLD RRP
Report To Sarah Flesher, New Gold Inc. Rainy River Project
Date Received 14-Jun-2021 10:00
Report Date 7-Jul-2021 14:12
Report Version 1

Parameter	ALS ID	Client Sample ID	ALS Test Code	Results	Detection Limit	Units	Qual	Date Sampled	Time Sampled	Prep Date	Analysis Date	QC Lot	QC Eval	Hold Time Eval	Matrix	Class
Volatile Insoluble Dustfall	L2600818-35	WCP1-DUSTFALL-5	DUSTFALLS-ALL-DM2-VA	11.4	0.11	mg/dm2.day		31-May-21	00:00		29-Jun-21	1497132	✓	✓	Dustfall	Particulates
Total Insoluble Dustfall	L2600818-35	WCP1-DUSTFALL-5	DUSTFALLS-ALL-DM2-VA	18.9	0.11	mg/dm2.day		31-May-21	00:00		29-Jun-21	1497132	✓	✓	Dustfall	Particulates
Fixed Soluble Dustfall	L2600818-35	WCP1-DUSTFALL-5	DUSTFALLS-ALL-DM2-VA	8.34	0.11	mg/dm2.day		31-May-21	00:00		29-Jun-21	1497132	✓	✓	Dustfall	Particulates
Volatile Soluble Dustfall	L2600818-35	WCP1-DUSTFALL-5	DUSTFALLS-ALL-DM2-VA	17.6	0.11	mg/dm2.day		31-May-21	00:00		29-Jun-21	1497132	✓	✓	Dustfall	Particulates
Total Soluble Dustfall	L2600818-35	WCP1-DUSTFALL-5	DUSTFALLS-ALL-DM2-VA	26.0	0.11	mg/dm2.day		31-May-21	00:00		29-Jun-21	1497132	✓	✓	Dustfall	Particulates
Metals (Dustfall)																
Aluminum (Al)-Total	L2600818-35	WCP1-DUSTFALL-5	MET-DUST(DM2)-MS-VA	0.0465	0.000043	mg/dm2.day		31-May-21	00:00	30-Jun-21	02-Jul-21	1496849	×	✓	Dustfall	Metals
Antimony (Sb)-Total	L2600818-35	WCP1-DUSTFALL-5	MET-DUST(DM2)-MS-VA	0.0000039	0.0000014	mg/dm2.day		31-May-21	00:00	30-Jun-21	02-Jul-21	1496849	✓	✓	Dustfall	Metals
Arsenic (As)-Total	L2600818-35	WCP1-DUSTFALL-5	MET-DUST(DM2)-MS-VA	0.0000857	0.0000014	mg/dm2.day		31-May-21	00:00	30-Jun-21	02-Jul-21	1496849	✓	✓	Dustfall	Metals
Barium (Ba)-Total	L2600818-35	WCP1-DUSTFALL-5	MET-DUST(DM2)-MS-VA	0.000601	0.00000071	mg/dm2.day		31-May-21	00:00	30-Jun-21	02-Jul-21	1496849	×	✓	Dustfall	Metals
Beryllium (Be)-Total	L2600818-35	WCP1-DUSTFALL-5	MET-DUST(DM2)-MS-VA	<0.0000071	0.0000071	mg/dm2.day		31-May-21	00:00	30-Jun-21	02-Jul-21	1496849	✓	✓	Dustfall	Metals
Bismuth (Bi)-Total	L2600818-35	WCP1-DUSTFALL-5	MET-DUST(DM2)-MS-VA	<0.0000071	0.0000071	mg/dm2.day		31-May-21	00:00	30-Jun-21	02-Jul-21	1496849	✓	✓	Dustfall	Metals
Boron (B)-Total	L2600818-35	WCP1-DUSTFALL-5	MET-DUST(DM2)-MS-VA	0.00051	0.00014	mg/dm2.day		31-May-21	00:00	30-Jun-21	02-Jul-21	1496849	✓	✓	Dustfall	Metals
Cadmium (Cd)-Total	L2600818-35	WCP1-DUSTFALL-5	MET-DUST(DM2)-MS-VA	0.0000319	0.00000071	mg/dm2.day		31-May-21	00:00	30-Jun-21	02-Jul-21	1496849	✓	✓	Dustfall	Metals
Calcium (Ca)-Total	L2600818-35	WCP1-DUSTFALL-5	MET-DUST(DM2)-MS-VA	0.678	0.00028	mg/dm2.day		31-May-21	00:00	30-Jun-21	02-Jul-21	1496849	×	✓	Dustfall	Metals
Chromium (Cr)-Total	L2600818-35	WCP1-DUSTFALL-5	MET-DUST(DM2)-MS-VA	0.0000976	0.0000071	mg/dm2.day		31-May-21	00:00	30-Jun-21	02-Jul-21	1496849	✓	✓	Dustfall	Metals
Cobalt (Co)-Total	L2600818-35	WCP1-DUSTFALL-5	MET-DUST(DM2)-MS-VA	0.0000933	0.0000014	mg/dm2.day		31-May-21	00:00	30-Jun-21	02-Jul-21	1496849	✓	✓	Dustfall	Metals
Copper (Cu)-Total	L2600818-35	WCP1-DUSTFALL-5	MET-DUST(DM2)-MS-VA	0.00279	0.0000071	mg/dm2.day		31-May-21	00:00	30-Jun-21	02-Jul-21	1496849	✓	✓	Dustfall	Metals
Iron (Fe)-Total	L2600818-35	WCP1-DUSTFALL-5	MET-DUST(DM2)-MS-VA	0.0773	0.00043	mg/dm2.day		31-May-21	00:00	30-Jun-21	02-Jul-21	1496849	✓	✓	Dustfall	Metals
Lead (Pb)-Total	L2600818-35	WCP1-DUSTFALL-5	MET-DUST(DM2)-MS-VA	0.000135	0.00000071	mg/dm2.day		31-May-21	00:00	30-Jun-21	02-Jul-21	1496849	✓	✓	Dustfall	Metals
Lithium (Li)-Total	L2600818-35	WCP1-DUSTFALL-5	MET-DUST(DM2)-MS-VA	0.000112	0.000071	mg/dm2.day		31-May-21	00:00	30-Jun-21	02-Jul-21	1496849	✓	✓	Dustfall	Metals
Magnesium (Mg)-Total	L2600818-35	WCP1-DUSTFALL-5	MET-DUST(DM2)-MS-VA	0.116	0.000071	mg/dm2.day		31-May-21	00:00	30-Jun-21	02-Jul-21	1496849	✓	✓	Dustfall	Metals
Manganese (Mn)-Total	L2600818-35	WCP1-DUSTFALL-5	MET-DUST(DM2)-MS-VA	0.00414	0.0000014	mg/dm2.day		31-May-21	00:00	30-Jun-21	02-Jul-21	1496849	✓	✓	Dustfall	Metals
Molybdenum (Mo)-Total	L2600818-35	WCP1-DUSTFALL-5	MET-DUST(DM2)-MS-VA	0.000145	0.00000071	mg/dm2.day		31-May-21	00:00	30-Jun-21	02-Jul-21	1496849	×	✓	Dustfall	Metals
Nickel (Ni)-Total	L2600818-35	WCP1-DUSTFALL-5	MET-DUST(DM2)-MS-VA	0.000182	0.0000071	mg/dm2.day		31-May-21	00:00	30-Jun-21	02-Jul-21	1496849	✓	✓	Dustfall	Metals
Phosphorus (P)-Total	L2600818-35	WCP1-DUSTFALL-5	MET-DUST(DM2)-MS-VA	1.55	0.00071	mg/dm2.day		31-May-21	00:00	30-Jun-21	02-Jul-21	1496849	✓	✓	Dustfall	Metals
Potassium (K)-Total	L2600818-35	WCP1-DUSTFALL-5	MET-DUST(DM2)-MS-VA	2.66	0.00071	mg/dm2.day		31-May-21	00:00	30-Jun-21	02-Jul-21	1496849	✓	✓	Dustfall	Metals
Selenium (Se)-Total	L2600818-35	WCP1-DUSTFALL-5	MET-DUST(DM2)-MS-VA	0.000125	0.000014	mg/dm2.day		31-May-21	00:00	30-Jun-21	02-Jul-21	1496849	✓	✓	Dustfall	Metals
Silicon (Si)-Total	L2600818-35	WCP1-DUSTFALL-5	MET-DUST(DM2)-MS-VA	0.102	0.00071	mg/dm2.day		31-May-21	00:00	30-Jun-21	02-Jul-21	1496849	✓	✓	Dustfall	Metals
Silver (Ag)-Total	L2600818-35	WCP1-DUSTFALL-5	MET-DUST(DM2)-MS-VA	0.00000896	0.00000014	mg/dm2.day		31-May-21	00:00	30-Jun-21	02-Jul-21	1496849	✓	✓	Dustfall	Metals
Sodium (Na)-Total	L2600818-35	WCP1-DUSTFALL-5	MET-DUST(DM2)-MS-VA	0.600	0.00071	mg/dm2.day		31-May-21	00:00	30-Jun-21	02-Jul-21	1496849	✓	✓	Dustfall	Metals
Strontium (Sr)-Total	L2600818-35	WCP1-DUSTFALL-5	MET-DUST(DM2)-MS-VA	0.000811	0.0000014	mg/dm2.day		31-May-21	00:00	30-Jun-21	02-Jul-21	1496849	✓	✓	Dustfall	Metals
Thallium (Tl)-Total	L2600818-35	WCP1-DUSTFALL-5	MET-DUST(DM2)-MS-VA	<0.0000014	0.0000014	mg/dm2.day		31-May-21	00:00	30-Jun-21	02-Jul-21	1496849	✓	✓	Dustfall	Metals
Tin (Sn)-Total	L2600818-35	WCP1-DUSTFALL-5	MET-DUST(DM2)-MS-VA	0.0000026	0.0000014	mg/dm2.day		31-May-21	00:00	30-Jun-21	02-Jul-21	1496849	✓	✓	Dustfall	Metals
Titanium (Ti)-Total	L2600818-35	WCP1-DUSTFALL-5	MET-DUST(DM2)-MS-VA	0.00098	0.00014	mg/dm2.day		31-May-21	00:00	30-Jun-21	02-Jul-21	1496849	✓	✓	Dustfall	Metals
Uranium (U)-Total	L2600818-35	WCP1-DUSTFALL-5	MET-DUST(DM2)-MS-VA	0.00000404	0.00000014	mg/dm2.day		31-May-21	00:00	30-Jun-21	02-Jul-21	1496849	✓	✓	Dustfall	Metals
Vanadium (V)-Total	L2600818-35	WCP1-DUSTFALL-5	MET-DUST(DM2)-MS-VA	0.000123	0.000014	mg/dm2.day		31-May-21	00:00	30-Jun-21	02-Jul-21	1496849	✓	✓	Dustfall	Metals
Zinc (Zn)-Total	L2600818-35	WCP1-DUSTFALL-5	MET-DUST(DM2)-MS-VA	0.0127	0.000043	mg/dm2.day		31-May-21	00:00	30-Jun-21	02-Jul-21	1496849	✓	✓	Dustfall	Metals
Particulates (Dustfall)																
Fixed Dustfall	L2600818-36	GH1-DUSTFALL-5	DUSTFALLS-ALL-DM2-VA	1.39	0.11	mg/dm2.day		31-May-21	00:00		29-Jun-21	1497132	✓	✓	Dustfall	Particulates
Volatile Dustfall	L2600818-36	GH1-DUSTFALL-5	DUSTFALLS-ALL-DM2-VA	2.43	0.11	mg/dm2.day		31-May-21	00:00		29-Jun-21	1497132	✓	✓	Dustfall	Particulates
Total Dustfall	L2600818-36	GH1-DUSTFALL-5	DUSTFALLS-ALL-DM2-VA	3.82	0.11	mg/dm2.day		31-May-21	00:00		29-Jun-21	1497132	✓	✓	Dustfall	Particulates
Fixed Insoluble Dustfall	L2600818-36	GH1-DUSTFALL-5	DUSTFALLS-ALL-DM2-VA	0.65	0.11	mg/dm2.day		31-May-21	00:00		29-Jun-21	1497132	✓	✓	Dustfall	Particulates
Volatile Insoluble Dustfall	L2600818-36	GH1-DUSTFALL-5	DUSTFALLS-ALL-DM2-VA	0.40	0.11	mg/dm2.day		31-May-21	00:00		29-Jun-21	1497132	✓	✓	Dustfall	Particulates
Total Insoluble Dustfall	L2600818-36	GH1-DUSTFALL-5	DUSTFALLS-ALL-DM2-VA	1.05	0.11	mg/dm2.day		31-May-21	00:00		29-Jun-21	1497132	✓	✓	Dustfall	Particulates
Fixed Soluble Dustfall	L2600818-36	GH1-DUSTFALL-5	DUSTFALLS-ALL-DM2-VA	0.74	0.11	mg/dm2.day		31-May-21	00:00		29-Jun-21	1497132	✓	✓	Dustfall	Particulates
Volatile Soluble Dustfall	L2600818-36	GH1-DUSTFALL-5	DUSTFALLS-ALL-DM2-VA	2.03	0.11	mg/dm2.day		31-May-21	00:00		29-Jun-21	1497132	✓	✓	Dustfall	Particulates
Total Soluble Dustfall	L2600818-36	GH1-DUSTFALL-5	DUSTFALLS-ALL-DM2-VA	2.76	0.11	mg/dm2.day		31-May-21	00:00		29-Jun-21	1497132	✓	✓	Dustfall	Particulates
Metals (Dustfall)																
Aluminum (Al)-Total	L2600818-36	GH1-DUSTFALL-5	MET-DUST(DM2)-MS-VA	0.00647	0.000043	mg/dm2.day		31-May-21	00:00	30-Jun-21	02-Jul-21	1496849	×	✓	Dustfall	Metals
Antimony (Sb)-Total	L2600818-36	GH1-DUSTFALL-5	MET-DUST(DM2)-MS-VA	<0.0000014	0.0000014	mg/dm2.day		31-May-21	00:00	30-Jun-21	02-Jul-21	1496849	✓	✓	Dustfall	Metals
Arsenic (As)-Total	L2600818-36	GH1-DUSTFALL-5	MET-DUST(DM2)-MS-VA	0.0000080	0.0000014	mg/dm2.day		31-May-21	00:00	30-Jun-21	02-Jul-21	1496849	✓	✓	Dustfall	Metals
Barium (Ba)-Total	L2600818-36	GH1-DUSTFALL-5	MET-DUST(DM2)-MS-VA	0.0000814	0.00000071	mg/dm2.day		31-May-21	00:00	30-Jun-21	02-Jul-21	1496849	×	✓	Dustfall	Metals
Beryllium (Be)-Total	L2600818-36	GH1-DUSTFALL-5	MET-DUST(DM2)-MS-VA	<0.0000071	0.0000071	mg/dm2.day		31-May-21	00:00	30-Jun-21	02-Jul-21	1496849	✓	✓	Dustfall	Metals
Bismuth (Bi)-Total	L2600818-36	GH1-DUSTFALL-5	MET-DUST(DM2)-MS-VA	<0.0000071	0.0000071	mg/dm2.day		31-May-21	00:00	30-Jun-21	02-Jul-21	1496849	✓	✓	Dustfall	Metals
Boron (B)-Total	L2600818-36	GH1-DUSTFALL-5	MET-DUST(DM2)-MS-VA	<0.00014	0.00014	mg/dm2.day		31-May-21	00:00	30-Jun-21	02-Jul-21	1496849	✓	✓	Dustfall	Metals
Cadmium (Cd)-Total	L2600818-36	GH1-DUSTFALL-5	MET-DUST(DM2)-MS-VA	<0.00000071	0.00000071	mg/dm2.day		31-May-21	00:00	30-Jun-21	02-Jul-21	1496849	✓	✓	Dustfall	Metals
Calcium (Ca)-Total	L2600818-36	GH1-DUSTFALL-5	MET-DUST(DM2)-MS-VA	0.113	0.00028	mg/dm2.day		31-May-21	00:00	30-Jun-21	02-Jul-21	1496849	×	✓	Dustfall	Metals
Chromium (Cr)-Total	L2600818-36	GH1-DUSTFALL-5	MET-DUST(DM2)-MS-VA	0.0000109	0.0000071	mg/dm2.day		31-May-21	00:00	30-Jun-21	02-Jul-21	1496849	✓	✓	Dustfall	Metals
Cobalt (Co)-Total	L2600818-36	GH1-DUSTFALL-5	MET-DUST(DM2)-MS-VA	0.0000098	0.0000014	mg/dm2.day		31-May-21	00:00	30-Jun-21	02-Jul-21	1496849	✓	✓	Dustfall	Metals
Copper (Cu)-Total	L2600818-36	GH1-DUSTFALL-5	MET-DUST(DM2)-MS-VA	0.000144	0.0000071	mg/dm2.day		31-May-21	00:00	30-Jun-21	02-Jul-21	1496849	✓	✓	Dustfall	Metals
Iron (Fe)-Total	L2600818-36	GH1-DUSTFALL-5	MET-DUST(DM2)-MS-VA	0.00731	0.00043	mg/dm2.day		31-May-21	00:00	30-Jun-21	02-Jul-21	1496849	✓	✓	Dustfall	Metals
Lead (Pb)-Total	L2600818-36	GH1-DUSTFALL-5	MET-DUST(DM2)-MS-VA	0.0000136	0.00000071	mg/dm2.day		31-May-21	00:00	30-Jun-21	02-Jul-21	1496849	✓	✓	Dustfall	Metals
Lithium (Li)-Total	L2600818-36	GH1-DUSTFALL-5	MET-DUST(DM2)-MS-VA	<0.000071	0.000071	mg/dm2.day		31-May-21	00:00	30-Jun-21	02-Jul-21	1496849	✓	✓	Dustfall	Metals
Magnesium (Mg)-Total	L2600818-36	GH1-DUSTFALL-5	MET-DUST(DM2)-MS-VA	0.0263	0.000071	mg/dm2.day		31-May-21	00:00	30-Jun-21	02-Jul-21	1496849	✓	✓	Dustfall	Metals
Manganese (Mn)-Total	L2600818-36	GH1-DUSTFALL-5	MET-DUST(DM2)-MS-VA	0.000177	0.0000014	mg/dm2.day		31-May-21	00:00	30-Jun-21	02-Jul-21	1496849	✓	✓	Dustfall	Metals
Molybdenum (Mo)-Total	L2600818-36	GH1-DUSTFALL-5	MET-DUST(DM2)-MS-VA	0.0000266	0.00000071	mg/dm2.day		31-May-21	00:00	30-Jun-21	02-Jul-21	1496849	×	✓	Dustfall	Metals
Nickel (Ni)-Total	L2600818-36	GH1-DUSTFALL-5	MET-DUST(DM2)-MS-VA	0.0000168	0.0000071	mg/dm2.day		31-May-21	00:00	30-Jun-21	02-Jul-21	1496849	✓	✓	Dustfall	Metals
Phosphorus (P)-Total	L2600818-36	GH1-DUSTFALL-5	MET-DUST(DM2)-MS-VA	0.150	0.00071	mg/dm2.day		31-May-21	00:00	30-Jun-21	02-Jul-21	1496849	✓	✓	Dustfall	Metals
Potassium (K)-Total	L2600818-36	GH1-DUSTFALL-5	MET-DUST(DM2)-MS-VA	0.126	0.00071	mg/dm2.day		31-May-21	00:00	30-Jun-21	02-Jul-21	1496849	✓	✓	Dustfall	Metals
Selenium (Se)-Total	L2600818-36	GH1-DUSTFALL-5	MET-DUST(DM2)-MS-VA	<0.000014	0.000014	mg/dm2.day		31-May-21	00:00	30-Jun-21	02-Jul-21	1496849	✓	✓	Dustfall	Metals
Silicon (Si)-Total	L2600818-36	GH1-DUSTFALL-5	MET-DUST(DM2)-MS-VA	0.0138	0.00071	mg/dm2.day		31-May-21	00:00	30-Jun-21	02-Jul-21	1496849	✓	✓	Dustfall	Metals
Silver (Ag)-Total	L2600818-36	GH1-DUSTFALL-5	MET-DUST(DM2)-MS-VA	0.00000033	0.00000014	mg/dm2.day		31-May-21	00:00	30-Jun-21	02-Jul-21	1496849	✓	✓	Dustfall	Metals
Sodium (Na)-Total	L2600818-36	GH1-DUSTFALL-5	MET-DUST(DM2)-MS-VA	0.0388	0.00071	mg/dm2.day		31-May-21	00:00	30-Jun-21	02-Jul-21	1496849	✓	✓	Dustfall	Metals
Strontium (Sr)-Total	L2600818-36	GH1-DUSTFALL-5	MET-DUST(DM2)-MS-VA	0.000115	0.0000014	mg/dm2.day		31-May-21	00:00	30-Jun-21	02-Jul-21	1496849	✓	✓	Dustfall	Metals

Results of Analysis L2600818

Job Reference NEW GOLD RRP
Report To Sarah Flesher, New Gold Inc. Rainy River Project
Date Received 14-Jun-2021 10:00
Report Date 7-Jul-2021 14:12
Report Version 1

Parameter	ALS ID	Client Sample ID	ALS Test Code	Results	Detection Limit	Units	Qual	Date Sampled	Time Sampled	Prep Date	Analysis Date	QC Lot	QC Eval	Hold Time Eval	Matrix	Class
Thallium (Tl)-Total	L2600818-36	GH1-DUSTFALL-5	MET-DUST(DM2)-MS-VA	<0.0000014	0.0000014	mg/dm2.day		31-May-21	00:00	30-Jun-21	02-Jul-21	1496849	✓	✓	Dustfall	Metals
Tin (Sn)-Total	L2600818-36	GH1-DUSTFALL-5	MET-DUST(DM2)-MS-VA	<0.0000014	0.0000014	mg/dm2.day		31-May-21	00:00	30-Jun-21	02-Jul-21	1496849	✓	✓	Dustfall	Metals
Titanium (Ti)-Total	L2600818-36	GH1-DUSTFALL-5	MET-DUST(DM2)-MS-VA	0.00018	0.00014	mg/dm2.day		31-May-21	00:00	30-Jun-21	02-Jul-21	1496849	✓	✓	Dustfall	Metals
Uranium (U)-Total	L2600818-36	GH1-DUSTFALL-5	MET-DUST(DM2)-MS-VA	0.00000039	0.00000014	mg/dm2.day		31-May-21	00:00	30-Jun-21	02-Jul-21	1496849	✓	✓	Dustfall	Metals
Vanadium (V)-Total	L2600818-36	GH1-DUSTFALL-5	MET-DUST(DM2)-MS-VA	0.000015	0.000014	mg/dm2.day		31-May-21	00:00	30-Jun-21	02-Jul-21	1496849	✓	✓	Dustfall	Metals
Zinc (Zn)-Total	L2600818-36	GH1-DUSTFALL-5	MET-DUST(DM2)-MS-VA	0.000270	0.000043	mg/dm2.day		31-May-21	00:00	30-Jun-21	02-Jul-21	1496849	✓	✓	Dustfall	Metals
Particulates (Dustfall)																
Fixed Dustfall	L2600818-37	SPP1-DUSTFALL-22	DUSTFALLS-ALL-DM2-VA	22.9	0.43	mg/dm2.day		12-May-21	00:00		29-Jun-21	1497132	✓	✓	Dustfall	Particulates
Volatile Dustfall	L2600818-37	SPP1-DUSTFALL-22	DUSTFALLS-ALL-DM2-VA	29.1	0.43	mg/dm2.day		12-May-21	00:00		29-Jun-21	1497132	✓	✓	Dustfall	Particulates
Total Dustfall	L2600818-37	SPP1-DUSTFALL-22	DUSTFALLS-ALL-DM2-VA	52.0	0.43	mg/dm2.day		12-May-21	00:00		29-Jun-21	1497132	✓	✓	Dustfall	Particulates
Fixed Insoluble Dustfall	L2600818-37	SPP1-DUSTFALL-22	DUSTFALLS-ALL-DM2-VA	15.7	0.43	mg/dm2.day		12-May-21	00:00		29-Jun-21	1497132	✓	✓	Dustfall	Particulates
Volatile Insoluble Dustfall	L2600818-37	SPP1-DUSTFALL-22	DUSTFALLS-ALL-DM2-VA	20.0	0.43	mg/dm2.day		12-May-21	00:00		29-Jun-21	1497132	✓	✓	Dustfall	Particulates
Total Insoluble Dustfall	L2600818-37	SPP1-DUSTFALL-22	DUSTFALLS-ALL-DM2-VA	35.6	0.43	mg/dm2.day		12-May-21	00:00		29-Jun-21	1497132	✓	✓	Dustfall	Particulates
Fixed Soluble Dustfall	L2600818-37	SPP1-DUSTFALL-22	DUSTFALLS-ALL-DM2-VA	7.28	0.43	mg/dm2.day		12-May-21	00:00		29-Jun-21	1497132	✓	✓	Dustfall	Particulates
Volatile Soluble Dustfall	L2600818-37	SPP1-DUSTFALL-22	DUSTFALLS-ALL-DM2-VA	9.14	0.43	mg/dm2.day		12-May-21	00:00		29-Jun-21	1497132	✓	✓	Dustfall	Particulates
Total Soluble Dustfall	L2600818-37	SPP1-DUSTFALL-22	DUSTFALLS-ALL-DM2-VA	16.4	0.43	mg/dm2.day		12-May-21	00:00		29-Jun-21	1497132	✓	✓	Dustfall	Particulates
Metals (Dustfall)																
Aluminum (Al)-Total	L2600818-37	SPP1-DUSTFALL-22	MET-DUST(DM2)-MS-VA	0.129	0.00020	mg/dm2.day		12-May-21	00:00	30-Jun-21	02-Jul-21	1496849	×	✓	Dustfall	Metals
Antimony (Sb)-Total	L2600818-37	SPP1-DUSTFALL-22	MET-DUST(DM2)-MS-VA	0.0000080	0.0000067	mg/dm2.day		12-May-21	00:00	30-Jun-21	02-Jul-21	1496849	✓	✓	Dustfall	Metals
Arsenic (As)-Total	L2600818-37	SPP1-DUSTFALL-22	MET-DUST(DM2)-MS-VA	0.000152	0.0000067	mg/dm2.day		12-May-21	00:00	30-Jun-21	02-Jul-21	1496849	✓	✓	Dustfall	Metals
Barium (Ba)-Total	L2600818-37	SPP1-DUSTFALL-22	MET-DUST(DM2)-MS-VA	0.00209	0.0000034	mg/dm2.day		12-May-21	00:00	30-Jun-21	02-Jul-21	1496849	×	✓	Dustfall	Metals
Beryllium (Be)-Total	L2600818-37	SPP1-DUSTFALL-22	MET-DUST(DM2)-MS-VA	<0.000034	0.000034	mg/dm2.day		12-May-21	00:00	30-Jun-21	02-Jul-21	1496849	✓	✓	Dustfall	Metals
Bismuth (Bi)-Total	L2600818-37	SPP1-DUSTFALL-22	MET-DUST(DM2)-MS-VA	<0.000034	0.000034	mg/dm2.day		12-May-21	00:00	30-Jun-21	02-Jul-21	1496849	✓	✓	Dustfall	Metals
Boron (B)-Total	L2600818-37	SPP1-DUSTFALL-22	MET-DUST(DM2)-MS-VA	<0.00067	0.00067	mg/dm2.day		12-May-21	00:00	30-Jun-21	02-Jul-21	1496849	✓	✓	Dustfall	Metals
Cadmium (Cd)-Total	L2600818-37	SPP1-DUSTFALL-22	MET-DUST(DM2)-MS-VA	0.000173	0.0000034	mg/dm2.day		12-May-21	00:00	30-Jun-21	02-Jul-21	1496849	✓	✓	Dustfall	Metals
Calcium (Ca)-Total	L2600818-37	SPP1-DUSTFALL-22	MET-DUST(DM2)-MS-VA	0.835	0.0013	mg/dm2.day		12-May-21	00:00	30-Jun-21	02-Jul-21	1496849	×	✓	Dustfall	Metals
Chromium (Cr)-Total	L2600818-37	SPP1-DUSTFALL-22	MET-DUST(DM2)-MS-VA	0.000241	0.000034	mg/dm2.day		12-May-21	00:00	30-Jun-21	02-Jul-21	1496849	✓	✓	Dustfall	Metals
Cobalt (Co)-Total	L2600818-37	SPP1-DUSTFALL-22	MET-DUST(DM2)-MS-VA	0.000120	0.0000067	mg/dm2.day		12-May-21	00:00	30-Jun-21	02-Jul-21	1496849	✓	✓	Dustfall	Metals
Copper (Cu)-Total	L2600818-37	SPP1-DUSTFALL-22	MET-DUST(DM2)-MS-VA	0.00219	0.000034	mg/dm2.day		12-May-21	00:00	30-Jun-21	02-Jul-21	1496849	✓	✓	Dustfall	Metals
Iron (Fe)-Total	L2600818-37	SPP1-DUSTFALL-22	MET-DUST(DM2)-MS-VA	0.153	0.0020	mg/dm2.day		12-May-21	00:00	30-Jun-21	02-Jul-21	1496849	✓	✓	Dustfall	Metals
Lead (Pb)-Total	L2600818-37	SPP1-DUSTFALL-22	MET-DUST(DM2)-MS-VA	0.000562	0.0000034	mg/dm2.day		12-May-21	00:00	30-Jun-21	02-Jul-21	1496849	✓	✓	Dustfall	Metals
Lithium (Li)-Total	L2600818-37	SPP1-DUSTFALL-22	MET-DUST(DM2)-MS-VA	<0.00034	0.00034	mg/dm2.day		12-May-21	00:00	30-Jun-21	02-Jul-21	1496849	✓	✓	Dustfall	Metals
Magnesium (Mg)-Total	L2600818-37	SPP1-DUSTFALL-22	MET-DUST(DM2)-MS-VA	0.349	0.00034	mg/dm2.day		12-May-21	00:00	30-Jun-21	02-Jul-21	1496849	✓	✓	Dustfall	Metals
Manganese (Mn)-Total	L2600818-37	SPP1-DUSTFALL-22	MET-DUST(DM2)-MS-VA	0.0170	0.0000067	mg/dm2.day		12-May-21	00:00	30-Jun-21	02-Jul-21	1496849	✓	✓	Dustfall	Metals
Molybdenum (Mo)-Total	L2600818-37	SPP1-DUSTFALL-22	MET-DUST(DM2)-MS-VA	0.000137	0.0000034	mg/dm2.day		12-May-21	00:00	30-Jun-21	02-Jul-21	1496849	×	✓	Dustfall	Metals
Nickel (Ni)-Total	L2600818-37	SPP1-DUSTFALL-22	MET-DUST(DM2)-MS-VA	0.000328	0.000034	mg/dm2.day		12-May-21	00:00	30-Jun-21	02-Jul-21	1496849	✓	✓	Dustfall	Metals
Phosphorus (P)-Total	L2600818-37	SPP1-DUSTFALL-22	MET-DUST(DM2)-MS-VA	1.07	0.0034	mg/dm2.day		12-May-21	00:00	30-Jun-21	02-Jul-21	1496849	✓	✓	Dustfall	Metals
Potassium (K)-Total	L2600818-37	SPP1-DUSTFALL-22	MET-DUST(DM2)-MS-VA	1.33	0.0034	mg/dm2.day		12-May-21	00:00	30-Jun-21	02-Jul-21	1496849	✓	✓	Dustfall	Metals
Selenium (Se)-Total	L2600818-37	SPP1-DUSTFALL-22	MET-DUST(DM2)-MS-VA	0.000321	0.000067	mg/dm2.day		12-May-21	00:00	30-Jun-21	02-Jul-21	1496849	✓	✓	Dustfall	Metals
Silicon (Si)-Total	L2600818-37	SPP1-DUSTFALL-22	MET-DUST(DM2)-MS-VA	0.312	0.0034	mg/dm2.day		12-May-21	00:00	30-Jun-21	02-Jul-21	1496849	✓	✓	Dustfall	Metals
Silver (Ag)-Total	L2600818-37	SPP1-DUSTFALL-22	MET-DUST(DM2)-MS-VA	0.0000133	0.00000067	mg/dm2.day		12-May-21	00:00	30-Jun-21	02-Jul-21	1496849	✓	✓	Dustfall	Metals
Sodium (Na)-Total	L2600818-37	SPP1-DUSTFALL-22	MET-DUST(DM2)-MS-VA	0.393	0.0034	mg/dm2.day		12-May-21	00:00	30-Jun-21	02-Jul-21	1496849	✓	✓	Dustfall	Metals
Strontium (Sr)-Total	L2600818-37	SPP1-DUSTFALL-22	MET-DUST(DM2)-MS-VA	0.00232	0.0000067	mg/dm2.day		12-May-21	00:00	30-Jun-21	02-Jul-21	1496849	✓	✓	Dustfall	Metals
Thallium (Tl)-Total	L2600818-37	SPP1-DUSTFALL-22	MET-DUST(DM2)-MS-VA	<0.0000067	0.0000067	mg/dm2.day		12-May-21	00:00	30-Jun-21	02-Jul-21	1496849	✓	✓	Dustfall	Metals
Tin (Sn)-Total	L2600818-37	SPP1-DUSTFALL-22	MET-DUST(DM2)-MS-VA	0.0000069	0.0000067	mg/dm2.day		12-May-21	00:00	30-Jun-21	02-Jul-21	1496849	✓	✓	Dustfall	Metals
Titanium (Ti)-Total	L2600818-37	SPP1-DUSTFALL-22	MET-DUST(DM2)-MS-VA	0.00276	0.00067	mg/dm2.day		12-May-21	00:00	30-Jun-21	02-Jul-21	1496849	✓	✓	Dustfall	Metals
Uranium (U)-Total	L2600818-37	SPP1-DUSTFALL-22	MET-DUST(DM2)-MS-VA	0.0000154	0.00000067	mg/dm2.day		12-May-21	00:00	30-Jun-21	02-Jul-21	1496849	✓	✓	Dustfall	Metals
Vanadium (V)-Total	L2600818-37	SPP1-DUSTFALL-22	MET-DUST(DM2)-MS-VA	0.000304	0.000067	mg/dm2.day		12-May-21	00:00	30-Jun-21	02-Jul-21	1496849	✓	✓	Dustfall	Metals
Zinc (Zn)-Total	L2600818-37	SPP1-DUSTFALL-22	MET-DUST(DM2)-MS-VA	0.0198	0.00020	mg/dm2.day		12-May-21	00:00	30-Jun-21	02-Jul-21	1496849	✓	✓	Dustfall	Metals
Particulates (Dustfall)																
Fixed Dustfall	L2600818-38	SPP1-DUSTFALL-23	DUSTFALLS-ALL-DM2-VA	8.43	0.43	mg/dm2.day		19-May-21	00:00		29-Jun-21	1497132	✓	✓	Dustfall	Particulates
Volatile Dustfall	L2600818-38	SPP1-DUSTFALL-23	DUSTFALLS-ALL-DM2-VA	11.0	0.43	mg/dm2.day		19-May-21	00:00		29-Jun-21	1497132	✓	✓	Dustfall	Particulates
Total Dustfall	L2600818-38	SPP1-DUSTFALL-23	DUSTFALLS-ALL-DM2-VA	19.5	0.43	mg/dm2.day		19-May-21	00:00		29-Jun-21	1497132	✓	✓	Dustfall	Particulates
Fixed Insoluble Dustfall	L2600818-38	SPP1-DUSTFALL-23	DUSTFALLS-ALL-DM2-VA	5.95	0.43	mg/dm2.day		19-May-21	00:00		29-Jun-21	1497132	✓	✓	Dustfall	Particulates
Volatile Insoluble Dustfall	L2600818-38	SPP1-DUSTFALL-23	DUSTFALLS-ALL-DM2-VA	5.74	0.43	mg/dm2.day		19-May-21	00:00		29-Jun-21	1497132	✓	✓	Dustfall	Particulates
Total Insoluble Dustfall	L2600818-38	SPP1-DUSTFALL-23	DUSTFALLS-ALL-DM2-VA	11.7	0.43	mg/dm2.day		19-May-21	00:00		29-Jun-21	1497132	✓	✓	Dustfall	Particulates
Fixed Soluble Dustfall	L2600818-38	SPP1-DUSTFALL-23	DUSTFALLS-ALL-DM2-VA	2.48	0.43	mg/dm2.day		19-May-21	00:00		29-Jun-21	1497132	✓	✓	Dustfall	Particulates
Volatile Soluble Dustfall	L2600818-38	SPP1-DUSTFALL-23	DUSTFALLS-ALL-DM2-VA	5.30	0.43	mg/dm2.day		19-May-21	00:00		29-Jun-21	1497132	✓	✓	Dustfall	Particulates
Total Soluble Dustfall	L2600818-38	SPP1-DUSTFALL-23	DUSTFALLS-ALL-DM2-VA	7.78	0.43	mg/dm2.day		19-May-21	00:00		29-Jun-21	1497132	✓	✓	Dustfall	Particulates
Metals (Dustfall)																
Aluminum (Al)-Total	L2600818-38	SPP1-DUSTFALL-23	MET-DUST(DM2)-MS-VA	0.0500	0.00019	mg/dm2.day		19-May-21	00:00	30-Jun-21	02-Jul-21	1496849	×	✓	Dustfall	Metals
Antimony (Sb)-Total	L2600818-38	SPP1-DUSTFALL-23	MET-DUST(DM2)-MS-VA	0.0000104	0.0000064	mg/dm2.day		19-May-21	00:00	30-Jun-21	02-Jul-21	1496849	✓	✓	Dustfall	Metals
Arsenic (As)-Total	L2600818-38	SPP1-DUSTFALL-23	MET-DUST(DM2)-MS-VA	0.0000607	0.0000064	mg/dm2.day		19-May-21	00:00	30-Jun-21	02-Jul-21	1496849	✓	✓	Dustfall	Metals
Barium (Ba)-Total	L2600818-38	SPP1-DUSTFALL-23	MET-DUST(DM2)-MS-VA	0.00101	0.0000032	mg/dm2.day		19-May-21	00:00	30-Jun-21	02-Jul-21	1496849	×	✓	Dustfall	Metals
Beryllium (Be)-Total	L2600818-38	SPP1-DUSTFALL-23	MET-DUST(DM2)-MS-VA	<0.000032	0.000032	mg/dm2.day		19-May-21	00:00	30-Jun-21	02-Jul-21	1496849	✓	✓	Dustfall	Metals
Bismuth (Bi)-Total	L2600818-38	SPP1-DUSTFALL-23	MET-DUST(DM2)-MS-VA	<0.000032	0.000032	mg/dm2.day		19-May-21	00:00	30-Jun-21	02-Jul-21	1496849	✓	✓	Dustfall	Metals
Boron (B)-Total	L2600818-38	SPP1-DUSTFALL-23	MET-DUST(DM2)-MS-VA	<0.00064	0.00064	mg/dm2.day		19-May-21	00:00	30-Jun-21	02-Jul-21	1496849	✓	✓	Dustfall	Metals
Cadmium (Cd)-Total	L2600818-38	SPP1-DUSTFALL-23	MET-DUST(DM2)-MS-VA	0.0000271	0.0000032	mg/dm2.day		19-May-21	00:00	30-Jun-21	02-Jul-21	1496849	✓	✓	Dustfall	Metals
Calcium (Ca)-Total	L2600818-38	SPP1-DUSTFALL-23	MET-DUST(DM2)-MS-VA	0.791	0.0013	mg/dm2.day		19-May-21	00:00	30-Jun-21	02-Jul-21	1496849	×	✓	Dustfall	Metals
Chromium (Cr)-Total	L2600818-38	SPP1-DUSTFALL-23	MET-DUST(DM2)-MS-VA	0.000096	0.000032	mg/dm2.day		19-May-21	00:00	30-Jun-21	02-Jul-21	1496849	✓	✓	Dustfall	Metals
Cobalt (Co)-Total	L2600818-38	SPP1-DUSTFALL-23	MET-DUST(DM2)-MS-VA	0.0000333	0.0000064	mg/dm2.day		19-May-21	00:00	30-Jun-21	02-Jul-21	1496849	✓	✓	Dustfall	Metals
Copper (Cu)-Total	L2600818-38	SPP1-DUSTFALL-23	MET-DUST(DM2)-MS-VA	0.00128	0.000032	mg/dm2.day		19-May-21	00:00	30-Jun-21	02-Jul-21	1496849	✓	✓	Dustfall	Metals
Iron (Fe)-Total	L2600818-38	SPP1-DUSTFALL-23	MET-DUST(DM2)-MS-VA	0.0512	0.0019	mg/dm2.day		19-May-21	00:00	30-Jun-21	02-Jul-21	1496849	✓	✓	Dustfall	Metals
Lead (Pb)-Total	L2600818-38	SPP1-DUSTFALL-23	MET-DUST(DM2)-MS-VA	0.000514	0.0000032	mg/dm2.day		19-May-21	00:00	30-Jun-21	02-Jul-21	1496849	✓	✓	Dustfall	Metals

Results of Analysis L2600818

Job Reference	NEW GOLD RRP
Report To	Sarah Flesher, New Gold Inc. Rainy River Project
Date Received	14-Jun-2021 10:00
Report Date	7-Jul-2021 14:12
Report Version	1

Parameter	ALS ID	Client Sample ID	ALS Test Code	Results	Detection Limit	Units	Qual	Date Sampled	Time Sampled	Prep Date	Analysis Date	QC Lot	QC Eval	Hold Time Eval	Matrix	Class
Lithium (Li)-Total	L2600818-38	SPP1-DUSTFALL-23	MET-DUST(DM2)-MS-VA	<0.00032	0.00032	mg/dm2.day		19-May-21	00:00	30-Jun-21	02-Jul-21	1496849	✓	✓	Dustfall	Metals
Magnesium (Mg)-Total	L2600818-38	SPP1-DUSTFALL-23	MET-DUST(DM2)-MS-VA	0.126	0.00032	mg/dm2.day		19-May-21	00:00	30-Jun-21	02-Jul-21	1496849	✓	✓	Dustfall	Metals
Manganese (Mn)-Total	L2600818-38	SPP1-DUSTFALL-23	MET-DUST(DM2)-MS-VA	0.00539	0.0000064	mg/dm2.day		19-May-21	00:00	30-Jun-21	02-Jul-21	1496849	✓	✓	Dustfall	Metals
Molybdenum (Mo)-Total	L2600818-38	SPP1-DUSTFALL-23	MET-DUST(DM2)-MS-VA	<0.000039	0.000039	mg/dm2.day	DLB	19-May-21	00:00	30-Jun-21	02-Jul-21	1496849	×	✓	Dustfall	Metals
Nickel (Ni)-Total	L2600818-38	SPP1-DUSTFALL-23	MET-DUST(DM2)-MS-VA	0.000129	0.000032	mg/dm2.day		19-May-21	00:00	30-Jun-21	02-Jul-21	1496849	✓	✓	Dustfall	Metals
Phosphorus (P)-Total	L2600818-38	SPP1-DUSTFALL-23	MET-DUST(DM2)-MS-VA	0.431	0.0032	mg/dm2.day		19-May-21	00:00	30-Jun-21	02-Jul-21	1496849	✓	✓	Dustfall	Metals
Potassium (K)-Total	L2600818-38	SPP1-DUSTFALL-23	MET-DUST(DM2)-MS-VA	0.452	0.0032	mg/dm2.day		19-May-21	00:00	30-Jun-21	02-Jul-21	1496849	✓	✓	Dustfall	Metals
Selenium (Se)-Total	L2600818-38	SPP1-DUSTFALL-23	MET-DUST(DM2)-MS-VA	<0.000064	0.000064	mg/dm2.day		19-May-21	00:00	30-Jun-21	02-Jul-21	1496849	✓	✓	Dustfall	Metals
Silicon (Si)-Total	L2600818-38	SPP1-DUSTFALL-23	MET-DUST(DM2)-MS-VA	0.0861	0.0032	mg/dm2.day		19-May-21	00:00	30-Jun-21	02-Jul-21	1496849	✓	✓	Dustfall	Metals
Silver (Ag)-Total	L2600818-38	SPP1-DUSTFALL-23	MET-DUST(DM2)-MS-VA	0.0000201	0.00000064	mg/dm2.day		19-May-21	00:00	30-Jun-21	02-Jul-21	1496849	✓	✓	Dustfall	Metals
Sodium (Na)-Total	L2600818-38	SPP1-DUSTFALL-23	MET-DUST(DM2)-MS-VA	0.230	0.0032	mg/dm2.day		19-May-21	00:00	30-Jun-21	02-Jul-21	1496849	✓	✓	Dustfall	Metals
Strontium (Sr)-Total	L2600818-38	SPP1-DUSTFALL-23	MET-DUST(DM2)-MS-VA	0.00188	0.0000064	mg/dm2.day		19-May-21	00:00	30-Jun-21	02-Jul-21	1496849	✓	✓	Dustfall	Metals
Thallium (Tl)-Total	L2600818-38	SPP1-DUSTFALL-23	MET-DUST(DM2)-MS-VA	<0.0000064	0.0000064	mg/dm2.day		19-May-21	00:00	30-Jun-21	02-Jul-21	1496849	✓	✓	Dustfall	Metals
Tin (Sn)-Total	L2600818-38	SPP1-DUSTFALL-23	MET-DUST(DM2)-MS-VA	<0.0000064	0.0000064	mg/dm2.day		19-May-21	00:00	30-Jun-21	02-Jul-21	1496849	✓	✓	Dustfall	Metals
Titanium (Ti)-Total	L2600818-38	SPP1-DUSTFALL-23	MET-DUST(DM2)-MS-VA	0.00089	0.00064	mg/dm2.day		19-May-21	00:00	30-Jun-21	02-Jul-21	1496849	✓	✓	Dustfall	Metals
Uranium (U)-Total	L2600818-38	SPP1-DUSTFALL-23	MET-DUST(DM2)-MS-VA	0.0000115	0.00000064	mg/dm2.day		19-May-21	00:00	30-Jun-21	02-Jul-21	1496849	✓	✓	Dustfall	Metals
Vanadium (V)-Total	L2600818-38	SPP1-DUSTFALL-23	MET-DUST(DM2)-MS-VA	0.000091	0.000064	mg/dm2.day		19-May-21	00:00	30-Jun-21	02-Jul-21	1496849	✓	✓	Dustfall	Metals
Zinc (Zn)-Total	L2600818-38	SPP1-DUSTFALL-23	MET-DUST(DM2)-MS-VA	0.00510	0.00019	mg/dm2.day		19-May-21	00:00	30-Jun-21	02-Jul-21	1496849	✓	✓	Dustfall	Metals
Particulates (Dustfall)																
Fixed Dustfall	L2600818-39	SPP1-DUSTFALL-24	DUSTFALLS-ALL-DM2-VA	4.65	0.43	mg/dm2.day		26-May-21	00:00		29-Jun-21	1497132	✓	✓	Dustfall	Particulates
Volatile Dustfall	L2600818-39	SPP1-DUSTFALL-24	DUSTFALLS-ALL-DM2-VA	10.1	0.43	mg/dm2.day		26-May-21	00:00		29-Jun-21	1497132	✓	✓	Dustfall	Particulates
Total Dustfall	L2600818-39	SPP1-DUSTFALL-24	DUSTFALLS-ALL-DM2-VA	14.8	0.43	mg/dm2.day		26-May-21	00:00		29-Jun-21	1497132	✓	✓	Dustfall	Particulates
Fixed Insoluble Dustfall	L2600818-39	SPP1-DUSTFALL-24	DUSTFALLS-ALL-DM2-VA	1.77	0.43	mg/dm2.day		26-May-21	00:00		29-Jun-21	1497132	✓	✓	Dustfall	Particulates
Volatile Insoluble Dustfall	L2600818-39	SPP1-DUSTFALL-24	DUSTFALLS-ALL-DM2-VA	4.25	0.43	mg/dm2.day		26-May-21	00:00		29-Jun-21	1497132	✓	✓	Dustfall	Particulates
Total Insoluble Dustfall	L2600818-39	SPP1-DUSTFALL-24	DUSTFALLS-ALL-DM2-VA	6.03	0.43	mg/dm2.day		26-May-21	00:00		29-Jun-21	1497132	✓	✓	Dustfall	Particulates
Fixed Soluble Dustfall	L2600818-39	SPP1-DUSTFALL-24	DUSTFALLS-ALL-DM2-VA	2.87	0.43	mg/dm2.day		26-May-21	00:00		29-Jun-21	1497132	✓	✓	Dustfall	Particulates
Volatile Soluble Dustfall	L2600818-39	SPP1-DUSTFALL-24	DUSTFALLS-ALL-DM2-VA	5.86	0.43	mg/dm2.day		26-May-21	00:00		29-Jun-21	1497132	✓	✓	Dustfall	Particulates
Total Soluble Dustfall	L2600818-39	SPP1-DUSTFALL-24	DUSTFALLS-ALL-DM2-VA	8.74	0.43	mg/dm2.day		26-May-21	00:00		29-Jun-21	1497132	✓	✓	Dustfall	Particulates
Metals (Dustfall)																
Aluminum (Al)-Total	L2600818-39	SPP1-DUSTFALL-24	MET-DUST(DM2)-MS-VA	0.0240	0.00024	mg/dm2.day		26-May-21	00:00	30-Jun-21	02-Jul-21	1496849	×	✓	Dustfall	Metals
Antimony (Sb)-Total	L2600818-39	SPP1-DUSTFALL-24	MET-DUST(DM2)-MS-VA	<0.0000080	0.0000080	mg/dm2.day		26-May-21	00:00	30-Jun-21	02-Jul-21	1496849	✓	✓	Dustfall	Metals
Arsenic (As)-Total	L2600818-39	SPP1-DUSTFALL-24	MET-DUST(DM2)-MS-VA	0.0000223	0.0000080	mg/dm2.day		26-May-21	00:00	30-Jun-21	02-Jul-21	1496849	✓	✓	Dustfall	Metals
Barium (Ba)-Total	L2600818-39	SPP1-DUSTFALL-24	MET-DUST(DM2)-MS-VA	0.000375	0.0000040	mg/dm2.day		26-May-21	00:00	30-Jun-21	02-Jul-21	1496849	×	✓	Dustfall	Metals
Beryllium (Be)-Total	L2600818-39	SPP1-DUSTFALL-24	MET-DUST(DM2)-MS-VA	<0.000040	0.000040	mg/dm2.day		26-May-21	00:00	30-Jun-21	02-Jul-21	1496849	✓	✓	Dustfall	Metals
Bismuth (Bi)-Total	L2600818-39	SPP1-DUSTFALL-24	MET-DUST(DM2)-MS-VA	<0.000040	0.000040	mg/dm2.day		26-May-21	00:00	30-Jun-21	02-Jul-21	1496849	✓	✓	Dustfall	Metals
Boron (B)-Total	L2600818-39	SPP1-DUSTFALL-24	MET-DUST(DM2)-MS-VA	<0.00080	0.00080	mg/dm2.day		26-May-21	00:00	30-Jun-21	02-Jul-21	1496849	✓	✓	Dustfall	Metals
Cadmium (Cd)-Total	L2600818-39	SPP1-DUSTFALL-24	MET-DUST(DM2)-MS-VA	0.0000090	0.0000040	mg/dm2.day		26-May-21	00:00	30-Jun-21	02-Jul-21	1496849	✓	✓	Dustfall	Metals
Calcium (Ca)-Total	L2600818-39	SPP1-DUSTFALL-24	MET-DUST(DM2)-MS-VA	0.467	0.0016	mg/dm2.day		26-May-21	00:00	30-Jun-21	02-Jul-21	1496849	×	✓	Dustfall	Metals
Chromium (Cr)-Total	L2600818-39	SPP1-DUSTFALL-24	MET-DUST(DM2)-MS-VA	0.000057	0.000040	mg/dm2.day		26-May-21	00:00	30-Jun-21	02-Jul-21	1496849	✓	✓	Dustfall	Metals
Cobalt (Co)-Total	L2600818-39	SPP1-DUSTFALL-24	MET-DUST(DM2)-MS-VA	0.0000136	0.0000080	mg/dm2.day		26-May-21	00:00	30-Jun-21	02-Jul-21	1496849	✓	✓	Dustfall	Metals
Copper (Cu)-Total	L2600818-39	SPP1-DUSTFALL-24	MET-DUST(DM2)-MS-VA	0.000851	0.000040	mg/dm2.day		26-May-21	00:00	30-Jun-21	02-Jul-21	1496849	✓	✓	Dustfall	Metals
Iron (Fe)-Total	L2600818-39	SPP1-DUSTFALL-24	MET-DUST(DM2)-MS-VA	0.0287	0.0024	mg/dm2.day		26-May-21	00:00	30-Jun-21	02-Jul-21	1496849	✓	✓	Dustfall	Metals
Lead (Pb)-Total	L2600818-39	SPP1-DUSTFALL-24	MET-DUST(DM2)-MS-VA	0.000182	0.0000040	mg/dm2.day		26-May-21	00:00	30-Jun-21	02-Jul-21	1496849	✓	✓	Dustfall	Metals
Lithium (Li)-Total	L2600818-39	SPP1-DUSTFALL-24	MET-DUST(DM2)-MS-VA	<0.00040	0.00040	mg/dm2.day		26-May-21	00:00	30-Jun-21	02-Jul-21	1496849	✓	✓	Dustfall	Metals
Magnesium (Mg)-Total	L2600818-39	SPP1-DUSTFALL-24	MET-DUST(DM2)-MS-VA	0.0823	0.00040	mg/dm2.day		26-May-21	00:00	30-Jun-21	02-Jul-21	1496849	✓	✓	Dustfall	Metals
Manganese (Mn)-Total	L2600818-39	SPP1-DUSTFALL-24	MET-DUST(DM2)-MS-VA	0.00288	0.0000080	mg/dm2.day		26-May-21	00:00	30-Jun-21	02-Jul-21	1496849	✓	✓	Dustfall	Metals
Molybdenum (Mo)-Total	L2600818-39	SPP1-DUSTFALL-24	MET-DUST(DM2)-MS-VA	<0.000048	0.000048	mg/dm2.day	DLB	26-May-21	00:00	30-Jun-21	02-Jul-21	1496849	×	✓	Dustfall	Metals
Nickel (Ni)-Total	L2600818-39	SPP1-DUSTFALL-24	MET-DUST(DM2)-MS-VA	0.000092	0.000040	mg/dm2.day		26-May-21	00:00	30-Jun-21	02-Jul-21	1496849	✓	✓	Dustfall	Metals
Phosphorus (P)-Total	L2600818-39	SPP1-DUSTFALL-24	MET-DUST(DM2)-MS-VA	0.343	0.0040	mg/dm2.day		26-May-21	00:00	30-Jun-21	02-Jul-21	1496849	✓	✓	Dustfall	Metals
Potassium (K)-Total	L2600818-39	SPP1-DUSTFALL-24	MET-DUST(DM2)-MS-VA	0.471	0.0040	mg/dm2.day		26-May-21	00:00	30-Jun-21	02-Jul-21	1496849	✓	✓	Dustfall	Metals
Selenium (Se)-Total	L2600818-39	SPP1-DUSTFALL-24	MET-DUST(DM2)-MS-VA	<0.000080	0.000080	mg/dm2.day		26-May-21	00:00	30-Jun-21	02-Jul-21	1496849	✓	✓	Dustfall	Metals
Silicon (Si)-Total	L2600818-39	SPP1-DUSTFALL-24	MET-DUST(DM2)-MS-VA	0.0453	0.0040	mg/dm2.day		26-May-21	00:00	30-Jun-21	02-Jul-21	1496849	✓	✓	Dustfall	Metals
Silver (Ag)-Total	L2600818-39	SPP1-DUSTFALL-24	MET-DUST(DM2)-MS-VA	0.00000408	0.00000080	mg/dm2.day		26-May-21	00:00	30-Jun-21	02-Jul-21	1496849	✓	✓	Dustfall	Metals
Sodium (Na)-Total	L2600818-39	SPP1-DUSTFALL-24	MET-DUST(DM2)-MS-VA	0.118	0.0040	mg/dm2.day		26-May-21	00:00	30-Jun-21	02-Jul-21	1496849	✓	✓	Dustfall	Metals
Strontium (Sr)-Total	L2600818-39	SPP1-DUSTFALL-24	MET-DUST(DM2)-MS-VA	0.000386	0.0000080	mg/dm2.day		26-May-21	00:00	30-Jun-21	02-Jul-21	1496849	✓	✓	Dustfall	Metals
Thallium (Tl)-Total	L2600818-39	SPP1-DUSTFALL-24	MET-DUST(DM2)-MS-VA	<0.0000080	0.0000080	mg/dm2.day		26-May-21	00:00	30-Jun-21	02-Jul-21	1496849	✓	✓	Dustfall	Metals
Tin (Sn)-Total	L2600818-39	SPP1-DUSTFALL-24	MET-DUST(DM2)-MS-VA	<0.0000080	0.0000080	mg/dm2.day		26-May-21	00:00	30-Jun-21	02-Jul-21	1496849	✓	✓	Dustfall	Metals
Titanium (Ti)-Total	L2600818-39	SPP1-DUSTFALL-24	MET-DUST(DM2)-MS-VA	<0.00080	0.00080	mg/dm2.day		26-May-21	00:00	30-Jun-21	02-Jul-21	1496849	✓	✓	Dustfall	Metals
Uranium (U)-Total	L2600818-39	SPP1-DUSTFALL-24	MET-DUST(DM2)-MS-VA	0.00000124	0.00000080	mg/dm2.day		26-May-21	00:00	30-Jun-21	02-Jul-21	1496849	✓	✓	Dustfall	Metals
Vanadium (V)-Total	L2600818-39	SPP1-DUSTFALL-24	MET-DUST(DM2)-MS-VA	<0.000080	0.000080	mg/dm2.day		26-May-21	00:00	30-Jun-21	02-Jul-21	1496849	✓	✓	Dustfall	Metals
Zinc (Zn)-Total	L2600818-39	SPP1-DUSTFALL-24	MET-DUST(DM2)-MS-VA	0.00388	0.00024	mg/dm2.day		26-May-21	00:00	30-Jun-21	02-Jul-21	1496849	✓	✓	Dustfall	Metals
Particulates (Dustfall)																
Fixed Dustfall	L2600818-40	DUSTFALL-GALLINGER ROAD	DUSTFALLS-ALL-DM2-VA	0.77	0.11	mg/dm2.day		31-May-21	00:00		29-Jun-21	1497132	✓	✓	Dustfall	Particulates
Volatile Dustfall	L2600818-40	DUSTFALL-GALLINGER ROAD	DUSTFALLS-ALL-DM2-VA	0.56	0.11	mg/dm2.day		31-May-21	00:00		29-Jun-21	1497132	✓	✓	Dustfall	Particulates
Total Dustfall	L2600818-40	DUSTFALL-GALLINGER ROAD	DUSTFALLS-ALL-DM2-VA	1.33	0.11	mg/dm2.day		31-May-21	00:00		29-Jun-21	1497132	✓	✓	Dustfall	Particulates
Fixed Insoluble Dustfall	L2600818-40	DUSTFALL-GALLINGER ROAD	DUSTFALLS-ALL-DM2-VA	0.66	0.11	mg/dm2.day		31-May-21	00:00		29-Jun-21	1497132	✓	✓	Dustfall	Particulates
Volatile Insoluble Dustfall	L2600818-40	DUSTFALL-GALLINGER ROAD	DUSTFALLS-ALL-DM2-VA	0.20	0.11	mg/dm2.day		31-May-21	00:00		29-Jun-21	1497132	✓	✓	Dustfall	Particulates
Total Insoluble Dustfall	L2600818-40	DUSTFALL-GALLINGER ROAD	DUSTFALLS-ALL-DM2-VA	0.85	0.11	mg/dm2.day		31-May-21	00:00		29-Jun-21	1497132	✓	✓	Dustfall	Particulates
Fixed Soluble Dustfall	L2600818-40	DUSTFALL-GALLINGER ROAD	DUSTFALLS-ALL-DM2-VA	0.11	0.11	mg/dm2.day		31-May-21	00:00		29-Jun-21	1497132	✓	✓	Dustfall	Particulates
Volatile Soluble Dustfall	L2600818-40	DUSTFALL-GALLINGER ROAD	DUSTFALLS-ALL-DM2-VA	0.36	0.11	mg/dm2.day		31-May-21	00:00		29-Jun-21	1497132	✓	✓	Dustfall	Particulates
Total Soluble Dustfall	L2600818-40	DUSTFALL-GALLINGER ROAD	DUSTFALLS-ALL-DM2-VA	0.48	0.11	mg/dm2.day		31-May-21	00:00		29-Jun-21	1497132	✓	✓	Dustfall	Particulates
Metals (Dustfall)																
Aluminum (Al)-Total	L2600818-40	DUSTFALL-GALLINGER ROAD	MET-DUST(DM2)-MS-VA	0.00207	0.000058	mg/dm2.day		31-May-21	00:00	30-Jun-21	02-Jul-21	1496849	×	✓	Dustfall	Metals
Antimony (Sb)-Total	L2600818-40	DUSTFALL-GALLINGER ROAD	MET-DUST(DM2)-MS-VA	0.0000035	0.0000019	mg/dm2.day		31-May-21	00:00	30-Jun-21	02-Jul-21	1496849	✓	✓	Dustfall	Metals

Results of Analysis L2600818

Job Reference NEW GOLD RRP
Report To Sarah Flesher, New Gold Inc. Rainy River Project
Date Received 14-Jun-2021 10:00
Report Date 7-Jul-2021 14:12
Report Version 1

Parameter	ALS ID	Client Sample ID	ALS Test Code	Results	Detection Limit	Units	Qual	Date Sampled	Time Sampled	Prep Date	Analysis Date	QC Lot	QC Eval	Hold Time Eval	Matrix	Class
Arsenic (As)-Total	L2600818-40	DUSTFALL-GALLINGER ROAD	MET-DUST(DM2)-MS-VA	0.0000024	0.0000019	mg/dm2.day		31-May-21	00:00	30-Jun-21	02-Jul-21	1496849	✓	✓	Dustfall	Metals
Barium (Ba)-Total	L2600818-40	DUSTFALL-GALLINGER ROAD	MET-DUST(DM2)-MS-VA	0.0000616	0.00000097	mg/dm2.day		31-May-21	00:00	30-Jun-21	02-Jul-21	1496849	×	✓	Dustfall	Metals
Beryllium (Be)-Total	L2600818-40	DUSTFALL-GALLINGER ROAD	MET-DUST(DM2)-MS-VA	<0.0000097	0.0000097	mg/dm2.day		31-May-21	00:00	30-Jun-21	02-Jul-21	1496849	✓	✓	Dustfall	Metals
Bismuth (Bi)-Total	L2600818-40	DUSTFALL-GALLINGER ROAD	MET-DUST(DM2)-MS-VA	<0.0000097	0.0000097	mg/dm2.day		31-May-21	00:00	30-Jun-21	02-Jul-21	1496849	✓	✓	Dustfall	Metals
Boron (B)-Total	L2600818-40	DUSTFALL-GALLINGER ROAD	MET-DUST(DM2)-MS-VA	<0.00019	0.00019	mg/dm2.day		31-May-21	00:00	30-Jun-21	02-Jul-21	1496849	✓	✓	Dustfall	Metals
Cadmium (Cd)-Total	L2600818-40	DUSTFALL-GALLINGER ROAD	MET-DUST(DM2)-MS-VA	<0.00000097	0.00000097	mg/dm2.day		31-May-21	00:00	30-Jun-21	02-Jul-21	1496849	✓	✓	Dustfall	Metals
Calcium (Ca)-Total	L2600818-40	DUSTFALL-GALLINGER ROAD	MET-DUST(DM2)-MS-VA	0.0306	0.00039	mg/dm2.day		31-May-21	00:00	30-Jun-21	02-Jul-21	1496849	×	✓	Dustfall	Metals
Chromium (Cr)-Total	L2600818-40	DUSTFALL-GALLINGER ROAD	MET-DUST(DM2)-MS-VA	<0.0000097	0.0000097	mg/dm2.day		31-May-21	00:00	30-Jun-21	02-Jul-21	1496849	✓	✓	Dustfall	Metals
Cobalt (Co)-Total	L2600818-40	DUSTFALL-GALLINGER ROAD	MET-DUST(DM2)-MS-VA	0.0000026	0.0000019	mg/dm2.day		31-May-21	00:00	30-Jun-21	02-Jul-21	1496849	✓	✓	Dustfall	Metals
Copper (Cu)-Total	L2600818-40	DUSTFALL-GALLINGER ROAD	MET-DUST(DM2)-MS-VA	0.0000342	0.0000097	mg/dm2.day		31-May-21	00:00	30-Jun-21	02-Jul-21	1496849	✓	✓	Dustfall	Metals
Iron (Fe)-Total	L2600818-40	DUSTFALL-GALLINGER ROAD	MET-DUST(DM2)-MS-VA	0.00233	0.00058	mg/dm2.day		31-May-21	00:00	30-Jun-21	02-Jul-21	1496849	✓	✓	Dustfall	Metals
Lead (Pb)-Total	L2600818-40	DUSTFALL-GALLINGER ROAD	MET-DUST(DM2)-MS-VA	0.00000261	0.00000097	mg/dm2.day		31-May-21	00:00	30-Jun-21	02-Jul-21	1496849	✓	✓	Dustfall	Metals
Lithium (Li)-Total	L2600818-40	DUSTFALL-GALLINGER ROAD	MET-DUST(DM2)-MS-VA	<0.000097	0.000097	mg/dm2.day		31-May-21	00:00	30-Jun-21	02-Jul-21	1496849	✓	✓	Dustfall	Metals
Magnesium (Mg)-Total	L2600818-40	DUSTFALL-GALLINGER ROAD	MET-DUST(DM2)-MS-VA	0.00602	0.000097	mg/dm2.day		31-May-21	00:00	30-Jun-21	02-Jul-21	1496849	✓	✓	Dustfall	Metals
Manganese (Mn)-Total	L2600818-40	DUSTFALL-GALLINGER ROAD	MET-DUST(DM2)-MS-VA	0.000469	0.0000019	mg/dm2.day		31-May-21	00:00	30-Jun-21	02-Jul-21	1496849	✓	✓	Dustfall	Metals
Molybdenum (Mo)-Total	L2600818-40	DUSTFALL-GALLINGER ROAD	MET-DUST(DM2)-MS-VA	<0.000013	0.000013	mg/dm2.day	DLB	31-May-21	00:00	30-Jun-21	02-Jul-21	1496849	×	✓	Dustfall	Metals
Nickel (Ni)-Total	L2600818-40	DUSTFALL-GALLINGER ROAD	MET-DUST(DM2)-MS-VA	0.0000119	0.0000097	mg/dm2.day		31-May-21	00:00	30-Jun-21	02-Jul-21	1496849	✓	✓	Dustfall	Metals
Phosphorus (P)-Total	L2600818-40	DUSTFALL-GALLINGER ROAD	MET-DUST(DM2)-MS-VA	0.00287	0.00097	mg/dm2.day		31-May-21	00:00	30-Jun-21	02-Jul-21	1496849	✓	✓	Dustfall	Metals
Potassium (K)-Total	L2600818-40	DUSTFALL-GALLINGER ROAD	MET-DUST(DM2)-MS-VA	0.00744	0.00097	mg/dm2.day		31-May-21	00:00	30-Jun-21	02-Jul-21	1496849	✓	✓	Dustfall	Metals
Selenium (Se)-Total	L2600818-40	DUSTFALL-GALLINGER ROAD	MET-DUST(DM2)-MS-VA	<0.000019	0.000019	mg/dm2.day		31-May-21	00:00	30-Jun-21	02-Jul-21	1496849	✓	✓	Dustfall	Metals
Silicon (Si)-Total	L2600818-40	DUSTFALL-GALLINGER ROAD	MET-DUST(DM2)-MS-VA	0.00379	0.00097	mg/dm2.day		31-May-21	00:00	30-Jun-21	02-Jul-21	1496849	✓	✓	Dustfall	Metals
Silver (Ag)-Total	L2600818-40	DUSTFALL-GALLINGER ROAD	MET-DUST(DM2)-MS-VA	<0.00000019	0.00000019	mg/dm2.day		31-May-21	00:00	30-Jun-21	02-Jul-21	1496849	✓	✓	Dustfall	Metals
Sodium (Na)-Total	L2600818-40	DUSTFALL-GALLINGER ROAD	MET-DUST(DM2)-MS-VA	0.00247	0.00097	mg/dm2.day		31-May-21	00:00	30-Jun-21	02-Jul-21	1496849	✓	✓	Dustfall	Metals
Strontium (Sr)-Total	L2600818-40	DUSTFALL-GALLINGER ROAD	MET-DUST(DM2)-MS-VA	0.0000598	0.0000019	mg/dm2.day		31-May-21	00:00	30-Jun-21	02-Jul-21	1496849	✓	✓	Dustfall	Metals
Thallium (Tl)-Total	L2600818-40	DUSTFALL-GALLINGER ROAD	MET-DUST(DM2)-MS-VA	<0.0000019	0.0000019	mg/dm2.day		31-May-21	00:00	30-Jun-21	02-Jul-21	1496849	✓	✓	Dustfall	Metals
Tin (Sn)-Total	L2600818-40	DUSTFALL-GALLINGER ROAD	MET-DUST(DM2)-MS-VA	<0.0000019	0.0000019	mg/dm2.day		31-May-21	00:00	30-Jun-21	02-Jul-21	1496849	✓	✓	Dustfall	Metals
Titanium (Ti)-Total	L2600818-40	DUSTFALL-GALLINGER ROAD	MET-DUST(DM2)-MS-VA	<0.00019	0.00019	mg/dm2.day		31-May-21	00:00	30-Jun-21	02-Jul-21	1496849	✓	✓	Dustfall	Metals
Uranium (U)-Total	L2600818-40	DUSTFALL-GALLINGER ROAD	MET-DUST(DM2)-MS-VA	<0.00000019	0.00000019	mg/dm2.day		31-May-21	00:00	30-Jun-21	02-Jul-21	1496849	✓	✓	Dustfall	Metals
Vanadium (V)-Total	L2600818-40	DUSTFALL-GALLINGER ROAD	MET-DUST(DM2)-MS-VA	<0.000019	0.000019	mg/dm2.day		31-May-21	00:00	30-Jun-21	02-Jul-21	1496849	✓	✓	Dustfall	Metals
Zinc (Zn)-Total	L2600818-40	DUSTFALL-GALLINGER ROAD	MET-DUST(DM2)-MS-VA	0.000093	0.000058	mg/dm2.day		31-May-21	00:00	30-Jun-21	02-Jul-21	1496849	✓	✓	Dustfall	Metals
Particulates (Dustfall)																
Fixed Dustfall	L2600818-41	DUSTFALL-TAIT ROAD (SOUTH)	DUSTFALLS-ALL-DM2-VA	1.31	0.11	mg/dm2.day		31-May-21	00:00		29-Jun-21	1497132	✓	✓	Dustfall	Particulates
Volatile Dustfall	L2600818-41	DUSTFALL-TAIT ROAD (SOUTH)	DUSTFALLS-ALL-DM2-VA	2.14	0.11	mg/dm2.day		31-May-21	00:00		29-Jun-21	1497132	✓	✓	Dustfall	Particulates
Total Dustfall	L2600818-41	DUSTFALL-TAIT ROAD (SOUTH)	DUSTFALLS-ALL-DM2-VA	3.45	0.11	mg/dm2.day		31-May-21	00:00		29-Jun-21	1497132	✓	✓	Dustfall	Particulates
Fixed Insoluble Dustfall	L2600818-41	DUSTFALL-TAIT ROAD (SOUTH)	DUSTFALLS-ALL-DM2-VA	0.88	0.11	mg/dm2.day		31-May-21	00:00		29-Jun-21	1497132	✓	✓	Dustfall	Particulates
Volatile Insoluble Dustfall	L2600818-41	DUSTFALL-TAIT ROAD (SOUTH)	DUSTFALLS-ALL-DM2-VA	0.94	0.11	mg/dm2.day		31-May-21	00:00		29-Jun-21	1497132	✓	✓	Dustfall	Particulates
Total Insoluble Dustfall	L2600818-41	DUSTFALL-TAIT ROAD (SOUTH)	DUSTFALLS-ALL-DM2-VA	1.82	0.11	mg/dm2.day		31-May-21	00:00		29-Jun-21	1497132	✓	✓	Dustfall	Particulates
Fixed Soluble Dustfall	L2600818-41	DUSTFALL-TAIT ROAD (SOUTH)	DUSTFALLS-ALL-DM2-VA	0.43	0.11	mg/dm2.day		31-May-21	00:00		29-Jun-21	1497132	✓	✓	Dustfall	Particulates
Volatile Soluble Dustfall	L2600818-41	DUSTFALL-TAIT ROAD (SOUTH)	DUSTFALLS-ALL-DM2-VA	1.20	0.11	mg/dm2.day		31-May-21	00:00		29-Jun-21	1497132	✓	✓	Dustfall	Particulates
Total Soluble Dustfall	L2600818-41	DUSTFALL-TAIT ROAD (SOUTH)	DUSTFALLS-ALL-DM2-VA	1.63	0.11	mg/dm2.day		31-May-21	00:00		29-Jun-21	1497132	✓	✓	Dustfall	Particulates
Metals (Dustfall)																
Aluminum (Al)-Total	L2600818-41	DUSTFALL-TAIT ROAD (SOUTH)	MET-DUST(DM2)-MS-VA	0.0141	0.000064	mg/dm2.day		31-May-21	00:00	30-Jun-21	02-Jul-21	1496849	×	✓	Dustfall	Metals
Antimony (Sb)-Total	L2600818-41	DUSTFALL-TAIT ROAD (SOUTH)	MET-DUST(DM2)-MS-VA	0.0000021	0.0000021	mg/dm2.day		31-May-21	00:00	30-Jun-21	02-Jul-21	1496849	✓	✓	Dustfall	Metals
Arsenic (As)-Total	L2600818-41	DUSTFALL-TAIT ROAD (SOUTH)	MET-DUST(DM2)-MS-VA	0.0000059	0.0000021	mg/dm2.day		31-May-21	00:00	30-Jun-21	02-Jul-21	1496849	✓	✓	Dustfall	Metals
Barium (Ba)-Total	L2600818-41	DUSTFALL-TAIT ROAD (SOUTH)	MET-DUST(DM2)-MS-VA	0.000128	0.0000011	mg/dm2.day		31-May-21	00:00	30-Jun-21	02-Jul-21	1496849	×	✓	Dustfall	Metals
Beryllium (Be)-Total	L2600818-41	DUSTFALL-TAIT ROAD (SOUTH)	MET-DUST(DM2)-MS-VA	<0.000011	0.000011	mg/dm2.day		31-May-21	00:00	30-Jun-21	02-Jul-21	1496849	✓	✓	Dustfall	Metals
Bismuth (Bi)-Total	L2600818-41	DUSTFALL-TAIT ROAD (SOUTH)	MET-DUST(DM2)-MS-VA	<0.000011	0.000011	mg/dm2.day		31-May-21	00:00	30-Jun-21	02-Jul-21	1496849	✓	✓	Dustfall	Metals
Boron (B)-Total	L2600818-41	DUSTFALL-TAIT ROAD (SOUTH)	MET-DUST(DM2)-MS-VA	<0.00021	0.00021	mg/dm2.day		31-May-21	00:00	30-Jun-21	02-Jul-21	1496849	✓	✓	Dustfall	Metals
Cadmium (Cd)-Total	L2600818-41	DUSTFALL-TAIT ROAD (SOUTH)	MET-DUST(DM2)-MS-VA	0.0000052	0.0000011	mg/dm2.day		31-May-21	00:00	30-Jun-21	02-Jul-21	1496849	✓	✓	Dustfall	Metals
Calcium (Ca)-Total	L2600818-41	DUSTFALL-TAIT ROAD (SOUTH)	MET-DUST(DM2)-MS-VA	0.0451	0.00043	mg/dm2.day		31-May-21	00:00	30-Jun-21	02-Jul-21	1496849	×	✓	Dustfall	Metals
Chromium (Cr)-Total	L2600818-41	DUSTFALL-TAIT ROAD (SOUTH)	MET-DUST(DM2)-MS-VA	0.000028	0.000011	mg/dm2.day		31-May-21	00:00	30-Jun-21	02-Jul-21	1496849	✓	✓	Dustfall	Metals
Cobalt (Co)-Total	L2600818-41	DUSTFALL-TAIT ROAD (SOUTH)	MET-DUST(DM2)-MS-VA	0.0000125	0.0000021	mg/dm2.day		31-May-21	00:00	30-Jun-21	02-Jul-21	1496849	✓	✓	Dustfall	Metals
Copper (Cu)-Total	L2600818-41	DUSTFALL-TAIT ROAD (SOUTH)	MET-DUST(DM2)-MS-VA	0.000124	0.000011	mg/dm2.day		31-May-21	00:00	30-Jun-21	02-Jul-21	1496849	✓	✓	Dustfall	Metals
Iron (Fe)-Total	L2600818-41	DUSTFALL-TAIT ROAD (SOUTH)	MET-DUST(DM2)-MS-VA	0.0175	0.00064	mg/dm2.day		31-May-21	00:00	30-Jun-21	02-Jul-21	1496849	✓	✓	Dustfall	Metals
Lead (Pb)-Total	L2600818-41	DUSTFALL-TAIT ROAD (SOUTH)	MET-DUST(DM2)-MS-VA	0.0000222	0.0000011	mg/dm2.day		31-May-21	00:00	30-Jun-21	02-Jul-21	1496849	✓	✓	Dustfall	Metals
Lithium (Li)-Total	L2600818-41	DUSTFALL-TAIT ROAD (SOUTH)	MET-DUST(DM2)-MS-VA	<0.00011	0.00011	mg/dm2.day		31-May-21	00:00	30-Jun-21	02-Jul-21	1496849	✓	✓	Dustfall	Metals
Magnesium (Mg)-Total	L2600818-41	DUSTFALL-TAIT ROAD (SOUTH)	MET-DUST(DM2)-MS-VA	0.0269	0.00011	mg/dm2.day		31-May-21	00:00	30-Jun-21	02-Jul-21	1496849	✓	✓	Dustfall	Metals
Manganese (Mn)-Total	L2600818-41	DUSTFALL-TAIT ROAD (SOUTH)	MET-DUST(DM2)-MS-VA	0.000975	0.0000021	mg/dm2.day		31-May-21	00:00	30-Jun-21	02-Jul-21	1496849	✓	✓	Dustfall	Metals
Molybdenum (Mo)-Total	L2600818-41	DUSTFALL-TAIT ROAD (SOUTH)	MET-DUST(DM2)-MS-VA	0.0000340	0.0000011	mg/dm2.day		31-May-21	00:00	30-Jun-21	02-Jul-21	1496849	×	✓	Dustfall	Metals
Nickel (Ni)-Total	L2600818-41	DUSTFALL-TAIT ROAD (SOUTH)	MET-DUST(DM2)-MS-VA	0.000048	0.000011	mg/dm2.day		31-May-21	00:00	30-Jun-21	02-Jul-21	1496849	✓	✓	Dustfall	Metals
Phosphorus (P)-Total	L2600818-41	DUSTFALL-TAIT ROAD (SOUTH)	MET-DUST(DM2)-MS-VA	0.0692	0.0011	mg/dm2.day		31-May-21	00:00	30-Jun-21	02-Jul-21	1496849	✓	✓	Dustfall	Metals
Potassium (K)-Total	L2600818-41	DUSTFALL-TAIT ROAD (SOUTH)	MET-DUST(DM2)-MS-VA	0.0963	0.0011	mg/dm2.day		31-May-21	00:00	30-Jun-21	02-Jul-21	1496849	✓	✓	Dustfall	Metals
Selenium (Se)-Total	L2600818-41	DUSTFALL-TAIT ROAD (SOUTH)	MET-DUST(DM2)-MS-VA	<0.000021	0.000021	mg/dm2.day		31-May-21	00:00	30-Jun-21	02-Jul-21	1496849	✓	✓	Dustfall	Metals
Silicon (Si)-Total	L2600818-41	DUSTFALL-TAIT ROAD (SOUTH)	MET-DUST(DM2)-MS-VA	0.0232	0.0011	mg/dm2.day		31-May-21	00:00	30-Jun-21	02-Jul-21	1496849	✓	✓	Dustfall	Metals
Silver (Ag)-Total	L2600818-41	DUSTFALL-TAIT ROAD (SOUTH)	MET-DUST(DM2)-MS-VA	0.00000048	0.00000021	mg/dm2.day		31-May-21	00:00	30-Jun-21	02-Jul-21	1496849	✓	✓	Dustfall	Metals
Sodium (Na)-Total	L2600818-41	DUSTFALL-TAIT ROAD (SOUTH)	MET-DUST(DM2)-MS-VA	0.0141	0.0011	mg/dm2.day		31-May-21	00:00	30-Jun-21	02-Jul-21	1496849	✓	✓	Dustfall	Metals
Strontium (Sr)-Total	L2600818-41	DUSTFALL-TAIT ROAD (SOUTH)	MET-DUST(DM2)-MS-VA	0.000123	0.0000021	mg/dm2.day		31-May-21	00:00	30-Jun-21	02-Jul-21	1496849	✓	✓	Dustfall	Metals
Thallium (Tl)-Total	L2600818-41	DUSTFALL-TAIT ROAD (SOUTH)	MET-DUST(DM2)-MS-VA	<0.0000021	0.0000021	mg/dm2.day		31-May-21	00:00	30-Jun-21	02-Jul-21	1496849	✓	✓	Dustfall	Metals
Tin (Sn)-Total	L2600818-41	DUSTFALL-TAIT ROAD (SOUTH)	MET-DUST(DM2)-MS-VA	<0.0000021	0.0000021	mg/dm2.day		31-May-21	00:00	30-Jun-21	02-Jul-21	1496849	✓	✓	Dustfall	Metals
Titanium (Ti)-Total	L2600818-41	DUSTFALL-TAIT ROAD (SOUTH)	MET-DUST(DM2)-MS-VA	0.00030	0.00021	mg/dm2.day		31-May-21	00:00	30-Jun-21	02-Jul-21	1496849	✓	✓	Dustfall	Metals
Uranium (U)-Total	L2600818-41	DUSTFALL-TAIT ROAD (SOUTH)	MET-DUST(DM2)-MS-VA	0.00000104	0.00000021	mg/dm2.day		31-May-21	00:00	30-Jun-21	02-Jul-21	1496849	✓	✓	Dustfall	Metals
Vanadium (V)-Total	L2600818-41	DUSTFALL-TAIT ROAD (SOUTH)	MET-DUST(DM2)-MS-VA	0.000032	0.000021	mg/dm2.day		31-May-21	00:00	30-Jun-21	02-Jul-21	1496849	✓	✓	Dustfall	Metals
Zinc (Zn)-Total	L2600818-41	DUSTFALL-TAIT ROAD (SOUTH)	MET-DUST(DM2)-MS-VA	0.000723	0.000064	mg/dm2.day		31-May-21	00:00	30-Jun-21	02-Jul-21	1496849	✓	✓	Dustfall	Metals
Particulates (Dustfall)																
Fixed Dustfall	L2600818-42	DUSTFALL-NORTHWEST	DUSTFALLS-ALL-DM2-VA	0.58	0.11	mg/dm2.day		31-May-21	00:00		29-Jun-21	1497132	✓	✓	Dustfall	Particulates

Results of Analysis L2600818

Job Reference NEW GOLD RRP
Report To Sarah Flesher, New Gold Inc. Rainy River Project
Date Received 14-Jun-2021 10:00
Report Date 7-Jul-2021 14:12
Report Version 1

Parameter	ALS ID	Client Sample ID	ALS Test Code	Results	Detection Limit	Units	Qual	Date Sampled	Time Sampled	Prep Date	Analysis Date	QC Lot	QC Eval	Hold Time Eval	Matrix	Class
Volatile Dustfall	L2600818-42	DUSTFALL-NORTHWEST	DUSTFALLS-ALL-DM2-VA	2.48	0.11	mg/dm2.day		31-May-21	00:00		29-Jun-21	1497132	✓	✓	Dustfall	Particulates
Total Dustfall	L2600818-42	DUSTFALL-NORTHWEST	DUSTFALLS-ALL-DM2-VA	3.06	0.11	mg/dm2.day		31-May-21	00:00		29-Jun-21	1497132	✓	✓	Dustfall	Particulates
Fixed Insoluble Dustfall	L2600818-42	DUSTFALL-NORTHWEST	DUSTFALLS-ALL-DM2-VA	0.15	0.11	mg/dm2.day		31-May-21	00:00		29-Jun-21	1497132	✓	✓	Dustfall	Particulates
Volatile Insoluble Dustfall	L2600818-42	DUSTFALL-NORTHWEST	DUSTFALLS-ALL-DM2-VA	1.41	0.11	mg/dm2.day		31-May-21	00:00		29-Jun-21	1497132	✓	✓	Dustfall	Particulates
Total Insoluble Dustfall	L2600818-42	DUSTFALL-NORTHWEST	DUSTFALLS-ALL-DM2-VA	1.56	0.11	mg/dm2.day		31-May-21	00:00		29-Jun-21	1497132	✓	✓	Dustfall	Particulates
Fixed Soluble Dustfall	L2600818-42	DUSTFALL-NORTHWEST	DUSTFALLS-ALL-DM2-VA	0.43	0.11	mg/dm2.day		31-May-21	00:00		29-Jun-21	1497132	✓	✓	Dustfall	Particulates
Volatile Soluble Dustfall	L2600818-42	DUSTFALL-NORTHWEST	DUSTFALLS-ALL-DM2-VA	1.07	0.11	mg/dm2.day		31-May-21	00:00		29-Jun-21	1497132	✓	✓	Dustfall	Particulates
Total Soluble Dustfall	L2600818-42	DUSTFALL-NORTHWEST	DUSTFALLS-ALL-DM2-VA	1.50	0.11	mg/dm2.day		31-May-21	00:00		29-Jun-21	1497132	✓	✓	Dustfall	Particulates
Metals (Dustfall)																
Aluminum (Al)-Total	L2600818-42	DUSTFALL-NORTHWEST	MET-DUST(DM2)-MS-VA	0.00142	0.000053	mg/dm2.day		31-May-21	00:00	30-Jun-21	02-Jul-21	1496849	✗	✓	Dustfall	Metals
Antimony (Sb)-Total	L2600818-42	DUSTFALL-NORTHWEST	MET-DUST(DM2)-MS-VA	0.0000021	0.0000018	mg/dm2.day		31-May-21	00:00	30-Jun-21	02-Jul-21	1496849	✓	✓	Dustfall	Metals
Arsenic (As)-Total	L2600818-42	DUSTFALL-NORTHWEST	MET-DUST(DM2)-MS-VA	0.0000026	0.0000018	mg/dm2.day		31-May-21	00:00	30-Jun-21	02-Jul-21	1496849	✓	✓	Dustfall	Metals
Barium (Ba)-Total	L2600818-42	DUSTFALL-NORTHWEST	MET-DUST(DM2)-MS-VA	0.0000326	0.00000089	mg/dm2.day		31-May-21	00:00	30-Jun-21	02-Jul-21	1496849	✗	✓	Dustfall	Metals
Beryllium (Be)-Total	L2600818-42	DUSTFALL-NORTHWEST	MET-DUST(DM2)-MS-VA	<0.0000089	0.0000089	mg/dm2.day		31-May-21	00:00	30-Jun-21	02-Jul-21	1496849	✓	✓	Dustfall	Metals
Bismuth (Bi)-Total	L2600818-42	DUSTFALL-NORTHWEST	MET-DUST(DM2)-MS-VA	<0.0000089	0.0000089	mg/dm2.day		31-May-21	00:00	30-Jun-21	02-Jul-21	1496849	✓	✓	Dustfall	Metals
Boron (B)-Total	L2600818-42	DUSTFALL-NORTHWEST	MET-DUST(DM2)-MS-VA	<0.00018	0.00018	mg/dm2.day		31-May-21	00:00	30-Jun-21	02-Jul-21	1496849	✓	✓	Dustfall	Metals
Cadmium (Cd)-Total	L2600818-42	DUSTFALL-NORTHWEST	MET-DUST(DM2)-MS-VA	<0.00000089	0.00000089	mg/dm2.day		31-May-21	00:00	30-Jun-21	02-Jul-21	1496849	✓	✓	Dustfall	Metals
Calcium (Ca)-Total	L2600818-42	DUSTFALL-NORTHWEST	MET-DUST(DM2)-MS-VA	0.0149	0.00035	mg/dm2.day		31-May-21	00:00	30-Jun-21	02-Jul-21	1496849	✗	✓	Dustfall	Metals
Chromium (Cr)-Total	L2600818-42	DUSTFALL-NORTHWEST	MET-DUST(DM2)-MS-VA	<0.0000089	0.0000089	mg/dm2.day		31-May-21	00:00	30-Jun-21	02-Jul-21	1496849	✓	✓	Dustfall	Metals
Cobalt (Co)-Total	L2600818-42	DUSTFALL-NORTHWEST	MET-DUST(DM2)-MS-VA	<0.0000018	0.0000018	mg/dm2.day		31-May-21	00:00	30-Jun-21	02-Jul-21	1496849	✓	✓	Dustfall	Metals
Copper (Cu)-Total	L2600818-42	DUSTFALL-NORTHWEST	MET-DUST(DM2)-MS-VA	0.0000543	0.0000089	mg/dm2.day		31-May-21	00:00	30-Jun-21	02-Jul-21	1496849	✓	✓	Dustfall	Metals
Iron (Fe)-Total	L2600818-42	DUSTFALL-NORTHWEST	MET-DUST(DM2)-MS-VA	0.00188	0.00053	mg/dm2.day		31-May-21	00:00	30-Jun-21	02-Jul-21	1496849	✓	✓	Dustfall	Metals
Lead (Pb)-Total	L2600818-42	DUSTFALL-NORTHWEST	MET-DUST(DM2)-MS-VA	0.00000362	0.00000089	mg/dm2.day		31-May-21	00:00	30-Jun-21	02-Jul-21	1496849	✓	✓	Dustfall	Metals
Lithium (Li)-Total	L2600818-42	DUSTFALL-NORTHWEST	MET-DUST(DM2)-MS-VA	<0.000089	0.000089	mg/dm2.day		31-May-21	00:00	30-Jun-21	02-Jul-21	1496849	✓	✓	Dustfall	Metals
Magnesium (Mg)-Total	L2600818-42	DUSTFALL-NORTHWEST	MET-DUST(DM2)-MS-VA	0.00915	0.000089	mg/dm2.day		31-May-21	00:00	30-Jun-21	02-Jul-21	1496849	✓	✓	Dustfall	Metals
Manganese (Mn)-Total	L2600818-42	DUSTFALL-NORTHWEST	MET-DUST(DM2)-MS-VA	0.000182	0.0000018	mg/dm2.day		31-May-21	00:00	30-Jun-21	02-Jul-21	1496849	✓	✓	Dustfall	Metals
Molybdenum (Mo)-Total	L2600818-42	DUSTFALL-NORTHWEST	MET-DUST(DM2)-MS-VA	<0.0000035	0.0000035	mg/dm2.day	DLB	31-May-21	00:00	30-Jun-21	02-Jul-21	1496849	✗	✓	Dustfall	Metals
Nickel (Ni)-Total	L2600818-42	DUSTFALL-NORTHWEST	MET-DUST(DM2)-MS-VA	<0.0000089	0.0000089	mg/dm2.day		31-May-21	00:00	30-Jun-21	02-Jul-21	1496849	✓	✓	Dustfall	Metals
Phosphorus (P)-Total	L2600818-42	DUSTFALL-NORTHWEST	MET-DUST(DM2)-MS-VA	0.0127	0.00089	mg/dm2.day		31-May-21	00:00	30-Jun-21	02-Jul-21	1496849	✓	✓	Dustfall	Metals
Potassium (K)-Total	L2600818-42	DUSTFALL-NORTHWEST	MET-DUST(DM2)-MS-VA	0.0337	0.00089	mg/dm2.day		31-May-21	00:00	30-Jun-21	02-Jul-21	1496849	✓	✓	Dustfall	Metals
Selenium (Se)-Total	L2600818-42	DUSTFALL-NORTHWEST	MET-DUST(DM2)-MS-VA	<0.000018	0.000018	mg/dm2.day		31-May-21	00:00	30-Jun-21	02-Jul-21	1496849	✓	✓	Dustfall	Metals
Silicon (Si)-Total	L2600818-42	DUSTFALL-NORTHWEST	MET-DUST(DM2)-MS-VA	0.00342	0.00089	mg/dm2.day		31-May-21	00:00	30-Jun-21	02-Jul-21	1496849	✓	✓	Dustfall	Metals
Silver (Ag)-Total	L2600818-42	DUSTFALL-NORTHWEST	MET-DUST(DM2)-MS-VA	<0.00000018	0.00000018	mg/dm2.day		31-May-21	00:00	30-Jun-21	02-Jul-21	1496849	✓	✓	Dustfall	Metals
Sodium (Na)-Total	L2600818-42	DUSTFALL-NORTHWEST	MET-DUST(DM2)-MS-VA	0.106	0.00089	mg/dm2.day		31-May-21	00:00	30-Jun-21	02-Jul-21	1496849	✓	✓	Dustfall	Metals
Strontium (Sr)-Total	L2600818-42	DUSTFALL-NORTHWEST	MET-DUST(DM2)-MS-VA	0.0000322	0.0000018	mg/dm2.day		31-May-21	00:00	30-Jun-21	02-Jul-21	1496849	✓	✓	Dustfall	Metals
Thallium (Tl)-Total	L2600818-42	DUSTFALL-NORTHWEST	MET-DUST(DM2)-MS-VA	<0.0000018	0.0000018	mg/dm2.day		31-May-21	00:00	30-Jun-21	02-Jul-21	1496849	✓	✓	Dustfall	Metals
Tin (Sn)-Total	L2600818-42	DUSTFALL-NORTHWEST	MET-DUST(DM2)-MS-VA	<0.0000018	0.0000018	mg/dm2.day		31-May-21	00:00	30-Jun-21	02-Jul-21	1496849	✓	✓	Dustfall	Metals
Titanium (Ti)-Total	L2600818-42	DUSTFALL-NORTHWEST	MET-DUST(DM2)-MS-VA	<0.00018	0.00018	mg/dm2.day		31-May-21	00:00	30-Jun-21	02-Jul-21	1496849	✓	✓	Dustfall	Metals
Uranium (U)-Total	L2600818-42	DUSTFALL-NORTHWEST	MET-DUST(DM2)-MS-VA	0.00000022	0.00000018	mg/dm2.day		31-May-21	00:00	30-Jun-21	02-Jul-21	1496849	✓	✓	Dustfall	Metals
Vanadium (V)-Total	L2600818-42	DUSTFALL-NORTHWEST	MET-DUST(DM2)-MS-VA	<0.000018	0.000018	mg/dm2.day		31-May-21	00:00	30-Jun-21	02-Jul-21	1496849	✓	✓	Dustfall	Metals
Zinc (Zn)-Total	L2600818-42	DUSTFALL-NORTHWEST	MET-DUST(DM2)-MS-VA	0.000251	0.000053	mg/dm2.day		31-May-21	00:00	30-Jun-21	02-Jul-21	1496849	✓	✓	Dustfall	Metals

Qualifier Legend

DLB Detection Limit Raised. Analyte detected at comparable level in Method Blank.

Evaluation Legend

✓ QC Lot met ALS Data Quality Objectives or Test result met ALS Hold Time Recommendations
✗ QC Lot did not meet ALS Data Quality Objectives or Test result did not meet ALS Hold Time Recommendations

Duplicates L2600818

Job Reference NEW GOLD RRP
Report To Sarah Flesher, New Gold Inc. Rainy River Project
Date Received 14-Jun-2021 10:00
Report Date 7-Jul-2021 14:12
Report Version 1

ALS ID	Reference	Client Sample ID	QC Type	QC Lot #	Analyte	Sample Result	Duplicate Result	Detection Limit	Units	RPD	RPD Limit	Diff	Diff Limit	Qual	Eval	Matrix	Class
Particulates (Filter)																	
WG3558134-9	L2600818-1	SOUTH-TSP-361	DUP	1490801	Total particulate	47200	47500	2300	ug	0.6	5	-			✔	Filter	Particulates
WG3558134-12	L2600818-17	SOUTH-PM2.5-361	DUP	1490802	Total particulate	<15	<15	15	ug	N/A	10	-			✔	Filter	Particulates
Total Metals (Filter)																	
WG3562783-3	L2600818-1	SOUTH-TSP-361	DUP	1494383	Arsenic (As)	<3.0	<3.0	3.0	ug	N/A	20	-			✔	Filter	Total Metals
WG3562783-3	L2600818-1	SOUTH-TSP-361	DUP	1494383	Cadmium (Cd)	<2.0	<2.0	2.0	ug	N/A	20	-			✔	Filter	Total Metals
WG3562783-3	L2600818-1	SOUTH-TSP-361	DUP	1494383	Chromium (Cr)	<5.0	<5.0	5.0	ug	N/A	20	-			✔	Filter	Total Metals
WG3562783-3	L2600818-1	SOUTH-TSP-361	DUP	1494383	Cobalt (Co)	<2.0	<2.0	2.0	ug	N/A	20	-			✔	Filter	Total Metals
WG3562783-3	L2600818-1	SOUTH-TSP-361	DUP	1494383	Copper (Cu)	132	121	4.0	ug	9.3	20	-			✔	Filter	Total Metals
WG3562783-3	L2600818-1	SOUTH-TSP-361	DUP	1494383	Iron (Fe)	972	909	20	ug	6.7	25	-			✔	Filter	Total Metals
WG3562783-3	L2600818-1	SOUTH-TSP-361	DUP	1494383	Lead (Pb)	<3.0	<3.0	3.0	ug	N/A	20	-			✔	Filter	Total Metals
WG3562783-3	L2600818-1	SOUTH-TSP-361	DUP	1494383	Manganese (Mn)	34.7	33.7	1.0	ug	2.8	20	-			✔	Filter	Total Metals
WG3562783-3	L2600818-1	SOUTH-TSP-361	DUP	1494383	Nickel (Ni)	<3.0	<3.0	3.0	ug	N/A	20	-			✔	Filter	Total Metals
WG3562783-3	L2600818-1	SOUTH-TSP-361	DUP	1494383	Selenium (Se)	<10	<10	10	ug	N/A	20	-			✔	Filter	Total Metals
WG3562783-3	L2600818-1	SOUTH-TSP-361	DUP	1494383	Vanadium (V)	<5.0	<5.0	5.0	ug	N/A	20	-			✔	Filter	Total Metals
WG3562783-3	L2600818-1	SOUTH-TSP-361	DUP	1494383	Zinc (Zn)	20.8	15.6	5.0	ug	-		5.2	10		✔	Filter	Total Metals
Metals (Dustfall)																	
WG3565968-3	L2600818-33	NOP1-DUSTFALL-5	DUP	1496849	Aluminum (Al)-Total	0.0270	0.0291	0.000043	mg/dm2.day	7.3	20	-			✔	Dustfall	Metals
WG3565968-3	L2600818-33	NOP1-DUSTFALL-5	DUP	1496849	Antimony (Sb)-Total	0.0000032	0.0000040	0.0000014	mg/dm2.day	-		0.0000008	0.0000028		✔	Dustfall	Metals
WG3565968-3	L2600818-33	NOP1-DUSTFALL-5	DUP	1496849	Arsenic (As)-Total	0.0000146	0.0000153	0.0000014	mg/dm2.day	4.7	20	-			✔	Dustfall	Metals
WG3565968-3	L2600818-33	NOP1-DUSTFALL-5	DUP	1496849	Barium (Ba)-Total	0.000146	0.000161	0.00000071	mg/dm2.day	9.8	20	-			✔	Dustfall	Metals
WG3565968-3	L2600818-33	NOP1-DUSTFALL-5	DUP	1496849	Beryllium (Be)-Total	<0.0000071	<0.0000071	0.0000071	mg/dm2.day	N/A	20	-			✔	Dustfall	Metals
WG3565968-3	L2600818-33	NOP1-DUSTFALL-5	DUP	1496849	Bismuth (Bi)-Total	<0.0000071	<0.0000071	0.0000071	mg/dm2.day	N/A	20	-			✔	Dustfall	Metals
WG3565968-3	L2600818-33	NOP1-DUSTFALL-5	DUP	1496849	Boron (B)-Total	<0.00014	<0.00014	0.00014	mg/dm2.day	N/A	20	-			✔	Dustfall	Metals
WG3565968-3	L2600818-33	NOP1-DUSTFALL-5	DUP	1496849	Cadmium (Cd)-Total	0.00000306	0.00000342	0.00000071	mg/dm2.day	11	20	-			✔	Dustfall	Metals
WG3565968-3	L2600818-33	NOP1-DUSTFALL-5	DUP	1496849	Calcium (Ca)-Total	0.0646	0.0669	0.00028	mg/dm2.day	3.5	20	-			✔	Dustfall	Metals
WG3565968-3	L2600818-33	NOP1-DUSTFALL-5	DUP	1496849	Chromium (Cr)-Total	0.0000340	0.0000378	0.0000071	mg/dm2.day	11	20	-			✔	Dustfall	Metals
WG3565968-3	L2600818-33	NOP1-DUSTFALL-5	DUP	1496849	Cobalt (Co)-Total	0.0000065	0.0000071	0.0000014	mg/dm2.day	9.2	20	-			✔	Dustfall	Metals
WG3565968-3	L2600818-33	NOP1-DUSTFALL-5	DUP	1496849	Copper (Cu)-Total	0.0000869	0.0000965	0.0000071	mg/dm2.day	10	20	-			✔	Dustfall	Metals
WG3565968-3	L2600818-33	NOP1-DUSTFALL-5	DUP	1496849	Iron (Fe)-Total	0.0225	0.0246	0.00043	mg/dm2.day	8.7	20	-			✔	Dustfall	Metals
WG3565968-3	L2600818-33	NOP1-DUSTFALL-5	DUP	1496849	Lead (Pb)-Total	0.000186	0.000191	0.00000071	mg/dm2.day	2.7	20	-			✔	Dustfall	Metals
WG3565968-3	L2600818-33	NOP1-DUSTFALL-5	DUP	1496849	Lithium (Li)-Total	<0.000071	<0.000071	0.000071	mg/dm2.day	N/A	20	-			✔	Dustfall	Metals
WG3565968-3	L2600818-33	NOP1-DUSTFALL-5	DUP	1496849	Magnesium (Mg)-Total	0.0153	0.0164	0.000071	mg/dm2.day	6.9	20	-			✔	Dustfall	Metals
WG3565968-3	L2600818-33	NOP1-DUSTFALL-5	DUP	1496849	Manganese (Mn)-Total	0.00147	0.00153	0.0000014	mg/dm2.day	4.1	20	-			✔	Dustfall	Metals
WG3565968-3	L2600818-33	NOP1-DUSTFALL-5	DUP	1496849	Molybdenum (Mo)-Total	<0.0000043	0.0000224	0.0000043	mg/dm2.day	-		0.0000187	0.0000086	DUP-H,J	✖	Dustfall	Metals
WG3565968-3	L2600818-33	NOP1-DUSTFALL-5	DUP	1496849	Nickel (Ni)-Total	0.0000272	0.0000269	0.0000071	mg/dm2.day	0.9	20	-			✔	Dustfall	Metals
WG3565968-3	L2600818-33	NOP1-DUSTFALL-5	DUP	1496849	Phosphorus (P)-Total	0.00227	0.00215	0.00071	mg/dm2.day	5.3	20	-			✔	Dustfall	Metals
WG3565968-3	L2600818-33	NOP1-DUSTFALL-5	DUP	1496849	Potassium (K)-Total	0.0100	0.0113	0.00071	mg/dm2.day	12	20	-			✔	Dustfall	Metals
WG3565968-3	L2600818-33	NOP1-DUSTFALL-5	DUP	1496849	Selenium (Se)-Total	<0.000014	<0.000014	0.000014	mg/dm2.day	N/A	20	-			✔	Dustfall	Metals
WG3565968-3	L2600818-33	NOP1-DUSTFALL-5	DUP	1496849	Silicon (Si)-Total	0.0328	0.0385	0.00071	mg/dm2.day	16	20	-			✔	Dustfall	Metals
WG3565968-3	L2600818-33	NOP1-DUSTFALL-5	DUP	1496849	Silver (Ag)-Total	0.00000895	0.00000395	0.00000014	mg/dm2.day	77	20	-		DUP-H	✖	Dustfall	Metals
WG3565968-3	L2600818-33	NOP1-DUSTFALL-5	DUP	1496849	Sodium (Na)-Total	0.00383	0.00472	0.00071	mg/dm2.day	-		0.00090	0.00142		✔	Dustfall	Metals
WG3565968-3	L2600818-33	NOP1-DUSTFALL-5	DUP	1496849	Strontium (Sr)-Total	0.000149	0.000166	0.0000014	mg/dm2.day	10	20	-			✔	Dustfall	Metals
WG3565968-3	L2600818-33	NOP1-DUSTFALL-5	DUP	1496849	Thallium (Tl)-Total	<0.0000014	<0.0000014	0.0000014	mg/dm2.day	N/A	20	-			✔	Dustfall	Metals
WG3565968-3	L2600818-33	NOP1-DUSTFALL-5	DUP	1496849	Tin (Sn)-Total	<0.0000014	0.0000015	0.0000014	mg/dm2.day	N/A	20	-			✔	Dustfall	Metals
WG3565968-3	L2600818-33	NOP1-DUSTFALL-5	DUP	1496849	Titanium (Ti)-Total	0.00044	0.00048	0.00014	mg/dm2.day	10	20	-			✔	Dustfall	Metals
WG3565968-3	L2600818-33	NOP1-DUSTFALL-5	DUP	1496849	Uranium (U)-Total	0.00000061	0.00000059	0.00000014	mg/dm2.day	2.5	20	-			✔	Dustfall	Metals
WG3565968-3	L2600818-33	NOP1-DUSTFALL-5	DUP	1496849	Vanadium (V)-Total	0.000038	0.000042	0.000014	mg/dm2.day	9.3	20	-			✔	Dustfall	Metals
WG3565968-3	L2600818-33	NOP1-DUSTFALL-5	DUP	1496849	Zinc (Zn)-Total	0.000803	0.000876	0.000043	mg/dm2.day	8.6	20	-			✔	Dustfall	Metals

Qualifier Legend

DUP-H	Duplicate results outside ALS DQO, due to sample heterogeneity.
DUP-H,J	Duplicate results outside ALS DQO, due to sample heterogeneity. Duplicate results and limits are expressed in terms of absolute difference.

Evaluation Legend

✔	QC Lot met ALS Data Quality Objectives
✖	QC Lot did not meet ALS Data Quality Objectives

Quality Control L2600818

Job Reference NEW GOLD RRP
Report To Sarah Flesher, New Gold Inc. Rainy River Project
Date Received 14-Jun-2021 10:00
Report Date 7-Jul-2021 14:12
Report Version 1

QC Type	Analyte	QC Lot #	ALS QC ID	Result	Target	Units	%	Limit	Units	Qual	Eval	Matrix	Class
Total Metals (Filter)													
LCS	Arsenic (As)	1494383	WG3562783-2	45.0	45	ug	100.0	80-120	%		✓	Filter	Total Metals
LCS	Cadmium (Cd)	1494383	WG3562783-2	22.8	22.5	ug	101.2	80-120	%		✓	Filter	Total Metals
LCS	Chromium (Cr)	1494383	WG3562783-2	45.9	45	ug	102.0	80-120	%		✓	Filter	Total Metals
LCS	Cobalt (Co)	1494383	WG3562783-2	45.5	45	ug	101.0	80-120	%		✓	Filter	Total Metals
LCS	Copper (Cu)	1494383	WG3562783-2	45.5	45	ug	101.0	80-120	%		✓	Filter	Total Metals
LCS	Iron (Fe)	1494383	WG3562783-2	225	225	ug	100.0	80-120	%		✓	Filter	Total Metals
LCS	Lead (Pb)	1494383	WG3562783-2	45.5	45	ug	101.0	80-120	%		✓	Filter	Total Metals
LCS	Manganese (Mn)	1494383	WG3562783-2	44.5	45	ug	98.9	80-120	%		✓	Filter	Total Metals
LCS	Nickel (Ni)	1494383	WG3562783-2	45.0	45	ug	100.0	80-120	%		✓	Filter	Total Metals
LCS	Selenium (Se)	1494383	WG3562783-2	44.7	45	ug	99.4	80-120	%		✓	Filter	Total Metals
LCS	Vanadium (V)	1494383	WG3562783-2	46.4	45	ug	103.0	80-120	%		✓	Filter	Total Metals
LCS	Zinc (Zn)	1494383	WG3562783-2	90.5	90	ug	100.5	80-120	%		✓	Filter	Total Metals
Particulates (Filter)													
MB	Total particulate	1490801	WG3558134-7	<100		ug	-	<100	ug		✓	Filter	Particulates
MB	Total particulate	1490802	WG3558134-10	<15		ug	-	<15	ug		✓	Filter	Particulates
Total Metals (Filter)													
MB	Arsenic (As)	1494383	WG3562783-1	<3.0		ug	-	<3.0	ug		✓	Filter	Total Metals
MB	Cadmium (Cd)	1494383	WG3562783-1	<0.027		ug	-	<0.027	ug		✓	Filter	Total Metals
MB	Chromium (Cr)	1494383	WG3562783-1	<3.4		ug	-	<3.4	ug		✓	Filter	Total Metals
MB	Cobalt (Co)	1494383	WG3562783-1	<0.030		ug	-	<0.030	ug		✓	Filter	Total Metals
MB	Copper (Cu)	1494383	WG3562783-1	<1.0		ug	-	<1.0	ug		✓	Filter	Total Metals
MB	Iron (Fe)	1494383	WG3562783-1	<12		ug	-	<12	ug		✓	Filter	Total Metals
MB	Lead (Pb)	1494383	WG3562783-1	<0.12		ug	-	<0.12	ug		✓	Filter	Total Metals
MB	Manganese (Mn)	1494383	WG3562783-1	<0.45		ug	-	<0.45	ug		✓	Filter	Total Metals
MB	Nickel (Ni)	1494383	WG3562783-1	<0.25		ug	-	<0.25	ug		✓	Filter	Total Metals
MB	Selenium (Se)	1494383	WG3562783-1	<1.3		ug	-	<1.3	ug		✓	Filter	Total Metals
MB	Vanadium (V)	1494383	WG3562783-1	<5.0		ug	-	<10.0	ug		✓	Filter	Total Metals
MB	Zinc (Zn)	1494383	WG3562783-1	<4.5		ug	-	<4.5	ug		✓	Filter	Total Metals
MS	Arsenic (As)	1494383	SOUTH-TSP-361	45.0	45.7	ug	98.5	75-125	%		✓	Filter	Total Metals
MS	Cadmium (Cd)	1494383	SOUTH-TSP-361	22.3	22.6	ug	98.9	75-125	%		✓	Filter	Total Metals
MS	Chromium (Cr)	1494383	SOUTH-TSP-361	48.2	48.6	ug	99.1	75-125	%		✓	Filter	Total Metals
MS	Cobalt (Co)	1494383	SOUTH-TSP-361	43.3	45.4	ug	95.4	75-125	%		✓	Filter	Total Metals
MS	Copper (Cu)	1494383	SOUTH-TSP-361	176	177	ug	N/A	-	%	MS-B		Filter	Total Metals
MS	Iron (Fe)	1494383	SOUTH-TSP-361	1250	1200	ug	N/A	-	%	MS-B		Filter	Total Metals
MS	Lead (Pb)	1494383	SOUTH-TSP-361	45.5	46.9	ug	96.8	75-125	%		✓	Filter	Total Metals
MS	Manganese (Mn)	1494383	SOUTH-TSP-361	87.8	79.7	ug	118.0	75-125	%		✓	Filter	Total Metals
MS	Nickel (Ni)	1494383	SOUTH-TSP-361	45.9	46.6	ug	98.4	75-125	%		✓	Filter	Total Metals
MS	Selenium (Se)	1494383	SOUTH-TSP-361	47.7	45.1	ug	105.8	75-125	%		✓	Filter	Total Metals
MS	Vanadium (V)	1494383	SOUTH-TSP-361	45.5	46.4	ug	98.0	75-125	%		✓	Filter	Total Metals
MS	Zinc (Zn)	1494383	SOUTH-TSP-361	104	111	ug	92.9	75-125	%		✓	Filter	Total Metals

Quality Control L2600818

Job Reference NEW GOLD RRP
Report To Sarah Flesher, New Gold Inc. Rainy River Project
Date Received 14-Jun-2021 10:00
Report Date 7-Jul-2021 14:12
Report Version 1

QC Type	Analyte	QC Lot #	ALS QC ID	Result	Target	Units	%	Limit	Units	Qual	Eval	Matrix	Class
Metals (Dustfall)													
LCS	Aluminum (Al)-Total	1496849	WG3565968-2	0.0541	0.0524	mg/dm2.day	103.2	80-120	%		✓	Dustfall	Metals
LCS	Antimony (Sb)-Total	1496849	WG3565968-2	0.0277	0.0262	mg/dm2.day	105.6	80-120	%		✓	Dustfall	Metals
LCS	Arsenic (As)-Total	1496849	WG3565968-2	0.0259	0.0262	mg/dm2.day	98.9	80-120	%		✓	Dustfall	Metals
LCS	Barium (Ba)-Total	1496849	WG3565968-2	0.00656	0.00655	mg/dm2.day	100.2	80-120	%		✓	Dustfall	Metals
LCS	Beryllium (Be)-Total	1496849	WG3565968-2	0.00263	0.00262	mg/dm2.day	100.5	80-120	%		✓	Dustfall	Metals
LCS	Bismuth (Bi)-Total	1496849	WG3565968-2	0.0260	0.0262	mg/dm2.day	99.4	80-120	%		✓	Dustfall	Metals
LCS	Boron (B)-Total	1496849	WG3565968-2	0.0266	0.0262	mg/dm2.day	101.6	80-120	%		✓	Dustfall	Metals
LCS	Cadmium (Cd)-Total	1496849	WG3565968-2	0.00267	0.00262	mg/dm2.day	101.9	80-120	%		✓	Dustfall	Metals
LCS	Calcium (Ca)-Total	1496849	WG3565968-2	1.31	1.31	mg/dm2.day	99.8	80-120	%		✓	Dustfall	Metals
LCS	Chromium (Cr)-Total	1496849	WG3565968-2	0.00677	0.00655	mg/dm2.day	103.3	80-120	%		✓	Dustfall	Metals
LCS	Cobalt (Co)-Total	1496849	WG3565968-2	0.00670	0.00655	mg/dm2.day	102.3	80-120	%		✓	Dustfall	Metals
LCS	Copper (Cu)-Total	1496849	WG3565968-2	0.00657	0.00655	mg/dm2.day	100.3	80-120	%		✓	Dustfall	Metals
LCS	Iron (Fe)-Total	1496849	WG3565968-2	0.0274	0.0262	mg/dm2.day	104.4	80-120	%		✓	Dustfall	Metals
LCS	Lead (Pb)-Total	1496849	WG3565968-2	0.0136	0.0131	mg/dm2.day	103.5	80-120	%		✓	Dustfall	Metals
LCS	Lithium (Li)-Total	1496849	WG3565968-2	0.00666	0.00655	mg/dm2.day	101.6	80-120	%		✓	Dustfall	Metals
LCS	Magnesium (Mg)-Total	1496849	WG3565968-2	1.35	1.31	mg/dm2.day	103.4	80-120	%		✓	Dustfall	Metals
LCS	Manganese (Mn)-Total	1496849	WG3565968-2	0.00657	0.00655	mg/dm2.day	100.3	80-120	%		✓	Dustfall	Metals
LCS	Molybdenum (Mo)-Total	1496849	WG3565968-2	0.00667	0.00655	mg/dm2.day	101.8	80-120	%		✓	Dustfall	Metals
LCS	Nickel (Ni)-Total	1496849	WG3565968-2	0.0130	0.0131	mg/dm2.day	99.2	80-120	%		✓	Dustfall	Metals
LCS	Phosphorus (P)-Total	1496849	WG3565968-2	0.282	0.262	mg/dm2.day	107.8	80-120	%		✓	Dustfall	Metals
LCS	Potassium (K)-Total	1496849	WG3565968-2	1.40	1.31	mg/dm2.day	106.6	80-120	%		✓	Dustfall	Metals
LCS	Selenium (Se)-Total	1496849	WG3565968-2	0.0265	0.0262	mg/dm2.day	101.2	80-120	%		✓	Dustfall	Metals
LCS	Silicon (Si)-Total	1496849	WG3565968-2	0.262	0.262	mg/dm2.day	100.0	80-120	%		✓	Dustfall	Metals
LCS	Silver (Ag)-Total	1496849	WG3565968-2	0.00261	0.00262	mg/dm2.day	99.6	80-120	%		✓	Dustfall	Metals
LCS	Sodium (Na)-Total	1496849	WG3565968-2	1.35	1.31	mg/dm2.day	103.0	80-120	%		✓	Dustfall	Metals
LCS	Strontium (Sr)-Total	1496849	WG3565968-2	0.00705	0.00655	mg/dm2.day	107.6	80-120	%		✓	Dustfall	Metals
LCS	Thallium (Tl)-Total	1496849	WG3565968-2	0.0255	0.0262	mg/dm2.day	97.2	80-120	%		✓	Dustfall	Metals
LCS	Tin (Sn)-Total	1496849	WG3565968-2	0.0127	0.0131	mg/dm2.day	97.2	80-120	%		✓	Dustfall	Metals
LCS	Titanium (Ti)-Total	1496849	WG3565968-2	0.00666	0.00655	mg/dm2.day	101.7	80-120	%		✓	Dustfall	Metals
LCS	Uranium (U)-Total	1496849	WG3565968-2	0.000139	0.000131	mg/dm2.day	106.4	80-120	%		✓	Dustfall	Metals
LCS	Vanadium (V)-Total	1496849	WG3565968-2	0.0134	0.0131	mg/dm2.day	102.0	80-120	%		✓	Dustfall	Metals
LCS	Zinc (Zn)-Total	1496849	WG3565968-2	0.0126	0.0131	mg/dm2.day	96.1	80-120	%		✓	Dustfall	Metals
Particulates (Dustfall)													
MB	Fixed Dustfall	1497132	WG3566345-1	<0.10		mg/dm2.day	-	<0.10	mg/dm2.day		✓	Dustfall	Particulates
MB	Volatile Dustfall	1497132	WG3566345-1	<0.10		mg/dm2.day	-	<0.10	mg/dm2.day		✓	Dustfall	Particulates
MB	Total Dustfall	1497132	WG3566345-1	<0.10		mg/dm2.day	-	<0.10	mg/dm2.day		✓	Dustfall	Particulates
MB	Fixed Insoluble Dustfall	1497132	WG3566345-1	<0.10		mg/dm2.day	-	<0.10	mg/dm2.day		✓	Dustfall	Particulates
MB	Volatile Insoluble Dustfall	1497132	WG3566345-1	<0.10		mg/dm2.day	-	<0.10	mg/dm2.day		✓	Dustfall	Particulates
MB	Total Insoluble Dustfall	1497132	WG3566345-1	<0.10		mg/dm2.day	-	<0.10	mg/dm2.day		✓	Dustfall	Particulates
MB	Fixed Soluble Dustfall	1497132	WG3566345-1	<0.10		mg/dm2.day	-	<0.10	mg/dm2.day		✓	Dustfall	Particulates
MB	Volatile Soluble Dustfall	1497132	WG3566345-1	<0.10		mg/dm2.day	-	<0.10	mg/dm2.day		✓	Dustfall	Particulates
MB	Total Soluble Dustfall	1497132	WG3566345-1	<0.10		mg/dm2.day	-	<0.10	mg/dm2.day		✓	Dustfall	Particulates

Quality Control L2600818

Job Reference NEW GOLD RRP
Report To Sarah Flesher, New Gold Inc. Rainy River Project
Date Received 14-Jun-2021 10:00
Report Date 7-Jul-2021 14:12
Report Version 1

QC Type	Analyte	QC Lot #	ALS QC ID	Result	Target	Units	%	Limit	Units	Qual	Eval	Matrix	Class
Metals (Dustfall)													
MB	Aluminum (Al)-Total	1496849	WG3565968-1	0.000098		mg/dm2.day	-	<0.000079	mg/dm2.day	B	✗	Dustfall	Metals
MB	Antimony (Sb)-Total	1496849	WG3565968-1	<0.0000026		mg/dm2.day	-	<0.0000026	mg/dm2.day		✓	Dustfall	Metals
MB	Arsenic (As)-Total	1496849	WG3565968-1	<0.0000026		mg/dm2.day	-	<0.0000026	mg/dm2.day		✓	Dustfall	Metals
MB	Barium (Ba)-Total	1496849	WG3565968-1	0.0000017		mg/dm2.day	-	<0.0000013	mg/dm2.day	B	✗	Dustfall	Metals
MB	Beryllium (Be)-Total	1496849	WG3565968-1	<0.000013		mg/dm2.day	-	<0.000013	mg/dm2.day		✓	Dustfall	Metals
MB	Bismuth (Bi)-Total	1496849	WG3565968-1	<0.000013		mg/dm2.day	-	<0.000013	mg/dm2.day		✓	Dustfall	Metals
MB	Boron (B)-Total	1496849	WG3565968-1	<0.00026		mg/dm2.day	-	<0.00026	mg/dm2.day		✓	Dustfall	Metals
MB	Cadmium (Cd)-Total	1496849	WG3565968-1	<0.0000013		mg/dm2.day	-	<0.0000013	mg/dm2.day		✓	Dustfall	Metals
MB	Calcium (Ca)-Total	1496849	WG3565968-1	0.00061		mg/dm2.day	-	<0.00052	mg/dm2.day	B	✗	Dustfall	Metals
MB	Chromium (Cr)-Total	1496849	WG3565968-1	<0.000013		mg/dm2.day	-	<0.000013	mg/dm2.day		✓	Dustfall	Metals
MB	Cobalt (Co)-Total	1496849	WG3565968-1	<0.0000026		mg/dm2.day	-	<0.0000026	mg/dm2.day		✓	Dustfall	Metals
MB	Copper (Cu)-Total	1496849	WG3565968-1	<0.000013		mg/dm2.day	-	<0.000013	mg/dm2.day		✓	Dustfall	Metals
MB	Iron (Fe)-Total	1496849	WG3565968-1	<0.00079		mg/dm2.day	-	<0.00079	mg/dm2.day		✓	Dustfall	Metals
MB	Lead (Pb)-Total	1496849	WG3565968-1	<0.0000013		mg/dm2.day	-	<0.0000013	mg/dm2.day		✓	Dustfall	Metals
MB	Lithium (Li)-Total	1496849	WG3565968-1	<0.00013		mg/dm2.day	-	<0.00013	mg/dm2.day		✓	Dustfall	Metals
MB	Magnesium (Mg)-Total	1496849	WG3565968-1	<0.00013		mg/dm2.day	-	<0.00013	mg/dm2.day		✓	Dustfall	Metals
MB	Manganese (Mn)-Total	1496849	WG3565968-1	<0.0000026		mg/dm2.day	-	<0.0000026	mg/dm2.day		✓	Dustfall	Metals
MB	Molybdenum (Mo)-Total	1496849	WG3565968-1	0.0000072		mg/dm2.day	-	<0.0000013	mg/dm2.day	MB-LOR	✗	Dustfall	Metals
MB	Nickel (Ni)-Total	1496849	WG3565968-1	<0.000013		mg/dm2.day	-	<0.000013	mg/dm2.day		✓	Dustfall	Metals
MB	Phosphorus (P)-Total	1496849	WG3565968-1	<0.0013		mg/dm2.day	-	<0.0013	mg/dm2.day		✓	Dustfall	Metals
MB	Potassium (K)-Total	1496849	WG3565968-1	<0.0013		mg/dm2.day	-	<0.0013	mg/dm2.day		✓	Dustfall	Metals
MB	Selenium (Se)-Total	1496849	WG3565968-1	<0.000026		mg/dm2.day	-	<0.000026	mg/dm2.day		✓	Dustfall	Metals
MB	Silicon (Si)-Total	1496849	WG3565968-1	<0.0013		mg/dm2.day	-	<0.0013	mg/dm2.day		✓	Dustfall	Metals
MB	Silver (Ag)-Total	1496849	WG3565968-1	<0.00000026		mg/dm2.day	-	<0.00000026	mg/dm2.day		✓	Dustfall	Metals
MB	Sodium (Na)-Total	1496849	WG3565968-1	<0.0013		mg/dm2.day	-	<0.0013	mg/dm2.day		✓	Dustfall	Metals
MB	Strontium (Sr)-Total	1496849	WG3565968-1	<0.0000026		mg/dm2.day	-	<0.0000026	mg/dm2.day		✓	Dustfall	Metals
MB	Thallium (Tl)-Total	1496849	WG3565968-1	<0.0000026		mg/dm2.day	-	<0.0000026	mg/dm2.day		✓	Dustfall	Metals
MB	Tin (Sn)-Total	1496849	WG3565968-1	<0.0000026		mg/dm2.day	-	<0.0000026	mg/dm2.day		✓	Dustfall	Metals
MB	Titanium (Ti)-Total	1496849	WG3565968-1	<0.00026		mg/dm2.day	-	<0.00026	mg/dm2.day		✓	Dustfall	Metals
MB	Uranium (U)-Total	1496849	WG3565968-1	<0.00000026		mg/dm2.day	-	<0.00000026	mg/dm2.day		✓	Dustfall	Metals
MB	Vanadium (V)-Total	1496849	WG3565968-1	<0.000026		mg/dm2.day	-	<0.000026	mg/dm2.day		✓	Dustfall	Metals
MB	Zinc (Zn)-Total	1496849	WG3565968-1	<0.000079		mg/dm2.day	-	<0.000079	mg/dm2.day		✓	Dustfall	Metals

Qualifier Legend

B	Method Blank exceeds ALS DQO. Associated sample results which are < Limit of Reporting or > 5 times blank level are considered reliable.
MB-LOR	Method Blank exceeds ALS DQO. Limits of Reporting have been adjusted for samples with positive hits below 5x blank level.
MS-B	Matrix Spike recovery could not be accurately calculated due to high analyte background in sample.

Evaluation Legend

✓	QC Lot met ALS Data Quality Objectives
✗	QC Lot did not meet ALS Data Quality Objectives

Methodology L2600818

Job Reference	NEW GOLD RRP
Report To	Sarah Flesher, New Gold Inc. Rainy River Project
Date Received	14-Jun-2021 10:00
Report Date	7-Jul-2021 14:12
Report Version	1

ALS Test Code	ALS Test Description	Lab Location	Matrix	Method Reference	Methodology Description
Particulates (Dustfall)					
DUSTFALLS-ALL-DM2-VA	Dustfalls-Total, Soluble, Insoluble +FV	Vancouver	Dustfall	BC LAB MANUAL - PARTICULATE	This analysis is carried out using procedures modified from British Columbia Environmental Manual "Particulate." Particulates or "Dustfalls" are determined gravimetrically. Total Insoluble and Soluble Dustfalls are determined by filtering a sample through a 0.45 um membrane filter and drying the filter and filtrate at 104 C, followed by ignition at 550 C. The remaining residue after 550 C represents the fixed portion and the weight lost on ignition represents the volatile portion. The sum of all fixed and volatile portions on both Insoluble and Soluble portions represents Total Dustfalls.
PART-HIVOL-GRAV-BU	Particulate on High Volume Filter	Burlington	Filter	USEPA IO3.1	
PART-M212 F-GRAV-BU	PM via Gravimetric Analysis	Burlington	Filter	EPA QA Guidance Document 2.12	The particulate matter collected onto tare-weighed 47mm Teflon Disc filter media is desiccated then brought to a constant weight on an analytical balance. Results are presented in ug (per filter). An air volume can be included to allow for reporting in ug/m3.
Particulates (Filter)					
DUSTFALLS-ALL-DM2-VA	Dustfalls-Total, Soluble, Insoluble +FV	Vancouver	Dustfall	BC LAB MANUAL - PARTICULATE	This analysis is carried out using procedures modified from British Columbia Environmental Manual "Particulate." Particulates or "Dustfalls" are determined gravimetrically. Total Insoluble and Soluble Dustfalls are determined by filtering a sample through a 0.45 um membrane filter and drying the filter and filtrate at 104 C, followed by ignition at 550 C. The remaining residue after 550 C represents the fixed portion and the weight lost on ignition represents the volatile portion. The sum of all fixed and volatile portions on both Insoluble and Soluble portions represents Total Dustfalls.
PART-HIVOL-GRAV-BU	Particulate on High Volume Filter	Burlington	Filter	USEPA IO3.1	
PART-M212 F-GRAV-BU	PM via Gravimetric Analysis	Burlington	Filter	EPA QA Guidance Document 2.12	The particulate matter collected onto tare-weighed 47mm Teflon Disc filter media is desiccated then brought to a constant weight on an analytical balance. Results are presented in ug (per filter). An air volume can be included to allow for reporting in ug/m3.
Metals (Dustfall)					
MET-DUST(DM2)-MS-VA	Total Metals in Dustfalls by ICPMS	Vancouver	Dustfall	EPA 6020A	This analysis is carried out using procedures adapted from "Standard Methods for the Examination of Water and Wastewater" published by the American Public Health Association, and with procedures adapted from "Test Methods for Evaluating Solid Waste" SW-846 published by the United States Environmental Protection Agency (EPA). Instrumental analysis is by inductively coupled plasma - mass spectrometry (EPA Method 6020A).
Total Metals (Filter)					
MET-IO3.5-MS-BU	Metals on High Volume Filter by ICPMS	Burlington	Filter	IO3.5	After weighing (if required), hivol filters are sub-sampled and leached with nitric acid to extract available metal analytes. After dilution, the extracts are submitted to the ICPMS instrument for analysis.

Detection Limits L2600818

Job Reference NEW GOLD RRP
Report To Sarah Flesher, New Gold Inc. Rainy River Project
Date Received 14-Jun-2021 10:00
Report Date 7-Jul-2021 14:12
Report Version 1

Client Sample ID		SOUTH-TSP-361	SOUTH-TSP-362	SOUTH-TSP-363	SOUTH-TSP-364	SOUTH-TSP-365	NORTH-TSP-361	NORTH-TSP-362	NORTH-TSP-363	NORTH-TSP-364	NORTH-TSP-365
Date Sampled		4-May-2021	10-May-2021	16-May-2021	22-May-2021	28-May-2021	4-May-2021	10-May-2021	16-May-2021	22-May-2021	28-May-2021
Time Sampled		0:00	0:00	0:00	0:00	0:00	0:00	0:00	0:00	0:00	0:00
ALS Sample ID		L2600818-1	L2600818-2	L2600818-3	L2600818-4	L2600818-5	L2600818-6	L2600818-7	L2600818-8	L2600818-9	L2600818-10
Parameter	Units	Filter	Filter	Filter	Filter	Filter	Filter	Filter	Filter	Filter	Filter
Particulates (Filter)											
Total particulate	ug	2300	2300	2300	2300	2300	2300	2300	2300	2300	2300
Total Metals (Filter)											
Arsenic (As)	ug	3.0	3.0	3.0	3.0	3.0	3.0	3.0	3.0	3.0	3.0
Cadmium (Cd)	ug	2.0	2.0	2.0	2.0	2.0	2.0	2.0	2.0	2.0	2.0
Chromium (Cr)	ug	5.0	5.0	5.0	5.0	5.0	5.0	5.0	5.0	5.0	5.0
Cobalt (Co)	ug	2.0	2.0	2.0	2.0	2.0	2.0	2.0	2.0	2.0	2.0
Copper (Cu)	ug	4.0	4.0	4.0	4.0	4.0	4.0	4.0	4.0	4.0	4.0
Iron (Fe)	ug	20	20	20	20	20	20	20	20	20	20
Lead (Pb)	ug	3.0	3.0	3.0	3.0	3.0	3.0	3.0	3.0	3.0	3.0
Manganese (Mn)	ug	1.0	1.0	1.0	1.0	1.0	1.0	1.0	1.0	1.0	1.0
Nickel (Ni)	ug	3.0	3.0	3.0	3.0	3.0	3.0	3.0	3.0	3.0	3.0
Selenium (Se)	ug	10	10	10	10	10	10	10	10	10	10
Vanadium (V)	ug	5.0	5.0	5.0	5.0	5.0	5.0	5.0	5.0	5.0	5.0
Zinc (Zn)	ug	5.0	5.0	5.0	5.0	5.0	5.0	5.0	5.0	5.0	5.0

Detection Limits L2600818

Job Reference NEW GOLD RRP
Report To Sarah Flesher, New Gold
Date Received 14-Jun-2021 10:00
Report Date 7-Jul-2021 14:12
Report Version 1

Client Sample ID		NORTHWEST-TSP-361	NORTHWEST-TSP-362	NORTHWEST-TSP-363	NORTHWEST-TSP-364	NORTHWEST-TSP-365	TSP-TRAVEL BLANK	SOUTH-PM2.5-361	SOUTH-PM2.5-362	SOUTH-PM2.5-363	SOUTH-PM2.5-364	SOUTH-PM2.5-365
Date Sampled		4-May-2021	10-May-2021	16-May-2021	22-May-2021	28-May-2021	8-Jun-2021	4-May-2021	10-May-2021	16-May-2021	22-May-2021	28-May-2021
Time Sampled		0:00	0:00	0:00	0:00	0:00	0:00	0:00	0:00	0:00	0:00	0:00
ALS Sample ID		L2600818-11	L2600818-12	L2600818-13	L2600818-14	L2600818-15	L2600818-16	L2600818-17	L2600818-18	L2600818-19	L2600818-20	L2600818-21
Parameter	Units	Filter	Filter	Filter	Filter	Filter	Filter	Filter	Filter	Filter	Filter	Filter
Particulates (Filter)												
Total particulate	ug	2300	2300	2300	2300	2300	2300	15	15	15	15	15
Total Metals (Filter)												
Arsenic (As)	ug	3.0	3.0	3.0	3.0	3.0	3.0					
Cadmium (Cd)	ug	2.0	2.0	2.0	2.0	2.0	2.0					
Chromium (Cr)	ug	5.0	5.0	5.0	5.0	5.0	5.0					
Cobalt (Co)	ug	2.0	2.0	2.0	2.0	2.0	2.0					
Copper (Cu)	ug	4.0	4.0	4.0	4.0	4.0	4.0					
Iron (Fe)	ug	20	20	20	20	20	20					
Lead (Pb)	ug	3.0	3.0	3.0	3.0	3.0	3.0					
Manganese (Mn)	ug	1.0	1.0	1.0	1.0	1.0	1.0					
Nickel (Ni)	ug	3.0	3.0	3.0	3.0	3.0	3.0					
Selenium (Se)	ug	10	10	10	10	10	10					
Vanadium (V)	ug	5.0	5.0	5.0	5.0	5.0	5.0					
Zinc (Zn)	ug	5.0	5.0	5.0	5.0	5.0	5.0					

Detection Limits L2600818

Job Reference NEW GOLD RRP
Report To Sarah Flesher, New Gold
Date Received 14-Jun-2021 10:00
Report Date 7-Jul-2021 14:12
Report Version 1

Client Sample ID		NORTH-PM2.5-361	NORTH-PM2.5-362	NORTH-PM2.5-363	NORTH-PM2.5-364	NORTH-PM2.5-365	NORTHWEST-PM2.5-361	NORTHWEST-PM2.5-362	NORTHWEST-PM2.5-363	NORTHWEST-PM2.5-364	NORTHWEST-PM2.5-365	PM2.5-TRAVEL BLANK
Date Sampled		4-May-2021	10-May-2021	16-May-2021	22-May-2021	28-May-2021	4-May-2021	10-May-2021	16-May-2021	22-May-2021	28-May-2021	8-Jun-2021
Time Sampled		0:00	0:00	0:00	0:00	0:00	0:00	0:00	0:00	0:00	0:00	0:00
ALS Sample ID		L2600818-22	L2600818-23	L2600818-24	L2600818-25	L2600818-26	L2600818-27	L2600818-28	L2600818-29	L2600818-30	L2600818-31	L2600818-32
Parameter	Units	Filter	Filter	Filter	Filter	Filter	Filter	Filter	Filter	Filter	Filter	Filter
Particulates (Filter)												
Total particulate	ug	15	15	15	15	15	15	15	15	15	15	15
Total Metals (Filter)												
Arsenic (As)	ug											
Cadmium (Cd)	ug											
Chromium (Cr)	ug											
Cobalt (Co)	ug											
Copper (Cu)	ug											
Iron (Fe)	ug											
Lead (Pb)	ug											
Manganese (Mn)	ug											
Nickel (Ni)	ug											
Selenium (Se)	ug											
Vanadium (V)	ug											
Zinc (Zn)	ug											

Detection Limits L2600818

Job Reference NEW GOLD RRP
Report To Sarah Flesher, New Gold
Date Received 14-Jun-2021 10:00
Report Date 7-Jul-2021 14:12
Report Version 1

Client Sample ID		NOP1-DUSTFALL-5	CP1-DUSTFALL-5	WCP1-DUSTFALL-5	GH1-DUSTFALL-5	SPP1-DUSTFALL-22	SPP1-DUSTFALL-23	SPP1-DUSTFALL-24	DUSTFALL-GALLINGER ROAD	DUSTFALL-TAIT ROAD (SOUTH)	DUSTFALL-NORTHWEST
Date Sampled		31-May-2021 0:00	31-May-2021 0:00	31-May-2021 0:00	31-May-2021 0:00	12-May-2021 0:00	19-May-2021 0:00	26-May-2021 0:00	31-May-2021 0:00	31-May-2021 0:00	31-May-2021 0:00
Time Sampled											
ALS Sample ID		L2600818-33	L2600818-34	L2600818-35	L2600818-36	L2600818-37	L2600818-38	L2600818-39	L2600818-40	L2600818-41	L2600818-42
Parameter	Units	Dustfall	Dustfall	Dustfall	Dustfall	Dustfall	Dustfall	Dustfall	Dustfall	Dustfall	Dustfall
Particulates (Filter)											
Total particulate	ug										
Total Metals (Filter)											
Arsenic (As)	ug										
Cadmium (Cd)	ug										
Chromium (Cr)	ug										
Cobalt (Co)	ug										
Copper (Cu)	ug										
Iron (Fe)	ug										
Lead (Pb)	ug										
Manganese (Mn)	ug										
Nickel (Ni)	ug										
Selenium (Se)	ug										
Vanadium (V)	ug										
Zinc (Zn)	ug										

Detection Limits L2600818

Job Reference NEW GOLD RRP
Report To Sarah Flesher, New Gold Inc. Rainy River Project
Date Received 14-Jun-2021 10:00
Report Date 7-Jul-2021 14:12
Report Version 1

Client Sample ID		SOUTH-TSP-361	SOUTH-TSP-362	SOUTH-TSP-363	SOUTH-TSP-364	SOUTH-TSP-365	NORTH-TSP-361	NORTH-TSP-362	NORTH-TSP-363	NORTH-TSP-364	NORTH-TSP-365
Date Sampled		4-May-2021	10-May-2021	16-May-2021	22-May-2021	28-May-2021	4-May-2021	10-May-2021	16-May-2021	22-May-2021	28-May-2021
Time Sampled		0:00	0:00	0:00	0:00	0:00	0:00	0:00	0:00	0:00	0:00
ALS Sample ID		L2600818-1	L2600818-2	L2600818-3	L2600818-4	L2600818-5	L2600818-6	L2600818-7	L2600818-8	L2600818-9	L2600818-10
Parameter	Units	Filter	Filter	Filter	Filter	Filter	Filter	Filter	Filter	Filter	Filter
Particulates (Dustfall)											
Fixed Dustfall	mg/dm2.day										
Volatile Dustfall	mg/dm2.day										
Total Dustfall	mg/dm2.day										
Fixed Insoluble Dustfall	mg/dm2.day										
Volatile Insoluble Dustfall	mg/dm2.day										
Total Insoluble Dustfall	mg/dm2.day										
Fixed Soluble Dustfall	mg/dm2.day										
Volatile Soluble Dustfall	mg/dm2.day										
Total Soluble Dustfall	mg/dm2.day										
Metals (Dustfall)											
Aluminum (Al)-Total	mg/dm2.day										
Antimony (Sb)-Total	mg/dm2.day										
Arsenic (As)-Total	mg/dm2.day										
Barium (Ba)-Total	mg/dm2.day										
Beryllium (Be)-Total	mg/dm2.day										
Bismuth (Bi)-Total	mg/dm2.day										
Boron (B)-Total	mg/dm2.day										
Cadmium (Cd)-Total	mg/dm2.day										
Calcium (Ca)-Total	mg/dm2.day										
Chromium (Cr)-Total	mg/dm2.day										
Cobalt (Co)-Total	mg/dm2.day										
Copper (Cu)-Total	mg/dm2.day										
Iron (Fe)-Total	mg/dm2.day										
Lead (Pb)-Total	mg/dm2.day										
Lithium (Li)-Total	mg/dm2.day										
Magnesium (Mg)-Total	mg/dm2.day										
Manganese (Mn)-Total	mg/dm2.day										
Molybdenum (Mo)-Total	mg/dm2.day										
Nickel (Ni)-Total	mg/dm2.day										
Phosphorus (P)-Total	mg/dm2.day										
Potassium (K)-Total	mg/dm2.day										
Selenium (Se)-Total	mg/dm2.day										
Silicon (Si)-Total	mg/dm2.day										
Silver (Ag)-Total	mg/dm2.day										
Sodium (Na)-Total	mg/dm2.day										
Strontium (Sr)-Total	mg/dm2.day										
Thallium (Tl)-Total	mg/dm2.day										
Tin (Sn)-Total	mg/dm2.day										
Titanium (Ti)-Total	mg/dm2.day										
Uranium (U)-Total	mg/dm2.day										
Vanadium (V)-Total	mg/dm2.day										
Zinc (Zn)-Total	mg/dm2.day										

Detection Limits L2600818

Job Reference NEW GOLD RRP
Report To Sarah Flesher, New Gold
Date Received 14-Jun-2021 10:00
Report Date 7-Jul-2021 14:12
Report Version 1

Client Sample ID		NORTHWEST-TSP-361	NORTHWEST-TSP-362	NORTHWEST-TSP-363	NORTHWEST-TSP-364	NORTHWEST-TSP-365	TSP-TRAVEL BLANK	SOUTH-PM2.5-361	SOUTH-PM2.5-362	SOUTH-PM2.5-363	SOUTH-PM2.5-364	SOUTH-PM2.5-365
Date Sampled		4-May-2021	10-May-2021	16-May-2021	22-May-2021	28-May-2021	8-Jun-2021	4-May-2021	10-May-2021	16-May-2021	22-May-2021	28-May-2021
Time Sampled		0:00	0:00	0:00	0:00	0:00	0:00	0:00	0:00	0:00	0:00	0:00
ALS Sample ID		L2600818-11	L2600818-12	L2600818-13	L2600818-14	L2600818-15	L2600818-16	L2600818-17	L2600818-18	L2600818-19	L2600818-20	L2600818-21
Parameter	Units	Filter	Filter	Filter	Filter	Filter	Filter	Filter	Filter	Filter	Filter	Filter
Particulates (Dustfall)												
Fixed Dustfall	mg/dm2.day											
Volatile Dustfall	mg/dm2.day											
Total Dustfall	mg/dm2.day											
Fixed Insoluble Dustfall	mg/dm2.day											
Volatile Insoluble Dustfall	mg/dm2.day											
Total Insoluble Dustfall	mg/dm2.day											
Fixed Soluble Dustfall	mg/dm2.day											
Volatile Soluble Dustfall	mg/dm2.day											
Total Soluble Dustfall	mg/dm2.day											
Metals (Dustfall)												
Aluminum (Al)-Total	mg/dm2.day											
Antimony (Sb)-Total	mg/dm2.day											
Arsenic (As)-Total	mg/dm2.day											
Barium (Ba)-Total	mg/dm2.day											
Beryllium (Be)-Total	mg/dm2.day											
Bismuth (Bi)-Total	mg/dm2.day											
Boron (B)-Total	mg/dm2.day											
Cadmium (Cd)-Total	mg/dm2.day											
Calcium (Ca)-Total	mg/dm2.day											
Chromium (Cr)-Total	mg/dm2.day											
Cobalt (Co)-Total	mg/dm2.day											
Copper (Cu)-Total	mg/dm2.day											
Iron (Fe)-Total	mg/dm2.day											
Lead (Pb)-Total	mg/dm2.day											
Lithium (Li)-Total	mg/dm2.day											
Magnesium (Mg)-Total	mg/dm2.day											
Manganese (Mn)-Total	mg/dm2.day											
Molybdenum (Mo)-Total	mg/dm2.day											
Nickel (Ni)-Total	mg/dm2.day											
Phosphorus (P)-Total	mg/dm2.day											
Potassium (K)-Total	mg/dm2.day											
Selenium (Se)-Total	mg/dm2.day											
Silicon (Si)-Total	mg/dm2.day											
Silver (Ag)-Total	mg/dm2.day											
Sodium (Na)-Total	mg/dm2.day											
Strontium (Sr)-Total	mg/dm2.day											
Thallium (Tl)-Total	mg/dm2.day											
Tin (Sn)-Total	mg/dm2.day											
Titanium (Ti)-Total	mg/dm2.day											
Uranium (U)-Total	mg/dm2.day											
Vanadium (V)-Total	mg/dm2.day											
Zinc (Zn)-Total	mg/dm2.day											

Detection Limits L2600818

Job Reference NEW GOLD RRP
Report To Sarah Flesher, New Gold
Date Received 14-Jun-2021 10:00
Report Date 7-Jul-2021 14:12
Report Version 1

Client Sample ID		NORTH-PM2.5-361	NORTH-PM2.5-362	NORTH-PM2.5-363	NORTH-PM2.5-364	NORTH-PM2.5-365	NORTHWEST-PM2.5-361	NORTHWEST-PM2.5-362	NORTHWEST-PM2.5-363	NORTHWEST-PM2.5-364	NORTHWEST-PM2.5-365	PM2.5-TRAVEL BLANK
Date Sampled		4-May-2021	10-May-2021	16-May-2021	22-May-2021	28-May-2021	4-May-2021	10-May-2021	16-May-2021	22-May-2021	28-May-2021	8-Jun-2021
Time Sampled		0:00	0:00	0:00	0:00	0:00	0:00	0:00	0:00	0:00	0:00	0:00
ALS Sample ID		L2600818-22	L2600818-23	L2600818-24	L2600818-25	L2600818-26	L2600818-27	L2600818-28	L2600818-29	L2600818-30	L2600818-31	L2600818-32
Parameter	Units	Filter	Filter	Filter	Filter	Filter	Filter	Filter	Filter	Filter	Filter	Filter
Particulates (Dustfall)												
Fixed Dustfall	mg/dm2.day											
Volatile Dustfall	mg/dm2.day											
Total Dustfall	mg/dm2.day											
Fixed Insoluble Dustfall	mg/dm2.day											
Volatile Insoluble Dustfall	mg/dm2.day											
Total Insoluble Dustfall	mg/dm2.day											
Fixed Soluble Dustfall	mg/dm2.day											
Volatile Soluble Dustfall	mg/dm2.day											
Total Soluble Dustfall	mg/dm2.day											
Metals (Dustfall)												
Aluminum (Al)-Total	mg/dm2.day											
Antimony (Sb)-Total	mg/dm2.day											
Arsenic (As)-Total	mg/dm2.day											
Barium (Ba)-Total	mg/dm2.day											
Beryllium (Be)-Total	mg/dm2.day											
Bismuth (Bi)-Total	mg/dm2.day											
Boron (B)-Total	mg/dm2.day											
Cadmium (Cd)-Total	mg/dm2.day											
Calcium (Ca)-Total	mg/dm2.day											
Chromium (Cr)-Total	mg/dm2.day											
Cobalt (Co)-Total	mg/dm2.day											
Copper (Cu)-Total	mg/dm2.day											
Iron (Fe)-Total	mg/dm2.day											
Lead (Pb)-Total	mg/dm2.day											
Lithium (Li)-Total	mg/dm2.day											
Magnesium (Mg)-Total	mg/dm2.day											
Manganese (Mn)-Total	mg/dm2.day											
Molybdenum (Mo)-Total	mg/dm2.day											
Nickel (Ni)-Total	mg/dm2.day											
Phosphorus (P)-Total	mg/dm2.day											
Potassium (K)-Total	mg/dm2.day											
Selenium (Se)-Total	mg/dm2.day											
Silicon (Si)-Total	mg/dm2.day											
Silver (Ag)-Total	mg/dm2.day											
Sodium (Na)-Total	mg/dm2.day											
Strontium (Sr)-Total	mg/dm2.day											
Thallium (Tl)-Total	mg/dm2.day											
Tin (Sn)-Total	mg/dm2.day											
Titanium (Ti)-Total	mg/dm2.day											
Uranium (U)-Total	mg/dm2.day											
Vanadium (V)-Total	mg/dm2.day											
Zinc (Zn)-Total	mg/dm2.day											

Detection Limits L2600818

Job Reference NEW GOLD RRP
Report To Sarah Flesher, New Gold
Date Received 14-Jun-2021 10:00
Report Date 7-Jul-2021 14:12
Report Version 1

Client Sample ID		NOP1-DUSTFALL-5	CP1-DUSTFALL-5	WCP1-DUSTFALL-5	GH1-DUSTFALL-5	SPP1-DUSTFALL-22	SPP1-DUSTFALL-23	SPP1-DUSTFALL-24	DUSTFALL-GALLINGER ROAD	DUSTFALL-TAIT ROAD (SOUTH)	DUSTFALL-NORTHWEST
Date Sampled		31-May-2021	31-May-2021	31-May-2021	31-May-2021	12-May-2021	19-May-2021	26-May-2021	31-May-2021	31-May-2021	31-May-2021
Time Sampled		0:00	0:00	0:00	0:00	0:00	0:00	0:00	0:00	0:00	0:00
ALS Sample ID		L2600818-33	L2600818-34	L2600818-35	L2600818-36	L2600818-37	L2600818-38	L2600818-39	L2600818-40	L2600818-41	L2600818-42
Parameter	Units	Dustfall	Dustfall	Dustfall	Dustfall	Dustfall	Dustfall	Dustfall	Dustfall	Dustfall	Dustfall
Particulates (Dustfall)											
Fixed Dustfall	mg/dm2.day	0.11	0.11	0.11	0.11	0.43	0.43	0.43	0.11	0.11	0.11
Volatile Dustfall	mg/dm2.day	0.11	0.11	0.11	0.11	0.43	0.43	0.43	0.11	0.11	0.11
Total Dustfall	mg/dm2.day	0.11	0.11	0.11	0.11	0.43	0.43	0.43	0.11	0.11	0.11
Fixed Insoluble Dustfall	mg/dm2.day	0.11	0.11	0.11	0.11	0.43	0.43	0.43	0.11	0.11	0.11
Volatile Insoluble Dustfall	mg/dm2.day	0.11	0.11	0.11	0.11	0.43	0.43	0.43	0.11	0.11	0.11
Total Insoluble Dustfall	mg/dm2.day	0.11	0.11	0.11	0.11	0.43	0.43	0.43	0.11	0.11	0.11
Fixed Soluble Dustfall	mg/dm2.day	0.11	0.11	0.11	0.11	0.43	0.43	0.43	0.11	0.11	0.11
Volatile Soluble Dustfall	mg/dm2.day	0.11	0.11	0.11	0.11	0.43	0.43	0.43	0.11	0.11	0.11
Total Soluble Dustfall	mg/dm2.day	0.11	0.11	0.11	0.11	0.43	0.43	0.43	0.11	0.11	0.11
Metals (Dustfall)											
Aluminum (Al)-Total	mg/dm2.day	0.000043	0.000043	0.000043	0.000043	0.00020	0.00019	0.00024	0.000058	0.000064	0.000053
Antimony (Sb)-Total	mg/dm2.day	0.0000014	0.0000014	0.0000014	0.0000014	0.0000067	0.0000064	0.0000080	0.0000019	0.0000021	0.0000018
Arsenic (As)-Total	mg/dm2.day	0.0000014	0.0000014	0.0000014	0.0000014	0.0000067	0.0000064	0.0000080	0.0000019	0.0000021	0.0000018
Barium (Ba)-Total	mg/dm2.day	0.00000071	0.00000071	0.00000071	0.00000071	0.0000034	0.0000032	0.0000040	0.00000097	0.0000011	0.00000089
Beryllium (Be)-Total	mg/dm2.day	0.0000071	0.0000071	0.0000071	0.0000071	0.000034	0.000032	0.000040	0.0000097	0.000011	0.0000089
Bismuth (Bi)-Total	mg/dm2.day	0.0000071	0.0000071	0.0000071	0.0000071	0.000034	0.000032	0.000040	0.0000097	0.000011	0.0000089
Boron (B)-Total	mg/dm2.day	0.00014	0.00014	0.00014	0.00014	0.00067	0.00064	0.00080	0.00019	0.00021	0.00018
Cadmium (Cd)-Total	mg/dm2.day	0.00000071	0.00000071	0.00000071	0.00000071	0.0000034	0.0000032	0.0000040	0.00000097	0.0000011	0.00000089
Calcium (Ca)-Total	mg/dm2.day	0.00028	0.00028	0.00028	0.00028	0.0013	0.0013	0.0016	0.00039	0.00043	0.00035
Chromium (Cr)-Total	mg/dm2.day	0.0000071	0.0000071	0.0000071	0.0000071	0.000034	0.000032	0.000040	0.0000097	0.000011	0.0000089
Cobalt (Co)-Total	mg/dm2.day	0.0000014	0.0000014	0.0000014	0.0000014	0.0000067	0.0000064	0.0000080	0.0000019	0.0000021	0.0000018
Copper (Cu)-Total	mg/dm2.day	0.0000071	0.0000071	0.0000071	0.0000071	0.000034	0.000032	0.000040	0.0000097	0.000011	0.0000089
Iron (Fe)-Total	mg/dm2.day	0.00043	0.00043	0.00043	0.00043	0.0020	0.0019	0.0024	0.00058	0.00064	0.00053
Lead (Pb)-Total	mg/dm2.day	0.00000071	0.00000071	0.00000071	0.00000071	0.0000034	0.0000032	0.0000040	0.00000097	0.0000011	0.00000089
Lithium (Li)-Total	mg/dm2.day	0.000071	0.000071	0.000071	0.000071	0.00034	0.00032	0.00040	0.000097	0.00011	0.000089
Magnesium (Mg)-Total	mg/dm2.day	0.000071	0.000071	0.000071	0.000071	0.00034	0.00032	0.00040	0.000097	0.00011	0.000089
Manganese (Mn)-Total	mg/dm2.day	0.0000014	0.0000014	0.0000014	0.0000014	0.0000067	0.0000064	0.0000080	0.0000019	0.0000021	0.0000018
Molybdenum (Mo)-Total	mg/dm2.day	0.0000043	0.00000071	0.00000071	0.00000071	0.0000034	0.000039	0.000048	0.000013	0.0000011	0.0000035
Nickel (Ni)-Total	mg/dm2.day	0.0000071	0.0000071	0.0000071	0.0000071	0.000034	0.000032	0.000040	0.0000097	0.000011	0.0000089
Phosphorus (P)-Total	mg/dm2.day	0.00071	0.00071	0.00071	0.00071	0.0034	0.0032	0.0040	0.00097	0.0011	0.00089
Potassium (K)-Total	mg/dm2.day	0.00071	0.00071	0.00071	0.00071	0.0034	0.0032	0.0040	0.00097	0.0011	0.00089
Selenium (Se)-Total	mg/dm2.day	0.000014	0.000014	0.000014	0.000014	0.000067	0.000064	0.000080	0.000019	0.000021	0.000018
Silicon (Si)-Total	mg/dm2.day	0.00071	0.00071	0.00071	0.00071	0.0034	0.0032	0.0040	0.00097	0.0011	0.00089
Silver (Ag)-Total	mg/dm2.day	0.00000014	0.00000014	0.00000014	0.00000014	0.00000067	0.00000064	0.00000080	0.00000019	0.00000021	0.00000018
Sodium (Na)-Total	mg/dm2.day	0.00071	0.00071	0.00071	0.00071	0.0034	0.0032	0.0040	0.00097	0.0011	0.00089
Strontium (Sr)-Total	mg/dm2.day	0.0000014	0.0000014	0.0000014	0.0000014	0.0000067	0.0000064	0.0000080	0.0000019	0.0000021	0.0000018
Thallium (Tl)-Total	mg/dm2.day	0.0000014	0.0000014	0.0000014	0.0000014	0.0000067	0.0000064	0.0000080	0.0000019	0.0000021	0.0000018
Tin (Sn)-Total	mg/dm2.day	0.0000014	0.0000014	0.0000014	0.0000014	0.0000067	0.0000064	0.0000080	0.0000019	0.0000021	0.0000018
Titanium (Ti)-Total	mg/dm2.day	0.00014	0.00014	0.00014	0.00014	0.00067	0.00064	0.00080	0.00019	0.00021	0.00018
Uranium (U)-Total	mg/dm2.day	0.00000014	0.00000014	0.00000014	0.00000014	0.00000067	0.00000064	0.00000080	0.00000019	0.00000021	0.00000018
Vanadium (V)-Total	mg/dm2.day	0.000014	0.000014	0.000014	0.000014	0.000067	0.000064	0.000080	0.000019	0.000021	0.000018
Zinc (Zn)-Total	mg/dm2.day	0.000043	0.000043	0.000043	0.000043	0.00020	0.00019	0.00024	0.000058	0.000064	0.000053

Report To	Sarah Flesher, New Gold Inc. Rainy River Project 5967 Highway 11/71 P.O. Box 5 Emo, ON P0W 1E0	**Date Received** **Report Date** **Report Revision** **Version**	12-Jul-2021 10:00 9-Aug-2021 14:35 1 FINAL
Client Phone	807-234-8200		

Certificate of Analysis

Lab Work Order #	L2612385
Project P.O. #	4500050093
Job Reference	NEW GOLD RRP
Legal Site Description	
C of C Numbers	

Case Narrative/Comments

Work Order Qualifiers:

Temperature - 20.7ºC °

Claire Kocharakkal, B.Sc.
Account Manager

[This report shall not be reproduced except in full without the written authority of the Laboratory.]

Sample Summary L2612385

Job Reference	NEW GOLD RRP
Report To	Sarah Flesher, New Gold Inc. Rainy River Project
Date Received	12-Jul-2021 10:00
Report Date	9-Aug-2021 14:35
Report Version	1

Sample Details

ALS Sample ID	Client Sample ID	Matrix	Date Sampled	Time Sampled	Qualifier
L2612385-1	SOUTH-TSP-366	Hi Vol Filter	03-Jun-21	00:00	
L2612385-2	SOUTH-TSP-367	Hi Vol Filter	09-Jun-21	00:00	
L2612385-3	SOUTH-TSP-368	Hi Vol Filter	15-Jun-21	00:00	
L2612385-4	SOUTH-TSP-369	Hi Vol Filter	21-Jun-21	00:00	
L2612385-5	SOUTH-TSP-370	Hi Vol Filter	27-Jun-21	00:00	
L2612385-6	SOUTH-TSP-371	Hi Vol Filter	03-Jul-21	00:00	
L2612385-7	NORTH-TSP-366	Hi Vol Filter	03-Jun-21	00:00	
L2612385-8	NORTH-TSP-367	Hi Vol Filter	09-Jun-21	00:00	
L2612385-9	NORTH-TSP-368	Hi Vol Filter	15-Jun-21	00:00	
L2612385-10	NORTH-TSP-369	Hi Vol Filter	21-Jun-21	00:00	
L2612385-11	NORTH-TSP-370	Hi Vol Filter	27-Jun-21	00:00	
L2612385-12	NORTH-TSP-371	Hi Vol Filter	03-Jul-21	00:00	
L2612385-13	NORTHWEST-TSP-366	Hi Vol Filter	03-Jun-21	00:00	
L2612385-14	NORTHWEST-TSP-367	Hi Vol Filter	09-Jun-21	00:00	
L2612385-15	NORTHWEST-TSP-368	Hi Vol Filter	15-Jun-21	00:00	
L2612385-16	NORTHWEST-TSP-369	Hi Vol Filter	21-Jun-21	00:00	
L2612385-17	NORTHWEST-TSP-370	Hi Vol Filter	27-Jun-21	00:00	
L2612385-18	NORTHWEST-TSP-371	Hi Vol Filter	03-Jul-21	00:00	
L2612385-19	TSP-TRAVEL BLANK	Hi Vol Filter	07-Jul-21	00:00	
L2612385-20	SOUTH-PM2.5-366	47mm Filter	03-Jun-21	00:00	
L2612385-21	SOUTH-PM2.5-367	47mm Filter	09-Jun-21	00:00	
L2612385-22	SOUTH-PM2.5-368	47mm Filter	15-Jun-21	00:00	
L2612385-23	SOUTH-PM2.5-369	47mm Filter	21-Jun-21	00:00	
L2612385-24	SOUTH-PM2.5-370	47mm Filter	27-Jun-21	00:00	
L2612385-25	SOUTH-PM2.5-371	47mm Filter	03-Jul-21	00:00	
L2612385-26	NORTH-PM2.5-366	47mm Filter	03-Jun-21	00:00	
L2612385-27	NORTH-PM2.5-367	47mm Filter	09-Jun-21	00:00	
L2612385-28	NORTH-PM2.5-368	47mm Filter	15-Jun-21	00:00	
L2612385-29	NORTH-PM2.5-369	47mm Filter	21-Jun-21	00:00	
L2612385-30	NORTH-PM2.5-370	47mm Filter	27-Jun-21	00:00	
L2612385-31	NORTH-PM2.5-371	47mm Filter	03-Jul-21	00:00	
L2612385-32	NORTHWEST-PM2.5-366	47mm Filter	03-Jun-21	00:00	
L2612385-33	NORTHWEST-PM2.5-367	47mm Filter	09-Jun-21	00:00	
L2612385-34	NORTHWEST-PM2.5-368	47mm Filter	15-Jun-21	00:00	
L2612385-35	NORTHWEST-PM2.5-369	47mm Filter	21-Jun-21	00:00	
L2612385-36	NORTHWEST-PM2.5-370	47mm Filter	27-Jun-21	00:00	
L2612385-37	NORTHWEST-PM2.5-371	47mm Filter	03-Jul-21	00:00	
L2612385-38	PM2.5-TRAVEL BLANK	47mm Filter	07-Jul-21	00:00	
L2612385-39	NOP1-DUSTFALL-6	Dustfall	30-Jun-21	00:00	
L2612385-40	CP1-DUSTFALL-6	Dustfall	02-Jul-21	00:00	
L2612385-41	WCP1-DUSTFALL-6	Dustfall	02-Jul-21	00:00	
L2612385-42	GH1-DUSTFALL-6	Dustfall	02-Jul-21	00:00	
L2612385-43	SPP1-DUSTFALL-25	Dustfall	09-Jun-21	00:00	
L2612385-44	SPP1-DUSTFALL-26	Dustfall	16-Jun-21	00:00	
L2612385-45	SPP1-DUSTFALL-27	Dustfall	23-Jun-21	00:00	
L2612385-46	SPP1-DUSTFALL-28	Dustfall	30-Jun-21	00:00	
L2612385-47	DUSTFALL-GALLINGER ROAD	Dustfall	30-Jun-21	00:00	
L2612385-48	DUSTFALL-TAIT ROAD (SOUTH)	Dustfall	30-Jun-21	00:00	
L2612385-49	DUSTFALL-NORTHWEST	Dustfall	30-Jun-21	00:00	
L2612385-50	SUBLETS TO MAXXAM				

Results Summary L2612385

Job Reference NEW GOLD RRP
Report To Sarah Flesher, New Gold Inc. Rainy River Project
Date Received 12-Jul-2021 10:00
Report Date 9-Aug-2021 14:35
Report Version 1

Client Sample ID			SOUTH-TSP-366	SOUTH-TSP-367	SOUTH-TSP-368	SOUTH-TSP-369	SOUTH-TSP-370	SOUTH-TSP-371	NORTH-TSP-366	NORTH-TSP-367	NORTH-TSP-368	NORTH-TSP-369	NORTH-TSP-370	NORTH-TSP-371
Date Sampled			3-Jun-2021	9-Jun-2021	15-Jun-2021	21-Jun-2021	27-Jun-2021	3-Jul-2021	3-Jun-2021	9-Jun-2021	15-Jun-2021	21-Jun-2021	27-Jun-2021	3-Jul-2021
Time Sampled			0:00	0:00	0:00	0:00	0:00	0:00	0:00	0:00	0:00	0:00	0:00	0:00
ALS Sample ID			L2612385-1	L2612385-2	L2612385-3	L2612385-4	L2612385-5	L2612385-6	L2612385-7	L2612385-8	L2612385-9	L2612385-10	L2612385-11	L2612385-12
Parameter	Lowest Detection Limit	Units	Filter	Filter	Filter	Filter	Filter	Filter	Filter	Filter	Filter	Filter	Filter	Filter
Particulates (Filter)														
Total particulate	15	ug	65700	109000	120000	48200	30900	75300	62500	83800	86600	56900	86700	85400
Total Metals (Filter)														
Arsenic (As)	3.0	ug	<3.0	<3.0	<3.0	<3.0	<3.0	<3.0	<3.0	<3.0	<3.0	<3.0	<3.0	<3.0
Cadmium (Cd)	2.0	ug	<2.0	<2.0	<2.0	<2.0	<2.0	<2.0	<2.0	<2.0	<2.0	<2.0	<2.0	<2.0
Chromium (Cr)	5.0	ug	<5.0	<5.0	5.8	<5.0	<5.0	<5.0	<5.0	<5.0	<5.0	<5.0	<5.0	<5.0
Cobalt (Co)	2.0	ug	<2.0	<2.0	<2.0	<2.0	<2.0	<2.0	<2.0	<2.0	<2.0	<2.0	<2.0	<2.0
Copper (Cu)	4.0	ug	132	93.2	135	95.0	81.9	89.1	176	174	154	166	143	162
Iron (Fe)	20	ug	1480	2700	2920	855	303	1230	1090	1490	1560	963	1220	1480
Lead (Pb)	3.0	ug	<3.0	<3.0	7.2	<3.0	<3.0	<3.0	<3.0	<3.0	<3.0	<3.0	<3.0	<3.0
Manganese (Mn)	1.0	ug	44.0	59.9	92.3	22.3	9.9	57.2	37.7	42.4	45.9	29.8	37.7	57.6
Nickel (Ni)	3.0	ug	<3.0	3.5	3.6	<3.0	<3.0	<3.0	<3.0	<3.0	<3.0	<3.0	<3.0	<3.0
Selenium (Se)	10	ug	<10	<10	<10	<10	<10	<10	<10	<10	<10	<10	<10	<10
Vanadium (V)	5.0	ug	<5.0	<5.0	5.5	<5.0	<5.0	<5.0	<5.0	<5.0	<5.0	<5.0	<5.0	<5.0
Zinc (Zn)	5.0	ug	21.7	17.8	72.5	12.6	8.7	22.7	17.0	18.5	16.5	30.4	33.3	20.3
Particulates (Dustfall)														
Fixed Dustfall	0.10	mg/dm2.day												
Volatile Dustfall	0.10	mg/dm2.day												
Total Dustfall	0.10	mg/dm2.day												
Fixed Insoluble Dustfall	0.10	mg/dm2.day												
Volatile Insoluble Dustfall	0.10	mg/dm2.day												
Total Insoluble Dustfall	0.10	mg/dm2.day												
Fixed Soluble Dustfall	0.10	mg/dm2.day												
Volatile Soluble Dustfall	0.10	mg/dm2.day												
Total Soluble Dustfall	0.10	mg/dm2.day												

Results Summary L2612385

Job Reference NEW GOLD RRP
Report To Sarah Flesher, New Gold Inc. Rainy River Proje
Date Received 12-Jul-2021 10:00
Report Date 9-Aug-2021 14:35
Report Version 1

Client Sample ID			NORTHWEST-TSP-366	NORTHWEST-TSP-367	NORTHWEST-TSP-368	NORTHWEST-TSP-369	NORTHWEST-TSP-370	NORTHWEST-TSP-371	TSP-TRAVEL BLANK	SOUTH-PM2.5-366	SOUTH-PM2.5-367	SOUTH-PM2.5-368
Date Sampled			3-Jun-2021	9-Jun-2021	15-Jun-2021	21-Jun-2021	27-Jun-2021	3-Jul-2021	7-Jul-2021	3-Jun-2021	9-Jun-2021	15-Jun-2021
Time Sampled			0:00	0:00	0:00	0:00	0:00	0:00	0:00	0:00	0:00	0:00
ALS Sample ID			L2612385-13	L2612385-14	L2612385-15	L2612385-16	L2612385-17	L2612385-18	L2612385-19	L2612385-20	L2612385-21	L2612385-22
Parameter	Lowest Detection Limit	Units	Filter	Filter	Filter	Filter	Filter	Filter	Filter	Filter	Filter	Filter
Particulates (Filter)												
Total particulate	15	ug	38100	81700	63300	30900	24500	61500	3900	146	139	130
Total Metals (Filter)												
Arsenic (As)	3.0	ug	<3.0	<3.0	<3.0	<3.0	<3.0	<3.0	<3.0			
Cadmium (Cd)	2.0	ug	<2.0	<2.0	<2.0	<2.0	<2.0	<2.0	<2.0			
Chromium (Cr)	5.0	ug	<5.0	<5.0	<5.0	<5.0	<5.0	<5.0	<5.0			
Cobalt (Co)	2.0	ug	<2.0	<2.0	<2.0	<2.0	<2.0	<2.0	<2.0			
Copper (Cu)	4.0	ug	274	190	183	180	224	183	<4.0			
Iron (Fe)	20	ug	590	1670	1130	312	137	756	<20			
Lead (Pb)	3.0	ug	<3.0	3.3	<3.0	<3.0	<3.0	<3.0	<3.0			
Manganese (Mn)	1.0	ug	23.8	50.9	31.0	7.6	6.7	43.3	<1.0			
Nickel (Ni)	3.0	ug	<3.0	<3.0	<3.0	<3.0	<3.0	<3.0	<3.0			
Selenium (Se)	10	ug	<10	<10	<10	<10	<10	<10	<10			
Vanadium (V)	5.0	ug	<5.0	<5.0	<5.0	<5.0	<5.0	<5.0	<5.0			
Zinc (Zn)	5.0	ug	10.4	33.8	17.6	<5.0	8.6	14.1	<5.0			
Particulates (Dustfall)												
Fixed Dustfall	0.10	mg/dm2.day										
Volatile Dustfall	0.10	mg/dm2.day										
Total Dustfall	0.10	mg/dm2.day										
Fixed Insoluble Dustfall	0.10	mg/dm2.day										
Volatile Insoluble Dustfall	0.10	mg/dm2.day										
Total Insoluble Dustfall	0.10	mg/dm2.day										
Fixed Soluble Dustfall	0.10	mg/dm2.day										
Volatile Soluble Dustfall	0.10	mg/dm2.day										
Total Soluble Dustfall	0.10	mg/dm2.day										

Results Summary L2612385

Job Reference NEW GOLD RRP
Report To Sarah Flesher, New Gold Inc. Rainy River Proje
Date Received 12-Jul-2021 10:00
Report Date 9-Aug-2021 14:35
Report Version 1

Client Sample ID			SOUTH-PM2.5-369	SOUTH-PM2.5-370	SOUTH-PM2.5-371	NORTH-PM2.5-366	NORTH-PM2.5-367	NORTH-PM2.5-368	NORTH-PM2.5-369	NORTH-PM2.5-370	NORTH-PM2.5-371	NORTHWEST-PM2.5-366	NORTHWEST-PM2.5-367	NORTHWEST-PM2.5-368	NORTHWEST-PM2.5-369	NORTHWEST-PM2.5-370	NORTHWEST-PM2.5-371	PM2.5-TRAVEL BLANK
Date Sampled			21-Jun-2021	27-Jun-2021	3-Jul-2021	3-Jun-2021	9-Jun-2021	15-Jun-2021	21-Jun-2021	27-Jun-2021	3-Jul-2021	3-Jun-2021	9-Jun-2021	15-Jun-2021	21-Jun-2021	27-Jun-2021	3-Jul-2021	7-Jul-2021
Time Sampled			0:00	0:00	0:00	0:00	0:00	0:00	0:00	0:00	0:00	0:00	0:00	0:00	0:00	0:00	0:00	0:00
ALS Sample ID			L2612385-23	L2612385-24	L2612385-25	L2612385-26	L2612385-27	L2612385-28	L2612385-29	L2612385-30	L2612385-31	L2612385-32	L2612385-33	L2612385-34	L2612385-35	L2612385-36	L2612385-37	L2612385-38
Parameter	Lowest Detection Limit	Units	Filter	Filter	Filter	Filter	Filter	Filter	Filter	Filter	Filter	Filter	Filter	Filter	Filter	Filter	Filter	Filter
Particulates (Filter)																		
Total particulate	15	ug	20	136	330	87	127	<15	<15	94	315	118	162	<15	<15	80	272	19
Total Metals (Filter)																		
Arsenic (As)	3.0	ug																
Cadmium (Cd)	2.0	ug																
Chromium (Cr)	5.0	ug																
Cobalt (Co)	2.0	ug																
Copper (Cu)	4.0	ug																
Iron (Fe)	20	ug																
Lead (Pb)	3.0	ug																
Manganese (Mn)	1.0	ug																
Nickel (Ni)	3.0	ug																
Selenium (Se)	10	ug																
Vanadium (V)	5.0	ug																
Zinc (Zn)	5.0	ug																
Particulates (Dustfall)																		
Fixed Dustfall	0.10	mg/dm2.day																
Volatile Dustfall	0.10	mg/dm2.day																
Total Dustfall	0.10	mg/dm2.day																
Fixed Insoluble Dustfall	0.10	mg/dm2.day																
Volatile Insoluble Dustfall	0.10	mg/dm2.day																
Total Insoluble Dustfall	0.10	mg/dm2.day																
Fixed Soluble Dustfall	0.10	mg/dm2.day																
Volatile Soluble Dustfall	0.10	mg/dm2.day																
Total Soluble Dustfall	0.10	mg/dm2.day																

Results Summary L2612385

Job Reference NEW GOLD RRP
Report To Sarah Flesher, New Gold Inc. Rainy River Proje
Date Received 12-Jul-2021 10:00
Report Date 9-Aug-2021 14:35
Report Version 1

Client Sample ID			NOP1-DUSTFALL-6	CP1-DUSTFALL-6	WCP1-DUSTFALL-6	GH1-DUSTFALL-6	SPP1-DUSTFALL-25	SPP1-DUSTFALL-26	SPP1-DUSTFALL-27	SPP1-DUSTFALL-28	DUSTFALL-GALLINGER ROAD	DUSTFALL-TAIT ROAD (SOUTH)	DUSTFALL-NORTHWEST
Date Sampled			30-Jun-2021	2-Jul-2021	2-Jul-2021	2-Jul-2021	9-Jun-2021	16-Jun-2021	23-Jun-2021	30-Jun-2021	30-Jun-2021	30-Jun-2021	30-Jun-2021
Time Sampled			0:00	0:00	0:00	0:00	0:00	0:00	0:00	0:00	0:00	0:00	0:00
ALS Sample ID			L2612385-39	L2612385-40	L2612385-41	L2612385-42	L2612385-43	L2612385-44	L2612385-45	L2612385-46	L2612385-47	L2612385-48	L2612385-49
Parameter	Lowest Detection Limit	Units	Dustfall	Dustfall	Dustfall	Dustfall	Dustfall	Dustfall	Dustfall	Dustfall	Dustfall	Dustfall	Dustfall
Particulates (Filter)													
Total particulate	15	ug											
Total Metals (Filter)													
Arsenic (As)	3.0	ug											
Cadmium (Cd)	2.0	ug											
Chromium (Cr)	5.0	ug											
Cobalt (Co)	2.0	ug											
Copper (Cu)	4.0	ug											
Iron (Fe)	20	ug											
Lead (Pb)	3.0	ug											
Manganese (Mn)	1.0	ug											
Nickel (Ni)	3.0	ug											
Selenium (Se)	10	ug											
Vanadium (V)	5.0	ug											
Zinc (Zn)	5.0	ug											
Particulates (Dustfall)													
Fixed Dustfall	0.10	mg/dm2.day	17.8	5.49	6.07	2.77	4.87	17.7	18.8	37.4	1.48	1.10	0.33
Volatile Dustfall	0.10	mg/dm2.day	5.41	19.1	31.7	5.93	8.17	40.4	38.1	93.4	0.67	4.22	3.46
Total Dustfall	0.10	mg/dm2.day	23.2	24.6	37.8	8.70	13.0	58.1	56.9	131	2.16	5.32	3.80
Fixed Insoluble Dustfall	0.10	mg/dm2.day	16.1	0.15	1.74	1.72	3.40	10.7	9.59	15.6	1.32	0.59	0.21
Volatile Insoluble Dustfall	0.10	mg/dm2.day	0.47	1.34	12.0	1.56	3.00	22.7	10.9	56.5	0.21	2.26	0.47
Total Insoluble Dustfall	0.10	mg/dm2.day	16.6	1.49	13.7	3.27	6.41	33.4	20.5	72.1	1.52	2.84	0.68
Fixed Soluble Dustfall	0.10	mg/dm2.day	1.65	5.33	4.34	1.06	1.47	6.95	9.20	21.7	0.17	0.51	0.12
Volatile Soluble Dustfall	0.10	mg/dm2.day	4.94	17.8	19.7	4.37	5.17	17.7	27.2	36.9	0.47	1.97	3.00
Total Soluble Dustfall	0.10	mg/dm2.day	6.59	23.1	24.1	5.43	6.63	24.7	36.4	58.6	0.63	2.48	3.12

Results Summary L2612385

Job Reference	NEW GOLD RRP
Report To	Sarah Flesher, New Gold Inc. Rainy River Project
Date Received	12-Jul-2021 10:00
Report Date	9-Aug-2021 14:35
Report Version	1

Client Sample ID			SOUTH-TSP-366	SOUTH-TSP-367	SOUTH-TSP-368	SOUTH-TSP-369	SOUTH-TSP-370	SOUTH-TSP-371	NORTH-TSP-366	NORTH-TSP-367	NORTH-TSP-368	NORTH-TSP-369	NORTH-TSP-370	NORTH-TSP-371
Date Sampled			3-Jun-2021	9-Jun-2021	15-Jun-2021	21-Jun-2021	27-Jun-2021	3-Jul-2021	3-Jun-2021	9-Jun-2021	15-Jun-2021	21-Jun-2021	27-Jun-2021	3-Jul-2021
Time Sampled			0:00	0:00	0:00	0:00	0:00	0:00	0:00	0:00	0:00	0:00	0:00	0:00
ALS Sample ID			L2612385-1	L2612385-2	L2612385-3	L2612385-4	L2612385-5	L2612385-6	L2612385-7	L2612385-8	L2612385-9	L2612385-10	L2612385-11	L2612385-12
Parameter	Lowest Detection Limit	Units	Filter	Filter	Filter	Filter	Filter	Filter	Filter	Filter	Filter	Filter	Filter	Filter
Metals (Dustfall)														
Aluminum (Al)-Total	0.000039	mg/dm2.day												
Antimony (Sb)-Total	0.0000013	mg/dm2.day												
Arsenic (As)-Total	0.0000013	mg/dm2.day												
Barium (Ba)-Total	0.00000065	mg/dm2.day												
Beryllium (Be)-Total	0.0000065	mg/dm2.day												
Bismuth (Bi)-Total	0.0000065	mg/dm2.day												
Boron (B)-Total	0.00013	mg/dm2.day												
Cadmium (Cd)-Total	0.00000065	mg/dm2.day												
Calcium (Ca)-Total	0.00026	mg/dm2.day												
Chromium (Cr)-Total	0.0000065	mg/dm2.day												
Cobalt (Co)-Total	0.0000013	mg/dm2.day												
Copper (Cu)-Total	0.0000065	mg/dm2.day												
Iron (Fe)-Total	0.00039	mg/dm2.day												
Lead (Pb)-Total	0.00000065	mg/dm2.day												
Lithium (Li)-Total	0.000065	mg/dm2.day												
Magnesium (Mg)-Total	0.000065	mg/dm2.day												
Manganese (Mn)-Total	0.0000013	mg/dm2.day												
Molybdenum (Mo)-Total	0.00000065	mg/dm2.day												
Nickel (Ni)-Total	0.0000065	mg/dm2.day												
Phosphorus (P)-Total	0.00065	mg/dm2.day												
Potassium (K)-Total	0.00065	mg/dm2.day												
Selenium (Se)-Total	0.000013	mg/dm2.day												
Silicon (Si)-Total	0.00065	mg/dm2.day												
Silver (Ag)-Total	0.00000013	mg/dm2.day												
Sodium (Na)-Total	0.00065	mg/dm2.day												
Strontium (Sr)-Total	0.0000013	mg/dm2.day												
Thallium (Tl)-Total	0.0000013	mg/dm2.day												
Tin (Sn)-Total	0.0000013	mg/dm2.day												
Titanium (Ti)-Total	0.00016	mg/dm2.day												
Uranium (U)-Total	0.00000013	mg/dm2.day												
Vanadium (V)-Total	0.000013	mg/dm2.day												
Zinc (Zn)-Total	0.000039	mg/dm2.day												

Qualifier Legend

DLM	Detection Limit Adjusted due to sample matrix effects (e.g. chemical interference, colour, turbidity).
DLB	Detection Limit Raised. Analyte detected at comparable level in Method Blank.

Results Summary L2612385

Job Reference NEW GOLD RRP
Report To Sarah Flesher, New Gold Inc. Rainy River Proje
Date Received 12-Jul-2021 10:00
Report Date 9-Aug-2021 14:35
Report Version 1

Client Sample ID			NORTHWEST-TSP-366	NORTHWEST-TSP-367	NORTHWEST-TSP-368	NORTHWEST-TSP-369	NORTHWEST-TSP-370	NORTHWEST-TSP-371	TSP-TRAVEL BLANK	SOUTH-PM2.5-366	SOUTH-PM2.5-367	SOUTH-PM2.5-368
Date Sampled			3-Jun-2021	9-Jun-2021	15-Jun-2021	21-Jun-2021	27-Jun-2021	3-Jul-2021	7-Jul-2021	3-Jun-2021	9-Jun-2021	15-Jun-2021
Time Sampled			0:00	0:00	0:00	0:00	0:00	0:00	0:00	0:00	0:00	0:00
ALS Sample ID			L2612385-13	L2612385-14	L2612385-15	L2612385-16	L2612385-17	L2612385-18	L2612385-19	L2612385-20	L2612385-21	L2612385-22
Parameter	Lowest Detection Limit	Units	Filter	Filter	Filter	Filter	Filter	Filter	Filter	Filter	Filter	Filter
Metals (Dustfall)												
Aluminum (Al)-Total	0.000039	mg/dm2.day										
Antimony (Sb)-Total	0.0000013	mg/dm2.day										
Arsenic (As)-Total	0.0000013	mg/dm2.day										
Barium (Ba)-Total	0.00000065	mg/dm2.day										
Beryllium (Be)-Total	0.0000065	mg/dm2.day										
Bismuth (Bi)-Total	0.0000065	mg/dm2.day										
Boron (B)-Total	0.00013	mg/dm2.day										
Cadmium (Cd)-Total	0.00000065	mg/dm2.day										
Calcium (Ca)-Total	0.00026	mg/dm2.day										
Chromium (Cr)-Total	0.0000065	mg/dm2.day										
Cobalt (Co)-Total	0.0000013	mg/dm2.day										
Copper (Cu)-Total	0.0000065	mg/dm2.day										
Iron (Fe)-Total	0.00039	mg/dm2.day										
Lead (Pb)-Total	0.00000065	mg/dm2.day										
Lithium (Li)-Total	0.000065	mg/dm2.day										
Magnesium (Mg)-Total	0.000065	mg/dm2.day										
Manganese (Mn)-Total	0.0000013	mg/dm2.day										
Molybdenum (Mo)-Total	0.00000065	mg/dm2.day										
Nickel (Ni)-Total	0.0000065	mg/dm2.day										
Phosphorus (P)-Total	0.00065	mg/dm2.day										
Potassium (K)-Total	0.00065	mg/dm2.day										
Selenium (Se)-Total	0.000013	mg/dm2.day										
Silicon (Si)-Total	0.00065	mg/dm2.day										
Silver (Ag)-Total	0.00000013	mg/dm2.day										
Sodium (Na)-Total	0.00065	mg/dm2.day										
Strontium (Sr)-Total	0.0000013	mg/dm2.day										
Thallium (Tl)-Total	0.0000013	mg/dm2.day										
Tin (Sn)-Total	0.0000013	mg/dm2.day										
Titanium (Ti)-Total	0.00016	mg/dm2.day										
Uranium (U)-Total	0.00000013	mg/dm2.day										
Vanadium (V)-Total	0.000013	mg/dm2.day										
Zinc (Zn)-Total	0.000039	mg/dm2.day										

Qualifier Legend

DLM	Detection Limit Adjusted due to sample matrix e
DLB	Detection Limit Raised. Analyte detected at cor

Results Summary L2612385

Job Reference NEW GOLD RRP
Report To Sarah Flesher, New Gold Inc. Rainy River Proje
Date Received 12-Jul-2021 10:00
Report Date 9-Aug-2021 14:35
Report Version 1

Client Sample ID			SOUTH-PM2.5-369	SOUTH-PM2.5-370	SOUTH-PM2.5-371	NORTH-PM2.5-366	NORTH-PM2.5-367	NORTH-PM2.5-368	NORTH-PM2.5-369	NORTH-PM2.5-370	NORTH-PM2.5-371	NORTHWEST-PM2.5-366	NORTHWEST-PM2.5-367	NORTHWEST-PM2.5-368	NORTHWEST-PM2.5-369	NORTHWEST-PM2.5-370	NORTHWEST-PM2.5-371	PM2.5-TRAVEL BLANK
Date Sampled			21-Jun-2021	27-Jun-2021	3-Jul-2021	3-Jun-2021	9-Jun-2021	15-Jun-2021	21-Jun-2021	27-Jun-2021	3-Jul-2021	3-Jun-2021	9-Jun-2021	15-Jun-2021	21-Jun-2021	27-Jun-2021	3-Jul-2021	7-Jul-2021
Time Sampled			0:00	0:00	0:00	0:00	0:00	0:00	0:00	0:00	0:00	0:00	0:00	0:00	0:00	0:00	0:00	0:00
ALS Sample ID			L2612385-23	L2612385-24	L2612385-25	L2612385-26	L2612385-27	L2612385-28	L2612385-29	L2612385-30	L2612385-31	L2612385-32	L2612385-33	L2612385-34	L2612385-35	L2612385-36	L2612385-37	L2612385-38
Parameter	Lowest Detection Limit	Units	Filter	Filter	Filter	Filter	Filter	Filter	Filter	Filter	Filter	Filter	Filter	Filter	Filter	Filter	Filter	Filter
Metals (Dustfall)																		
Aluminum (Al)-Total	0.000039	mg/dm2.day																
Antimony (Sb)-Total	0.0000013	mg/dm2.day																
Arsenic (As)-Total	0.0000013	mg/dm2.day																
Barium (Ba)-Total	0.00000065	mg/dm2.day																
Beryllium (Be)-Total	0.0000065	mg/dm2.day																
Bismuth (Bi)-Total	0.0000065	mg/dm2.day																
Boron (B)-Total	0.00013	mg/dm2.day																
Cadmium (Cd)-Total	0.00000065	mg/dm2.day																
Calcium (Ca)-Total	0.00026	mg/dm2.day																
Chromium (Cr)-Total	0.0000065	mg/dm2.day																
Cobalt (Co)-Total	0.0000013	mg/dm2.day																
Copper (Cu)-Total	0.0000065	mg/dm2.day																
Iron (Fe)-Total	0.00039	mg/dm2.day																
Lead (Pb)-Total	0.00000065	mg/dm2.day																
Lithium (Li)-Total	0.000065	mg/dm2.day																
Magnesium (Mg)-Total	0.000065	mg/dm2.day																
Manganese (Mn)-Total	0.0000013	mg/dm2.day																
Molybdenum (Mo)-Total	0.00000065	mg/dm2.day																
Nickel (Ni)-Total	0.0000065	mg/dm2.day																
Phosphorus (P)-Total	0.00065	mg/dm2.day																
Potassium (K)-Total	0.00065	mg/dm2.day																
Selenium (Se)-Total	0.000013	mg/dm2.day																
Silicon (Si)-Total	0.00065	mg/dm2.day																
Silver (Ag)-Total	0.00000013	mg/dm2.day																
Sodium (Na)-Total	0.00065	mg/dm2.day																
Strontium (Sr)-Total	0.0000013	mg/dm2.day																
Thallium (Tl)-Total	0.0000013	mg/dm2.day																
Tin (Sn)-Total	0.0000013	mg/dm2.day																
Titanium (Ti)-Total	0.00016	mg/dm2.day																
Uranium (U)-Total	0.00000013	mg/dm2.day																
Vanadium (V)-Total	0.000013	mg/dm2.day																
Zinc (Zn)-Total	0.000039	mg/dm2.day																

Qualifier Legend

DLM	Detection Limit Adjusted due to sample matrix e
DLB	Detection Limit Raised. Analyte detected at cor

Results Summary L2612385

Job Reference NEW GOLD RRP
Report To Sarah Flesher, New Gold Inc. Rainy River Proje
Date Received 12-Jul-2021 10:00
Report Date 9-Aug-2021 14:35
Report Version 1

Client Sample ID			NOP1-DUSTFALL-6	CP1-DUSTFALL-6	WCP1-DUSTFALL-6	GH1-DUSTFALL-6	SPP1-DUSTFALL-25	SPP1-DUSTFALL-26	SPP1-DUSTFALL-27	SPP1-DUSTFALL-28	DUSTFALL-GALLINGER ROAD	DUSTFALL-TAIT ROAD (SOUTH)	DUSTFALL-NORTHWEST
Date Sampled			30-Jun-2021	2-Jul-2021	2-Jul-2021	2-Jul-2021	9-Jun-2021	16-Jun-2021	23-Jun-2021	30-Jun-2021	30-Jun-2021	30-Jun-2021	30-Jun-2021
Time Sampled			0:00	0:00	0:00	0:00	0:00	0:00	0:00	0:00	0:00	0:00	0:00
ALS Sample ID			L2612385-39	L2612385-40	L2612385-41	L2612385-42	L2612385-43	L2612385-44	L2612385-45	L2612385-46	L2612385-47	L2612385-48	L2612385-49
Parameter	Lowest Detection Limit	Units	Dustfall	Dustfall	Dustfall	Dustfall	Dustfall	Dustfall	Dustfall	Dustfall	Dustfall	Dustfall	Dustfall
Metals (Dustfall)													
Aluminum (Al)-Total	0.000039	mg/dm2.day	0.0353	0.0216	0.0109	0.0133	0.0149	0.0556	0.0654	0.0955	0.00871	0.00834	0.00198
Antimony (Sb)-Total	0.0000013	mg/dm2.day	0.0000042	0.0000030	0.0000021	0.0000022	0.0000046	0.0000209	0.0000313	0.0000314	0.0000040	0.0000044	0.0000017
Arsenic (As)-Total	0.0000013	mg/dm2.day	0.0000244	0.0000295	0.0000227	0.0000200	0.0000256	0.000157	0.0000873	0.000368	0.0000043	0.0000057	0.0000022
Barium (Ba)-Total	0.00000065	mg/dm2.day	0.000503	0.000726	0.000296	0.000115	0.000244	0.00146	0.000877	0.00196	0.000104	0.0000886	0.0000655
Beryllium (Be)-Total	0.0000065	mg/dm2.day	<0.000011	<0.000011	<0.0000085	<0.0000065	<0.000016	<0.000031	<0.000032	<0.000035	<0.0000078	<0.0000078	<0.0000081
Bismuth (Bi)-Total	0.0000065	mg/dm2.day	<0.000011	<0.000011	<0.0000085	<0.0000065	<0.000016	<0.000031	<0.000032	<0.000035	<0.0000078	<0.0000078	<0.0000081
Boron (B)-Total	0.00013	mg/dm2.day	<0.00022	0.00030	0.00056	0.00015	<0.00032	0.00067	0.00085	0.00391	<0.00016	<0.00016	<0.00016
Cadmium (Cd)-Total	0.00000065	mg/dm2.day	0.0000037	0.0000073	0.00000819	0.00000204	0.0000094	0.0000275	0.0000156	0.0000789	<0.00000078	0.00000441	<0.00000081
Calcium (Ca)-Total	0.00026	mg/dm2.day	0.376	0.504	0.296	0.102	0.139	0.925	1.84	3.18	0.0431	0.0365	0.0367
Chromium (Cr)-Total	0.0000065	mg/dm2.day	0.000066	0.000058	0.0000332	0.0000344	0.000100	0.000176	0.000184	0.000286	0.0000135	0.0000298	<0.0000081
Cobalt (Co)-Total	0.0000013	mg/dm2.day	0.0000258	0.0000235	0.0000209	0.0000101	0.0000124	0.0000248	0.0000332	0.0000866	0.0000049	0.0000088	<0.0000016
Copper (Cu)-Total	0.0000065	mg/dm2.day	0.000153	0.00146	0.00155	0.000167	0.000442	0.00337	0.00141	0.00717	<0.000047	0.000249	0.000192
Iron (Fe)-Total	0.00039	mg/dm2.day	0.0359	0.0284	0.0176	0.0150	0.0166	0.0599	0.0623	0.175	0.00900	0.0108	0.00272
Lead (Pb)-Total	0.00000065	mg/dm2.day	0.000125	0.0000457	0.0000460	0.0000161	0.000137	0.00126	0.00116	0.00220	0.0000235	0.0000152	0.00000538
Lithium (Li)-Total	0.000065	mg/dm2.day	<0.00011	<0.00011	<0.000085	<0.000065	<0.00016	<0.00031	<0.00032	0.00043	<0.000078	<0.000078	<0.000081
Magnesium (Mg)-Total	0.000065	mg/dm2.day	0.108	0.143	0.121	0.0381	0.0345	0.329	0.212	0.576	0.0110	0.0189	0.0188
Manganese (Mn)-Total	0.0000013	mg/dm2.day	0.00375	0.00186	0.00392	0.00130	0.00191	0.00862	0.00523	0.0136	0.000671	0.000940	0.000396
Molybdenum (Mo)-Total	0.00000065	mg/dm2.day	0.0000034	0.000110	0.000114	0.0000201	0.0000287	0.000316	0.000133	0.000431	0.00000107	0.0000148	0.00000204
Nickel (Ni)-Total	0.0000065	mg/dm2.day	0.000064	0.000083	0.000220	0.0000459	0.000061	0.000211	0.000217	0.00139	0.0000180	0.0000504	0.0000088
Phosphorus (P)-Total	0.00065	mg/dm2.day	0.0028	0.658	0.974	0.124	0.143	1.37	2.71	5.87	0.00271	0.110	0.0743
Potassium (K)-Total	0.00065	mg/dm2.day	0.0256	1.38	1.51	0.214	0.294	2.48	1.40	6.56	0.0109	0.153	0.0501
Selenium (Se)-Total	0.000013	mg/dm2.day	<0.000022	0.000066	0.000054	<0.000013	<0.000032	0.000093	0.000142	0.000387	<0.000016	0.000017	<0.000016
Silicon (Si)-Total	0.00065	mg/dm2.day	0.0584	0.0418	0.0210	0.0198	0.0229	0.175	0.139	0.206	0.0125	0.0124	0.00402
Silver (Ag)-Total	0.00000013	mg/dm2.day	0.00000201	0.00000219	0.00000273	0.00000056	0.00000226	0.0000293	0.0000210	0.0000289	0.00000025	0.00000030	<0.00000016
Sodium (Na)-Total	0.00065	mg/dm2.day	0.0116	0.329	0.0792	0.0106	0.0242	0.0782	0.187	1.77	0.00359	0.0111	0.00701
Strontium (Sr)-Total	0.0000013	mg/dm2.day	0.000622	0.000758	0.000508	0.000249	0.000238	0.00123	0.00143	0.00433	0.0000897	0.0000944	0.0000942
Thallium (Tl)-Total	0.0000013	mg/dm2.day	<0.0000022	<0.0000023	<0.0000017	<0.0000013	<0.0000032	<0.0000062	<0.0000064	<0.0000070	<0.0000016	<0.0000016	<0.0000016
Tin (Sn)-Total	0.0000013	mg/dm2.day	<0.0000022	<0.0000023	<0.0000017	<0.0000013	<0.0000032	<0.0000062	<0.0000064	<0.0000070	<0.0000016	<0.0000016	<0.0000016
Titanium (Ti)-Total	0.00016	mg/dm2.day	0.00116	0.00051	0.00020	<0.00039	<0.00032	0.00075	0.00085	0.00118	0.00026	0.00017	<0.00016
Uranium (U)-Total	0.00000013	mg/dm2.day	0.00000128	0.00000153	0.00000105	0.00000075	0.00000106	0.00000247	0.00000198	0.00000725	0.00000034	0.00000039	0.00000019
Vanadium (V)-Total	0.000013	mg/dm2.day	0.000071	0.000052	0.000028	0.000031	0.000035	0.000084	0.000082	0.000183	0.000019	0.000019	<0.000016
Zinc (Zn)-Total	0.000039	mg/dm2.day	0.000819	0.00580	0.00859	0.000983	0.00292	0.0212	0.00952	0.0540	0.000198	0.00148	0.000957

Qualifier Legend

DLM Detection Limit Adjusted due to sample matrix e
DLB Detection Limit Raised. Analyte detected at cor

Results of Analysis L2612385

Job Reference NEW GOLD RRP
Report To Sarah Flesher, New Gold Inc. Rainy River Project
Date Received 12-Jul-2021 10:00
Report Date 9-Aug-2021 14:35
Report Version 1

Parameter	ALS ID	Client Sample ID	ALS Test Code	Results	Detection Limit	Units	Qual	Date Sampled	Time Sampled	Prep Date	Analysis Date	QC Lot	QC Eval	Hold Time Eval	Matrix	Class
Particulates (Filter)																
Total particulate	L2612385-1	SOUTH-TSP-366	PART-HIVOL-GRAV-BU	65700	2300	ug		03-Jun-21	00:00		16-Jul-21	1506121	✓	✓	Filter	Particulates
Total Metals (Filter)																
Arsenic (As)	L2612385-1	SOUTH-TSP-366	MET-IO3.5-MS-BU	<3.0	3.0	ug		03-Jun-21	00:00	19-Jul-21	21-Jul-21	1508243	✓	✓	Filter	Total Metals
Cadmium (Cd)	L2612385-1	SOUTH-TSP-366	MET-IO3.5-MS-BU	<2.0	2.0	ug		03-Jun-21	00:00	19-Jul-21	21-Jul-21	1508243	✓	✓	Filter	Total Metals
Chromium (Cr)	L2612385-1	SOUTH-TSP-366	MET-IO3.5-MS-BU	<5.0	5.0	ug		03-Jun-21	00:00	19-Jul-21	21-Jul-21	1508243	✓	✓	Filter	Total Metals
Cobalt (Co)	L2612385-1	SOUTH-TSP-366	MET-IO3.5-MS-BU	<2.0	2.0	ug		03-Jun-21	00:00	19-Jul-21	21-Jul-21	1508243	✓	✓	Filter	Total Metals
Copper (Cu)	L2612385-1	SOUTH-TSP-366	MET-IO3.5-MS-BU	132	4.0	ug		03-Jun-21	00:00	19-Jul-21	21-Jul-21	1508243	✓	✓	Filter	Total Metals
Iron (Fe)	L2612385-1	SOUTH-TSP-366	MET-IO3.5-MS-BU	1480	20	ug		03-Jun-21	00:00	19-Jul-21	21-Jul-21	1508243	✓	✓	Filter	Total Metals
Lead (Pb)	L2612385-1	SOUTH-TSP-366	MET-IO3.5-MS-BU	<3.0	3.0	ug		03-Jun-21	00:00	19-Jul-21	21-Jul-21	1508243	✓	✓	Filter	Total Metals
Manganese (Mn)	L2612385-1	SOUTH-TSP-366	MET-IO3.5-MS-BU	44.0	1.0	ug		03-Jun-21	00:00	19-Jul-21	21-Jul-21	1508243	✓	✓	Filter	Total Metals
Nickel (Ni)	L2612385-1	SOUTH-TSP-366	MET-IO3.5-MS-BU	<3.0	3.0	ug		03-Jun-21	00:00	19-Jul-21	21-Jul-21	1508243	✓	✓	Filter	Total Metals
Selenium (Se)	L2612385-1	SOUTH-TSP-366	MET-IO3.5-MS-BU	<10	10	ug		03-Jun-21	00:00	19-Jul-21	21-Jul-21	1508243	✓	✓	Filter	Total Metals
Vanadium (V)	L2612385-1	SOUTH-TSP-366	MET-IO3.5-MS-BU	<5.0	5.0	ug		03-Jun-21	00:00	19-Jul-21	21-Jul-21	1508243	✓	✓	Filter	Total Metals
Zinc (Zn)	L2612385-1	SOUTH-TSP-366	MET-IO3.5-MS-BU	21.7	5.0	ug		03-Jun-21	00:00	19-Jul-21	21-Jul-21	1508243	✓	✓	Filter	Total Metals
Particulates (Filter)																
Total particulate	L2612385-2	SOUTH-TSP-367	PART-HIVOL-GRAV-BU	109000	2300	ug		09-Jun-21	00:00		16-Jul-21	1506121	✓	✓	Filter	Particulates
Total Metals (Filter)																
Arsenic (As)	L2612385-2	SOUTH-TSP-367	MET-IO3.5-MS-BU	<3.0	3.0	ug		09-Jun-21	00:00	19-Jul-21	21-Jul-21	1508243	✓	✓	Filter	Total Metals
Cadmium (Cd)	L2612385-2	SOUTH-TSP-367	MET-IO3.5-MS-BU	<2.0	2.0	ug		09-Jun-21	00:00	19-Jul-21	21-Jul-21	1508243	✓	✓	Filter	Total Metals
Chromium (Cr)	L2612385-2	SOUTH-TSP-367	MET-IO3.5-MS-BU	<5.0	5.0	ug		09-Jun-21	00:00	19-Jul-21	21-Jul-21	1508243	✓	✓	Filter	Total Metals
Cobalt (Co)	L2612385-2	SOUTH-TSP-367	MET-IO3.5-MS-BU	<2.0	2.0	ug		09-Jun-21	00:00	19-Jul-21	21-Jul-21	1508243	✓	✓	Filter	Total Metals
Copper (Cu)	L2612385-2	SOUTH-TSP-367	MET-IO3.5-MS-BU	93.2	4.0	ug		09-Jun-21	00:00	19-Jul-21	21-Jul-21	1508243	✓	✓	Filter	Total Metals
Iron (Fe)	L2612385-2	SOUTH-TSP-367	MET-IO3.5-MS-BU	2700	20	ug		09-Jun-21	00:00	19-Jul-21	21-Jul-21	1508243	✓	✓	Filter	Total Metals
Lead (Pb)	L2612385-2	SOUTH-TSP-367	MET-IO3.5-MS-BU	<3.0	3.0	ug		09-Jun-21	00:00	19-Jul-21	21-Jul-21	1508243	✓	✓	Filter	Total Metals
Manganese (Mn)	L2612385-2	SOUTH-TSP-367	MET-IO3.5-MS-BU	59.9	1.0	ug		09-Jun-21	00:00	19-Jul-21	21-Jul-21	1508243	✓	✓	Filter	Total Metals
Nickel (Ni)	L2612385-2	SOUTH-TSP-367	MET-IO3.5-MS-BU	3.5	3.0	ug		09-Jun-21	00:00	19-Jul-21	21-Jul-21	1508243	✓	✓	Filter	Total Metals
Selenium (Se)	L2612385-2	SOUTH-TSP-367	MET-IO3.5-MS-BU	<10	10	ug		09-Jun-21	00:00	19-Jul-21	21-Jul-21	1508243	✓	✓	Filter	Total Metals
Vanadium (V)	L2612385-2	SOUTH-TSP-367	MET-IO3.5-MS-BU	<5.0	5.0	ug		09-Jun-21	00:00	19-Jul-21	21-Jul-21	1508243	✓	✓	Filter	Total Metals
Zinc (Zn)	L2612385-2	SOUTH-TSP-367	MET-IO3.5-MS-BU	17.8	5.0	ug		09-Jun-21	00:00	19-Jul-21	21-Jul-21	1508243	✓	✓	Filter	Total Metals
Particulates (Filter)																
Total particulate	L2612385-3	SOUTH-TSP-368	PART-HIVOL-GRAV-BU	120000	2300	ug		15-Jun-21	00:00		16-Jul-21	1506121	✓	✓	Filter	Particulates
Total Metals (Filter)																
Arsenic (As)	L2612385-3	SOUTH-TSP-368	MET-IO3.5-MS-BU	<3.0	3.0	ug		15-Jun-21	00:00	19-Jul-21	21-Jul-21	1508243	✓	✓	Filter	Total Metals
Cadmium (Cd)	L2612385-3	SOUTH-TSP-368	MET-IO3.5-MS-BU	<2.0	2.0	ug		15-Jun-21	00:00	19-Jul-21	21-Jul-21	1508243	✓	✓	Filter	Total Metals
Chromium (Cr)	L2612385-3	SOUTH-TSP-368	MET-IO3.5-MS-BU	5.8	5.0	ug		15-Jun-21	00:00	19-Jul-21	21-Jul-21	1508243	✓	✓	Filter	Total Metals
Cobalt (Co)	L2612385-3	SOUTH-TSP-368	MET-IO3.5-MS-BU	<2.0	2.0	ug		15-Jun-21	00:00	19-Jul-21	21-Jul-21	1508243	✓	✓	Filter	Total Metals
Copper (Cu)	L2612385-3	SOUTH-TSP-368	MET-IO3.5-MS-BU	135	4.0	ug		15-Jun-21	00:00	19-Jul-21	21-Jul-21	1508243	✓	✓	Filter	Total Metals
Iron (Fe)	L2612385-3	SOUTH-TSP-368	MET-IO3.5-MS-BU	2920	20	ug		15-Jun-21	00:00	19-Jul-21	21-Jul-21	1508243	✓	✓	Filter	Total Metals
Lead (Pb)	L2612385-3	SOUTH-TSP-368	MET-IO3.5-MS-BU	7.2	3.0	ug		15-Jun-21	00:00	19-Jul-21	21-Jul-21	1508243	✓	✓	Filter	Total Metals
Manganese (Mn)	L2612385-3	SOUTH-TSP-368	MET-IO3.5-MS-BU	92.3	1.0	ug		15-Jun-21	00:00	19-Jul-21	21-Jul-21	1508243	✓	✓	Filter	Total Metals
Nickel (Ni)	L2612385-3	SOUTH-TSP-368	MET-IO3.5-MS-BU	3.6	3.0	ug		15-Jun-21	00:00	19-Jul-21	21-Jul-21	1508243	✓	✓	Filter	Total Metals
Selenium (Se)	L2612385-3	SOUTH-TSP-368	MET-IO3.5-MS-BU	<10	10	ug		15-Jun-21	00:00	19-Jul-21	21-Jul-21	1508243	✓	✓	Filter	Total Metals
Vanadium (V)	L2612385-3	SOUTH-TSP-368	MET-IO3.5-MS-BU	5.5	5.0	ug		15-Jun-21	00:00	19-Jul-21	21-Jul-21	1508243	✓	✓	Filter	Total Metals
Zinc (Zn)	L2612385-3	SOUTH-TSP-368	MET-IO3.5-MS-BU	72.5	5.0	ug		15-Jun-21	00:00	19-Jul-21	21-Jul-21	1508243	✓	✓	Filter	Total Metals
Particulates (Filter)																
Total particulate	L2612385-4	SOUTH-TSP-369	PART-HIVOL-GRAV-BU	48200	2300	ug		21-Jun-21	00:00		16-Jul-21	1506121	✓	✓	Filter	Particulates
Total Metals (Filter)																
Arsenic (As)	L2612385-4	SOUTH-TSP-369	MET-IO3.5-MS-BU	<3.0	3.0	ug		21-Jun-21	00:00	19-Jul-21	21-Jul-21	1508243	✓	✓	Filter	Total Metals
Cadmium (Cd)	L2612385-4	SOUTH-TSP-369	MET-IO3.5-MS-BU	<2.0	2.0	ug		21-Jun-21	00:00	19-Jul-21	21-Jul-21	1508243	✓	✓	Filter	Total Metals
Chromium (Cr)	L2612385-4	SOUTH-TSP-369	MET-IO3.5-MS-BU	<5.0	5.0	ug		21-Jun-21	00:00	19-Jul-21	21-Jul-21	1508243	✓	✓	Filter	Total Metals
Cobalt (Co)	L2612385-4	SOUTH-TSP-369	MET-IO3.5-MS-BU	<2.0	2.0	ug		21-Jun-21	00:00	19-Jul-21	21-Jul-21	1508243	✓	✓	Filter	Total Metals
Copper (Cu)	L2612385-4	SOUTH-TSP-369	MET-IO3.5-MS-BU	95.0	4.0	ug		21-Jun-21	00:00	19-Jul-21	21-Jul-21	1508243	✓	✓	Filter	Total Metals

Results of Analysis L2612385

Job Reference NEW GOLD RRP
Report To Sarah Flesher, New Gold Inc. Rainy River Project
Date Received 12-Jul-2021 10:00
Report Date 9-Aug-2021 14:35
Report Version 1

Parameter	ALS ID	Client Sample ID	ALS Test Code	Results	Detection Limit	Units	Qual	Date Sampled	Time Sampled	Prep Date	Analysis Date	QC Lot	QC Eval	Hold Time Eval	Matrix	Class
Iron (Fe)	L2612385-4	SOUTH-TSP-369	MET-IO3.5-MS-BU	855	20	ug		21-Jun-21	00:00	19-Jul-21	21-Jul-21	1508243	✓	✓	Filter	Total Metals
Lead (Pb)	L2612385-4	SOUTH-TSP-369	MET-IO3.5-MS-BU	<3.0	3.0	ug		21-Jun-21	00:00	19-Jul-21	21-Jul-21	1508243	✓	✓	Filter	Total Metals
Manganese (Mn)	L2612385-4	SOUTH-TSP-369	MET-IO3.5-MS-BU	22.3	1.0	ug		21-Jun-21	00:00	19-Jul-21	21-Jul-21	1508243	✓	✓	Filter	Total Metals
Nickel (Ni)	L2612385-4	SOUTH-TSP-369	MET-IO3.5-MS-BU	<3.0	3.0	ug		21-Jun-21	00:00	19-Jul-21	21-Jul-21	1508243	✓	✓	Filter	Total Metals
Selenium (Se)	L2612385-4	SOUTH-TSP-369	MET-IO3.5-MS-BU	<10	10	ug		21-Jun-21	00:00	19-Jul-21	21-Jul-21	1508243	✓	✓	Filter	Total Metals
Vanadium (V)	L2612385-4	SOUTH-TSP-369	MET-IO3.5-MS-BU	<5.0	5.0	ug		21-Jun-21	00:00	19-Jul-21	21-Jul-21	1508243	✓	✓	Filter	Total Metals
Zinc (Zn)	L2612385-4	SOUTH-TSP-369	MET-IO3.5-MS-BU	12.6	5.0	ug		21-Jun-21	00:00	19-Jul-21	21-Jul-21	1508243	✓	✓	Filter	Total Metals
Particulates (Filter)																
Total particulate	L2612385-5	SOUTH-TSP-370	PART-HIVOL-GRAV-BU	30900	2300	ug		27-Jun-21	00:00		16-Jul-21	1506121	✓	✓	Filter	Particulates
Total Metals (Filter)																
Arsenic (As)	L2612385-5	SOUTH-TSP-370	MET-IO3.5-MS-BU	<3.0	3.0	ug		27-Jun-21	00:00	19-Jul-21	21-Jul-21	1508243	✓	✓	Filter	Total Metals
Cadmium (Cd)	L2612385-5	SOUTH-TSP-370	MET-IO3.5-MS-BU	<2.0	2.0	ug		27-Jun-21	00:00	19-Jul-21	21-Jul-21	1508243	✓	✓	Filter	Total Metals
Chromium (Cr)	L2612385-5	SOUTH-TSP-370	MET-IO3.5-MS-BU	<5.0	5.0	ug		27-Jun-21	00:00	19-Jul-21	21-Jul-21	1508243	✓	✓	Filter	Total Metals
Cobalt (Co)	L2612385-5	SOUTH-TSP-370	MET-IO3.5-MS-BU	<2.0	2.0	ug		27-Jun-21	00:00	19-Jul-21	21-Jul-21	1508243	✓	✓	Filter	Total Metals
Copper (Cu)	L2612385-5	SOUTH-TSP-370	MET-IO3.5-MS-BU	81.9	4.0	ug		27-Jun-21	00:00	19-Jul-21	21-Jul-21	1508243	✓	✓	Filter	Total Metals
Iron (Fe)	L2612385-5	SOUTH-TSP-370	MET-IO3.5-MS-BU	303	20	ug		27-Jun-21	00:00	19-Jul-21	21-Jul-21	1508243	✓	✓	Filter	Total Metals
Lead (Pb)	L2612385-5	SOUTH-TSP-370	MET-IO3.5-MS-BU	<3.0	3.0	ug		27-Jun-21	00:00	19-Jul-21	21-Jul-21	1508243	✓	✓	Filter	Total Metals
Manganese (Mn)	L2612385-5	SOUTH-TSP-370	MET-IO3.5-MS-BU	9.9	1.0	ug		27-Jun-21	00:00	19-Jul-21	21-Jul-21	1508243	✓	✓	Filter	Total Metals
Nickel (Ni)	L2612385-5	SOUTH-TSP-370	MET-IO3.5-MS-BU	<3.0	3.0	ug		27-Jun-21	00:00	19-Jul-21	21-Jul-21	1508243	✓	✓	Filter	Total Metals
Selenium (Se)	L2612385-5	SOUTH-TSP-370	MET-IO3.5-MS-BU	<10	10	ug		27-Jun-21	00:00	19-Jul-21	21-Jul-21	1508243	✓	✓	Filter	Total Metals
Vanadium (V)	L2612385-5	SOUTH-TSP-370	MET-IO3.5-MS-BU	<5.0	5.0	ug		27-Jun-21	00:00	19-Jul-21	21-Jul-21	1508243	✓	✓	Filter	Total Metals
Zinc (Zn)	L2612385-5	SOUTH-TSP-370	MET-IO3.5-MS-BU	8.7	5.0	ug		27-Jun-21	00:00	19-Jul-21	21-Jul-21	1508243	✓	✓	Filter	Total Metals
Particulates (Filter)																
Total particulate	L2612385-6	SOUTH-TSP-371	PART-HIVOL-GRAV-BU	75300	2300	ug		03-Jul-21	00:00		16-Jul-21	1506121	✓	✓	Filter	Particulates
Total Metals (Filter)																
Arsenic (As)	L2612385-6	SOUTH-TSP-371	MET-IO3.5-MS-BU	<3.0	3.0	ug		03-Jul-21	00:00	19-Jul-21	21-Jul-21	1508243	✓	✓	Filter	Total Metals
Cadmium (Cd)	L2612385-6	SOUTH-TSP-371	MET-IO3.5-MS-BU	<2.0	2.0	ug		03-Jul-21	00:00	19-Jul-21	21-Jul-21	1508243	✓	✓	Filter	Total Metals
Chromium (Cr)	L2612385-6	SOUTH-TSP-371	MET-IO3.5-MS-BU	<5.0	5.0	ug		03-Jul-21	00:00	19-Jul-21	21-Jul-21	1508243	✓	✓	Filter	Total Metals
Cobalt (Co)	L2612385-6	SOUTH-TSP-371	MET-IO3.5-MS-BU	<2.0	2.0	ug		03-Jul-21	00:00	19-Jul-21	21-Jul-21	1508243	✓	✓	Filter	Total Metals
Copper (Cu)	L2612385-6	SOUTH-TSP-371	MET-IO3.5-MS-BU	89.1	4.0	ug		03-Jul-21	00:00	19-Jul-21	21-Jul-21	1508243	✓	✓	Filter	Total Metals
Iron (Fe)	L2612385-6	SOUTH-TSP-371	MET-IO3.5-MS-BU	1230	20	ug		03-Jul-21	00:00	19-Jul-21	21-Jul-21	1508243	✓	✓	Filter	Total Metals
Lead (Pb)	L2612385-6	SOUTH-TSP-371	MET-IO3.5-MS-BU	<3.0	3.0	ug		03-Jul-21	00:00	19-Jul-21	21-Jul-21	1508243	✓	✓	Filter	Total Metals
Manganese (Mn)	L2612385-6	SOUTH-TSP-371	MET-IO3.5-MS-BU	57.2	1.0	ug		03-Jul-21	00:00	19-Jul-21	21-Jul-21	1508243	✓	✓	Filter	Total Metals
Nickel (Ni)	L2612385-6	SOUTH-TSP-371	MET-IO3.5-MS-BU	<3.0	3.0	ug		03-Jul-21	00:00	19-Jul-21	21-Jul-21	1508243	✓	✓	Filter	Total Metals
Selenium (Se)	L2612385-6	SOUTH-TSP-371	MET-IO3.5-MS-BU	<10	10	ug		03-Jul-21	00:00	19-Jul-21	21-Jul-21	1508243	✓	✓	Filter	Total Metals
Vanadium (V)	L2612385-6	SOUTH-TSP-371	MET-IO3.5-MS-BU	<5.0	5.0	ug		03-Jul-21	00:00	19-Jul-21	21-Jul-21	1508243	✓	✓	Filter	Total Metals
Zinc (Zn)	L2612385-6	SOUTH-TSP-371	MET-IO3.5-MS-BU	22.7	5.0	ug		03-Jul-21	00:00	19-Jul-21	21-Jul-21	1508243	✓	✓	Filter	Total Metals
Particulates (Filter)																
Total particulate	L2612385-7	NORTH-TSP-366	PART-HIVOL-GRAV-BU	62500	2300	ug		03-Jun-21	00:00		16-Jul-21	1506121	✓	✓	Filter	Particulates
Total Metals (Filter)																
Arsenic (As)	L2612385-7	NORTH-TSP-366	MET-IO3.5-MS-BU	<3.0	3.0	ug		03-Jun-21	00:00	19-Jul-21	21-Jul-21	1508243	✓	✓	Filter	Total Metals
Cadmium (Cd)	L2612385-7	NORTH-TSP-366	MET-IO3.5-MS-BU	<2.0	2.0	ug		03-Jun-21	00:00	19-Jul-21	21-Jul-21	1508243	✓	✓	Filter	Total Metals
Chromium (Cr)	L2612385-7	NORTH-TSP-366	MET-IO3.5-MS-BU	<5.0	5.0	ug		03-Jun-21	00:00	19-Jul-21	21-Jul-21	1508243	✓	✓	Filter	Total Metals
Cobalt (Co)	L2612385-7	NORTH-TSP-366	MET-IO3.5-MS-BU	<2.0	2.0	ug		03-Jun-21	00:00	19-Jul-21	21-Jul-21	1508243	✓	✓	Filter	Total Metals
Copper (Cu)	L2612385-7	NORTH-TSP-366	MET-IO3.5-MS-BU	176	4.0	ug		03-Jun-21	00:00	19-Jul-21	21-Jul-21	1508243	✓	✓	Filter	Total Metals
Iron (Fe)	L2612385-7	NORTH-TSP-366	MET-IO3.5-MS-BU	1090	20	ug		03-Jun-21	00:00	19-Jul-21	21-Jul-21	1508243	✓	✓	Filter	Total Metals
Lead (Pb)	L2612385-7	NORTH-TSP-366	MET-IO3.5-MS-BU	<3.0	3.0	ug		03-Jun-21	00:00	19-Jul-21	21-Jul-21	1508243	✓	✓	Filter	Total Metals
Manganese (Mn)	L2612385-7	NORTH-TSP-366	MET-IO3.5-MS-BU	37.7	1.0	ug		03-Jun-21	00:00	19-Jul-21	21-Jul-21	1508243	✓	✓	Filter	Total Metals
Nickel (Ni)	L2612385-7	NORTH-TSP-366	MET-IO3.5-MS-BU	<3.0	3.0	ug		03-Jun-21	00:00	19-Jul-21	21-Jul-21	1508243	✓	✓	Filter	Total Metals
Selenium (Se)	L2612385-7	NORTH-TSP-366	MET-IO3.5-MS-BU	<10	10	ug		03-Jun-21	00:00	19-Jul-21	21-Jul-21	1508243	✓	✓	Filter	Total Metals
Vanadium (V)	L2612385-7	NORTH-TSP-366	MET-IO3.5-MS-BU	<5.0	5.0	ug		03-Jun-21	00:00	19-Jul-21	21-Jul-21	1508243	✓	✓	Filter	Total Metals
Zinc (Zn)	L2612385-7	NORTH-TSP-366	MET-IO3.5-MS-BU	17.0	5.0	ug		03-Jun-21	00:00	19-Jul-21	21-Jul-21	1508243	✓	✓	Filter	Total Metals
Particulates (Filter)																
Total particulate	L2612385-8	NORTH-TSP-367	PART-HIVOL-GRAV-BU	83800	2300	ug		09-Jun-21	00:00		16-Jul-21	1506121	✓	✓	Filter	Particulates

Results of Analysis L2612385

Job Reference NEW GOLD RRP
Report To Sarah Flesher, New Gold Inc. Rainy River Project
Date Received 12-Jul-2021 10:00
Report Date 9-Aug-2021 14:35
Report Version 1

Parameter	ALS ID	Client Sample ID	ALS Test Code	Results	Detection Limit	Units	Qual	Date Sampled	Time Sampled	Prep Date	Analysis Date	QC Lot	QC Eval	Hold Time Eval	Matrix	Class
Total Metals (Filter)																
Arsenic (As)	L2612385-8	NORTH-TSP-367	MET-IO3.5-MS-BU	<3.0	3.0	ug		09-Jun-21	00:00	19-Jul-21	21-Jul-21	1508243	✓	✓	Filter	Total Metals
Cadmium (Cd)	L2612385-8	NORTH-TSP-367	MET-IO3.5-MS-BU	<2.0	2.0	ug		09-Jun-21	00:00	19-Jul-21	21-Jul-21	1508243	✓	✓	Filter	Total Metals
Chromium (Cr)	L2612385-8	NORTH-TSP-367	MET-IO3.5-MS-BU	<5.0	5.0	ug		09-Jun-21	00:00	19-Jul-21	21-Jul-21	1508243	✓	✓	Filter	Total Metals
Cobalt (Co)	L2612385-8	NORTH-TSP-367	MET-IO3.5-MS-BU	<2.0	2.0	ug		09-Jun-21	00:00	19-Jul-21	21-Jul-21	1508243	✓	✓	Filter	Total Metals
Copper (Cu)	L2612385-8	NORTH-TSP-367	MET-IO3.5-MS-BU	174	4.0	ug		09-Jun-21	00:00	19-Jul-21	21-Jul-21	1508243	✓	✓	Filter	Total Metals
Iron (Fe)	L2612385-8	NORTH-TSP-367	MET-IO3.5-MS-BU	1490	20	ug		09-Jun-21	00:00	19-Jul-21	21-Jul-21	1508243	✓	✓	Filter	Total Metals
Lead (Pb)	L2612385-8	NORTH-TSP-367	MET-IO3.5-MS-BU	<3.0	3.0	ug		09-Jun-21	00:00	19-Jul-21	21-Jul-21	1508243	✓	✓	Filter	Total Metals
Manganese (Mn)	L2612385-8	NORTH-TSP-367	MET-IO3.5-MS-BU	42.4	1.0	ug		09-Jun-21	00:00	19-Jul-21	21-Jul-21	1508243	✓	✓	Filter	Total Metals
Nickel (Ni)	L2612385-8	NORTH-TSP-367	MET-IO3.5-MS-BU	<3.0	3.0	ug		09-Jun-21	00:00	19-Jul-21	21-Jul-21	1508243	✓	✓	Filter	Total Metals
Selenium (Se)	L2612385-8	NORTH-TSP-367	MET-IO3.5-MS-BU	<10	10	ug		09-Jun-21	00:00	19-Jul-21	21-Jul-21	1508243	✓	✓	Filter	Total Metals
Vanadium (V)	L2612385-8	NORTH-TSP-367	MET-IO3.5-MS-BU	<5.0	5.0	ug		09-Jun-21	00:00	19-Jul-21	21-Jul-21	1508243	✓	✓	Filter	Total Metals
Zinc (Zn)	L2612385-8	NORTH-TSP-367	MET-IO3.5-MS-BU	18.5	5.0	ug		09-Jun-21	00:00	19-Jul-21	21-Jul-21	1508243	✓	✓	Filter	Total Metals
Particulates (Filter)																
Total particulate	L2612385-9	NORTH-TSP-368	PART-HIVOL-GRAV-BU	86600	2300	ug		15-Jun-21	00:00		16-Jul-21	1506121	✓	✓	Filter	Particulates
Total Metals (Filter)																
Arsenic (As)	L2612385-9	NORTH-TSP-368	MET-IO3.5-MS-BU	<3.0	3.0	ug		15-Jun-21	00:00	19-Jul-21	21-Jul-21	1508243	✓	✓	Filter	Total Metals
Cadmium (Cd)	L2612385-9	NORTH-TSP-368	MET-IO3.5-MS-BU	<2.0	2.0	ug		15-Jun-21	00:00	19-Jul-21	21-Jul-21	1508243	✓	✓	Filter	Total Metals
Chromium (Cr)	L2612385-9	NORTH-TSP-368	MET-IO3.5-MS-BU	<5.0	5.0	ug		15-Jun-21	00:00	19-Jul-21	21-Jul-21	1508243	✓	✓	Filter	Total Metals
Cobalt (Co)	L2612385-9	NORTH-TSP-368	MET-IO3.5-MS-BU	<2.0	2.0	ug		15-Jun-21	00:00	19-Jul-21	21-Jul-21	1508243	✓	✓	Filter	Total Metals
Copper (Cu)	L2612385-9	NORTH-TSP-368	MET-IO3.5-MS-BU	154	4.0	ug		15-Jun-21	00:00	19-Jul-21	21-Jul-21	1508243	✓	✓	Filter	Total Metals
Iron (Fe)	L2612385-9	NORTH-TSP-368	MET-IO3.5-MS-BU	1560	20	ug		15-Jun-21	00:00	19-Jul-21	21-Jul-21	1508243	✓	✓	Filter	Total Metals
Lead (Pb)	L2612385-9	NORTH-TSP-368	MET-IO3.5-MS-BU	<3.0	3.0	ug		15-Jun-21	00:00	19-Jul-21	21-Jul-21	1508243	✓	✓	Filter	Total Metals
Manganese (Mn)	L2612385-9	NORTH-TSP-368	MET-IO3.5-MS-BU	45.9	1.0	ug		15-Jun-21	00:00	19-Jul-21	21-Jul-21	1508243	✓	✓	Filter	Total Metals
Nickel (Ni)	L2612385-9	NORTH-TSP-368	MET-IO3.5-MS-BU	<3.0	3.0	ug		15-Jun-21	00:00	19-Jul-21	21-Jul-21	1508243	✓	✓	Filter	Total Metals
Selenium (Se)	L2612385-9	NORTH-TSP-368	MET-IO3.5-MS-BU	<10	10	ug		15-Jun-21	00:00	19-Jul-21	21-Jul-21	1508243	✓	✓	Filter	Total Metals
Vanadium (V)	L2612385-9	NORTH-TSP-368	MET-IO3.5-MS-BU	<5.0	5.0	ug		15-Jun-21	00:00	19-Jul-21	21-Jul-21	1508243	✓	✓	Filter	Total Metals
Zinc (Zn)	L2612385-9	NORTH-TSP-368	MET-IO3.5-MS-BU	16.5	5.0	ug		15-Jun-21	00:00	19-Jul-21	21-Jul-21	1508243	✓	✓	Filter	Total Metals
Particulates (Filter)																
Total particulate	L2612385-10	NORTH-TSP-369	PART-HIVOL-GRAV-BU	56900	2300	ug		21-Jun-21	00:00		16-Jul-21	1506121	✓	✓	Filter	Particulates
Total Metals (Filter)																
Arsenic (As)	L2612385-10	NORTH-TSP-369	MET-IO3.5-MS-BU	<3.0	3.0	ug		21-Jun-21	00:00	19-Jul-21	21-Jul-21	1508243	✓	✓	Filter	Total Metals
Cadmium (Cd)	L2612385-10	NORTH-TSP-369	MET-IO3.5-MS-BU	<2.0	2.0	ug		21-Jun-21	00:00	19-Jul-21	21-Jul-21	1508243	✓	✓	Filter	Total Metals
Chromium (Cr)	L2612385-10	NORTH-TSP-369	MET-IO3.5-MS-BU	<5.0	5.0	ug		21-Jun-21	00:00	19-Jul-21	21-Jul-21	1508243	✓	✓	Filter	Total Metals
Cobalt (Co)	L2612385-10	NORTH-TSP-369	MET-IO3.5-MS-BU	<2.0	2.0	ug		21-Jun-21	00:00	19-Jul-21	21-Jul-21	1508243	✓	✓	Filter	Total Metals
Copper (Cu)	L2612385-10	NORTH-TSP-369	MET-IO3.5-MS-BU	166	4.0	ug		21-Jun-21	00:00	19-Jul-21	21-Jul-21	1508243	✓	✓	Filter	Total Metals
Iron (Fe)	L2612385-10	NORTH-TSP-369	MET-IO3.5-MS-BU	963	20	ug		21-Jun-21	00:00	19-Jul-21	21-Jul-21	1508243	✓	✓	Filter	Total Metals
Lead (Pb)	L2612385-10	NORTH-TSP-369	MET-IO3.5-MS-BU	<3.0	3.0	ug		21-Jun-21	00:00	19-Jul-21	21-Jul-21	1508243	✓	✓	Filter	Total Metals
Manganese (Mn)	L2612385-10	NORTH-TSP-369	MET-IO3.5-MS-BU	29.8	1.0	ug		21-Jun-21	00:00	19-Jul-21	21-Jul-21	1508243	✓	✓	Filter	Total Metals
Nickel (Ni)	L2612385-10	NORTH-TSP-369	MET-IO3.5-MS-BU	<3.0	3.0	ug		21-Jun-21	00:00	19-Jul-21	21-Jul-21	1508243	✓	✓	Filter	Total Metals
Selenium (Se)	L2612385-10	NORTH-TSP-369	MET-IO3.5-MS-BU	<10	10	ug		21-Jun-21	00:00	19-Jul-21	21-Jul-21	1508243	✓	✓	Filter	Total Metals
Vanadium (V)	L2612385-10	NORTH-TSP-369	MET-IO3.5-MS-BU	<5.0	5.0	ug		21-Jun-21	00:00	19-Jul-21	21-Jul-21	1508243	✓	✓	Filter	Total Metals
Zinc (Zn)	L2612385-10	NORTH-TSP-369	MET-IO3.5-MS-BU	30.4	5.0	ug		21-Jun-21	00:00	19-Jul-21	21-Jul-21	1508243	✓	✓	Filter	Total Metals
Particulates (Filter)																
Total particulate	L2612385-11	NORTH-TSP-370	PART-HIVOL-GRAV-BU	86700	2300	ug		27-Jun-21	00:00		16-Jul-21	1506121	✓	✓	Filter	Particulates
Total Metals (Filter)																
Arsenic (As)	L2612385-11	NORTH-TSP-370	MET-IO3.5-MS-BU	<3.0	3.0	ug		27-Jun-21	00:00	19-Jul-21	21-Jul-21	1508243	✓	✓	Filter	Total Metals
Cadmium (Cd)	L2612385-11	NORTH-TSP-370	MET-IO3.5-MS-BU	<2.0	2.0	ug		27-Jun-21	00:00	19-Jul-21	21-Jul-21	1508243	✓	✓	Filter	Total Metals
Chromium (Cr)	L2612385-11	NORTH-TSP-370	MET-IO3.5-MS-BU	<5.0	5.0	ug		27-Jun-21	00:00	19-Jul-21	21-Jul-21	1508243	✓	✓	Filter	Total Metals
Cobalt (Co)	L2612385-11	NORTH-TSP-370	MET-IO3.5-MS-BU	<2.0	2.0	ug		27-Jun-21	00:00	19-Jul-21	21-Jul-21	1508243	✓	✓	Filter	Total Metals
Copper (Cu)	L2612385-11	NORTH-TSP-370	MET-IO3.5-MS-BU	143	4.0	ug		27-Jun-21	00:00	19-Jul-21	21-Jul-21	1508243	✓	✓	Filter	Total Metals
Iron (Fe)	L2612385-11	NORTH-TSP-370	MET-IO3.5-MS-BU	1220	20	ug		27-Jun-21	00:00	19-Jul-21	21-Jul-21	1508243	✓	✓	Filter	Total Metals
Lead (Pb)	L2612385-11	NORTH-TSP-370	MET-IO3.5-MS-BU	<3.0	3.0	ug		27-Jun-21	00:00	19-Jul-21	21-Jul-21	1508243	✓	✓	Filter	Total Metals
Manganese (Mn)	L2612385-11	NORTH-TSP-370	MET-IO3.5-MS-BU	37.7	1.0	ug		27-Jun-21	00:00	19-Jul-21	21-Jul-21	1508243	✓	✓	Filter	Total Metals

Results of Analysis L2612385

Job Reference NEW GOLD RRP
Report To Sarah Flesher, New Gold Inc. Rainy River Project
Date Received 12-Jul-2021 10:00
Report Date 9-Aug-2021 14:35
Report Version 1

Parameter	ALS ID	Client Sample ID	ALS Test Code	Results	Detection Limit	Units	Qual	Date Sampled	Time Sampled	Prep Date	Analysis Date	QC Lot	QC Eval	Hold Time Eval	Matrix	Class
Nickel (Ni)	L2612385-11	NORTH-TSP-370	MET-IO3.5-MS-BU	<3.0	3.0	ug		27-Jun-21	00:00	19-Jul-21	21-Jul-21	1508243	✓	✓	Filter	Total Metals
Selenium (Se)	L2612385-11	NORTH-TSP-370	MET-IO3.5-MS-BU	<10	10	ug		27-Jun-21	00:00	19-Jul-21	21-Jul-21	1508243	✓	✓	Filter	Total Metals
Vanadium (V)	L2612385-11	NORTH-TSP-370	MET-IO3.5-MS-BU	<5.0	5.0	ug		27-Jun-21	00:00	19-Jul-21	21-Jul-21	1508243	✓	✓	Filter	Total Metals
Zinc (Zn)	L2612385-11	NORTH-TSP-370	MET-IO3.5-MS-BU	33.3	5.0	ug		27-Jun-21	00:00	19-Jul-21	21-Jul-21	1508243	✓	✓	Filter	Total Metals
Particulates (Filter)																
Total particulate	L2612385-12	NORTH-TSP-371	PART-HIVOL-GRAV-BU	85400	2300	ug		03-Jul-21	00:00		16-Jul-21	1506121	✓	✓	Filter	Particulates
Total Metals (Filter)																
Arsenic (As)	L2612385-12	NORTH-TSP-371	MET-IO3.5-MS-BU	<3.0	3.0	ug		03-Jul-21	00:00	19-Jul-21	21-Jul-21	1508243	✓	✓	Filter	Total Metals
Cadmium (Cd)	L2612385-12	NORTH-TSP-371	MET-IO3.5-MS-BU	<2.0	2.0	ug		03-Jul-21	00:00	19-Jul-21	21-Jul-21	1508243	✓	✓	Filter	Total Metals
Chromium (Cr)	L2612385-12	NORTH-TSP-371	MET-IO3.5-MS-BU	<5.0	5.0	ug		03-Jul-21	00:00	19-Jul-21	21-Jul-21	1508243	✓	✓	Filter	Total Metals
Cobalt (Co)	L2612385-12	NORTH-TSP-371	MET-IO3.5-MS-BU	<2.0	2.0	ug		03-Jul-21	00:00	19-Jul-21	21-Jul-21	1508243	✓	✓	Filter	Total Metals
Copper (Cu)	L2612385-12	NORTH-TSP-371	MET-IO3.5-MS-BU	162	4.0	ug		03-Jul-21	00:00	19-Jul-21	21-Jul-21	1508243	✓	✓	Filter	Total Metals
Iron (Fe)	L2612385-12	NORTH-TSP-371	MET-IO3.5-MS-BU	1480	20	ug		03-Jul-21	00:00	19-Jul-21	21-Jul-21	1508243	✓	✓	Filter	Total Metals
Lead (Pb)	L2612385-12	NORTH-TSP-371	MET-IO3.5-MS-BU	<3.0	3.0	ug		03-Jul-21	00:00	19-Jul-21	21-Jul-21	1508243	✓	✓	Filter	Total Metals
Manganese (Mn)	L2612385-12	NORTH-TSP-371	MET-IO3.5-MS-BU	57.6	1.0	ug		03-Jul-21	00:00	19-Jul-21	21-Jul-21	1508243	✓	✓	Filter	Total Metals
Nickel (Ni)	L2612385-12	NORTH-TSP-371	MET-IO3.5-MS-BU	<3.0	3.0	ug		03-Jul-21	00:00	19-Jul-21	21-Jul-21	1508243	✓	✓	Filter	Total Metals
Selenium (Se)	L2612385-12	NORTH-TSP-371	MET-IO3.5-MS-BU	<10	10	ug		03-Jul-21	00:00	19-Jul-21	21-Jul-21	1508243	✓	✓	Filter	Total Metals
Vanadium (V)	L2612385-12	NORTH-TSP-371	MET-IO3.5-MS-BU	<5.0	5.0	ug		03-Jul-21	00:00	19-Jul-21	21-Jul-21	1508243	✓	✓	Filter	Total Metals
Zinc (Zn)	L2612385-12	NORTH-TSP-371	MET-IO3.5-MS-BU	20.3	5.0	ug		03-Jul-21	00:00	19-Jul-21	21-Jul-21	1508243	✓	✓	Filter	Total Metals
Particulates (Filter)																
Total particulate	L2612385-13	NORTHWEST-TSP-366	PART-HIVOL-GRAV-BU	38100	2300	ug		03-Jun-21	00:00		16-Jul-21	1506121	✓	✓	Filter	Particulates
Total Metals (Filter)																
Arsenic (As)	L2612385-13	NORTHWEST-TSP-366	MET-IO3.5-MS-BU	<3.0	3.0	ug		03-Jun-21	00:00	19-Jul-21	21-Jul-21	1508243	✓	✓	Filter	Total Metals
Cadmium (Cd)	L2612385-13	NORTHWEST-TSP-366	MET-IO3.5-MS-BU	<2.0	2.0	ug		03-Jun-21	00:00	19-Jul-21	21-Jul-21	1508243	✓	✓	Filter	Total Metals
Chromium (Cr)	L2612385-13	NORTHWEST-TSP-366	MET-IO3.5-MS-BU	<5.0	5.0	ug		03-Jun-21	00:00	19-Jul-21	21-Jul-21	1508243	✓	✓	Filter	Total Metals
Cobalt (Co)	L2612385-13	NORTHWEST-TSP-366	MET-IO3.5-MS-BU	<2.0	2.0	ug		03-Jun-21	00:00	19-Jul-21	21-Jul-21	1508243	✓	✓	Filter	Total Metals
Copper (Cu)	L2612385-13	NORTHWEST-TSP-366	MET-IO3.5-MS-BU	274	4.0	ug		03-Jun-21	00:00	19-Jul-21	21-Jul-21	1508243	✓	✓	Filter	Total Metals
Iron (Fe)	L2612385-13	NORTHWEST-TSP-366	MET-IO3.5-MS-BU	590	20	ug		03-Jun-21	00:00	19-Jul-21	21-Jul-21	1508243	✓	✓	Filter	Total Metals
Lead (Pb)	L2612385-13	NORTHWEST-TSP-366	MET-IO3.5-MS-BU	<3.0	3.0	ug		03-Jun-21	00:00	19-Jul-21	21-Jul-21	1508243	✓	✓	Filter	Total Metals
Manganese (Mn)	L2612385-13	NORTHWEST-TSP-366	MET-IO3.5-MS-BU	23.8	1.0	ug		03-Jun-21	00:00	19-Jul-21	21-Jul-21	1508243	✓	✓	Filter	Total Metals
Nickel (Ni)	L2612385-13	NORTHWEST-TSP-366	MET-IO3.5-MS-BU	<3.0	3.0	ug		03-Jun-21	00:00	19-Jul-21	21-Jul-21	1508243	✓	✓	Filter	Total Metals
Selenium (Se)	L2612385-13	NORTHWEST-TSP-366	MET-IO3.5-MS-BU	<10	10	ug		03-Jun-21	00:00	19-Jul-21	21-Jul-21	1508243	✓	✓	Filter	Total Metals
Vanadium (V)	L2612385-13	NORTHWEST-TSP-366	MET-IO3.5-MS-BU	<5.0	5.0	ug		03-Jun-21	00:00	19-Jul-21	21-Jul-21	1508243	✓	✓	Filter	Total Metals
Zinc (Zn)	L2612385-13	NORTHWEST-TSP-366	MET-IO3.5-MS-BU	10.4	5.0	ug		03-Jun-21	00:00	19-Jul-21	21-Jul-21	1508243	✓	✓	Filter	Total Metals
Particulates (Filter)																
Total particulate	L2612385-14	NORTHWEST-TSP-367	PART-HIVOL-GRAV-BU	81700	2300	ug		09-Jun-21	00:00		16-Jul-21	1506121	✓	✓	Filter	Particulates
Total Metals (Filter)																
Arsenic (As)	L2612385-14	NORTHWEST-TSP-367	MET-IO3.5-MS-BU	<3.0	3.0	ug		09-Jun-21	00:00	19-Jul-21	21-Jul-21	1508243	✓	✓	Filter	Total Metals
Cadmium (Cd)	L2612385-14	NORTHWEST-TSP-367	MET-IO3.5-MS-BU	<2.0	2.0	ug		09-Jun-21	00:00	19-Jul-21	21-Jul-21	1508243	✓	✓	Filter	Total Metals
Chromium (Cr)	L2612385-14	NORTHWEST-TSP-367	MET-IO3.5-MS-BU	<5.0	5.0	ug		09-Jun-21	00:00	19-Jul-21	21-Jul-21	1508243	✓	✓	Filter	Total Metals
Cobalt (Co)	L2612385-14	NORTHWEST-TSP-367	MET-IO3.5-MS-BU	<2.0	2.0	ug		09-Jun-21	00:00	19-Jul-21	21-Jul-21	1508243	✓	✓	Filter	Total Metals
Copper (Cu)	L2612385-14	NORTHWEST-TSP-367	MET-IO3.5-MS-BU	190	4.0	ug		09-Jun-21	00:00	19-Jul-21	21-Jul-21	1508243	✓	✓	Filter	Total Metals
Iron (Fe)	L2612385-14	NORTHWEST-TSP-367	MET-IO3.5-MS-BU	1670	20	ug		09-Jun-21	00:00	19-Jul-21	21-Jul-21	1508243	✓	✓	Filter	Total Metals
Lead (Pb)	L2612385-14	NORTHWEST-TSP-367	MET-IO3.5-MS-BU	3.3	3.0	ug		09-Jun-21	00:00	19-Jul-21	21-Jul-21	1508243	✓	✓	Filter	Total Metals
Manganese (Mn)	L2612385-14	NORTHWEST-TSP-367	MET-IO3.5-MS-BU	50.9	1.0	ug		09-Jun-21	00:00	19-Jul-21	21-Jul-21	1508243	✓	✓	Filter	Total Metals
Nickel (Ni)	L2612385-14	NORTHWEST-TSP-367	MET-IO3.5-MS-BU	<3.0	3.0	ug		09-Jun-21	00:00	19-Jul-21	21-Jul-21	1508243	✓	✓	Filter	Total Metals
Selenium (Se)	L2612385-14	NORTHWEST-TSP-367	MET-IO3.5-MS-BU	<10	10	ug		09-Jun-21	00:00	19-Jul-21	21-Jul-21	1508243	✓	✓	Filter	Total Metals
Vanadium (V)	L2612385-14	NORTHWEST-TSP-367	MET-IO3.5-MS-BU	<5.0	5.0	ug		09-Jun-21	00:00	19-Jul-21	21-Jul-21	1508243	✓	✓	Filter	Total Metals
Zinc (Zn)	L2612385-14	NORTHWEST-TSP-367	MET-IO3.5-MS-BU	33.8	5.0	ug		09-Jun-21	00:00	19-Jul-21	21-Jul-21	1508243	✓	✓	Filter	Total Metals
Particulates (Filter)																
Total particulate	L2612385-15	NORTHWEST-TSP-368	PART-HIVOL-GRAV-BU	63300	2300	ug		15-Jun-21	00:00		16-Jul-21	1506121	✓	✓	Filter	Particulates
Total Metals (Filter)																
Arsenic (As)	L2612385-15	NORTHWEST-TSP-368	MET-IO3.5-MS-BU	<3.0	3.0	ug		15-Jun-21	00:00	19-Jul-21	21-Jul-21	1508243	✓	✓	Filter	Total Metals

Results of Analysis L2612385

Job Reference NEW GOLD RRP
Report To Sarah Flesher, New Gold Inc. Rainy River Project
Date Received 12-Jul-2021 10:00
Report Date 9-Aug-2021 14:35
Report Version 1

Parameter	ALS ID	Client Sample ID	ALS Test Code	Results	Detection Limit	Units	Qual	Date Sampled	Time Sampled	Prep Date	Analysis Date	QC Lot	QC Eval	Hold Time Eval	Matrix	Class
Cadmium (Cd)	L2612385-15	NORTHWEST-TSP-368	MET-IO3.5-MS-BU	<2.0	2.0	ug		15-Jun-21	00:00	19-Jul-21	21-Jul-21	1508243	✓	✓	Filter	Total Metals
Chromium (Cr)	L2612385-15	NORTHWEST-TSP-368	MET-IO3.5-MS-BU	<5.0	5.0	ug		15-Jun-21	00:00	19-Jul-21	21-Jul-21	1508243	✓	✓	Filter	Total Metals
Cobalt (Co)	L2612385-15	NORTHWEST-TSP-368	MET-IO3.5-MS-BU	<2.0	2.0	ug		15-Jun-21	00:00	19-Jul-21	21-Jul-21	1508243	✓	✓	Filter	Total Metals
Copper (Cu)	L2612385-15	NORTHWEST-TSP-368	MET-IO3.5-MS-BU	183	4.0	ug		15-Jun-21	00:00	19-Jul-21	21-Jul-21	1508243	✓	✓	Filter	Total Metals
Iron (Fe)	L2612385-15	NORTHWEST-TSP-368	MET-IO3.5-MS-BU	1130	20	ug		15-Jun-21	00:00	19-Jul-21	21-Jul-21	1508243	✓	✓	Filter	Total Metals
Lead (Pb)	L2612385-15	NORTHWEST-TSP-368	MET-IO3.5-MS-BU	<3.0	3.0	ug		15-Jun-21	00:00	19-Jul-21	21-Jul-21	1508243	✓	✓	Filter	Total Metals
Manganese (Mn)	L2612385-15	NORTHWEST-TSP-368	MET-IO3.5-MS-BU	31.0	1.0	ug		15-Jun-21	00:00	19-Jul-21	21-Jul-21	1508243	✓	✓	Filter	Total Metals
Nickel (Ni)	L2612385-15	NORTHWEST-TSP-368	MET-IO3.5-MS-BU	<3.0	3.0	ug		15-Jun-21	00:00	19-Jul-21	21-Jul-21	1508243	✓	✓	Filter	Total Metals
Selenium (Se)	L2612385-15	NORTHWEST-TSP-368	MET-IO3.5-MS-BU	<10	10	ug		15-Jun-21	00:00	19-Jul-21	21-Jul-21	1508243	✓	✓	Filter	Total Metals
Vanadium (V)	L2612385-15	NORTHWEST-TSP-368	MET-IO3.5-MS-BU	<5.0	5.0	ug		15-Jun-21	00:00	19-Jul-21	21-Jul-21	1508243	✓	✓	Filter	Total Metals
Zinc (Zn)	L2612385-15	NORTHWEST-TSP-368	MET-IO3.5-MS-BU	17.6	5.0	ug		15-Jun-21	00:00	19-Jul-21	21-Jul-21	1508243	✓	✓	Filter	Total Metals
Particulates (Filter)																
Total particulate	L2612385-16	NORTHWEST-TSP-369	PART-HIVOL-GRAV-BU	30900	2300	ug		21-Jun-21	00:00		16-Jul-21	1506121	✓	✓	Filter	Particulates
Total Metals (Filter)																
Arsenic (As)	L2612385-16	NORTHWEST-TSP-369	MET-IO3.5-MS-BU	<3.0	3.0	ug		21-Jun-21	00:00	19-Jul-21	21-Jul-21	1508243	✓	✓	Filter	Total Metals
Cadmium (Cd)	L2612385-16	NORTHWEST-TSP-369	MET-IO3.5-MS-BU	<2.0	2.0	ug		21-Jun-21	00:00	19-Jul-21	21-Jul-21	1508243	✓	✓	Filter	Total Metals
Chromium (Cr)	L2612385-16	NORTHWEST-TSP-369	MET-IO3.5-MS-BU	<5.0	5.0	ug		21-Jun-21	00:00	19-Jul-21	21-Jul-21	1508243	✓	✓	Filter	Total Metals
Cobalt (Co)	L2612385-16	NORTHWEST-TSP-369	MET-IO3.5-MS-BU	<2.0	2.0	ug		21-Jun-21	00:00	19-Jul-21	21-Jul-21	1508243	✓	✓	Filter	Total Metals
Copper (Cu)	L2612385-16	NORTHWEST-TSP-369	MET-IO3.5-MS-BU	180	4.0	ug		21-Jun-21	00:00	19-Jul-21	21-Jul-21	1508243	✓	✓	Filter	Total Metals
Iron (Fe)	L2612385-16	NORTHWEST-TSP-369	MET-IO3.5-MS-BU	312	20	ug		21-Jun-21	00:00	19-Jul-21	21-Jul-21	1508243	✓	✓	Filter	Total Metals
Lead (Pb)	L2612385-16	NORTHWEST-TSP-369	MET-IO3.5-MS-BU	<3.0	3.0	ug		21-Jun-21	00:00	19-Jul-21	21-Jul-21	1508243	✓	✓	Filter	Total Metals
Manganese (Mn)	L2612385-16	NORTHWEST-TSP-369	MET-IO3.5-MS-BU	7.6	1.0	ug		21-Jun-21	00:00	19-Jul-21	21-Jul-21	1508243	✓	✓	Filter	Total Metals
Nickel (Ni)	L2612385-16	NORTHWEST-TSP-369	MET-IO3.5-MS-BU	<3.0	3.0	ug		21-Jun-21	00:00	19-Jul-21	21-Jul-21	1508243	✓	✓	Filter	Total Metals
Selenium (Se)	L2612385-16	NORTHWEST-TSP-369	MET-IO3.5-MS-BU	<10	10	ug		21-Jun-21	00:00	19-Jul-21	21-Jul-21	1508243	✓	✓	Filter	Total Metals
Vanadium (V)	L2612385-16	NORTHWEST-TSP-369	MET-IO3.5-MS-BU	<5.0	5.0	ug		21-Jun-21	00:00	19-Jul-21	21-Jul-21	1508243	✓	✓	Filter	Total Metals
Zinc (Zn)	L2612385-16	NORTHWEST-TSP-369	MET-IO3.5-MS-BU	<5.0	5.0	ug		21-Jun-21	00:00	19-Jul-21	21-Jul-21	1508243	✓	✓	Filter	Total Metals
Particulates (Filter)																
Total particulate	L2612385-17	NORTHWEST-TSP-370	PART-HIVOL-GRAV-BU	24500	2300	ug		27-Jun-21	00:00		16-Jul-21	1506121	✓	✓	Filter	Particulates
Total Metals (Filter)																
Arsenic (As)	L2612385-17	NORTHWEST-TSP-370	MET-IO3.5-MS-BU	<3.0	3.0	ug		27-Jun-21	00:00	19-Jul-21	21-Jul-21	1508243	✓	✓	Filter	Total Metals
Cadmium (Cd)	L2612385-17	NORTHWEST-TSP-370	MET-IO3.5-MS-BU	<2.0	2.0	ug		27-Jun-21	00:00	19-Jul-21	21-Jul-21	1508243	✓	✓	Filter	Total Metals
Chromium (Cr)	L2612385-17	NORTHWEST-TSP-370	MET-IO3.5-MS-BU	<5.0	5.0	ug		27-Jun-21	00:00	19-Jul-21	21-Jul-21	1508243	✓	✓	Filter	Total Metals
Cobalt (Co)	L2612385-17	NORTHWEST-TSP-370	MET-IO3.5-MS-BU	<2.0	2.0	ug		27-Jun-21	00:00	19-Jul-21	21-Jul-21	1508243	✓	✓	Filter	Total Metals
Copper (Cu)	L2612385-17	NORTHWEST-TSP-370	MET-IO3.5-MS-BU	224	4.0	ug		27-Jun-21	00:00	19-Jul-21	21-Jul-21	1508243	✓	✓	Filter	Total Metals
Iron (Fe)	L2612385-17	NORTHWEST-TSP-370	MET-IO3.5-MS-BU	137	20	ug		27-Jun-21	00:00	19-Jul-21	21-Jul-21	1508243	✓	✓	Filter	Total Metals
Lead (Pb)	L2612385-17	NORTHWEST-TSP-370	MET-IO3.5-MS-BU	<3.0	3.0	ug		27-Jun-21	00:00	19-Jul-21	21-Jul-21	1508243	✓	✓	Filter	Total Metals
Manganese (Mn)	L2612385-17	NORTHWEST-TSP-370	MET-IO3.5-MS-BU	6.7	1.0	ug		27-Jun-21	00:00	19-Jul-21	21-Jul-21	1508243	✓	✓	Filter	Total Metals
Nickel (Ni)	L2612385-17	NORTHWEST-TSP-370	MET-IO3.5-MS-BU	<3.0	3.0	ug		27-Jun-21	00:00	19-Jul-21	21-Jul-21	1508243	✓	✓	Filter	Total Metals
Selenium (Se)	L2612385-17	NORTHWEST-TSP-370	MET-IO3.5-MS-BU	<10	10	ug		27-Jun-21	00:00	19-Jul-21	21-Jul-21	1508243	✓	✓	Filter	Total Metals
Vanadium (V)	L2612385-17	NORTHWEST-TSP-370	MET-IO3.5-MS-BU	<5.0	5.0	ug		27-Jun-21	00:00	19-Jul-21	21-Jul-21	1508243	✓	✓	Filter	Total Metals
Zinc (Zn)	L2612385-17	NORTHWEST-TSP-370	MET-IO3.5-MS-BU	8.6	5.0	ug		27-Jun-21	00:00	19-Jul-21	21-Jul-21	1508243	✓	✓	Filter	Total Metals
Particulates (Filter)																
Total particulate	L2612385-18	NORTHWEST-TSP-371	PART-HIVOL-GRAV-BU	61500	2300	ug		03-Jul-21	00:00		16-Jul-21	1506121	✓	✓	Filter	Particulates
Total Metals (Filter)																
Arsenic (As)	L2612385-18	NORTHWEST-TSP-371	MET-IO3.5-MS-BU	<3.0	3.0	ug		03-Jul-21	00:00	19-Jul-21	21-Jul-21	1508243	✓	✓	Filter	Total Metals
Cadmium (Cd)	L2612385-18	NORTHWEST-TSP-371	MET-IO3.5-MS-BU	<2.0	2.0	ug		03-Jul-21	00:00	19-Jul-21	21-Jul-21	1508243	✓	✓	Filter	Total Metals
Chromium (Cr)	L2612385-18	NORTHWEST-TSP-371	MET-IO3.5-MS-BU	<5.0	5.0	ug		03-Jul-21	00:00	19-Jul-21	21-Jul-21	1508243	✓	✓	Filter	Total Metals
Cobalt (Co)	L2612385-18	NORTHWEST-TSP-371	MET-IO3.5-MS-BU	<2.0	2.0	ug		03-Jul-21	00:00	19-Jul-21	21-Jul-21	1508243	✓	✓	Filter	Total Metals
Copper (Cu)	L2612385-18	NORTHWEST-TSP-371	MET-IO3.5-MS-BU	183	4.0	ug		03-Jul-21	00:00	19-Jul-21	21-Jul-21	1508243	✓	✓	Filter	Total Metals
Iron (Fe)	L2612385-18	NORTHWEST-TSP-371	MET-IO3.5-MS-BU	756	20	ug		03-Jul-21	00:00	19-Jul-21	21-Jul-21	1508243	✓	✓	Filter	Total Metals
Lead (Pb)	L2612385-18	NORTHWEST-TSP-371	MET-IO3.5-MS-BU	<3.0	3.0	ug		03-Jul-21	00:00	19-Jul-21	21-Jul-21	1508243	✓	✓	Filter	Total Metals
Manganese (Mn)	L2612385-18	NORTHWEST-TSP-371	MET-IO3.5-MS-BU	43.3	1.0	ug		03-Jul-21	00:00	19-Jul-21	21-Jul-21	1508243	✓	✓	Filter	Total Metals
Nickel (Ni)	L2612385-18	NORTHWEST-TSP-371	MET-IO3.5-MS-BU	<3.0	3.0	ug		03-Jul-21	00:00	19-Jul-21	21-Jul-21	1508243	✓	✓	Filter	Total Metals
Selenium (Se)	L2612385-18	NORTHWEST-TSP-371	MET-IO3.5-MS-BU	<10	10	ug		03-Jul-21	00:00	19-Jul-21	21-Jul-21	1508243	✓	✓	Filter	Total Metals
Vanadium (V)	L2612385-18	NORTHWEST-TSP-371	MET-IO3.5-MS-BU	<5.0	5.0	ug		03-Jul-21	00:00	19-Jul-21	21-Jul-21	1508243	✓	✓	Filter	Total Metals

Results of Analysis L2612385

Job Reference NEW GOLD RRP
Report To Sarah Flesher, New Gold Inc. Rainy River Project
Date Received 12-Jul-2021 10:00
Report Date 9-Aug-2021 14:35
Report Version 1

Parameter	ALS ID	Client Sample ID	ALS Test Code	Results	Detection Limit	Units	Qual	Date Sampled	Time Sampled	Prep Date	Analysis Date	QC Lot	QC Eval	Hold Time Eval	Matrix	Class
Zinc (Zn)	L2612385-18	NORTHWEST-TSP-371	MET-IO3.5-MS-BU	14.1	5.0	ug		03-Jul-21	00:00	19-Jul-21	21-Jul-21	1508243	✓	✓	Filter	Total Metals
Particulates (Filter)																
Total particulate	L2612385-19	TSP-TRAVEL BLANK	PART-HIVOL-GRAV-BU	3900	2300	ug		07-Jul-21	00:00		16-Jul-21	1506121	✓	✓	Filter	Particulates
Total Metals (Filter)																
Arsenic (As)	L2612385-19	TSP-TRAVEL BLANK	MET-IO3.5-MS-BU	<3.0	3.0	ug		07-Jul-21	00:00	19-Jul-21	21-Jul-21	1508243	✓	✓	Filter	Total Metals
Cadmium (Cd)	L2612385-19	TSP-TRAVEL BLANK	MET-IO3.5-MS-BU	<2.0	2.0	ug		07-Jul-21	00:00	19-Jul-21	21-Jul-21	1508243	✓	✓	Filter	Total Metals
Chromium (Cr)	L2612385-19	TSP-TRAVEL BLANK	MET-IO3.5-MS-BU	<5.0	5.0	ug		07-Jul-21	00:00	19-Jul-21	21-Jul-21	1508243	✓	✓	Filter	Total Metals
Cobalt (Co)	L2612385-19	TSP-TRAVEL BLANK	MET-IO3.5-MS-BU	<2.0	2.0	ug		07-Jul-21	00:00	19-Jul-21	21-Jul-21	1508243	✓	✓	Filter	Total Metals
Copper (Cu)	L2612385-19	TSP-TRAVEL BLANK	MET-IO3.5-MS-BU	<4.0	4.0	ug		07-Jul-21	00:00	19-Jul-21	21-Jul-21	1508243	✓	✓	Filter	Total Metals
Iron (Fe)	L2612385-19	TSP-TRAVEL BLANK	MET-IO3.5-MS-BU	<20	20	ug		07-Jul-21	00:00	19-Jul-21	21-Jul-21	1508243	✓	✓	Filter	Total Metals
Lead (Pb)	L2612385-19	TSP-TRAVEL BLANK	MET-IO3.5-MS-BU	<3.0	3.0	ug		07-Jul-21	00:00	19-Jul-21	21-Jul-21	1508243	✓	✓	Filter	Total Metals
Manganese (Mn)	L2612385-19	TSP-TRAVEL BLANK	MET-IO3.5-MS-BU	<1.0	1.0	ug		07-Jul-21	00:00	19-Jul-21	21-Jul-21	1508243	✓	✓	Filter	Total Metals
Nickel (Ni)	L2612385-19	TSP-TRAVEL BLANK	MET-IO3.5-MS-BU	<3.0	3.0	ug		07-Jul-21	00:00	19-Jul-21	21-Jul-21	1508243	✓	✓	Filter	Total Metals
Selenium (Se)	L2612385-19	TSP-TRAVEL BLANK	MET-IO3.5-MS-BU	<10	10	ug		07-Jul-21	00:00	19-Jul-21	21-Jul-21	1508243	✓	✓	Filter	Total Metals
Vanadium (V)	L2612385-19	TSP-TRAVEL BLANK	MET-IO3.5-MS-BU	<5.0	5.0	ug		07-Jul-21	00:00	19-Jul-21	21-Jul-21	1508243	✓	✓	Filter	Total Metals
Zinc (Zn)	L2612385-19	TSP-TRAVEL BLANK	MET-IO3.5-MS-BU	<5.0	5.0	ug		07-Jul-21	00:00	19-Jul-21	21-Jul-21	1508243	✓	✓	Filter	Total Metals
Particulates (Filter)																
Total particulate	L2612385-20	SOUTH-PM2.5-366	PART-M212 F-GRAV-BU	146	15	ug		03-Jun-21	00:00		29-Jul-21	1512481	✓	✓	Filter	Particulates
Total particulate	L2612385-21	SOUTH-PM2.5-367	PART-M212 F-GRAV-BU	139	15	ug		09-Jun-21	00:00		29-Jul-21	1512481	✓	✓	Filter	Particulates
Total particulate	L2612385-22	SOUTH-PM2.5-368	PART-M212 F-GRAV-BU	130	15	ug		15-Jun-21	00:00		29-Jul-21	1512481	✓	✓	Filter	Particulates
Total particulate	L2612385-23	SOUTH-PM2.5-369	PART-M212 F-GRAV-BU	20	15	ug		21-Jun-21	00:00		29-Jul-21	1512481	✓	✓	Filter	Particulates
Total particulate	L2612385-24	SOUTH-PM2.5-370	PART-M212 F-GRAV-BU	136	15	ug		27-Jun-21	00:00		29-Jul-21	1512481	✓	✓	Filter	Particulates
Total particulate	L2612385-25	SOUTH-PM2.5-371	PART-M212 F-GRAV-BU	330	15	ug		03-Jul-21	00:00		29-Jul-21	1512481	✓	✓	Filter	Particulates
Total particulate	L2612385-26	NORTH-PM2.5-366	PART-M212 F-GRAV-BU	87	15	ug		03-Jun-21	00:00		29-Jul-21	1512481	✓	✓	Filter	Particulates
Total particulate	L2612385-27	NORTH-PM2.5-367	PART-M212 F-GRAV-BU	127	15	ug		09-Jun-21	00:00		29-Jul-21	1512481	✓	✓	Filter	Particulates
Total particulate	L2612385-28	NORTH-PM2.5-368	PART-M212 F-GRAV-BU	<15	15	ug		15-Jun-21	00:00		29-Jul-21	1512481	✓	✓	Filter	Particulates
Total particulate	L2612385-29	NORTH-PM2.5-369	PART-M212 F-GRAV-BU	<15	15	ug		21-Jun-21	00:00		29-Jul-21	1512481	✓	✓	Filter	Particulates
Total particulate	L2612385-30	NORTH-PM2.5-370	PART-M212 F-GRAV-BU	94	15	ug		27-Jun-21	00:00		29-Jul-21	1512481	✓	✓	Filter	Particulates
Total particulate	L2612385-31	NORTH-PM2.5-371	PART-M212 F-GRAV-BU	315	15	ug		03-Jul-21	00:00		29-Jul-21	1512481	✓	✓	Filter	Particulates
Total particulate	L2612385-32	NORTHWEST-PM2.5-366	PART-M212 F-GRAV-BU	118	15	ug		03-Jun-21	00:00		29-Jul-21	1512481	✓	✓	Filter	Particulates
Total particulate	L2612385-33	NORTHWEST-PM2.5-367	PART-M212 F-GRAV-BU	162	15	ug		09-Jun-21	00:00		29-Jul-21	1512481	✓	✓	Filter	Particulates
Total particulate	L2612385-34	NORTHWEST-PM2.5-368	PART-M212 F-GRAV-BU	<15	15	ug		15-Jun-21	00:00		29-Jul-21	1512481	✓	✓	Filter	Particulates
Total particulate	L2612385-35	NORTHWEST-PM2.5-369	PART-M212 F-GRAV-BU	<15	15	ug		21-Jun-21	00:00		29-Jul-21	1512481	✓	✓	Filter	Particulates
Total particulate	L2612385-36	NORTHWEST-PM2.5-370	PART-M212 F-GRAV-BU	80	15	ug		27-Jun-21	00:00		29-Jul-21	1512481	✓	✓	Filter	Particulates
Total particulate	L2612385-37	NORTHWEST-PM2.5-371	PART-M212 F-GRAV-BU	272	15	ug		03-Jul-21	00:00		29-Jul-21	1512481	✓	✓	Filter	Particulates
Total particulate	L2612385-38	PM2.5-TRAVEL BLANK	PART-M212 F-GRAV-BU	19	15	ug		07-Jul-21	00:00		29-Jul-21	1512481	✓	✓	Filter	Particulates
Particulates (Dustfall)																
Fixed Dustfall	L2612385-39	NOP1-DUSTFALL-6	DUSTFALLS-ALL-DM2-VA	17.8	0.10	mg/dm2.day		30-Jun-21	00:00		03-Aug-21	1513811	✓	✓	Dustfall	Particulates
Volatile Dustfall	L2612385-39	NOP1-DUSTFALL-6	DUSTFALLS-ALL-DM2-VA	5.41	0.10	mg/dm2.day		30-Jun-21	00:00		03-Aug-21	1513811	✓	✓	Dustfall	Particulates
Total Dustfall	L2612385-39	NOP1-DUSTFALL-6	DUSTFALLS-ALL-DM2-VA	23.2	0.10	mg/dm2.day		30-Jun-21	00:00		03-Aug-21	1513811	✓	✓	Dustfall	Particulates
Fixed Insoluble Dustfall	L2612385-39	NOP1-DUSTFALL-6	DUSTFALLS-ALL-DM2-VA	16.1	0.10	mg/dm2.day		30-Jun-21	00:00		03-Aug-21	1513811	✓	✓	Dustfall	Particulates
Volatile Insoluble Dustfall	L2612385-39	NOP1-DUSTFALL-6	DUSTFALLS-ALL-DM2-VA	0.47	0.10	mg/dm2.day		30-Jun-21	00:00		03-Aug-21	1513811	✓	✓	Dustfall	Particulates
Total Insoluble Dustfall	L2612385-39	NOP1-DUSTFALL-6	DUSTFALLS-ALL-DM2-VA	16.6	0.10	mg/dm2.day		30-Jun-21	00:00		03-Aug-21	1513811	✓	✓	Dustfall	Particulates
Fixed Soluble Dustfall	L2612385-39	NOP1-DUSTFALL-6	DUSTFALLS-ALL-DM2-VA	1.65	0.10	mg/dm2.day		30-Jun-21	00:00		03-Aug-21	1513811	✓	✓	Dustfall	Particulates
Volatile Soluble Dustfall	L2612385-39	NOP1-DUSTFALL-6	DUSTFALLS-ALL-DM2-VA	4.94	0.10	mg/dm2.day		30-Jun-21	00:00		03-Aug-21	1513811	✓	✓	Dustfall	Particulates
Total Soluble Dustfall	L2612385-39	NOP1-DUSTFALL-6	DUSTFALLS-ALL-DM2-VA	6.59	0.10	mg/dm2.day		30-Jun-21	00:00		03-Aug-21	1513811	✓	✓	Dustfall	Particulates
Metals (Dustfall)																
Aluminum (Al)-Total	L2612385-39	NOP1-DUSTFALL-6	MET-DUST(DM2)-MS-VA	0.0353	0.000067	mg/dm2.day		30-Jun-21	00:00	04-Aug-21	05-Aug-21	1514612	×	✓	Dustfall	Metals
Antimony (Sb)-Total	L2612385-39	NOP1-DUSTFALL-6	MET-DUST(DM2)-MS-VA	0.0000042	0.0000022	mg/dm2.day		30-Jun-21	00:00	04-Aug-21	05-Aug-21	1514612	✓	✓	Dustfall	Metals
Arsenic (As)-Total	L2612385-39	NOP1-DUSTFALL-6	MET-DUST(DM2)-MS-VA	0.0000244	0.0000022	mg/dm2.day		30-Jun-21	00:00	04-Aug-21	05-Aug-21	1514612	×	✓	Dustfall	Metals
Barium (Ba)-Total	L2612385-39	NOP1-DUSTFALL-6	MET-DUST(DM2)-MS-VA	0.000503	0.0000011	mg/dm2.day		30-Jun-21	00:00	04-Aug-21	05-Aug-21	1514612	×	✓	Dustfall	Metals
Beryllium (Be)-Total	L2612385-39	NOP1-DUSTFALL-6	MET-DUST(DM2)-MS-VA	<0.000011	0.000011	mg/dm2.day		30-Jun-21	00:00	04-Aug-21	05-Aug-21	1514612	✓	✓	Dustfall	Metals
Bismuth (Bi)-Total	L2612385-39	NOP1-DUSTFALL-6	MET-DUST(DM2)-MS-VA	<0.000011	0.000011	mg/dm2.day		30-Jun-21	00:00	04-Aug-21	05-Aug-21	1514612	✓	✓	Dustfall	Metals
Boron (B)-Total	L2612385-39	NOP1-DUSTFALL-6	MET-DUST(DM2)-MS-VA	<0.00022	0.00022	mg/dm2.day		30-Jun-21	00:00	04-Aug-21	05-Aug-21	1514612	✓	✓	Dustfall	Metals
Cadmium (Cd)-Total	L2612385-39	NOP1-DUSTFALL-6	MET-DUST(DM2)-MS-VA	0.0000037	0.0000011	mg/dm2.day		30-Jun-21	00:00	04-Aug-21	05-Aug-21	1514612	×	✓	Dustfall	Metals
Calcium (Ca)-Total	L2612385-39	NOP1-DUSTFALL-6	MET-DUST(DM2)-MS-VA	0.376	0.00045	mg/dm2.day		30-Jun-21	00:00	04-Aug-21	05-Aug-21	1514612	✓	✓	Dustfall	Metals
Chromium (Cr)-Total	L2612385-39	NOP1-DUSTFALL-6	MET-DUST(DM2)-MS-VA	0.000066	0.000011	mg/dm2.day		30-Jun-21	00:00	04-Aug-21	05-Aug-21	1514612	×	✓	Dustfall	Metals

Results of Analysis L2612385

Job Reference NEW GOLD RRP
Report To Sarah Flesher, New Gold Inc. Rainy River Project
Date Received 12-Jul-2021 10:00
Report Date 9-Aug-2021 14:35
Report Version 1

Parameter	ALS ID	Client Sample ID	ALS Test Code	Results	Detection Limit	Units	Qual	Date Sampled	Time Sampled	Prep Date	Analysis Date	QC Lot	QC Eval	Hold Time Eval	Matrix	Class
Cobalt (Co)-Total	L2612385-39	NOP1-DUSTFALL-6	MET-DUST(DM2)-MS-VA	0.0000258	0.0000022	mg/dm2.day		30-Jun-21	00:00	04-Aug-21	05-Aug-21	1514612	×	✓	Dustfall	Metals
Copper (Cu)-Total	L2612385-39	NOP1-DUSTFALL-6	MET-DUST(DM2)-MS-VA	0.000153	0.000011	mg/dm2.day		30-Jun-21	00:00	04-Aug-21	05-Aug-21	1514612	×	✓	Dustfall	Metals
Iron (Fe)-Total	L2612385-39	NOP1-DUSTFALL-6	MET-DUST(DM2)-MS-VA	0.0359	0.00067	mg/dm2.day		30-Jun-21	00:00	04-Aug-21	05-Aug-21	1514612	×	✓	Dustfall	Metals
Lead (Pb)-Total	L2612385-39	NOP1-DUSTFALL-6	MET-DUST(DM2)-MS-VA	0.000125	0.0000011	mg/dm2.day		30-Jun-21	00:00	04-Aug-21	05-Aug-21	1514612	×	✓	Dustfall	Metals
Lithium (Li)-Total	L2612385-39	NOP1-DUSTFALL-6	MET-DUST(DM2)-MS-VA	<0.00011	0.00011	mg/dm2.day		30-Jun-21	00:00	04-Aug-21	05-Aug-21	1514612	✓	✓	Dustfall	Metals
Magnesium (Mg)-Total	L2612385-39	NOP1-DUSTFALL-6	MET-DUST(DM2)-MS-VA	0.108	0.00011	mg/dm2.day		30-Jun-21	00:00	04-Aug-21	05-Aug-21	1514612	✓	✓	Dustfall	Metals
Manganese (Mn)-Total	L2612385-39	NOP1-DUSTFALL-6	MET-DUST(DM2)-MS-VA	0.00375	0.0000022	mg/dm2.day		30-Jun-21	00:00	04-Aug-21	05-Aug-21	1514612	✓	✓	Dustfall	Metals
Molybdenum (Mo)-Total	L2612385-39	NOP1-DUSTFALL-6	MET-DUST(DM2)-MS-VA	0.0000034	0.0000011	mg/dm2.day		30-Jun-21	00:00	04-Aug-21	05-Aug-21	1514612	×	✓	Dustfall	Metals
Nickel (Ni)-Total	L2612385-39	NOP1-DUSTFALL-6	MET-DUST(DM2)-MS-VA	0.000064	0.000011	mg/dm2.day		30-Jun-21	00:00	04-Aug-21	05-Aug-21	1514612	×	✓	Dustfall	Metals
Phosphorus (P)-Total	L2612385-39	NOP1-DUSTFALL-6	MET-DUST(DM2)-MS-VA	0.0028	0.0011	mg/dm2.day		30-Jun-21	00:00	04-Aug-21	05-Aug-21	1514612	✓	✓	Dustfall	Metals
Potassium (K)-Total	L2612385-39	NOP1-DUSTFALL-6	MET-DUST(DM2)-MS-VA	0.0256	0.0011	mg/dm2.day		30-Jun-21	00:00	04-Aug-21	05-Aug-21	1514612	×	✓	Dustfall	Metals
Selenium (Se)-Total	L2612385-39	NOP1-DUSTFALL-6	MET-DUST(DM2)-MS-VA	<0.000022	0.000022	mg/dm2.day		30-Jun-21	00:00	04-Aug-21	05-Aug-21	1514612	✓	✓	Dustfall	Metals
Silicon (Si)-Total	L2612385-39	NOP1-DUSTFALL-6	MET-DUST(DM2)-MS-VA	0.0584	0.0011	mg/dm2.day		30-Jun-21	00:00	04-Aug-21	05-Aug-21	1514612	×	✓	Dustfall	Metals
Silver (Ag)-Total	L2612385-39	NOP1-DUSTFALL-6	MET-DUST(DM2)-MS-VA	0.00000201	0.00000022	mg/dm2.day		30-Jun-21	00:00	04-Aug-21	05-Aug-21	1514612	×	✓	Dustfall	Metals
Sodium (Na)-Total	L2612385-39	NOP1-DUSTFALL-6	MET-DUST(DM2)-MS-VA	0.0116	0.0011	mg/dm2.day		30-Jun-21	00:00	04-Aug-21	05-Aug-21	1514612	×	✓	Dustfall	Metals
Strontium (Sr)-Total	L2612385-39	NOP1-DUSTFALL-6	MET-DUST(DM2)-MS-VA	0.000622	0.0000022	mg/dm2.day		30-Jun-21	00:00	04-Aug-21	05-Aug-21	1514612	✓	✓	Dustfall	Metals
Thallium (Tl)-Total	L2612385-39	NOP1-DUSTFALL-6	MET-DUST(DM2)-MS-VA	<0.0000022	0.0000022	mg/dm2.day		30-Jun-21	00:00	04-Aug-21	05-Aug-21	1514612	✓	✓	Dustfall	Metals
Tin (Sn)-Total	L2612385-39	NOP1-DUSTFALL-6	MET-DUST(DM2)-MS-VA	<0.0000022	0.0000022	mg/dm2.day		30-Jun-21	00:00	04-Aug-21	05-Aug-21	1514612	✓	✓	Dustfall	Metals
Titanium (Ti)-Total	L2612385-39	NOP1-DUSTFALL-6	MET-DUST(DM2)-MS-VA	0.00116	0.00022	mg/dm2.day		30-Jun-21	00:00	04-Aug-21	05-Aug-21	1514612	×	✓	Dustfall	Metals
Uranium (U)-Total	L2612385-39	NOP1-DUSTFALL-6	MET-DUST(DM2)-MS-VA	0.00000128	0.00000022	mg/dm2.day		30-Jun-21	00:00	04-Aug-21	05-Aug-21	1514612	×	✓	Dustfall	Metals
Vanadium (V)-Total	L2612385-39	NOP1-DUSTFALL-6	MET-DUST(DM2)-MS-VA	0.000071	0.000022	mg/dm2.day		30-Jun-21	00:00	04-Aug-21	05-Aug-21	1514612	×	✓	Dustfall	Metals
Zinc (Zn)-Total	L2612385-39	NOP1-DUSTFALL-6	MET-DUST(DM2)-MS-VA	0.000819	0.000067	mg/dm2.day		30-Jun-21	00:00	04-Aug-21	05-Aug-21	1514612	×	✓	Dustfall	Metals
Particulates (Dustfall)																
Fixed Dustfall	L2612385-40	CP1-DUSTFALL-6	DUSTFALLS-ALL-DM2-VA	5.49	0.10	mg/dm2.day		02-Jul-21	00:00		03-Aug-21	1513811	✓	✓	Dustfall	Particulates
Volatile Dustfall	L2612385-40	CP1-DUSTFALL-6	DUSTFALLS-ALL-DM2-VA	19.1	0.10	mg/dm2.day		02-Jul-21	00:00		03-Aug-21	1513811	✓	✓	Dustfall	Particulates
Total Dustfall	L2612385-40	CP1-DUSTFALL-6	DUSTFALLS-ALL-DM2-VA	24.6	0.10	mg/dm2.day		02-Jul-21	00:00		03-Aug-21	1513811	✓	✓	Dustfall	Particulates
Fixed Insoluble Dustfall	L2612385-40	CP1-DUSTFALL-6	DUSTFALLS-ALL-DM2-VA	0.15	0.10	mg/dm2.day		02-Jul-21	00:00		03-Aug-21	1513811	✓	✓	Dustfall	Particulates
Volatile Insoluble Dustfall	L2612385-40	CP1-DUSTFALL-6	DUSTFALLS-ALL-DM2-VA	1.34	0.10	mg/dm2.day		02-Jul-21	00:00		03-Aug-21	1513811	✓	✓	Dustfall	Particulates
Total Insoluble Dustfall	L2612385-40	CP1-DUSTFALL-6	DUSTFALLS-ALL-DM2-VA	1.49	0.10	mg/dm2.day		02-Jul-21	00:00		03-Aug-21	1513811	✓	✓	Dustfall	Particulates
Fixed Soluble Dustfall	L2612385-40	CP1-DUSTFALL-6	DUSTFALLS-ALL-DM2-VA	5.33	0.10	mg/dm2.day		02-Jul-21	00:00		03-Aug-21	1513811	✓	✓	Dustfall	Particulates
Volatile Soluble Dustfall	L2612385-40	CP1-DUSTFALL-6	DUSTFALLS-ALL-DM2-VA	17.8	0.10	mg/dm2.day		02-Jul-21	00:00		03-Aug-21	1513811	✓	✓	Dustfall	Particulates
Total Soluble Dustfall	L2612385-40	CP1-DUSTFALL-6	DUSTFALLS-ALL-DM2-VA	23.1	0.10	mg/dm2.day		02-Jul-21	00:00		03-Aug-21	1513811	✓	✓	Dustfall	Particulates
Metals (Dustfall)																
Aluminum (Al)-Total	L2612385-40	CP1-DUSTFALL-6	MET-DUST(DM2)-MS-VA	0.0216	0.000068	mg/dm2.day		02-Jul-21	00:00	03-Aug-21	04-Aug-21	1513072	✓	✓	Dustfall	Metals
Antimony (Sb)-Total	L2612385-40	CP1-DUSTFALL-6	MET-DUST(DM2)-MS-VA	0.0000030	0.0000023	mg/dm2.day		02-Jul-21	00:00	03-Aug-21	04-Aug-21	1513072	✓	✓	Dustfall	Metals
Arsenic (As)-Total	L2612385-40	CP1-DUSTFALL-6	MET-DUST(DM2)-MS-VA	0.0000295	0.0000023	mg/dm2.day		02-Jul-21	00:00	03-Aug-21	04-Aug-21	1513072	✓	✓	Dustfall	Metals
Barium (Ba)-Total	L2612385-40	CP1-DUSTFALL-6	MET-DUST(DM2)-MS-VA	0.000726	0.0000011	mg/dm2.day		02-Jul-21	00:00	03-Aug-21	04-Aug-21	1513072	×	✓	Dustfall	Metals
Beryllium (Be)-Total	L2612385-40	CP1-DUSTFALL-6	MET-DUST(DM2)-MS-VA	<0.000011	0.000011	mg/dm2.day		02-Jul-21	00:00	03-Aug-21	04-Aug-21	1513072	✓	✓	Dustfall	Metals
Bismuth (Bi)-Total	L2612385-40	CP1-DUSTFALL-6	MET-DUST(DM2)-MS-VA	<0.000011	0.000011	mg/dm2.day		02-Jul-21	00:00	03-Aug-21	04-Aug-21	1513072	✓	✓	Dustfall	Metals
Boron (B)-Total	L2612385-40	CP1-DUSTFALL-6	MET-DUST(DM2)-MS-VA	0.00030	0.00023	mg/dm2.day		02-Jul-21	00:00	03-Aug-21	04-Aug-21	1513072	✓	✓	Dustfall	Metals
Cadmium (Cd)-Total	L2612385-40	CP1-DUSTFALL-6	MET-DUST(DM2)-MS-VA	0.0000073	0.0000011	mg/dm2.day		02-Jul-21	00:00	03-Aug-21	04-Aug-21	1513072	✓	✓	Dustfall	Metals
Calcium (Ca)-Total	L2612385-40	CP1-DUSTFALL-6	MET-DUST(DM2)-MS-VA	0.504	0.00045	mg/dm2.day		02-Jul-21	00:00	03-Aug-21	04-Aug-21	1513072	✓	✓	Dustfall	Metals
Chromium (Cr)-Total	L2612385-40	CP1-DUSTFALL-6	MET-DUST(DM2)-MS-VA	0.000058	0.000011	mg/dm2.day		02-Jul-21	00:00	03-Aug-21	04-Aug-21	1513072	✓	✓	Dustfall	Metals
Cobalt (Co)-Total	L2612385-40	CP1-DUSTFALL-6	MET-DUST(DM2)-MS-VA	0.0000235	0.0000023	mg/dm2.day		02-Jul-21	00:00	03-Aug-21	04-Aug-21	1513072	✓	✓	Dustfall	Metals
Copper (Cu)-Total	L2612385-40	CP1-DUSTFALL-6	MET-DUST(DM2)-MS-VA	0.00146	0.000011	mg/dm2.day		02-Jul-21	00:00	03-Aug-21	04-Aug-21	1513072	×	✓	Dustfall	Metals
Iron (Fe)-Total	L2612385-40	CP1-DUSTFALL-6	MET-DUST(DM2)-MS-VA	0.0284	0.00068	mg/dm2.day		02-Jul-21	00:00	03-Aug-21	04-Aug-21	1513072	✓	✓	Dustfall	Metals
Lead (Pb)-Total	L2612385-40	CP1-DUSTFALL-6	MET-DUST(DM2)-MS-VA	0.0000457	0.0000011	mg/dm2.day		02-Jul-21	00:00	03-Aug-21	04-Aug-21	1513072	✓	✓	Dustfall	Metals
Lithium (Li)-Total	L2612385-40	CP1-DUSTFALL-6	MET-DUST(DM2)-MS-VA	<0.00011	0.00011	mg/dm2.day		02-Jul-21	00:00	03-Aug-21	04-Aug-21	1513072	✓	✓	Dustfall	Metals
Magnesium (Mg)-Total	L2612385-40	CP1-DUSTFALL-6	MET-DUST(DM2)-MS-VA	0.143	0.00011	mg/dm2.day		02-Jul-21	00:00	03-Aug-21	04-Aug-21	1513072	✓	✓	Dustfall	Metals
Manganese (Mn)-Total	L2612385-40	CP1-DUSTFALL-6	MET-DUST(DM2)-MS-VA	0.00186	0.0000023	mg/dm2.day		02-Jul-21	00:00	03-Aug-21	04-Aug-21	1513072	✓	✓	Dustfall	Metals
Molybdenum (Mo)-Total	L2612385-40	CP1-DUSTFALL-6	MET-DUST(DM2)-MS-VA	0.000110	0.0000011	mg/dm2.day		02-Jul-21	00:00	03-Aug-21	04-Aug-21	1513072	✓	✓	Dustfall	Metals
Nickel (Ni)-Total	L2612385-40	CP1-DUSTFALL-6	MET-DUST(DM2)-MS-VA	0.000083	0.000011	mg/dm2.day		02-Jul-21	00:00	03-Aug-21	04-Aug-21	1513072	✓	✓	Dustfall	Metals
Phosphorus (P)-Total	L2612385-40	CP1-DUSTFALL-6	MET-DUST(DM2)-MS-VA	0.658	0.0011	mg/dm2.day		02-Jul-21	00:00	03-Aug-21	04-Aug-21	1513072	✓	✓	Dustfall	Metals
Potassium (K)-Total	L2612385-40	CP1-DUSTFALL-6	MET-DUST(DM2)-MS-VA	1.38	0.0011	mg/dm2.day		02-Jul-21	00:00	03-Aug-21	04-Aug-21	1513072	✓	✓	Dustfall	Metals
Selenium (Se)-Total	L2612385-40	CP1-DUSTFALL-6	MET-DUST(DM2)-MS-VA	0.000066	0.000023	mg/dm2.day		02-Jul-21	00:00	03-Aug-21	04-Aug-21	1513072	✓	✓	Dustfall	Metals
Silicon (Si)-Total	L2612385-40	CP1-DUSTFALL-6	MET-DUST(DM2)-MS-VA	0.0418	0.0011	mg/dm2.day		02-Jul-21	00:00	03-Aug-21	04-Aug-21	1513072	✓	✓	Dustfall	Metals
Silver (Ag)-Total	L2612385-40	CP1-DUSTFALL-6	MET-DUST(DM2)-MS-VA	0.00000219	0.00000023	mg/dm2.day		02-Jul-21	00:00	03-Aug-21	04-Aug-21	1513072	✓	✓	Dustfall	Metals
Sodium (Na)-Total	L2612385-40	CP1-DUSTFALL-6	MET-DUST(DM2)-MS-VA	0.329	0.0011	mg/dm2.day		02-Jul-21	00:00	03-Aug-21	04-Aug-21	1513072	✓	✓	Dustfall	Metals
Strontium (Sr)-Total	L2612385-40	CP1-DUSTFALL-6	MET-DUST(DM2)-MS-VA	0.000758	0.0000023	mg/dm2.day		02-Jul-21	00:00	03-Aug-21	04-Aug-21	1513072	✓	✓	Dustfall	Metals
Thallium (Tl)-Total	L2612385-40	CP1-DUSTFALL-6	MET-DUST(DM2)-MS-VA	<0.0000023	0.0000023	mg/dm2.day		02-Jul-21	00:00	03-Aug-21	04-Aug-21	1513072	✓	✓	Dustfall	Metals

Results of Analysis L2612385

Job Reference NEW GOLD RRP
Report To Sarah Flesher, New Gold Inc. Rainy River Project
Date Received 12-Jul-2021 10:00
Report Date 9-Aug-2021 14:35
Report Version 1

Parameter	ALS ID	Client Sample ID	ALS Test Code	Results	Detection Limit	Units	Qual	Date Sampled	Time Sampled	Prep Date	Analysis Date	QC Lot	QC Eval	Hold Time Eval	Matrix	Class
Tin (Sn)-Total	L2612385-40	CP1-DUSTFALL-6	MET-DUST(DM2)-MS-VA	<0.0000023	0.0000023	mg/dm2.day		02-Jul-21	00:00	03-Aug-21	04-Aug-21	1513072	✓	✓	Dustfall	Metals
Titanium (Ti)-Total	L2612385-40	CP1-DUSTFALL-6	MET-DUST(DM2)-MS-VA	0.00051	0.00023	mg/dm2.day		02-Jul-21	00:00	03-Aug-21	04-Aug-21	1513072	✓	✓	Dustfall	Metals
Uranium (U)-Total	L2612385-40	CP1-DUSTFALL-6	MET-DUST(DM2)-MS-VA	0.00000153	0.00000023	mg/dm2.day		02-Jul-21	00:00	03-Aug-21	04-Aug-21	1513072	✓	✓	Dustfall	Metals
Vanadium (V)-Total	L2612385-40	CP1-DUSTFALL-6	MET-DUST(DM2)-MS-VA	0.000052	0.000023	mg/dm2.day		02-Jul-21	00:00	03-Aug-21	04-Aug-21	1513072	✓	✓	Dustfall	Metals
Zinc (Zn)-Total	L2612385-40	CP1-DUSTFALL-6	MET-DUST(DM2)-MS-VA	0.00580	0.000068	mg/dm2.day		02-Jul-21	00:00	03-Aug-21	04-Aug-21	1513072	✓	✓	Dustfall	Metals
Particulates (Dustfall)																
Fixed Dustfall	L2612385-41	WCP1-DUSTFALL-6	DUSTFALLS-ALL-DM2-VA	6.07	0.10	mg/dm2.day		02-Jul-21	00:00		03-Aug-21	1513811	✓	✓	Dustfall	Particulates
Volatile Dustfall	L2612385-41	WCP1-DUSTFALL-6	DUSTFALLS-ALL-DM2-VA	31.7	0.10	mg/dm2.day		02-Jul-21	00:00		03-Aug-21	1513811	✓	✓	Dustfall	Particulates
Total Dustfall	L2612385-41	WCP1-DUSTFALL-6	DUSTFALLS-ALL-DM2-VA	37.8	0.10	mg/dm2.day		02-Jul-21	00:00		03-Aug-21	1513811	✓	✓	Dustfall	Particulates
Fixed Insoluble Dustfall	L2612385-41	WCP1-DUSTFALL-6	DUSTFALLS-ALL-DM2-VA	1.74	0.10	mg/dm2.day		02-Jul-21	00:00		03-Aug-21	1513811	✓	✓	Dustfall	Particulates
Volatile Insoluble Dustfall	L2612385-41	WCP1-DUSTFALL-6	DUSTFALLS-ALL-DM2-VA	12.0	0.10	mg/dm2.day		02-Jul-21	00:00		03-Aug-21	1513811	✓	✓	Dustfall	Particulates
Total Insoluble Dustfall	L2612385-41	WCP1-DUSTFALL-6	DUSTFALLS-ALL-DM2-VA	13.7	0.10	mg/dm2.day		02-Jul-21	00:00		03-Aug-21	1513811	✓	✓	Dustfall	Particulates
Fixed Soluble Dustfall	L2612385-41	WCP1-DUSTFALL-6	DUSTFALLS-ALL-DM2-VA	4.34	0.10	mg/dm2.day		02-Jul-21	00:00		03-Aug-21	1513811	✓	✓	Dustfall	Particulates
Volatile Soluble Dustfall	L2612385-41	WCP1-DUSTFALL-6	DUSTFALLS-ALL-DM2-VA	19.7	0.10	mg/dm2.day		02-Jul-21	00:00		03-Aug-21	1513811	✓	✓	Dustfall	Particulates
Total Soluble Dustfall	L2612385-41	WCP1-DUSTFALL-6	DUSTFALLS-ALL-DM2-VA	24.1	0.10	mg/dm2.day		02-Jul-21	00:00		03-Aug-21	1513811	✓	✓	Dustfall	Particulates
Metals (Dustfall)																
Aluminum (Al)-Total	L2612385-41	WCP1-DUSTFALL-6	MET-DUST(DM2)-MS-VA	0.0109	0.000051	mg/dm2.day		02-Jul-21	00:00	03-Aug-21	04-Aug-21	1513072	✓	✓	Dustfall	Metals
Antimony (Sb)-Total	L2612385-41	WCP1-DUSTFALL-6	MET-DUST(DM2)-MS-VA	0.0000021	0.0000017	mg/dm2.day		02-Jul-21	00:00	03-Aug-21	04-Aug-21	1513072	✓	✓	Dustfall	Metals
Arsenic (As)-Total	L2612385-41	WCP1-DUSTFALL-6	MET-DUST(DM2)-MS-VA	0.0000227	0.0000017	mg/dm2.day		02-Jul-21	00:00	03-Aug-21	04-Aug-21	1513072	✓	✓	Dustfall	Metals
Barium (Ba)-Total	L2612385-41	WCP1-DUSTFALL-6	MET-DUST(DM2)-MS-VA	0.000296	0.00000085	mg/dm2.day		02-Jul-21	00:00	03-Aug-21	04-Aug-21	1513072	×	✓	Dustfall	Metals
Beryllium (Be)-Total	L2612385-41	WCP1-DUSTFALL-6	MET-DUST(DM2)-MS-VA	<0.0000085	0.0000085	mg/dm2.day		02-Jul-21	00:00	03-Aug-21	04-Aug-21	1513072	✓	✓	Dustfall	Metals
Bismuth (Bi)-Total	L2612385-41	WCP1-DUSTFALL-6	MET-DUST(DM2)-MS-VA	<0.0000085	0.0000085	mg/dm2.day		02-Jul-21	00:00	03-Aug-21	04-Aug-21	1513072	✓	✓	Dustfall	Metals
Boron (B)-Total	L2612385-41	WCP1-DUSTFALL-6	MET-DUST(DM2)-MS-VA	0.00056	0.00017	mg/dm2.day		02-Jul-21	00:00	03-Aug-21	04-Aug-21	1513072	✓	✓	Dustfall	Metals
Cadmium (Cd)-Total	L2612385-41	WCP1-DUSTFALL-6	MET-DUST(DM2)-MS-VA	0.00000819	0.00000085	mg/dm2.day		02-Jul-21	00:00	03-Aug-21	04-Aug-21	1513072	✓	✓	Dustfall	Metals
Calcium (Ca)-Total	L2612385-41	WCP1-DUSTFALL-6	MET-DUST(DM2)-MS-VA	0.296	0.00034	mg/dm2.day		02-Jul-21	00:00	03-Aug-21	04-Aug-21	1513072	✓	✓	Dustfall	Metals
Chromium (Cr)-Total	L2612385-41	WCP1-DUSTFALL-6	MET-DUST(DM2)-MS-VA	0.0000332	0.0000085	mg/dm2.day		02-Jul-21	00:00	03-Aug-21	04-Aug-21	1513072	✓	✓	Dustfall	Metals
Cobalt (Co)-Total	L2612385-41	WCP1-DUSTFALL-6	MET-DUST(DM2)-MS-VA	0.0000209	0.0000017	mg/dm2.day		02-Jul-21	00:00	03-Aug-21	04-Aug-21	1513072	✓	✓	Dustfall	Metals
Copper (Cu)-Total	L2612385-41	WCP1-DUSTFALL-6	MET-DUST(DM2)-MS-VA	0.00155	0.0000085	mg/dm2.day		02-Jul-21	00:00	03-Aug-21	04-Aug-21	1513072	×	✓	Dustfall	Metals
Iron (Fe)-Total	L2612385-41	WCP1-DUSTFALL-6	MET-DUST(DM2)-MS-VA	0.0176	0.00051	mg/dm2.day		02-Jul-21	00:00	03-Aug-21	04-Aug-21	1513072	✓	✓	Dustfall	Metals
Lead (Pb)-Total	L2612385-41	WCP1-DUSTFALL-6	MET-DUST(DM2)-MS-VA	0.0000460	0.00000085	mg/dm2.day		02-Jul-21	00:00	03-Aug-21	04-Aug-21	1513072	✓	✓	Dustfall	Metals
Lithium (Li)-Total	L2612385-41	WCP1-DUSTFALL-6	MET-DUST(DM2)-MS-VA	<0.000085	0.000085	mg/dm2.day		02-Jul-21	00:00	03-Aug-21	04-Aug-21	1513072	✓	✓	Dustfall	Metals
Magnesium (Mg)-Total	L2612385-41	WCP1-DUSTFALL-6	MET-DUST(DM2)-MS-VA	0.121	0.000085	mg/dm2.day		02-Jul-21	00:00	03-Aug-21	04-Aug-21	1513072	✓	✓	Dustfall	Metals
Manganese (Mn)-Total	L2612385-41	WCP1-DUSTFALL-6	MET-DUST(DM2)-MS-VA	0.00392	0.0000017	mg/dm2.day		02-Jul-21	00:00	03-Aug-21	04-Aug-21	1513072	✓	✓	Dustfall	Metals
Molybdenum (Mo)-Total	L2612385-41	WCP1-DUSTFALL-6	MET-DUST(DM2)-MS-VA	0.000114	0.00000085	mg/dm2.day		02-Jul-21	00:00	03-Aug-21	04-Aug-21	1513072	✓	✓	Dustfall	Metals
Nickel (Ni)-Total	L2612385-41	WCP1-DUSTFALL-6	MET-DUST(DM2)-MS-VA	0.000220	0.0000085	mg/dm2.day		02-Jul-21	00:00	03-Aug-21	04-Aug-21	1513072	✓	✓	Dustfall	Metals
Phosphorus (P)-Total	L2612385-41	WCP1-DUSTFALL-6	MET-DUST(DM2)-MS-VA	0.974	0.00085	mg/dm2.day		02-Jul-21	00:00	03-Aug-21	04-Aug-21	1513072	✓	✓	Dustfall	Metals
Potassium (K)-Total	L2612385-41	WCP1-DUSTFALL-6	MET-DUST(DM2)-MS-VA	1.51	0.00085	mg/dm2.day		02-Jul-21	00:00	03-Aug-21	04-Aug-21	1513072	✓	✓	Dustfall	Metals
Selenium (Se)-Total	L2612385-41	WCP1-DUSTFALL-6	MET-DUST(DM2)-MS-VA	0.000054	0.000017	mg/dm2.day		02-Jul-21	00:00	03-Aug-21	04-Aug-21	1513072	✓	✓	Dustfall	Metals
Silicon (Si)-Total	L2612385-41	WCP1-DUSTFALL-6	MET-DUST(DM2)-MS-VA	0.0210	0.00085	mg/dm2.day		02-Jul-21	00:00	03-Aug-21	04-Aug-21	1513072	✓	✓	Dustfall	Metals
Silver (Ag)-Total	L2612385-41	WCP1-DUSTFALL-6	MET-DUST(DM2)-MS-VA	0.00000273	0.00000017	mg/dm2.day		02-Jul-21	00:00	03-Aug-21	04-Aug-21	1513072	✓	✓	Dustfall	Metals
Sodium (Na)-Total	L2612385-41	WCP1-DUSTFALL-6	MET-DUST(DM2)-MS-VA	0.0792	0.00085	mg/dm2.day		02-Jul-21	00:00	03-Aug-21	04-Aug-21	1513072	✓	✓	Dustfall	Metals
Strontium (Sr)-Total	L2612385-41	WCP1-DUSTFALL-6	MET-DUST(DM2)-MS-VA	0.000508	0.0000017	mg/dm2.day		02-Jul-21	00:00	03-Aug-21	04-Aug-21	1513072	✓	✓	Dustfall	Metals
Thallium (Tl)-Total	L2612385-41	WCP1-DUSTFALL-6	MET-DUST(DM2)-MS-VA	<0.0000017	0.0000017	mg/dm2.day		02-Jul-21	00:00	03-Aug-21	04-Aug-21	1513072	✓	✓	Dustfall	Metals
Tin (Sn)-Total	L2612385-41	WCP1-DUSTFALL-6	MET-DUST(DM2)-MS-VA	<0.0000017	0.0000017	mg/dm2.day		02-Jul-21	00:00	03-Aug-21	04-Aug-21	1513072	✓	✓	Dustfall	Metals
Titanium (Ti)-Total	L2612385-41	WCP1-DUSTFALL-6	MET-DUST(DM2)-MS-VA	0.00020	0.00017	mg/dm2.day		02-Jul-21	00:00	03-Aug-21	04-Aug-21	1513072	✓	✓	Dustfall	Metals
Uranium (U)-Total	L2612385-41	WCP1-DUSTFALL-6	MET-DUST(DM2)-MS-VA	0.00000105	0.00000017	mg/dm2.day		02-Jul-21	00:00	03-Aug-21	04-Aug-21	1513072	✓	✓	Dustfall	Metals
Vanadium (V)-Total	L2612385-41	WCP1-DUSTFALL-6	MET-DUST(DM2)-MS-VA	0.000028	0.000017	mg/dm2.day		02-Jul-21	00:00	03-Aug-21	04-Aug-21	1513072	✓	✓	Dustfall	Metals
Zinc (Zn)-Total	L2612385-41	WCP1-DUSTFALL-6	MET-DUST(DM2)-MS-VA	0.00859	0.000051	mg/dm2.day		02-Jul-21	00:00	03-Aug-21	04-Aug-21	1513072	✓	✓	Dustfall	Metals
Particulates (Dustfall)																
Fixed Dustfall	L2612385-42	GH1-DUSTFALL-6	DUSTFALLS-ALL-DM2-VA	2.77	0.10	mg/dm2.day		02-Jul-21	00:00		03-Aug-21	1513811	✓	✓	Dustfall	Particulates
Volatile Dustfall	L2612385-42	GH1-DUSTFALL-6	DUSTFALLS-ALL-DM2-VA	5.93	0.10	mg/dm2.day		02-Jul-21	00:00		03-Aug-21	1513811	✓	✓	Dustfall	Particulates
Total Dustfall	L2612385-42	GH1-DUSTFALL-6	DUSTFALLS-ALL-DM2-VA	8.70	0.10	mg/dm2.day		02-Jul-21	00:00		03-Aug-21	1513811	✓	✓	Dustfall	Particulates
Fixed Insoluble Dustfall	L2612385-42	GH1-DUSTFALL-6	DUSTFALLS-ALL-DM2-VA	1.72	0.10	mg/dm2.day		02-Jul-21	00:00		03-Aug-21	1513811	✓	✓	Dustfall	Particulates
Volatile Insoluble Dustfall	L2612385-42	GH1-DUSTFALL-6	DUSTFALLS-ALL-DM2-VA	1.56	0.10	mg/dm2.day		02-Jul-21	00:00		03-Aug-21	1513811	✓	✓	Dustfall	Particulates
Total Insoluble Dustfall	L2612385-42	GH1-DUSTFALL-6	DUSTFALLS-ALL-DM2-VA	3.27	0.10	mg/dm2.day		02-Jul-21	00:00		03-Aug-21	1513811	✓	✓	Dustfall	Particulates
Fixed Soluble Dustfall	L2612385-42	GH1-DUSTFALL-6	DUSTFALLS-ALL-DM2-VA	1.06	0.10	mg/dm2.day		02-Jul-21	00:00		03-Aug-21	1513811	✓	✓	Dustfall	Particulates
Volatile Soluble Dustfall	L2612385-42	GH1-DUSTFALL-6	DUSTFALLS-ALL-DM2-VA	4.37	0.10	mg/dm2.day		02-Jul-21	00:00		03-Aug-21	1513811	✓	✓	Dustfall	Particulates
Total Soluble Dustfall	L2612385-42	GH1-DUSTFALL-6	DUSTFALLS-ALL-DM2-VA	5.43	0.10	mg/dm2.day		02-Jul-21	00:00		03-Aug-21	1513811	✓	✓	Dustfall	Particulates

Results of Analysis L2612385

Job Reference NEW GOLD RRP
Report To Sarah Flesher, New Gold Inc. Rainy River Project
Date Received 12-Jul-2021 10:00
Report Date 9-Aug-2021 14:35
Report Version 1

Parameter	ALS ID	Client Sample ID	ALS Test Code	Results	Detection Limit	Units	Qual	Date Sampled	Time Sampled	Prep Date	Analysis Date	QC Lot	QC Eval	Hold Time Eval	Matrix	Class
Metals (Dustfall)																
Aluminum (Al)-Total	L2612385-42	GH1-DUSTFALL-6	MET-DUST(DM2)-MS-VA	0.0133	0.000039	mg/dm2.day		02-Jul-21	00:00	03-Aug-21	04-Aug-21	1513072	✓	✓	Dustfall	Metals
Antimony (Sb)-Total	L2612385-42	GH1-DUSTFALL-6	MET-DUST(DM2)-MS-VA	0.0000022	0.0000013	mg/dm2.day		02-Jul-21	00:00	03-Aug-21	04-Aug-21	1513072	✓	✓	Dustfall	Metals
Arsenic (As)-Total	L2612385-42	GH1-DUSTFALL-6	MET-DUST(DM2)-MS-VA	0.0000200	0.0000013	mg/dm2.day		02-Jul-21	00:00	03-Aug-21	04-Aug-21	1513072	✓	✓	Dustfall	Metals
Barium (Ba)-Total	L2612385-42	GH1-DUSTFALL-6	MET-DUST(DM2)-MS-VA	0.000115	0.00000065	mg/dm2.day		02-Jul-21	00:00	03-Aug-21	04-Aug-21	1513072	×	✓	Dustfall	Metals
Beryllium (Be)-Total	L2612385-42	GH1-DUSTFALL-6	MET-DUST(DM2)-MS-VA	<0.0000065	0.0000065	mg/dm2.day		02-Jul-21	00:00	03-Aug-21	04-Aug-21	1513072	✓	✓	Dustfall	Metals
Bismuth (Bi)-Total	L2612385-42	GH1-DUSTFALL-6	MET-DUST(DM2)-MS-VA	<0.0000065	0.0000065	mg/dm2.day		02-Jul-21	00:00	03-Aug-21	04-Aug-21	1513072	✓	✓	Dustfall	Metals
Boron (B)-Total	L2612385-42	GH1-DUSTFALL-6	MET-DUST(DM2)-MS-VA	0.00015	0.00013	mg/dm2.day		02-Jul-21	00:00	03-Aug-21	04-Aug-21	1513072	✓	✓	Dustfall	Metals
Cadmium (Cd)-Total	L2612385-42	GH1-DUSTFALL-6	MET-DUST(DM2)-MS-VA	0.00000204	0.00000065	mg/dm2.day		02-Jul-21	00:00	03-Aug-21	04-Aug-21	1513072	✓	✓	Dustfall	Metals
Calcium (Ca)-Total	L2612385-42	GH1-DUSTFALL-6	MET-DUST(DM2)-MS-VA	0.102	0.00026	mg/dm2.day		02-Jul-21	00:00	03-Aug-21	04-Aug-21	1513072	✓	✓	Dustfall	Metals
Chromium (Cr)-Total	L2612385-42	GH1-DUSTFALL-6	MET-DUST(DM2)-MS-VA	0.0000344	0.0000065	mg/dm2.day		02-Jul-21	00:00	03-Aug-21	04-Aug-21	1513072	✓	✓	Dustfall	Metals
Cobalt (Co)-Total	L2612385-42	GH1-DUSTFALL-6	MET-DUST(DM2)-MS-VA	0.0000101	0.0000013	mg/dm2.day		02-Jul-21	00:00	03-Aug-21	04-Aug-21	1513072	✓	✓	Dustfall	Metals
Copper (Cu)-Total	L2612385-42	GH1-DUSTFALL-6	MET-DUST(DM2)-MS-VA	0.000167	0.0000065	mg/dm2.day		02-Jul-21	00:00	03-Aug-21	04-Aug-21	1513072	×	✓	Dustfall	Metals
Iron (Fe)-Total	L2612385-42	GH1-DUSTFALL-6	MET-DUST(DM2)-MS-VA	0.0150	0.00039	mg/dm2.day		02-Jul-21	00:00	03-Aug-21	04-Aug-21	1513072	✓	✓	Dustfall	Metals
Lead (Pb)-Total	L2612385-42	GH1-DUSTFALL-6	MET-DUST(DM2)-MS-VA	0.0000161	0.00000065	mg/dm2.day		02-Jul-21	00:00	03-Aug-21	04-Aug-21	1513072	✓	✓	Dustfall	Metals
Lithium (Li)-Total	L2612385-42	GH1-DUSTFALL-6	MET-DUST(DM2)-MS-VA	<0.000065	0.000065	mg/dm2.day		02-Jul-21	00:00	03-Aug-21	04-Aug-21	1513072	✓	✓	Dustfall	Metals
Magnesium (Mg)-Total	L2612385-42	GH1-DUSTFALL-6	MET-DUST(DM2)-MS-VA	0.0381	0.000065	mg/dm2.day		02-Jul-21	00:00	03-Aug-21	04-Aug-21	1513072	✓	✓	Dustfall	Metals
Manganese (Mn)-Total	L2612385-42	GH1-DUSTFALL-6	MET-DUST(DM2)-MS-VA	0.00130	0.0000013	mg/dm2.day		02-Jul-21	00:00	03-Aug-21	04-Aug-21	1513072	✓	✓	Dustfall	Metals
Molybdenum (Mo)-Total	L2612385-42	GH1-DUSTFALL-6	MET-DUST(DM2)-MS-VA	0.0000201	0.00000065	mg/dm2.day		02-Jul-21	00:00	03-Aug-21	04-Aug-21	1513072	✓	✓	Dustfall	Metals
Nickel (Ni)-Total	L2612385-42	GH1-DUSTFALL-6	MET-DUST(DM2)-MS-VA	0.0000459	0.0000065	mg/dm2.day		02-Jul-21	00:00	03-Aug-21	04-Aug-21	1513072	✓	✓	Dustfall	Metals
Phosphorus (P)-Total	L2612385-42	GH1-DUSTFALL-6	MET-DUST(DM2)-MS-VA	0.124	0.00065	mg/dm2.day		02-Jul-21	00:00	03-Aug-21	04-Aug-21	1513072	✓	✓	Dustfall	Metals
Potassium (K)-Total	L2612385-42	GH1-DUSTFALL-6	MET-DUST(DM2)-MS-VA	0.214	0.00065	mg/dm2.day		02-Jul-21	00:00	03-Aug-21	04-Aug-21	1513072	✓	✓	Dustfall	Metals
Selenium (Se)-Total	L2612385-42	GH1-DUSTFALL-6	MET-DUST(DM2)-MS-VA	<0.000013	0.000013	mg/dm2.day		02-Jul-21	00:00	03-Aug-21	04-Aug-21	1513072	✓	✓	Dustfall	Metals
Silicon (Si)-Total	L2612385-42	GH1-DUSTFALL-6	MET-DUST(DM2)-MS-VA	0.0198	0.00065	mg/dm2.day		02-Jul-21	00:00	03-Aug-21	04-Aug-21	1513072	✓	✓	Dustfall	Metals
Silver (Ag)-Total	L2612385-42	GH1-DUSTFALL-6	MET-DUST(DM2)-MS-VA	0.00000056	0.00000013	mg/dm2.day		02-Jul-21	00:00	03-Aug-21	04-Aug-21	1513072	✓	✓	Dustfall	Metals
Sodium (Na)-Total	L2612385-42	GH1-DUSTFALL-6	MET-DUST(DM2)-MS-VA	0.0106	0.00065	mg/dm2.day		02-Jul-21	00:00	03-Aug-21	04-Aug-21	1513072	✓	✓	Dustfall	Metals
Strontium (Sr)-Total	L2612385-42	GH1-DUSTFALL-6	MET-DUST(DM2)-MS-VA	0.000249	0.0000013	mg/dm2.day		02-Jul-21	00:00	03-Aug-21	04-Aug-21	1513072	✓	✓	Dustfall	Metals
Thallium (Tl)-Total	L2612385-42	GH1-DUSTFALL-6	MET-DUST(DM2)-MS-VA	<0.0000013	0.0000013	mg/dm2.day		02-Jul-21	00:00	03-Aug-21	04-Aug-21	1513072	✓	✓	Dustfall	Metals
Tin (Sn)-Total	L2612385-42	GH1-DUSTFALL-6	MET-DUST(DM2)-MS-VA	<0.0000013	0.0000013	mg/dm2.day		02-Jul-21	00:00	03-Aug-21	04-Aug-21	1513072	✓	✓	Dustfall	Metals
Titanium (Ti)-Total	L2612385-42	GH1-DUSTFALL-6	MET-DUST(DM2)-MS-VA	<0.00039	0.00039	mg/dm2.day	DLM	02-Jul-21	00:00	03-Aug-21	04-Aug-21	1513072	✓	✓	Dustfall	Metals
Uranium (U)-Total	L2612385-42	GH1-DUSTFALL-6	MET-DUST(DM2)-MS-VA	0.00000075	0.00000013	mg/dm2.day		02-Jul-21	00:00	03-Aug-21	04-Aug-21	1513072	✓	✓	Dustfall	Metals
Vanadium (V)-Total	L2612385-42	GH1-DUSTFALL-6	MET-DUST(DM2)-MS-VA	0.000031	0.000013	mg/dm2.day		02-Jul-21	00:00	03-Aug-21	04-Aug-21	1513072	✓	✓	Dustfall	Metals
Zinc (Zn)-Total	L2612385-42	GH1-DUSTFALL-6	MET-DUST(DM2)-MS-VA	0.000983	0.000039	mg/dm2.day		02-Jul-21	00:00	03-Aug-21	04-Aug-21	1513072	✓	✓	Dustfall	Metals
Particulates (Dustfall)																
Fixed Dustfall	L2612385-43	SPP1-DUSTFALL-25	DUSTFALLS-ALL-DM2-VA	4.87	0.21	mg/dm2.day		09-Jun-21	00:00		03-Aug-21	1513811	✓	✓	Dustfall	Particulates
Volatile Dustfall	L2612385-43	SPP1-DUSTFALL-25	DUSTFALLS-ALL-DM2-VA	8.17	0.21	mg/dm2.day		09-Jun-21	00:00		03-Aug-21	1513811	✓	✓	Dustfall	Particulates
Total Dustfall	L2612385-43	SPP1-DUSTFALL-25	DUSTFALLS-ALL-DM2-VA	13.0	0.21	mg/dm2.day		09-Jun-21	00:00		03-Aug-21	1513811	✓	✓	Dustfall	Particulates
Fixed Insoluble Dustfall	L2612385-43	SPP1-DUSTFALL-25	DUSTFALLS-ALL-DM2-VA	3.40	0.21	mg/dm2.day		09-Jun-21	00:00		03-Aug-21	1513811	✓	✓	Dustfall	Particulates
Volatile Insoluble Dustfall	L2612385-43	SPP1-DUSTFALL-25	DUSTFALLS-ALL-DM2-VA	3.00	0.21	mg/dm2.day		09-Jun-21	00:00		03-Aug-21	1513811	✓	✓	Dustfall	Particulates
Total Insoluble Dustfall	L2612385-43	SPP1-DUSTFALL-25	DUSTFALLS-ALL-DM2-VA	6.41	0.21	mg/dm2.day		09-Jun-21	00:00		03-Aug-21	1513811	✓	✓	Dustfall	Particulates
Fixed Soluble Dustfall	L2612385-43	SPP1-DUSTFALL-25	DUSTFALLS-ALL-DM2-VA	1.47	0.21	mg/dm2.day		09-Jun-21	00:00		03-Aug-21	1513811	✓	✓	Dustfall	Particulates
Volatile Soluble Dustfall	L2612385-43	SPP1-DUSTFALL-25	DUSTFALLS-ALL-DM2-VA	5.17	0.21	mg/dm2.day		09-Jun-21	00:00		03-Aug-21	1513811	✓	✓	Dustfall	Particulates
Total Soluble Dustfall	L2612385-43	SPP1-DUSTFALL-25	DUSTFALLS-ALL-DM2-VA	6.63	0.21	mg/dm2.day		09-Jun-21	00:00		03-Aug-21	1513811	✓	✓	Dustfall	Particulates
Metals (Dustfall)																
Aluminum (Al)-Total	L2612385-43	SPP1-DUSTFALL-25	MET-DUST(DM2)-MS-VA	0.0149	0.000097	mg/dm2.day		09-Jun-21	00:00	03-Aug-21	04-Aug-21	1513072	✓	✓	Dustfall	Metals
Antimony (Sb)-Total	L2612385-43	SPP1-DUSTFALL-25	MET-DUST(DM2)-MS-VA	0.0000046	0.0000032	mg/dm2.day		09-Jun-21	00:00	03-Aug-21	04-Aug-21	1513072	✓	✓	Dustfall	Metals
Arsenic (As)-Total	L2612385-43	SPP1-DUSTFALL-25	MET-DUST(DM2)-MS-VA	0.0000256	0.0000032	mg/dm2.day		09-Jun-21	00:00	03-Aug-21	04-Aug-21	1513072	✓	✓	Dustfall	Metals
Barium (Ba)-Total	L2612385-43	SPP1-DUSTFALL-25	MET-DUST(DM2)-MS-VA	0.000244	0.0000016	mg/dm2.day		09-Jun-21	00:00	03-Aug-21	04-Aug-21	1513072	×	✓	Dustfall	Metals
Beryllium (Be)-Total	L2612385-43	SPP1-DUSTFALL-25	MET-DUST(DM2)-MS-VA	<0.000016	0.000016	mg/dm2.day		09-Jun-21	00:00	03-Aug-21	04-Aug-21	1513072	✓	✓	Dustfall	Metals
Bismuth (Bi)-Total	L2612385-43	SPP1-DUSTFALL-25	MET-DUST(DM2)-MS-VA	<0.000016	0.000016	mg/dm2.day		09-Jun-21	00:00	03-Aug-21	04-Aug-21	1513072	✓	✓	Dustfall	Metals
Boron (B)-Total	L2612385-43	SPP1-DUSTFALL-25	MET-DUST(DM2)-MS-VA	<0.00032	0.00032	mg/dm2.day		09-Jun-21	00:00	03-Aug-21	04-Aug-21	1513072	✓	✓	Dustfall	Metals
Cadmium (Cd)-Total	L2612385-43	SPP1-DUSTFALL-25	MET-DUST(DM2)-MS-VA	0.0000094	0.0000016	mg/dm2.day		09-Jun-21	00:00	03-Aug-21	04-Aug-21	1513072	✓	✓	Dustfall	Metals
Calcium (Ca)-Total	L2612385-43	SPP1-DUSTFALL-25	MET-DUST(DM2)-MS-VA	0.139	0.00064	mg/dm2.day		09-Jun-21	00:00	03-Aug-21	04-Aug-21	1513072	✓	✓	Dustfall	Metals
Chromium (Cr)-Total	L2612385-43	SPP1-DUSTFALL-25	MET-DUST(DM2)-MS-VA	0.000100	0.000016	mg/dm2.day		09-Jun-21	00:00	03-Aug-21	04-Aug-21	1513072	✓	✓	Dustfall	Metals
Cobalt (Co)-Total	L2612385-43	SPP1-DUSTFALL-25	MET-DUST(DM2)-MS-VA	0.0000124	0.0000032	mg/dm2.day		09-Jun-21	00:00	03-Aug-21	04-Aug-21	1513072	✓	✓	Dustfall	Metals
Copper (Cu)-Total	L2612385-43	SPP1-DUSTFALL-25	MET-DUST(DM2)-MS-VA	0.000442	0.000016	mg/dm2.day		09-Jun-21	00:00	03-Aug-21	04-Aug-21	1513072	×	✓	Dustfall	Metals
Iron (Fe)-Total	L2612385-43	SPP1-DUSTFALL-25	MET-DUST(DM2)-MS-VA	0.0166	0.00097	mg/dm2.day		09-Jun-21	00:00	03-Aug-21	04-Aug-21	1513072	✓	✓	Dustfall	Metals
Lead (Pb)-Total	L2612385-43	SPP1-DUSTFALL-25	MET-DUST(DM2)-MS-VA	0.000137	0.0000016	mg/dm2.day		09-Jun-21	00:00	03-Aug-21	04-Aug-21	1513072	✓	✓	Dustfall	Metals
Lithium (Li)-Total	L2612385-43	SPP1-DUSTFALL-25	MET-DUST(DM2)-MS-VA	<0.00016	0.00016	mg/dm2.day		09-Jun-21	00:00	03-Aug-21	04-Aug-21	1513072	✓	✓	Dustfall	Metals
Magnesium (Mg)-Total	L2612385-43	SPP1-DUSTFALL-25	MET-DUST(DM2)-MS-VA	0.0345	0.00016	mg/dm2.day		09-Jun-21	00:00	03-Aug-21	04-Aug-21	1513072	✓	✓	Dustfall	Metals

Results of Analysis L2612385

Job Reference NEW GOLD RRP
Report To Sarah Flesher, New Gold Inc. Rainy River Project
Date Received 12-Jul-2021 10:00
Report Date 9-Aug-2021 14:35
Report Version 1

Parameter	ALS ID	Client Sample ID	ALS Test Code	Results	Detection Limit	Units	Qual	Date Sampled	Time Sampled	Prep Date	Analysis Date	QC Lot	QC Eval	Hold Time Eval	Matrix	Class
Manganese (Mn)-Total	L2612385-43	SPP1-DUSTFALL-25	MET-DUST(DM2)-MS-VA	0.00191	0.0000032	mg/dm2.day		09-Jun-21	00:00	03-Aug-21	04-Aug-21	1513072	✓	✓	Dustfall	Metals
Molybdenum (Mo)-Total	L2612385-43	SPP1-DUSTFALL-25	MET-DUST(DM2)-MS-VA	0.0000287	0.0000016	mg/dm2.day		09-Jun-21	00:00	03-Aug-21	04-Aug-21	1513072	✓	✓	Dustfall	Metals
Nickel (Ni)-Total	L2612385-43	SPP1-DUSTFALL-25	MET-DUST(DM2)-MS-VA	0.000061	0.000016	mg/dm2.day		09-Jun-21	00:00	03-Aug-21	04-Aug-21	1513072	✓	✓	Dustfall	Metals
Phosphorus (P)-Total	L2612385-43	SPP1-DUSTFALL-25	MET-DUST(DM2)-MS-VA	0.143	0.0016	mg/dm2.day		09-Jun-21	00:00	03-Aug-21	04-Aug-21	1513072	✓	✓	Dustfall	Metals
Potassium (K)-Total	L2612385-43	SPP1-DUSTFALL-25	MET-DUST(DM2)-MS-VA	0.294	0.0016	mg/dm2.day		09-Jun-21	00:00	03-Aug-21	04-Aug-21	1513072	✓	✓	Dustfall	Metals
Selenium (Se)-Total	L2612385-43	SPP1-DUSTFALL-25	MET-DUST(DM2)-MS-VA	<0.000032	0.000032	mg/dm2.day		09-Jun-21	00:00	03-Aug-21	04-Aug-21	1513072	✓	✓	Dustfall	Metals
Silicon (Si)-Total	L2612385-43	SPP1-DUSTFALL-25	MET-DUST(DM2)-MS-VA	0.0229	0.0016	mg/dm2.day		09-Jun-21	00:00	03-Aug-21	04-Aug-21	1513072	✓	✓	Dustfall	Metals
Silver (Ag)-Total	L2612385-43	SPP1-DUSTFALL-25	MET-DUST(DM2)-MS-VA	0.00000226	0.00000032	mg/dm2.day		09-Jun-21	00:00	03-Aug-21	04-Aug-21	1513072	✓	✓	Dustfall	Metals
Sodium (Na)-Total	L2612385-43	SPP1-DUSTFALL-25	MET-DUST(DM2)-MS-VA	0.0242	0.0016	mg/dm2.day		09-Jun-21	00:00	03-Aug-21	04-Aug-21	1513072	✓	✓	Dustfall	Metals
Strontium (Sr)-Total	L2612385-43	SPP1-DUSTFALL-25	MET-DUST(DM2)-MS-VA	0.000238	0.0000032	mg/dm2.day		09-Jun-21	00:00	03-Aug-21	04-Aug-21	1513072	✓	✓	Dustfall	Metals
Thallium (Tl)-Total	L2612385-43	SPP1-DUSTFALL-25	MET-DUST(DM2)-MS-VA	<0.0000032	0.0000032	mg/dm2.day		09-Jun-21	00:00	03-Aug-21	04-Aug-21	1513072	✓	✓	Dustfall	Metals
Tin (Sn)-Total	L2612385-43	SPP1-DUSTFALL-25	MET-DUST(DM2)-MS-VA	<0.0000032	0.0000032	mg/dm2.day		09-Jun-21	00:00	03-Aug-21	04-Aug-21	1513072	✓	✓	Dustfall	Metals
Titanium (Ti)-Total	L2612385-43	SPP1-DUSTFALL-25	MET-DUST(DM2)-MS-VA	<0.00032	0.00032	mg/dm2.day		09-Jun-21	00:00	03-Aug-21	04-Aug-21	1513072	✓	✓	Dustfall	Metals
Uranium (U)-Total	L2612385-43	SPP1-DUSTFALL-25	MET-DUST(DM2)-MS-VA	0.00000106	0.00000032	mg/dm2.day		09-Jun-21	00:00	03-Aug-21	04-Aug-21	1513072	✓	✓	Dustfall	Metals
Vanadium (V)-Total	L2612385-43	SPP1-DUSTFALL-25	MET-DUST(DM2)-MS-VA	0.000035	0.000032	mg/dm2.day		09-Jun-21	00:00	03-Aug-21	04-Aug-21	1513072	✓	✓	Dustfall	Metals
Zinc (Zn)-Total	L2612385-43	SPP1-DUSTFALL-25	MET-DUST(DM2)-MS-VA	0.00292	0.000097	mg/dm2.day		09-Jun-21	00:00	03-Aug-21	04-Aug-21	1513072	✓	✓	Dustfall	Metals
Particulates (Dustfall)																
Fixed Dustfall	L2612385-44	SPP1-DUSTFALL-26	DUSTFALLS-ALL-DM2-VA	17.7	0.43	mg/dm2.day		16-Jun-21	00:00		03-Aug-21	1513811	✓	✓	Dustfall	Particulates
Volatile Dustfall	L2612385-44	SPP1-DUSTFALL-26	DUSTFALLS-ALL-DM2-VA	40.4	0.43	mg/dm2.day		16-Jun-21	00:00		03-Aug-21	1513811	✓	✓	Dustfall	Particulates
Total Dustfall	L2612385-44	SPP1-DUSTFALL-26	DUSTFALLS-ALL-DM2-VA	58.1	0.43	mg/dm2.day		16-Jun-21	00:00		03-Aug-21	1513811	✓	✓	Dustfall	Particulates
Fixed Insoluble Dustfall	L2612385-44	SPP1-DUSTFALL-26	DUSTFALLS-ALL-DM2-VA	10.7	0.43	mg/dm2.day		16-Jun-21	00:00		03-Aug-21	1513811	✓	✓	Dustfall	Particulates
Volatile Insoluble Dustfall	L2612385-44	SPP1-DUSTFALL-26	DUSTFALLS-ALL-DM2-VA	22.7	0.43	mg/dm2.day		16-Jun-21	00:00		03-Aug-21	1513811	✓	✓	Dustfall	Particulates
Total Insoluble Dustfall	L2612385-44	SPP1-DUSTFALL-26	DUSTFALLS-ALL-DM2-VA	33.4	0.43	mg/dm2.day		16-Jun-21	00:00		03-Aug-21	1513811	✓	✓	Dustfall	Particulates
Fixed Soluble Dustfall	L2612385-44	SPP1-DUSTFALL-26	DUSTFALLS-ALL-DM2-VA	6.95	0.43	mg/dm2.day		16-Jun-21	00:00		03-Aug-21	1513811	✓	✓	Dustfall	Particulates
Volatile Soluble Dustfall	L2612385-44	SPP1-DUSTFALL-26	DUSTFALLS-ALL-DM2-VA	17.7	0.43	mg/dm2.day		16-Jun-21	00:00		03-Aug-21	1513811	✓	✓	Dustfall	Particulates
Total Soluble Dustfall	L2612385-44	SPP1-DUSTFALL-26	DUSTFALLS-ALL-DM2-VA	24.7	0.43	mg/dm2.day		16-Jun-21	00:00		03-Aug-21	1513811	✓	✓	Dustfall	Particulates
Metals (Dustfall)																
Aluminum (Al)-Total	L2612385-44	SPP1-DUSTFALL-26	MET-DUST(DM2)-MS-VA	0.0556	0.00019	mg/dm2.day		16-Jun-21	00:00	03-Aug-21	04-Aug-21	1513072	✓	✓	Dustfall	Metals
Antimony (Sb)-Total	L2612385-44	SPP1-DUSTFALL-26	MET-DUST(DM2)-MS-VA	0.0000209	0.0000062	mg/dm2.day		16-Jun-21	00:00	03-Aug-21	04-Aug-21	1513072	✓	✓	Dustfall	Metals
Arsenic (As)-Total	L2612385-44	SPP1-DUSTFALL-26	MET-DUST(DM2)-MS-VA	0.000157	0.0000062	mg/dm2.day		16-Jun-21	00:00	03-Aug-21	04-Aug-21	1513072	✓	✓	Dustfall	Metals
Barium (Ba)-Total	L2612385-44	SPP1-DUSTFALL-26	MET-DUST(DM2)-MS-VA	0.00146	0.0000031	mg/dm2.day		16-Jun-21	00:00	03-Aug-21	04-Aug-21	1513072	×	✓	Dustfall	Metals
Beryllium (Be)-Total	L2612385-44	SPP1-DUSTFALL-26	MET-DUST(DM2)-MS-VA	<0.000031	0.000031	mg/dm2.day		16-Jun-21	00:00	03-Aug-21	04-Aug-21	1513072	✓	✓	Dustfall	Metals
Bismuth (Bi)-Total	L2612385-44	SPP1-DUSTFALL-26	MET-DUST(DM2)-MS-VA	<0.000031	0.000031	mg/dm2.day		16-Jun-21	00:00	03-Aug-21	04-Aug-21	1513072	✓	✓	Dustfall	Metals
Boron (B)-Total	L2612385-44	SPP1-DUSTFALL-26	MET-DUST(DM2)-MS-VA	0.00067	0.00062	mg/dm2.day		16-Jun-21	00:00	03-Aug-21	04-Aug-21	1513072	✓	✓	Dustfall	Metals
Cadmium (Cd)-Total	L2612385-44	SPP1-DUSTFALL-26	MET-DUST(DM2)-MS-VA	0.0000275	0.0000031	mg/dm2.day		16-Jun-21	00:00	03-Aug-21	04-Aug-21	1513072	✓	✓	Dustfall	Metals
Calcium (Ca)-Total	L2612385-44	SPP1-DUSTFALL-26	MET-DUST(DM2)-MS-VA	0.925	0.0012	mg/dm2.day		16-Jun-21	00:00	03-Aug-21	04-Aug-21	1513072	✓	✓	Dustfall	Metals
Chromium (Cr)-Total	L2612385-44	SPP1-DUSTFALL-26	MET-DUST(DM2)-MS-VA	0.000176	0.000031	mg/dm2.day		16-Jun-21	00:00	03-Aug-21	04-Aug-21	1513072	✓	✓	Dustfall	Metals
Cobalt (Co)-Total	L2612385-44	SPP1-DUSTFALL-26	MET-DUST(DM2)-MS-VA	0.0000248	0.0000062	mg/dm2.day		16-Jun-21	00:00	03-Aug-21	04-Aug-21	1513072	✓	✓	Dustfall	Metals
Copper (Cu)-Total	L2612385-44	SPP1-DUSTFALL-26	MET-DUST(DM2)-MS-VA	0.00337	0.000031	mg/dm2.day		16-Jun-21	00:00	03-Aug-21	04-Aug-21	1513072	×	✓	Dustfall	Metals
Iron (Fe)-Total	L2612385-44	SPP1-DUSTFALL-26	MET-DUST(DM2)-MS-VA	0.0599	0.0019	mg/dm2.day		16-Jun-21	00:00	03-Aug-21	04-Aug-21	1513072	✓	✓	Dustfall	Metals
Lead (Pb)-Total	L2612385-44	SPP1-DUSTFALL-26	MET-DUST(DM2)-MS-VA	0.00126	0.0000031	mg/dm2.day		16-Jun-21	00:00	03-Aug-21	04-Aug-21	1513072	✓	✓	Dustfall	Metals
Lithium (Li)-Total	L2612385-44	SPP1-DUSTFALL-26	MET-DUST(DM2)-MS-VA	<0.00031	0.00031	mg/dm2.day		16-Jun-21	00:00	03-Aug-21	04-Aug-21	1513072	✓	✓	Dustfall	Metals
Magnesium (Mg)-Total	L2612385-44	SPP1-DUSTFALL-26	MET-DUST(DM2)-MS-VA	0.329	0.00031	mg/dm2.day		16-Jun-21	00:00	03-Aug-21	04-Aug-21	1513072	✓	✓	Dustfall	Metals
Manganese (Mn)-Total	L2612385-44	SPP1-DUSTFALL-26	MET-DUST(DM2)-MS-VA	0.00862	0.0000062	mg/dm2.day		16-Jun-21	00:00	03-Aug-21	04-Aug-21	1513072	✓	✓	Dustfall	Metals
Molybdenum (Mo)-Total	L2612385-44	SPP1-DUSTFALL-26	MET-DUST(DM2)-MS-VA	0.000316	0.0000031	mg/dm2.day		16-Jun-21	00:00	03-Aug-21	04-Aug-21	1513072	✓	✓	Dustfall	Metals
Nickel (Ni)-Total	L2612385-44	SPP1-DUSTFALL-26	MET-DUST(DM2)-MS-VA	0.000211	0.000031	mg/dm2.day		16-Jun-21	00:00	03-Aug-21	04-Aug-21	1513072	✓	✓	Dustfall	Metals
Phosphorus (P)-Total	L2612385-44	SPP1-DUSTFALL-26	MET-DUST(DM2)-MS-VA	1.37	0.0031	mg/dm2.day		16-Jun-21	00:00	03-Aug-21	04-Aug-21	1513072	✓	✓	Dustfall	Metals
Potassium (K)-Total	L2612385-44	SPP1-DUSTFALL-26	MET-DUST(DM2)-MS-VA	2.48	0.0031	mg/dm2.day		16-Jun-21	00:00	03-Aug-21	04-Aug-21	1513072	✓	✓	Dustfall	Metals
Selenium (Se)-Total	L2612385-44	SPP1-DUSTFALL-26	MET-DUST(DM2)-MS-VA	0.000093	0.000062	mg/dm2.day		16-Jun-21	00:00	03-Aug-21	04-Aug-21	1513072	✓	✓	Dustfall	Metals
Silicon (Si)-Total	L2612385-44	SPP1-DUSTFALL-26	MET-DUST(DM2)-MS-VA	0.175	0.0031	mg/dm2.day		16-Jun-21	00:00	03-Aug-21	04-Aug-21	1513072	✓	✓	Dustfall	Metals
Silver (Ag)-Total	L2612385-44	SPP1-DUSTFALL-26	MET-DUST(DM2)-MS-VA	0.0000293	0.00000062	mg/dm2.day		16-Jun-21	00:00	03-Aug-21	04-Aug-21	1513072	✓	✓	Dustfall	Metals
Sodium (Na)-Total	L2612385-44	SPP1-DUSTFALL-26	MET-DUST(DM2)-MS-VA	0.0782	0.0031	mg/dm2.day		16-Jun-21	00:00	03-Aug-21	04-Aug-21	1513072	✓	✓	Dustfall	Metals
Strontium (Sr)-Total	L2612385-44	SPP1-DUSTFALL-26	MET-DUST(DM2)-MS-VA	0.00123	0.0000062	mg/dm2.day		16-Jun-21	00:00	03-Aug-21	04-Aug-21	1513072	✓	✓	Dustfall	Metals
Thallium (Tl)-Total	L2612385-44	SPP1-DUSTFALL-26	MET-DUST(DM2)-MS-VA	<0.0000062	0.0000062	mg/dm2.day		16-Jun-21	00:00	03-Aug-21	04-Aug-21	1513072	✓	✓	Dustfall	Metals
Tin (Sn)-Total	L2612385-44	SPP1-DUSTFALL-26	MET-DUST(DM2)-MS-VA	<0.0000062	0.0000062	mg/dm2.day		16-Jun-21	00:00	03-Aug-21	04-Aug-21	1513072	✓	✓	Dustfall	Metals
Titanium (Ti)-Total	L2612385-44	SPP1-DUSTFALL-26	MET-DUST(DM2)-MS-VA	0.00075	0.00062	mg/dm2.day		16-Jun-21	00:00	03-Aug-21	04-Aug-21	1513072	✓	✓	Dustfall	Metals
Uranium (U)-Total	L2612385-44	SPP1-DUSTFALL-26	MET-DUST(DM2)-MS-VA	0.00000247	0.00000062	mg/dm2.day		16-Jun-21	00:00	03-Aug-21	04-Aug-21	1513072	✓	✓	Dustfall	Metals
Vanadium (V)-Total	L2612385-44	SPP1-DUSTFALL-26	MET-DUST(DM2)-MS-VA	0.000084	0.000062	mg/dm2.day		16-Jun-21	00:00	03-Aug-21	04-Aug-21	1513072	✓	✓	Dustfall	Metals
Zinc (Zn)-Total	L2612385-44	SPP1-DUSTFALL-26	MET-DUST(DM2)-MS-VA	0.0212	0.00019	mg/dm2.day		16-Jun-21	00:00	03-Aug-21	04-Aug-21	1513072	✓	✓	Dustfall	Metals

Results of Analysis L2612385

Job Reference NEW GOLD RRP
Report To Sarah Flesher, New Gold Inc. Rainy River Project
Date Received 12-Jul-2021 10:00
Report Date 9-Aug-2021 14:35
Report Version 1

Parameter	ALS ID	Client Sample ID	ALS Test Code	Results	Detection Limit	Units	Qual	Date Sampled	Time Sampled	Prep Date	Analysis Date	QC Lot	QC Eval	Hold Time Eval	Matrix	Class
Particulates (Dustfall)																
Fixed Dustfall	L2612385-45	SPP1-DUSTFALL-27	DUSTFALLS-ALL-DM2-VA	18.8	0.43	mg/dm2.day		23-Jun-21	00:00		03-Aug-21	1513811	✓	✓	Dustfall	Particulates
Volatile Dustfall	L2612385-45	SPP1-DUSTFALL-27	DUSTFALLS-ALL-DM2-VA	38.1	0.43	mg/dm2.day		23-Jun-21	00:00		03-Aug-21	1513811	✓	✓	Dustfall	Particulates
Total Dustfall	L2612385-45	SPP1-DUSTFALL-27	DUSTFALLS-ALL-DM2-VA	56.9	0.43	mg/dm2.day		23-Jun-21	00:00		03-Aug-21	1513811	✓	✓	Dustfall	Particulates
Fixed Insoluble Dustfall	L2612385-45	SPP1-DUSTFALL-27	DUSTFALLS-ALL-DM2-VA	9.59	0.43	mg/dm2.day		23-Jun-21	00:00		03-Aug-21	1513811	✓	✓	Dustfall	Particulates
Volatile Insoluble Dustfall	L2612385-45	SPP1-DUSTFALL-27	DUSTFALLS-ALL-DM2-VA	10.9	0.43	mg/dm2.day		23-Jun-21	00:00		03-Aug-21	1513811	✓	✓	Dustfall	Particulates
Total Insoluble Dustfall	L2612385-45	SPP1-DUSTFALL-27	DUSTFALLS-ALL-DM2-VA	20.5	0.43	mg/dm2.day		23-Jun-21	00:00		03-Aug-21	1513811	✓	✓	Dustfall	Particulates
Fixed Soluble Dustfall	L2612385-45	SPP1-DUSTFALL-27	DUSTFALLS-ALL-DM2-VA	9.20	0.43	mg/dm2.day		23-Jun-21	00:00		03-Aug-21	1513811	✓	✓	Dustfall	Particulates
Volatile Soluble Dustfall	L2612385-45	SPP1-DUSTFALL-27	DUSTFALLS-ALL-DM2-VA	27.2	0.43	mg/dm2.day		23-Jun-21	00:00		03-Aug-21	1513811	✓	✓	Dustfall	Particulates
Total Soluble Dustfall	L2612385-45	SPP1-DUSTFALL-27	DUSTFALLS-ALL-DM2-VA	36.4	0.43	mg/dm2.day		23-Jun-21	00:00		03-Aug-21	1513811	✓	✓	Dustfall	Particulates
Metals (Dustfall)																
Aluminum (Al)-Total	L2612385-45	SPP1-DUSTFALL-27	MET-DUST(DM2)-MS-VA	0.0654	0.00019	mg/dm2.day		23-Jun-21	00:00	03-Aug-21	04-Aug-21	1513072	✓	✓	Dustfall	Metals
Antimony (Sb)-Total	L2612385-45	SPP1-DUSTFALL-27	MET-DUST(DM2)-MS-VA	0.0000313	0.0000064	mg/dm2.day		23-Jun-21	00:00	03-Aug-21	04-Aug-21	1513072	✓	✓	Dustfall	Metals
Arsenic (As)-Total	L2612385-45	SPP1-DUSTFALL-27	MET-DUST(DM2)-MS-VA	0.0000873	0.0000064	mg/dm2.day		23-Jun-21	00:00	03-Aug-21	04-Aug-21	1513072	✓	✓	Dustfall	Metals
Barium (Ba)-Total	L2612385-45	SPP1-DUSTFALL-27	MET-DUST(DM2)-MS-VA	0.000877	0.0000032	mg/dm2.day		23-Jun-21	00:00	03-Aug-21	04-Aug-21	1513072	×	✓	Dustfall	Metals
Beryllium (Be)-Total	L2612385-45	SPP1-DUSTFALL-27	MET-DUST(DM2)-MS-VA	<0.000032	0.000032	mg/dm2.day		23-Jun-21	00:00	03-Aug-21	04-Aug-21	1513072	✓	✓	Dustfall	Metals
Bismuth (Bi)-Total	L2612385-45	SPP1-DUSTFALL-27	MET-DUST(DM2)-MS-VA	<0.000032	0.000032	mg/dm2.day		23-Jun-21	00:00	03-Aug-21	04-Aug-21	1513072	✓	✓	Dustfall	Metals
Boron (B)-Total	L2612385-45	SPP1-DUSTFALL-27	MET-DUST(DM2)-MS-VA	0.00085	0.00064	mg/dm2.day		23-Jun-21	00:00	03-Aug-21	04-Aug-21	1513072	✓	✓	Dustfall	Metals
Cadmium (Cd)-Total	L2612385-45	SPP1-DUSTFALL-27	MET-DUST(DM2)-MS-VA	0.0000156	0.0000032	mg/dm2.day		23-Jun-21	00:00	03-Aug-21	04-Aug-21	1513072	✓	✓	Dustfall	Metals
Calcium (Ca)-Total	L2612385-45	SPP1-DUSTFALL-27	MET-DUST(DM2)-MS-VA	1.84	0.0013	mg/dm2.day		23-Jun-21	00:00	03-Aug-21	04-Aug-21	1513072	✓	✓	Dustfall	Metals
Chromium (Cr)-Total	L2612385-45	SPP1-DUSTFALL-27	MET-DUST(DM2)-MS-VA	0.000184	0.000032	mg/dm2.day		23-Jun-21	00:00	03-Aug-21	04-Aug-21	1513072	✓	✓	Dustfall	Metals
Cobalt (Co)-Total	L2612385-45	SPP1-DUSTFALL-27	MET-DUST(DM2)-MS-VA	0.0000332	0.0000064	mg/dm2.day		23-Jun-21	00:00	03-Aug-21	04-Aug-21	1513072	✓	✓	Dustfall	Metals
Copper (Cu)-Total	L2612385-45	SPP1-DUSTFALL-27	MET-DUST(DM2)-MS-VA	0.00141	0.000032	mg/dm2.day		23-Jun-21	00:00	03-Aug-21	04-Aug-21	1513072	×	✓	Dustfall	Metals
Iron (Fe)-Total	L2612385-45	SPP1-DUSTFALL-27	MET-DUST(DM2)-MS-VA	0.0623	0.0019	mg/dm2.day		23-Jun-21	00:00	03-Aug-21	04-Aug-21	1513072	✓	✓	Dustfall	Metals
Lead (Pb)-Total	L2612385-45	SPP1-DUSTFALL-27	MET-DUST(DM2)-MS-VA	0.00116	0.0000032	mg/dm2.day		23-Jun-21	00:00	03-Aug-21	04-Aug-21	1513072	✓	✓	Dustfall	Metals
Lithium (Li)-Total	L2612385-45	SPP1-DUSTFALL-27	MET-DUST(DM2)-MS-VA	<0.00032	0.00032	mg/dm2.day		23-Jun-21	00:00	03-Aug-21	04-Aug-21	1513072	✓	✓	Dustfall	Metals
Magnesium (Mg)-Total	L2612385-45	SPP1-DUSTFALL-27	MET-DUST(DM2)-MS-VA	0.212	0.00032	mg/dm2.day		23-Jun-21	00:00	03-Aug-21	04-Aug-21	1513072	✓	✓	Dustfall	Metals
Manganese (Mn)-Total	L2612385-45	SPP1-DUSTFALL-27	MET-DUST(DM2)-MS-VA	0.00523	0.0000064	mg/dm2.day		23-Jun-21	00:00	03-Aug-21	04-Aug-21	1513072	✓	✓	Dustfall	Metals
Molybdenum (Mo)-Total	L2612385-45	SPP1-DUSTFALL-27	MET-DUST(DM2)-MS-VA	0.000133	0.0000032	mg/dm2.day		23-Jun-21	00:00	03-Aug-21	04-Aug-21	1513072	✓	✓	Dustfall	Metals
Nickel (Ni)-Total	L2612385-45	SPP1-DUSTFALL-27	MET-DUST(DM2)-MS-VA	0.000217	0.000032	mg/dm2.day		23-Jun-21	00:00	03-Aug-21	04-Aug-21	1513072	✓	✓	Dustfall	Metals
Phosphorus (P)-Total	L2612385-45	SPP1-DUSTFALL-27	MET-DUST(DM2)-MS-VA	2.71	0.0032	mg/dm2.day		23-Jun-21	00:00	03-Aug-21	04-Aug-21	1513072	✓	✓	Dustfall	Metals
Potassium (K)-Total	L2612385-45	SPP1-DUSTFALL-27	MET-DUST(DM2)-MS-VA	1.40	0.0032	mg/dm2.day		23-Jun-21	00:00	03-Aug-21	04-Aug-21	1513072	✓	✓	Dustfall	Metals
Selenium (Se)-Total	L2612385-45	SPP1-DUSTFALL-27	MET-DUST(DM2)-MS-VA	0.000142	0.000064	mg/dm2.day		23-Jun-21	00:00	03-Aug-21	04-Aug-21	1513072	✓	✓	Dustfall	Metals
Silicon (Si)-Total	L2612385-45	SPP1-DUSTFALL-27	MET-DUST(DM2)-MS-VA	0.139	0.0032	mg/dm2.day		23-Jun-21	00:00	03-Aug-21	04-Aug-21	1513072	✓	✓	Dustfall	Metals
Silver (Ag)-Total	L2612385-45	SPP1-DUSTFALL-27	MET-DUST(DM2)-MS-VA	0.0000210	0.00000064	mg/dm2.day		23-Jun-21	00:00	03-Aug-21	04-Aug-21	1513072	✓	✓	Dustfall	Metals
Sodium (Na)-Total	L2612385-45	SPP1-DUSTFALL-27	MET-DUST(DM2)-MS-VA	0.187	0.0032	mg/dm2.day		23-Jun-21	00:00	03-Aug-21	04-Aug-21	1513072	✓	✓	Dustfall	Metals
Strontium (Sr)-Total	L2612385-45	SPP1-DUSTFALL-27	MET-DUST(DM2)-MS-VA	0.00143	0.0000064	mg/dm2.day		23-Jun-21	00:00	03-Aug-21	04-Aug-21	1513072	✓	✓	Dustfall	Metals
Thallium (Tl)-Total	L2612385-45	SPP1-DUSTFALL-27	MET-DUST(DM2)-MS-VA	<0.0000064	0.0000064	mg/dm2.day		23-Jun-21	00:00	03-Aug-21	04-Aug-21	1513072	✓	✓	Dustfall	Metals
Tin (Sn)-Total	L2612385-45	SPP1-DUSTFALL-27	MET-DUST(DM2)-MS-VA	<0.0000064	0.0000064	mg/dm2.day		23-Jun-21	00:00	03-Aug-21	04-Aug-21	1513072	✓	✓	Dustfall	Metals
Titanium (Ti)-Total	L2612385-45	SPP1-DUSTFALL-27	MET-DUST(DM2)-MS-VA	0.00085	0.00064	mg/dm2.day		23-Jun-21	00:00	03-Aug-21	04-Aug-21	1513072	✓	✓	Dustfall	Metals
Uranium (U)-Total	L2612385-45	SPP1-DUSTFALL-27	MET-DUST(DM2)-MS-VA	0.00000198	0.00000064	mg/dm2.day		23-Jun-21	00:00	03-Aug-21	04-Aug-21	1513072	✓	✓	Dustfall	Metals
Vanadium (V)-Total	L2612385-45	SPP1-DUSTFALL-27	MET-DUST(DM2)-MS-VA	0.000082	0.000064	mg/dm2.day		23-Jun-21	00:00	03-Aug-21	04-Aug-21	1513072	✓	✓	Dustfall	Metals
Zinc (Zn)-Total	L2612385-45	SPP1-DUSTFALL-27	MET-DUST(DM2)-MS-VA	0.00952	0.00019	mg/dm2.day		23-Jun-21	00:00	03-Aug-21	04-Aug-21	1513072	✓	✓	Dustfall	Metals
Particulates (Dustfall)																
Fixed Dustfall	L2612385-46	SPP1-DUSTFALL-28	DUSTFALLS-ALL-DM2-VA	37.4	0.43	mg/dm2.day		30-Jun-21	00:00		03-Aug-21	1513811	✓	✓	Dustfall	Particulates
Volatile Dustfall	L2612385-46	SPP1-DUSTFALL-28	DUSTFALLS-ALL-DM2-VA	93.4	0.43	mg/dm2.day		30-Jun-21	00:00		03-Aug-21	1513811	✓	✓	Dustfall	Particulates
Total Dustfall	L2612385-46	SPP1-DUSTFALL-28	DUSTFALLS-ALL-DM2-VA	131	0.43	mg/dm2.day		30-Jun-21	00:00		03-Aug-21	1513811	✓	✓	Dustfall	Particulates
Fixed Insoluble Dustfall	L2612385-46	SPP1-DUSTFALL-28	DUSTFALLS-ALL-DM2-VA	15.6	0.43	mg/dm2.day		30-Jun-21	00:00		03-Aug-21	1513811	✓	✓	Dustfall	Particulates
Volatile Insoluble Dustfall	L2612385-46	SPP1-DUSTFALL-28	DUSTFALLS-ALL-DM2-VA	56.5	0.43	mg/dm2.day		30-Jun-21	00:00		03-Aug-21	1513811	✓	✓	Dustfall	Particulates
Total Insoluble Dustfall	L2612385-46	SPP1-DUSTFALL-28	DUSTFALLS-ALL-DM2-VA	72.1	0.43	mg/dm2.day		30-Jun-21	00:00		03-Aug-21	1513811	✓	✓	Dustfall	Particulates
Fixed Soluble Dustfall	L2612385-46	SPP1-DUSTFALL-28	DUSTFALLS-ALL-DM2-VA	21.7	0.43	mg/dm2.day		30-Jun-21	00:00		03-Aug-21	1513811	✓	✓	Dustfall	Particulates
Volatile Soluble Dustfall	L2612385-46	SPP1-DUSTFALL-28	DUSTFALLS-ALL-DM2-VA	36.9	0.43	mg/dm2.day		30-Jun-21	00:00		03-Aug-21	1513811	✓	✓	Dustfall	Particulates
Total Soluble Dustfall	L2612385-46	SPP1-DUSTFALL-28	DUSTFALLS-ALL-DM2-VA	58.6	0.43	mg/dm2.day		30-Jun-21	00:00		03-Aug-21	1513811	✓	✓	Dustfall	Particulates
Metals (Dustfall)																
Aluminum (Al)-Total	L2612385-46	SPP1-DUSTFALL-28	MET-DUST(DM2)-MS-VA	0.0955	0.00021	mg/dm2.day		30-Jun-21	00:00	03-Aug-21	04-Aug-21	1513072	✓	✓	Dustfall	Metals
Antimony (Sb)-Total	L2612385-46	SPP1-DUSTFALL-28	MET-DUST(DM2)-MS-VA	0.0000314	0.0000070	mg/dm2.day		30-Jun-21	00:00	03-Aug-21	04-Aug-21	1513072	✓	✓	Dustfall	Metals
Arsenic (As)-Total	L2612385-46	SPP1-DUSTFALL-28	MET-DUST(DM2)-MS-VA	0.000368	0.0000070	mg/dm2.day		30-Jun-21	00:00	03-Aug-21	04-Aug-21	1513072	✓	✓	Dustfall	Metals
Barium (Ba)-Total	L2612385-46	SPP1-DUSTFALL-28	MET-DUST(DM2)-MS-VA	0.00196	0.0000035	mg/dm2.day		30-Jun-21	00:00	03-Aug-21	04-Aug-21	1513072	×	✓	Dustfall	Metals
Beryllium (Be)-Total	L2612385-46	SPP1-DUSTFALL-28	MET-DUST(DM2)-MS-VA	<0.000035	0.000035	mg/dm2.day		30-Jun-21	00:00	03-Aug-21	04-Aug-21	1513072	✓	✓	Dustfall	Metals

Results of Analysis L2612385

Job Reference NEW GOLD RRP
Report To Sarah Flesher, New Gold Inc. Rainy River Project
Date Received 12-Jul-2021 10:00
Report Date 9-Aug-2021 14:35
Report Version 1

Parameter	ALS ID	Client Sample ID	ALS Test Code	Results	Detection Limit	Units	Qual	Date Sampled	Time Sampled	Prep Date	Analysis Date	QC Lot	QC Eval	Hold Time Eval	Matrix	Class
Bismuth (Bi)-Total	L2612385-46	SPP1-DUSTFALL-28	MET-DUST(DM2)-MS-VA	<0.000035	0.000035	mg/dm2.day		30-Jun-21	00:00	03-Aug-21	04-Aug-21	1513072	✓	✓	Dustfall	Metals
Boron (B)-Total	L2612385-46	SPP1-DUSTFALL-28	MET-DUST(DM2)-MS-VA	0.00391	0.00070	mg/dm2.day		30-Jun-21	00:00	03-Aug-21	04-Aug-21	1513072	✓	✓	Dustfall	Metals
Cadmium (Cd)-Total	L2612385-46	SPP1-DUSTFALL-28	MET-DUST(DM2)-MS-VA	0.0000789	0.0000035	mg/dm2.day		30-Jun-21	00:00	03-Aug-21	04-Aug-21	1513072	✓	✓	Dustfall	Metals
Calcium (Ca)-Total	L2612385-46	SPP1-DUSTFALL-28	MET-DUST(DM2)-MS-VA	3.18	0.0014	mg/dm2.day		30-Jun-21	00:00	03-Aug-21	04-Aug-21	1513072	✓	✓	Dustfall	Metals
Chromium (Cr)-Total	L2612385-46	SPP1-DUSTFALL-28	MET-DUST(DM2)-MS-VA	0.000286	0.000035	mg/dm2.day		30-Jun-21	00:00	03-Aug-21	04-Aug-21	1513072	✓	✓	Dustfall	Metals
Cobalt (Co)-Total	L2612385-46	SPP1-DUSTFALL-28	MET-DUST(DM2)-MS-VA	0.0000866	0.0000070	mg/dm2.day		30-Jun-21	00:00	03-Aug-21	04-Aug-21	1513072	✓	✓	Dustfall	Metals
Copper (Cu)-Total	L2612385-46	SPP1-DUSTFALL-28	MET-DUST(DM2)-MS-VA	0.00717	0.000035	mg/dm2.day		30-Jun-21	00:00	03-Aug-21	04-Aug-21	1513072	×	✓	Dustfall	Metals
Iron (Fe)-Total	L2612385-46	SPP1-DUSTFALL-28	MET-DUST(DM2)-MS-VA	0.175	0.0021	mg/dm2.day		30-Jun-21	00:00	03-Aug-21	04-Aug-21	1513072	✓	✓	Dustfall	Metals
Lead (Pb)-Total	L2612385-46	SPP1-DUSTFALL-28	MET-DUST(DM2)-MS-VA	0.00220	0.0000035	mg/dm2.day		30-Jun-21	00:00	03-Aug-21	04-Aug-21	1513072	✓	✓	Dustfall	Metals
Lithium (Li)-Total	L2612385-46	SPP1-DUSTFALL-28	MET-DUST(DM2)-MS-VA	0.00043	0.00035	mg/dm2.day		30-Jun-21	00:00	03-Aug-21	04-Aug-21	1513072	✓	✓	Dustfall	Metals
Magnesium (Mg)-Total	L2612385-46	SPP1-DUSTFALL-28	MET-DUST(DM2)-MS-VA	0.576	0.00035	mg/dm2.day		30-Jun-21	00:00	03-Aug-21	04-Aug-21	1513072	✓	✓	Dustfall	Metals
Manganese (Mn)-Total	L2612385-46	SPP1-DUSTFALL-28	MET-DUST(DM2)-MS-VA	0.0136	0.0000070	mg/dm2.day		30-Jun-21	00:00	03-Aug-21	04-Aug-21	1513072	✓	✓	Dustfall	Metals
Molybdenum (Mo)-Total	L2612385-46	SPP1-DUSTFALL-28	MET-DUST(DM2)-MS-VA	0.000431	0.0000035	mg/dm2.day		30-Jun-21	00:00	03-Aug-21	04-Aug-21	1513072	✓	✓	Dustfall	Metals
Nickel (Ni)-Total	L2612385-46	SPP1-DUSTFALL-28	MET-DUST(DM2)-MS-VA	0.00139	0.000035	mg/dm2.day		30-Jun-21	00:00	03-Aug-21	04-Aug-21	1513072	✓	✓	Dustfall	Metals
Phosphorus (P)-Total	L2612385-46	SPP1-DUSTFALL-28	MET-DUST(DM2)-MS-VA	5.87	0.0035	mg/dm2.day		30-Jun-21	00:00	03-Aug-21	04-Aug-21	1513072	✓	✓	Dustfall	Metals
Potassium (K)-Total	L2612385-46	SPP1-DUSTFALL-28	MET-DUST(DM2)-MS-VA	6.56	0.0035	mg/dm2.day		30-Jun-21	00:00	03-Aug-21	04-Aug-21	1513072	✓	✓	Dustfall	Metals
Selenium (Se)-Total	L2612385-46	SPP1-DUSTFALL-28	MET-DUST(DM2)-MS-VA	0.000387	0.000070	mg/dm2.day		30-Jun-21	00:00	03-Aug-21	04-Aug-21	1513072	✓	✓	Dustfall	Metals
Silicon (Si)-Total	L2612385-46	SPP1-DUSTFALL-28	MET-DUST(DM2)-MS-VA	0.206	0.0035	mg/dm2.day		30-Jun-21	00:00	03-Aug-21	04-Aug-21	1513072	✓	✓	Dustfall	Metals
Silver (Ag)-Total	L2612385-46	SPP1-DUSTFALL-28	MET-DUST(DM2)-MS-VA	0.0000289	0.00000070	mg/dm2.day		30-Jun-21	00:00	03-Aug-21	04-Aug-21	1513072	✓	✓	Dustfall	Metals
Sodium (Na)-Total	L2612385-46	SPP1-DUSTFALL-28	MET-DUST(DM2)-MS-VA	1.77	0.0035	mg/dm2.day		30-Jun-21	00:00	03-Aug-21	04-Aug-21	1513072	✓	✓	Dustfall	Metals
Strontium (Sr)-Total	L2612385-46	SPP1-DUSTFALL-28	MET-DUST(DM2)-MS-VA	0.00433	0.0000070	mg/dm2.day		30-Jun-21	00:00	03-Aug-21	04-Aug-21	1513072	✓	✓	Dustfall	Metals
Thallium (Tl)-Total	L2612385-46	SPP1-DUSTFALL-28	MET-DUST(DM2)-MS-VA	<0.0000070	0.0000070	mg/dm2.day		30-Jun-21	00:00	03-Aug-21	04-Aug-21	1513072	✓	✓	Dustfall	Metals
Tin (Sn)-Total	L2612385-46	SPP1-DUSTFALL-28	MET-DUST(DM2)-MS-VA	<0.0000070	0.0000070	mg/dm2.day		30-Jun-21	00:00	03-Aug-21	04-Aug-21	1513072	✓	✓	Dustfall	Metals
Titanium (Ti)-Total	L2612385-46	SPP1-DUSTFALL-28	MET-DUST(DM2)-MS-VA	0.00118	0.00070	mg/dm2.day		30-Jun-21	00:00	03-Aug-21	04-Aug-21	1513072	✓	✓	Dustfall	Metals
Uranium (U)-Total	L2612385-46	SPP1-DUSTFALL-28	MET-DUST(DM2)-MS-VA	0.00000725	0.00000070	mg/dm2.day		30-Jun-21	00:00	03-Aug-21	04-Aug-21	1513072	✓	✓	Dustfall	Metals
Vanadium (V)-Total	L2612385-46	SPP1-DUSTFALL-28	MET-DUST(DM2)-MS-VA	0.000183	0.000070	mg/dm2.day		30-Jun-21	00:00	03-Aug-21	04-Aug-21	1513072	✓	✓	Dustfall	Metals
Zinc (Zn)-Total	L2612385-46	SPP1-DUSTFALL-28	MET-DUST(DM2)-MS-VA	0.0540	0.00021	mg/dm2.day		30-Jun-21	00:00	03-Aug-21	04-Aug-21	1513072	✓	✓	Dustfall	Metals
Particulates (Dustfall)																
Fixed Dustfall	L2612385-47	DUSTFALL-GALLINGER ROAD	DUSTFALLS-ALL-DM2-VA	1.48	0.10	mg/dm2.day		30-Jun-21	00:00		03-Aug-21	1513811	✓	✓	Dustfall	Particulates
Volatile Dustfall	L2612385-47	DUSTFALL-GALLINGER ROAD	DUSTFALLS-ALL-DM2-VA	0.67	0.10	mg/dm2.day		30-Jun-21	00:00		03-Aug-21	1513811	✓	✓	Dustfall	Particulates
Total Dustfall	L2612385-47	DUSTFALL-GALLINGER ROAD	DUSTFALLS-ALL-DM2-VA	2.16	0.10	mg/dm2.day		30-Jun-21	00:00		03-Aug-21	1513811	✓	✓	Dustfall	Particulates
Fixed Insoluble Dustfall	L2612385-47	DUSTFALL-GALLINGER ROAD	DUSTFALLS-ALL-DM2-VA	1.32	0.10	mg/dm2.day		30-Jun-21	00:00		03-Aug-21	1513811	✓	✓	Dustfall	Particulates
Volatile Insoluble Dustfall	L2612385-47	DUSTFALL-GALLINGER ROAD	DUSTFALLS-ALL-DM2-VA	0.21	0.10	mg/dm2.day		30-Jun-21	00:00		03-Aug-21	1513811	✓	✓	Dustfall	Particulates
Total Insoluble Dustfall	L2612385-47	DUSTFALL-GALLINGER ROAD	DUSTFALLS-ALL-DM2-VA	1.52	0.10	mg/dm2.day		30-Jun-21	00:00		03-Aug-21	1513811	✓	✓	Dustfall	Particulates
Fixed Soluble Dustfall	L2612385-47	DUSTFALL-GALLINGER ROAD	DUSTFALLS-ALL-DM2-VA	0.17	0.10	mg/dm2.day		30-Jun-21	00:00		03-Aug-21	1513811	✓	✓	Dustfall	Particulates
Volatile Soluble Dustfall	L2612385-47	DUSTFALL-GALLINGER ROAD	DUSTFALLS-ALL-DM2-VA	0.47	0.10	mg/dm2.day		30-Jun-21	00:00		03-Aug-21	1513811	✓	✓	Dustfall	Particulates
Total Soluble Dustfall	L2612385-47	DUSTFALL-GALLINGER ROAD	DUSTFALLS-ALL-DM2-VA	0.63	0.10	mg/dm2.day		30-Jun-21	00:00		03-Aug-21	1513811	✓	✓	Dustfall	Particulates
Metals (Dustfall)																
Aluminum (Al)-Total	L2612385-47	DUSTFALL-GALLINGER ROAD	MET-DUST(DM2)-MS-VA	0.00871	0.000047	mg/dm2.day		30-Jun-21	00:00	03-Aug-21	04-Aug-21	1513072	✓	✓	Dustfall	Metals
Antimony (Sb)-Total	L2612385-47	DUSTFALL-GALLINGER ROAD	MET-DUST(DM2)-MS-VA	0.0000040	0.0000016	mg/dm2.day		30-Jun-21	00:00	03-Aug-21	04-Aug-21	1513072	✓	✓	Dustfall	Metals
Arsenic (As)-Total	L2612385-47	DUSTFALL-GALLINGER ROAD	MET-DUST(DM2)-MS-VA	0.0000043	0.0000016	mg/dm2.day		30-Jun-21	00:00	03-Aug-21	04-Aug-21	1513072	✓	✓	Dustfall	Metals
Barium (Ba)-Total	L2612385-47	DUSTFALL-GALLINGER ROAD	MET-DUST(DM2)-MS-VA	0.000104	0.00000078	mg/dm2.day		30-Jun-21	00:00	03-Aug-21	04-Aug-21	1513072	×	✓	Dustfall	Metals
Beryllium (Be)-Total	L2612385-47	DUSTFALL-GALLINGER ROAD	MET-DUST(DM2)-MS-VA	<0.0000078	0.0000078	mg/dm2.day		30-Jun-21	00:00	03-Aug-21	04-Aug-21	1513072	✓	✓	Dustfall	Metals
Bismuth (Bi)-Total	L2612385-47	DUSTFALL-GALLINGER ROAD	MET-DUST(DM2)-MS-VA	<0.0000078	0.0000078	mg/dm2.day		30-Jun-21	00:00	03-Aug-21	04-Aug-21	1513072	✓	✓	Dustfall	Metals
Boron (B)-Total	L2612385-47	DUSTFALL-GALLINGER ROAD	MET-DUST(DM2)-MS-VA	<0.00016	0.00016	mg/dm2.day		30-Jun-21	00:00	03-Aug-21	04-Aug-21	1513072	✓	✓	Dustfall	Metals
Cadmium (Cd)-Total	L2612385-47	DUSTFALL-GALLINGER ROAD	MET-DUST(DM2)-MS-VA	<0.00000078	0.00000078	mg/dm2.day		30-Jun-21	00:00	03-Aug-21	04-Aug-21	1513072	✓	✓	Dustfall	Metals
Calcium (Ca)-Total	L2612385-47	DUSTFALL-GALLINGER ROAD	MET-DUST(DM2)-MS-VA	0.0431	0.00031	mg/dm2.day		30-Jun-21	00:00	03-Aug-21	04-Aug-21	1513072	✓	✓	Dustfall	Metals
Chromium (Cr)-Total	L2612385-47	DUSTFALL-GALLINGER ROAD	MET-DUST(DM2)-MS-VA	0.0000135	0.0000078	mg/dm2.day		30-Jun-21	00:00	03-Aug-21	04-Aug-21	1513072	✓	✓	Dustfall	Metals
Cobalt (Co)-Total	L2612385-47	DUSTFALL-GALLINGER ROAD	MET-DUST(DM2)-MS-VA	0.0000049	0.0000016	mg/dm2.day		30-Jun-21	00:00	03-Aug-21	04-Aug-21	1513072	✓	✓	Dustfall	Metals
Copper (Cu)-Total	L2612385-47	DUSTFALL-GALLINGER ROAD	MET-DUST(DM2)-MS-VA	<0.000047	0.000047	mg/dm2.day	DLB	30-Jun-21	00:00	03-Aug-21	04-Aug-21	1513072	×	✓	Dustfall	Metals
Iron (Fe)-Total	L2612385-47	DUSTFALL-GALLINGER ROAD	MET-DUST(DM2)-MS-VA	0.00900	0.00047	mg/dm2.day		30-Jun-21	00:00	03-Aug-21	04-Aug-21	1513072	✓	✓	Dustfall	Metals
Lead (Pb)-Total	L2612385-47	DUSTFALL-GALLINGER ROAD	MET-DUST(DM2)-MS-VA	0.0000235	0.00000078	mg/dm2.day		30-Jun-21	00:00	03-Aug-21	04-Aug-21	1513072	✓	✓	Dustfall	Metals
Lithium (Li)-Total	L2612385-47	DUSTFALL-GALLINGER ROAD	MET-DUST(DM2)-MS-VA	<0.000078	0.000078	mg/dm2.day		30-Jun-21	00:00	03-Aug-21	04-Aug-21	1513072	✓	✓	Dustfall	Metals
Magnesium (Mg)-Total	L2612385-47	DUSTFALL-GALLINGER ROAD	MET-DUST(DM2)-MS-VA	0.0110	0.000078	mg/dm2.day		30-Jun-21	00:00	03-Aug-21	04-Aug-21	1513072	✓	✓	Dustfall	Metals
Manganese (Mn)-Total	L2612385-47	DUSTFALL-GALLINGER ROAD	MET-DUST(DM2)-MS-VA	0.000671	0.0000016	mg/dm2.day		30-Jun-21	00:00	03-Aug-21	04-Aug-21	1513072	✓	✓	Dustfall	Metals
Molybdenum (Mo)-Total	L2612385-47	DUSTFALL-GALLINGER ROAD	MET-DUST(DM2)-MS-VA	0.00000107	0.00000078	mg/dm2.day		30-Jun-21	00:00	03-Aug-21	04-Aug-21	1513072	✓	✓	Dustfall	Metals
Nickel (Ni)-Total	L2612385-47	DUSTFALL-GALLINGER ROAD	MET-DUST(DM2)-MS-VA	0.0000180	0.0000078	mg/dm2.day		30-Jun-21	00:00	03-Aug-21	04-Aug-21	1513072	✓	✓	Dustfall	Metals
Phosphorus (P)-Total	L2612385-47	DUSTFALL-GALLINGER ROAD	MET-DUST(DM2)-MS-VA	0.00271	0.00078	mg/dm2.day		30-Jun-21	00:00	03-Aug-21	04-Aug-21	1513072	✓	✓	Dustfall	Metals
Potassium (K)-Total	L2612385-47	DUSTFALL-GALLINGER ROAD	MET-DUST(DM2)-MS-VA	0.0109	0.00078	mg/dm2.day		30-Jun-21	00:00	03-Aug-21	04-Aug-21	1513072	✓	✓	Dustfall	Metals
Selenium (Se)-Total	L2612385-47	DUSTFALL-GALLINGER ROAD	MET-DUST(DM2)-MS-VA	<0.000016	0.000016	mg/dm2.day		30-Jun-21	00:00	03-Aug-21	04-Aug-21	1513072	✓	✓	Dustfall	Metals

Results of Analysis L2612385

Job Reference NEW GOLD RRP
Report To Sarah Flesher, New Gold Inc. Rainy River Project
Date Received 12-Jul-2021 10:00
Report Date 9-Aug-2021 14:35
Report Version 1

Parameter	ALS ID	Client Sample ID	ALS Test Code	Results	Detection Limit	Units	Qual	Date Sampled	Time Sampled	Prep Date	Analysis Date	QC Lot	QC Eval	Hold Time Eval	Matrix	Class
Silicon (Si)-Total	L2612385-47	DUSTFALL-GALLINGER ROAD	MET-DUST(DM2)-MS-VA	0.0125	0.00078	mg/dm2.day		30-Jun-21	00:00	03-Aug-21	04-Aug-21	1513072	✓	✓	Dustfall	Metals
Silver (Ag)-Total	L2612385-47	DUSTFALL-GALLINGER ROAD	MET-DUST(DM2)-MS-VA	0.00000025	0.00000016	mg/dm2.day		30-Jun-21	00:00	03-Aug-21	04-Aug-21	1513072	✓	✓	Dustfall	Metals
Sodium (Na)-Total	L2612385-47	DUSTFALL-GALLINGER ROAD	MET-DUST(DM2)-MS-VA	0.00359	0.00078	mg/dm2.day		30-Jun-21	00:00	03-Aug-21	04-Aug-21	1513072	✓	✓	Dustfall	Metals
Strontium (Sr)-Total	L2612385-47	DUSTFALL-GALLINGER ROAD	MET-DUST(DM2)-MS-VA	0.0000897	0.0000016	mg/dm2.day		30-Jun-21	00:00	03-Aug-21	04-Aug-21	1513072	✓	✓	Dustfall	Metals
Thallium (Tl)-Total	L2612385-47	DUSTFALL-GALLINGER ROAD	MET-DUST(DM2)-MS-VA	<0.0000016	0.0000016	mg/dm2.day		30-Jun-21	00:00	03-Aug-21	04-Aug-21	1513072	✓	✓	Dustfall	Metals
Tin (Sn)-Total	L2612385-47	DUSTFALL-GALLINGER ROAD	MET-DUST(DM2)-MS-VA	<0.0000016	0.0000016	mg/dm2.day		30-Jun-21	00:00	03-Aug-21	04-Aug-21	1513072	✓	✓	Dustfall	Metals
Titanium (Ti)-Total	L2612385-47	DUSTFALL-GALLINGER ROAD	MET-DUST(DM2)-MS-VA	0.00026	0.00016	mg/dm2.day		30-Jun-21	00:00	03-Aug-21	04-Aug-21	1513072	✓	✓	Dustfall	Metals
Uranium (U)-Total	L2612385-47	DUSTFALL-GALLINGER ROAD	MET-DUST(DM2)-MS-VA	0.00000034	0.00000016	mg/dm2.day		30-Jun-21	00:00	03-Aug-21	04-Aug-21	1513072	✓	✓	Dustfall	Metals
Vanadium (V)-Total	L2612385-47	DUSTFALL-GALLINGER ROAD	MET-DUST(DM2)-MS-VA	0.000019	0.000016	mg/dm2.day		30-Jun-21	00:00	03-Aug-21	04-Aug-21	1513072	✓	✓	Dustfall	Metals
Zinc (Zn)-Total	L2612385-47	DUSTFALL-GALLINGER ROAD	MET-DUST(DM2)-MS-VA	0.000198	0.000047	mg/dm2.day		30-Jun-21	00:00	03-Aug-21	04-Aug-21	1513072	✓	✓	Dustfall	Metals
Particulates (Dustfall)																
Fixed Dustfall	L2612385-48	DUSTFALL-TAIT ROAD (SOUTH)	DUSTFALLS-ALL-DM2-VA	1.10	0.10	mg/dm2.day		30-Jun-21	00:00		03-Aug-21	1513811	✓	✓	Dustfall	Particulates
Volatile Dustfall	L2612385-48	DUSTFALL-TAIT ROAD (SOUTH)	DUSTFALLS-ALL-DM2-VA	4.22	0.10	mg/dm2.day		30-Jun-21	00:00		03-Aug-21	1513811	✓	✓	Dustfall	Particulates
Total Dustfall	L2612385-48	DUSTFALL-TAIT ROAD (SOUTH)	DUSTFALLS-ALL-DM2-VA	5.32	0.10	mg/dm2.day		30-Jun-21	00:00		03-Aug-21	1513811	✓	✓	Dustfall	Particulates
Fixed Insoluble Dustfall	L2612385-48	DUSTFALL-TAIT ROAD (SOUTH)	DUSTFALLS-ALL-DM2-VA	0.59	0.10	mg/dm2.day		30-Jun-21	00:00		03-Aug-21	1513811	✓	✓	Dustfall	Particulates
Volatile Insoluble Dustfall	L2612385-48	DUSTFALL-TAIT ROAD (SOUTH)	DUSTFALLS-ALL-DM2-VA	2.26	0.10	mg/dm2.day		30-Jun-21	00:00		03-Aug-21	1513811	✓	✓	Dustfall	Particulates
Total Insoluble Dustfall	L2612385-48	DUSTFALL-TAIT ROAD (SOUTH)	DUSTFALLS-ALL-DM2-VA	2.84	0.10	mg/dm2.day		30-Jun-21	00:00		03-Aug-21	1513811	✓	✓	Dustfall	Particulates
Fixed Soluble Dustfall	L2612385-48	DUSTFALL-TAIT ROAD (SOUTH)	DUSTFALLS-ALL-DM2-VA	0.51	0.10	mg/dm2.day		30-Jun-21	00:00		03-Aug-21	1513811	✓	✓	Dustfall	Particulates
Volatile Soluble Dustfall	L2612385-48	DUSTFALL-TAIT ROAD (SOUTH)	DUSTFALLS-ALL-DM2-VA	1.97	0.10	mg/dm2.day		30-Jun-21	00:00		03-Aug-21	1513811	✓	✓	Dustfall	Particulates
Total Soluble Dustfall	L2612385-48	DUSTFALL-TAIT ROAD (SOUTH)	DUSTFALLS-ALL-DM2-VA	2.48	0.10	mg/dm2.day		30-Jun-21	00:00		03-Aug-21	1513811	✓	✓	Dustfall	Particulates
Metals (Dustfall)																
Aluminum (Al)-Total	L2612385-48	DUSTFALL-TAIT ROAD (SOUTH)	MET-DUST(DM2)-MS-VA	0.00834	0.000047	mg/dm2.day		30-Jun-21	00:00	03-Aug-21	04-Aug-21	1513072	✓	✓	Dustfall	Metals
Antimony (Sb)-Total	L2612385-48	DUSTFALL-TAIT ROAD (SOUTH)	MET-DUST(DM2)-MS-VA	0.0000044	0.0000016	mg/dm2.day		30-Jun-21	00:00	03-Aug-21	04-Aug-21	1513072	✓	✓	Dustfall	Metals
Arsenic (As)-Total	L2612385-48	DUSTFALL-TAIT ROAD (SOUTH)	MET-DUST(DM2)-MS-VA	0.0000057	0.0000016	mg/dm2.day		30-Jun-21	00:00	03-Aug-21	04-Aug-21	1513072	✓	✓	Dustfall	Metals
Barium (Ba)-Total	L2612385-48	DUSTFALL-TAIT ROAD (SOUTH)	MET-DUST(DM2)-MS-VA	0.0000886	0.00000078	mg/dm2.day		30-Jun-21	00:00	03-Aug-21	04-Aug-21	1513072	×	✓	Dustfall	Metals
Beryllium (Be)-Total	L2612385-48	DUSTFALL-TAIT ROAD (SOUTH)	MET-DUST(DM2)-MS-VA	<0.0000078	0.0000078	mg/dm2.day		30-Jun-21	00:00	03-Aug-21	04-Aug-21	1513072	✓	✓	Dustfall	Metals
Bismuth (Bi)-Total	L2612385-48	DUSTFALL-TAIT ROAD (SOUTH)	MET-DUST(DM2)-MS-VA	<0.0000078	0.0000078	mg/dm2.day		30-Jun-21	00:00	03-Aug-21	04-Aug-21	1513072	✓	✓	Dustfall	Metals
Boron (B)-Total	L2612385-48	DUSTFALL-TAIT ROAD (SOUTH)	MET-DUST(DM2)-MS-VA	<0.00016	0.00016	mg/dm2.day		30-Jun-21	00:00	03-Aug-21	04-Aug-21	1513072	✓	✓	Dustfall	Metals
Cadmium (Cd)-Total	L2612385-48	DUSTFALL-TAIT ROAD (SOUTH)	MET-DUST(DM2)-MS-VA	0.00000441	0.00000078	mg/dm2.day		30-Jun-21	00:00	03-Aug-21	04-Aug-21	1513072	✓	✓	Dustfall	Metals
Calcium (Ca)-Total	L2612385-48	DUSTFALL-TAIT ROAD (SOUTH)	MET-DUST(DM2)-MS-VA	0.0365	0.00031	mg/dm2.day		30-Jun-21	00:00	03-Aug-21	04-Aug-21	1513072	✓	✓	Dustfall	Metals
Chromium (Cr)-Total	L2612385-48	DUSTFALL-TAIT ROAD (SOUTH)	MET-DUST(DM2)-MS-VA	0.0000298	0.0000078	mg/dm2.day		30-Jun-21	00:00	03-Aug-21	04-Aug-21	1513072	✓	✓	Dustfall	Metals
Cobalt (Co)-Total	L2612385-48	DUSTFALL-TAIT ROAD (SOUTH)	MET-DUST(DM2)-MS-VA	0.0000088	0.0000016	mg/dm2.day		30-Jun-21	00:00	03-Aug-21	04-Aug-21	1513072	✓	✓	Dustfall	Metals
Copper (Cu)-Total	L2612385-48	DUSTFALL-TAIT ROAD (SOUTH)	MET-DUST(DM2)-MS-VA	0.000249	0.0000078	mg/dm2.day		30-Jun-21	00:00	03-Aug-21	04-Aug-21	1513072	×	✓	Dustfall	Metals
Iron (Fe)-Total	L2612385-48	DUSTFALL-TAIT ROAD (SOUTH)	MET-DUST(DM2)-MS-VA	0.0108	0.00047	mg/dm2.day		30-Jun-21	00:00	03-Aug-21	04-Aug-21	1513072	✓	✓	Dustfall	Metals
Lead (Pb)-Total	L2612385-48	DUSTFALL-TAIT ROAD (SOUTH)	MET-DUST(DM2)-MS-VA	0.0000152	0.00000078	mg/dm2.day		30-Jun-21	00:00	03-Aug-21	04-Aug-21	1513072	✓	✓	Dustfall	Metals
Lithium (Li)-Total	L2612385-48	DUSTFALL-TAIT ROAD (SOUTH)	MET-DUST(DM2)-MS-VA	<0.000078	0.000078	mg/dm2.day		30-Jun-21	00:00	03-Aug-21	04-Aug-21	1513072	✓	✓	Dustfall	Metals
Magnesium (Mg)-Total	L2612385-48	DUSTFALL-TAIT ROAD (SOUTH)	MET-DUST(DM2)-MS-VA	0.0189	0.000078	mg/dm2.day		30-Jun-21	00:00	03-Aug-21	04-Aug-21	1513072	✓	✓	Dustfall	Metals
Manganese (Mn)-Total	L2612385-48	DUSTFALL-TAIT ROAD (SOUTH)	MET-DUST(DM2)-MS-VA	0.000940	0.0000016	mg/dm2.day		30-Jun-21	00:00	03-Aug-21	04-Aug-21	1513072	✓	✓	Dustfall	Metals
Molybdenum (Mo)-Total	L2612385-48	DUSTFALL-TAIT ROAD (SOUTH)	MET-DUST(DM2)-MS-VA	0.0000148	0.00000078	mg/dm2.day		30-Jun-21	00:00	03-Aug-21	04-Aug-21	1513072	✓	✓	Dustfall	Metals
Nickel (Ni)-Total	L2612385-48	DUSTFALL-TAIT ROAD (SOUTH)	MET-DUST(DM2)-MS-VA	0.0000504	0.0000078	mg/dm2.day		30-Jun-21	00:00	03-Aug-21	04-Aug-21	1513072	✓	✓	Dustfall	Metals
Phosphorus (P)-Total	L2612385-48	DUSTFALL-TAIT ROAD (SOUTH)	MET-DUST(DM2)-MS-VA	0.110	0.00078	mg/dm2.day		30-Jun-21	00:00	03-Aug-21	04-Aug-21	1513072	✓	✓	Dustfall	Metals
Potassium (K)-Total	L2612385-48	DUSTFALL-TAIT ROAD (SOUTH)	MET-DUST(DM2)-MS-VA	0.153	0.00078	mg/dm2.day		30-Jun-21	00:00	03-Aug-21	04-Aug-21	1513072	✓	✓	Dustfall	Metals
Selenium (Se)-Total	L2612385-48	DUSTFALL-TAIT ROAD (SOUTH)	MET-DUST(DM2)-MS-VA	0.000017	0.000016	mg/dm2.day		30-Jun-21	00:00	03-Aug-21	04-Aug-21	1513072	✓	✓	Dustfall	Metals
Silicon (Si)-Total	L2612385-48	DUSTFALL-TAIT ROAD (SOUTH)	MET-DUST(DM2)-MS-VA	0.0124	0.00078	mg/dm2.day		30-Jun-21	00:00	03-Aug-21	04-Aug-21	1513072	✓	✓	Dustfall	Metals
Silver (Ag)-Total	L2612385-48	DUSTFALL-TAIT ROAD (SOUTH)	MET-DUST(DM2)-MS-VA	0.00000030	0.00000016	mg/dm2.day		30-Jun-21	00:00	03-Aug-21	04-Aug-21	1513072	✓	✓	Dustfall	Metals
Sodium (Na)-Total	L2612385-48	DUSTFALL-TAIT ROAD (SOUTH)	MET-DUST(DM2)-MS-VA	0.0111	0.00078	mg/dm2.day		30-Jun-21	00:00	03-Aug-21	04-Aug-21	1513072	✓	✓	Dustfall	Metals
Strontium (Sr)-Total	L2612385-48	DUSTFALL-TAIT ROAD (SOUTH)	MET-DUST(DM2)-MS-VA	0.0000944	0.0000016	mg/dm2.day		30-Jun-21	00:00	03-Aug-21	04-Aug-21	1513072	✓	✓	Dustfall	Metals
Thallium (Tl)-Total	L2612385-48	DUSTFALL-TAIT ROAD (SOUTH)	MET-DUST(DM2)-MS-VA	<0.0000016	0.0000016	mg/dm2.day		30-Jun-21	00:00	03-Aug-21	04-Aug-21	1513072	✓	✓	Dustfall	Metals
Tin (Sn)-Total	L2612385-48	DUSTFALL-TAIT ROAD (SOUTH)	MET-DUST(DM2)-MS-VA	<0.0000016	0.0000016	mg/dm2.day		30-Jun-21	00:00	03-Aug-21	04-Aug-21	1513072	✓	✓	Dustfall	Metals
Titanium (Ti)-Total	L2612385-48	DUSTFALL-TAIT ROAD (SOUTH)	MET-DUST(DM2)-MS-VA	0.00017	0.00016	mg/dm2.day		30-Jun-21	00:00	03-Aug-21	04-Aug-21	1513072	✓	✓	Dustfall	Metals
Uranium (U)-Total	L2612385-48	DUSTFALL-TAIT ROAD (SOUTH)	MET-DUST(DM2)-MS-VA	0.00000039	0.00000016	mg/dm2.day		30-Jun-21	00:00	03-Aug-21	04-Aug-21	1513072	✓	✓	Dustfall	Metals
Vanadium (V)-Total	L2612385-48	DUSTFALL-TAIT ROAD (SOUTH)	MET-DUST(DM2)-MS-VA	0.000019	0.000016	mg/dm2.day		30-Jun-21	00:00	03-Aug-21	04-Aug-21	1513072	✓	✓	Dustfall	Metals
Zinc (Zn)-Total	L2612385-48	DUSTFALL-TAIT ROAD (SOUTH)	MET-DUST(DM2)-MS-VA	0.00148	0.000047	mg/dm2.day		30-Jun-21	00:00	03-Aug-21	04-Aug-21	1513072	✓	✓	Dustfall	Metals
Particulates (Dustfall)																
Fixed Dustfall	L2612385-49	DUSTFALL-NORTHWEST	DUSTFALLS-ALL-DM2-VA	0.33	0.10	mg/dm2.day		30-Jun-21	00:00		03-Aug-21	1513811	✓	✓	Dustfall	Particulates
Volatile Dustfall	L2612385-49	DUSTFALL-NORTHWEST	DUSTFALLS-ALL-DM2-VA	3.46	0.10	mg/dm2.day		30-Jun-21	00:00		03-Aug-21	1513811	✓	✓	Dustfall	Particulates
Total Dustfall	L2612385-49	DUSTFALL-NORTHWEST	DUSTFALLS-ALL-DM2-VA	3.80	0.10	mg/dm2.day		30-Jun-21	00:00		03-Aug-21	1513811	✓	✓	Dustfall	Particulates
Fixed Insoluble Dustfall	L2612385-49	DUSTFALL-NORTHWEST	DUSTFALLS-ALL-DM2-VA	0.21	0.10	mg/dm2.day		30-Jun-21	00:00		03-Aug-21	1513811	✓	✓	Dustfall	Particulates
Volatile Insoluble Dustfall	L2612385-49	DUSTFALL-NORTHWEST	DUSTFALLS-ALL-DM2-VA	0.47	0.10	mg/dm2.day		30-Jun-21	00:00		03-Aug-21	1513811	✓	✓	Dustfall	Particulates

Results of Analysis L2612385

Job Reference NEW GOLD RRP
Report To Sarah Flesher, New Gold Inc. Rainy River Project
Date Received 12-Jul-2021 10:00
Report Date 9-Aug-2021 14:35
Report Version 1

Parameter	ALS ID	Client Sample ID	ALS Test Code	Results	Detection Limit	Units	Qual	Date Sampled	Time Sampled	Prep Date	Analysis Date	QC Lot	QC Eval	Hold Time Eval	Matrix	Class
Total Insoluble Dustfall	L2612385-49	DUSTFALL-NORTHWEST	DUSTFALLS-ALL-DM2-VA	0.68	0.10	mg/dm2.day		30-Jun-21	00:00		03-Aug-21	1513811	✓	✓	Dustfall	Particulates
Fixed Soluble Dustfall	L2612385-49	DUSTFALL-NORTHWEST	DUSTFALLS-ALL-DM2-VA	0.12	0.10	mg/dm2.day		30-Jun-21	00:00		03-Aug-21	1513811	✓	✓	Dustfall	Particulates
Volatile Soluble Dustfall	L2612385-49	DUSTFALL-NORTHWEST	DUSTFALLS-ALL-DM2-VA	3.00	0.10	mg/dm2.day		30-Jun-21	00:00		03-Aug-21	1513811	✓	✓	Dustfall	Particulates
Total Soluble Dustfall	L2612385-49	DUSTFALL-NORTHWEST	DUSTFALLS-ALL-DM2-VA	3.12	0.10	mg/dm2.day		30-Jun-21	00:00		03-Aug-21	1513811	✓	✓	Dustfall	Particulates
Metals (Dustfall)																
Aluminum (Al)-Total	L2612385-49	DUSTFALL-NORTHWEST	MET-DUST(DM2)-MS-VA	0.00198	0.000049	mg/dm2.day		30-Jun-21	00:00	03-Aug-21	04-Aug-21	1513072	✓	✓	Dustfall	Metals
Antimony (Sb)-Total	L2612385-49	DUSTFALL-NORTHWEST	MET-DUST(DM2)-MS-VA	0.0000017	0.0000016	mg/dm2.day		30-Jun-21	00:00	03-Aug-21	04-Aug-21	1513072	✓	✓	Dustfall	Metals
Arsenic (As)-Total	L2612385-49	DUSTFALL-NORTHWEST	MET-DUST(DM2)-MS-VA	0.0000022	0.0000016	mg/dm2.day		30-Jun-21	00:00	03-Aug-21	04-Aug-21	1513072	✓	✓	Dustfall	Metals
Barium (Ba)-Total	L2612385-49	DUSTFALL-NORTHWEST	MET-DUST(DM2)-MS-VA	0.0000655	0.00000081	mg/dm2.day		30-Jun-21	00:00	03-Aug-21	04-Aug-21	1513072	×	✓	Dustfall	Metals
Beryllium (Be)-Total	L2612385-49	DUSTFALL-NORTHWEST	MET-DUST(DM2)-MS-VA	<0.0000081	0.0000081	mg/dm2.day		30-Jun-21	00:00	03-Aug-21	04-Aug-21	1513072	✓	✓	Dustfall	Metals
Bismuth (Bi)-Total	L2612385-49	DUSTFALL-NORTHWEST	MET-DUST(DM2)-MS-VA	<0.0000081	0.0000081	mg/dm2.day		30-Jun-21	00:00	03-Aug-21	04-Aug-21	1513072	✓	✓	Dustfall	Metals
Boron (B)-Total	L2612385-49	DUSTFALL-NORTHWEST	MET-DUST(DM2)-MS-VA	<0.00016	0.00016	mg/dm2.day		30-Jun-21	00:00	03-Aug-21	04-Aug-21	1513072	✓	✓	Dustfall	Metals
Cadmium (Cd)-Total	L2612385-49	DUSTFALL-NORTHWEST	MET-DUST(DM2)-MS-VA	<0.00000081	0.00000081	mg/dm2.day		30-Jun-21	00:00	03-Aug-21	04-Aug-21	1513072	✓	✓	Dustfall	Metals
Calcium (Ca)-Total	L2612385-49	DUSTFALL-NORTHWEST	MET-DUST(DM2)-MS-VA	0.0367	0.00032	mg/dm2.day		30-Jun-21	00:00	03-Aug-21	04-Aug-21	1513072	✓	✓	Dustfall	Metals
Chromium (Cr)-Total	L2612385-49	DUSTFALL-NORTHWEST	MET-DUST(DM2)-MS-VA	<0.0000081	0.0000081	mg/dm2.day		30-Jun-21	00:00	03-Aug-21	04-Aug-21	1513072	✓	✓	Dustfall	Metals
Cobalt (Co)-Total	L2612385-49	DUSTFALL-NORTHWEST	MET-DUST(DM2)-MS-VA	<0.0000016	0.0000016	mg/dm2.day		30-Jun-21	00:00	03-Aug-21	04-Aug-21	1513072	✓	✓	Dustfall	Metals
Copper (Cu)-Total	L2612385-49	DUSTFALL-NORTHWEST	MET-DUST(DM2)-MS-VA	0.000192	0.0000081	mg/dm2.day		30-Jun-21	00:00	03-Aug-21	04-Aug-21	1513072	×	✓	Dustfall	Metals
Iron (Fe)-Total	L2612385-49	DUSTFALL-NORTHWEST	MET-DUST(DM2)-MS-VA	0.00272	0.00049	mg/dm2.day		30-Jun-21	00:00	03-Aug-21	04-Aug-21	1513072	✓	✓	Dustfall	Metals
Lead (Pb)-Total	L2612385-49	DUSTFALL-NORTHWEST	MET-DUST(DM2)-MS-VA	0.00000538	0.00000081	mg/dm2.day		30-Jun-21	00:00	03-Aug-21	04-Aug-21	1513072	✓	✓	Dustfall	Metals
Lithium (Li)-Total	L2612385-49	DUSTFALL-NORTHWEST	MET-DUST(DM2)-MS-VA	<0.000081	0.000081	mg/dm2.day		30-Jun-21	00:00	03-Aug-21	04-Aug-21	1513072	✓	✓	Dustfall	Metals
Magnesium (Mg)-Total	L2612385-49	DUSTFALL-NORTHWEST	MET-DUST(DM2)-MS-VA	0.0188	0.000081	mg/dm2.day		30-Jun-21	00:00	03-Aug-21	04-Aug-21	1513072	✓	✓	Dustfall	Metals
Manganese (Mn)-Total	L2612385-49	DUSTFALL-NORTHWEST	MET-DUST(DM2)-MS-VA	0.000396	0.0000016	mg/dm2.day		30-Jun-21	00:00	03-Aug-21	04-Aug-21	1513072	✓	✓	Dustfall	Metals
Molybdenum (Mo)-Total	L2612385-49	DUSTFALL-NORTHWEST	MET-DUST(DM2)-MS-VA	0.00000204	0.00000081	mg/dm2.day		30-Jun-21	00:00	03-Aug-21	04-Aug-21	1513072	✓	✓	Dustfall	Metals
Nickel (Ni)-Total	L2612385-49	DUSTFALL-NORTHWEST	MET-DUST(DM2)-MS-VA	0.0000088	0.0000081	mg/dm2.day		30-Jun-21	00:00	03-Aug-21	04-Aug-21	1513072	✓	✓	Dustfall	Metals
Phosphorus (P)-Total	L2612385-49	DUSTFALL-NORTHWEST	MET-DUST(DM2)-MS-VA	0.0743	0.00081	mg/dm2.day		30-Jun-21	00:00	03-Aug-21	04-Aug-21	1513072	✓	✓	Dustfall	Metals
Potassium (K)-Total	L2612385-49	DUSTFALL-NORTHWEST	MET-DUST(DM2)-MS-VA	0.0501	0.00081	mg/dm2.day		30-Jun-21	00:00	03-Aug-21	04-Aug-21	1513072	✓	✓	Dustfall	Metals
Selenium (Se)-Total	L2612385-49	DUSTFALL-NORTHWEST	MET-DUST(DM2)-MS-VA	<0.000016	0.000016	mg/dm2.day		30-Jun-21	00:00	03-Aug-21	04-Aug-21	1513072	✓	✓	Dustfall	Metals
Silicon (Si)-Total	L2612385-49	DUSTFALL-NORTHWEST	MET-DUST(DM2)-MS-VA	0.00402	0.00081	mg/dm2.day		30-Jun-21	00:00	03-Aug-21	04-Aug-21	1513072	✓	✓	Dustfall	Metals
Silver (Ag)-Total	L2612385-49	DUSTFALL-NORTHWEST	MET-DUST(DM2)-MS-VA	<0.00000016	0.00000016	mg/dm2.day		30-Jun-21	00:00	03-Aug-21	04-Aug-21	1513072	✓	✓	Dustfall	Metals
Sodium (Na)-Total	L2612385-49	DUSTFALL-NORTHWEST	MET-DUST(DM2)-MS-VA	0.00701	0.00081	mg/dm2.day		30-Jun-21	00:00	03-Aug-21	04-Aug-21	1513072	✓	✓	Dustfall	Metals
Strontium (Sr)-Total	L2612385-49	DUSTFALL-NORTHWEST	MET-DUST(DM2)-MS-VA	0.0000942	0.0000016	mg/dm2.day		30-Jun-21	00:00	03-Aug-21	04-Aug-21	1513072	✓	✓	Dustfall	Metals
Thallium (Tl)-Total	L2612385-49	DUSTFALL-NORTHWEST	MET-DUST(DM2)-MS-VA	<0.0000016	0.0000016	mg/dm2.day		30-Jun-21	00:00	03-Aug-21	04-Aug-21	1513072	✓	✓	Dustfall	Metals
Tin (Sn)-Total	L2612385-49	DUSTFALL-NORTHWEST	MET-DUST(DM2)-MS-VA	<0.0000016	0.0000016	mg/dm2.day		30-Jun-21	00:00	03-Aug-21	04-Aug-21	1513072	✓	✓	Dustfall	Metals
Titanium (Ti)-Total	L2612385-49	DUSTFALL-NORTHWEST	MET-DUST(DM2)-MS-VA	<0.00016	0.00016	mg/dm2.day		30-Jun-21	00:00	03-Aug-21	04-Aug-21	1513072	✓	✓	Dustfall	Metals
Uranium (U)-Total	L2612385-49	DUSTFALL-NORTHWEST	MET-DUST(DM2)-MS-VA	0.00000019	0.00000016	mg/dm2.day		30-Jun-21	00:00	03-Aug-21	04-Aug-21	1513072	✓	✓	Dustfall	Metals
Vanadium (V)-Total	L2612385-49	DUSTFALL-NORTHWEST	MET-DUST(DM2)-MS-VA	<0.000016	0.000016	mg/dm2.day		30-Jun-21	00:00	03-Aug-21	04-Aug-21	1513072	✓	✓	Dustfall	Metals
Zinc (Zn)-Total	L2612385-49	DUSTFALL-NORTHWEST	MET-DUST(DM2)-MS-VA	0.000957	0.000049	mg/dm2.day		30-Jun-21	00:00	03-Aug-21	04-Aug-21	1513072	✓	✓	Dustfall	Metals

Qualifier Legend

DLB Detection Limit Raised. Analyte detected at comparable level in Method Blank.
DLM Detection Limit Adjusted due to sample matrix effects (e.g. chemical interference, colour, turbidity).

Evaluation Legend

✓ QC Lot met ALS Data Quality Objectives or Test result met ALS Hold Time Recommendations
× QC Lot did not meet ALS Data Quality Objectives or Test result did not meet ALS Hold Time Recommendations

Duplicates L2612385

Job Reference NEW GOLD RRP
Report To Sarah Flesher, New Gold Inc. Rainy River Project
Date Received 12-Jul-2021 10:00
Report Date 9-Aug-2021 14:35
Report Version 1

ALS ID	Reference	Client Sample ID	QC Type	QC Lot #	Analyte	Sample Result	Duplicate Result	Detection Limit	Units	RPD	RPD Limit	Diff	Diff Limit	Qual	Eval	Matrix	Class
Particulates (Filter)																	
WG3578459-3	L2612385-1	SOUTH-TSP-366	DUP	1506121	Total particulate	65700	65500	2300	ug	0.3	5	-			✓	Filter	Particulates
WG3587142-3	L2612385-20	SOUTH-PM2.5-366	DUP	1512481	Total particulate	146	148	15	ug	1.4	10	-			✓	Filter	Particulates
Total Metals (Filter)																	
WG3581393-3	L2612385-1	SOUTH-TSP-366	DUP	1508243	Arsenic (As)	<3.0	<3.0	3.0	ug	N/A	20	-			✓	Filter	Total Metals
WG3581393-3	L2612385-1	SOUTH-TSP-366	DUP	1508243	Cadmium (Cd)	<2.0	<2.0	2.0	ug	N/A	20	-			✓	Filter	Total Metals
WG3581393-3	L2612385-1	SOUTH-TSP-366	DUP	1508243	Chromium (Cr)	<5.0	<5.0	5.0	ug	N/A	20	-			✓	Filter	Total Metals
WG3581393-3	L2612385-1	SOUTH-TSP-366	DUP	1508243	Cobalt (Co)	<2.0	<2.0	2.0	ug	N/A	20	-			✓	Filter	Total Metals
WG3581393-3	L2612385-1	SOUTH-TSP-366	DUP	1508243	Copper (Cu)	132	136	4.0	ug	2.7	20	-			✓	Filter	Total Metals
WG3581393-3	L2612385-1	SOUTH-TSP-366	DUP	1508243	Iron (Fe)	1480	1620	20	ug	9.6	25	-			✓	Filter	Total Metals
WG3581393-3	L2612385-1	SOUTH-TSP-366	DUP	1508243	Lead (Pb)	<3.0	<3.0	3.0	ug	N/A	20	-			✓	Filter	Total Metals
WG3581393-3	L2612385-1	SOUTH-TSP-366	DUP	1508243	Manganese (Mn)	44.0	46.8	1.0	ug	6.1	20	-			✓	Filter	Total Metals
WG3581393-3	L2612385-1	SOUTH-TSP-366	DUP	1508243	Nickel (Ni)	<3.0	<3.0	3.0	ug	N/A	20	-			✓	Filter	Total Metals
WG3581393-3	L2612385-1	SOUTH-TSP-366	DUP	1508243	Selenium (Se)	<10	<10	10	ug	N/A	20	-			✓	Filter	Total Metals
WG3581393-3	L2612385-1	SOUTH-TSP-366	DUP	1508243	Vanadium (V)	<5.0	<5.0	5.0	ug	N/A	20	-			✓	Filter	Total Metals
WG3581393-3	L2612385-1	SOUTH-TSP-366	DUP	1508243	Zinc (Zn)	21.7	21.2	5.0	ug	2.5	20	-			✓	Filter	Total Metals
Metals (Dustfall)																	
WG3590018-3	L2612385-39	NOP1-DUSTFALL-6	DUP	1514612	Aluminum (Al)-Total	0.0353	0.0711	0.000067	mg/dm2.day	67	20	-		DUP-H	✗	Dustfall	Metals
WG3590018-3	L2612385-39	NOP1-DUSTFALL-6	DUP	1514612	Antimony (Sb)-Total	0.0000042	0.0000073	0.0000022	mg/dm2.day	-		0.0000032	0.0000044		✓	Dustfall	Metals
WG3590018-3	L2612385-39	NOP1-DUSTFALL-6	DUP	1514612	Arsenic (As)-Total	0.0000244	0.0000452	0.0000022	mg/dm2.day	60	20	-		DUP-H	✗	Dustfall	Metals
WG3590018-3	L2612385-39	NOP1-DUSTFALL-6	DUP	1514612	Barium (Ba)-Total	0.000503	0.000647	0.0000011	mg/dm2.day	25	20	-		DUP-H	✗	Dustfall	Metals
WG3590018-3	L2612385-39	NOP1-DUSTFALL-6	DUP	1514612	Beryllium (Be)-Total	<0.000011	<0.000011	0.000011	mg/dm2.day	N/A	20	-			✓	Dustfall	Metals
WG3590018-3	L2612385-39	NOP1-DUSTFALL-6	DUP	1514612	Bismuth (Bi)-Total	<0.000011	<0.000011	0.000011	mg/dm2.day	N/A	20	-			✓	Dustfall	Metals
WG3590018-3	L2612385-39	NOP1-DUSTFALL-6	DUP	1514612	Boron (B)-Total	<0.00022	<0.00022	0.00022	mg/dm2.day	N/A	20	-			✓	Dustfall	Metals
WG3590018-3	L2612385-39	NOP1-DUSTFALL-6	DUP	1514612	Cadmium (Cd)-Total	0.0000037	0.0000061	0.0000011	mg/dm2.day	-		0.0000024	0.0000022	DUP-H,J	✗	Dustfall	Metals
WG3590018-3	L2612385-39	NOP1-DUSTFALL-6	DUP	1514612	Calcium (Ca)-Total	0.376	0.416	0.00045	mg/dm2.day	10	20	-			✓	Dustfall	Metals
WG3590018-3	L2612385-39	NOP1-DUSTFALL-6	DUP	1514612	Chromium (Cr)-Total	0.000066	0.000125	0.000011	mg/dm2.day	-		0.000059	0.000022	DUP-H,J	✗	Dustfall	Metals
WG3590018-3	L2612385-39	NOP1-DUSTFALL-6	DUP	1514612	Cobalt (Co)-Total	0.0000258	0.0000455	0.0000022	mg/dm2.day	55	20	-		DUP-H	✗	Dustfall	Metals
WG3590018-3	L2612385-39	NOP1-DUSTFALL-6	DUP	1514612	Copper (Cu)-Total	0.000153	0.000265	0.000011	mg/dm2.day	53	20	-		DUP-H	✗	Dustfall	Metals
WG3590018-3	L2612385-39	NOP1-DUSTFALL-6	DUP	1514612	Iron (Fe)-Total	0.0359	0.0809	0.00067	mg/dm2.day	77	20	-		DUP-H	✗	Dustfall	Metals
WG3590018-3	L2612385-39	NOP1-DUSTFALL-6	DUP	1514612	Lead (Pb)-Total	0.000125	0.000228	0.0000011	mg/dm2.day	59	20	-		DUP-H	✗	Dustfall	Metals
WG3590018-3	L2612385-39	NOP1-DUSTFALL-6	DUP	1514612	Lithium (Li)-Total	<0.00011	0.00013	0.00011	mg/dm2.day	N/A	20	-			✓	Dustfall	Metals
WG3590018-3	L2612385-39	NOP1-DUSTFALL-6	DUP	1514612	Magnesium (Mg)-Total	0.108	0.126	0.00011	mg/dm2.day	15	20	-			✓	Dustfall	Metals
WG3590018-3	L2612385-39	NOP1-DUSTFALL-6	DUP	1514612	Manganese (Mn)-Total	0.00375	0.00458	0.0000022	mg/dm2.day	20	20	-			✓	Dustfall	Metals
WG3590018-3	L2612385-39	NOP1-DUSTFALL-6	DUP	1514612	Molybdenum (Mo)-Total	0.0000034	0.0000060	0.0000011	mg/dm2.day	-		0.0000026	0.0000022	DUP-H,J	✗	Dustfall	Metals
WG3590018-3	L2612385-39	NOP1-DUSTFALL-6	DUP	1514612	Nickel (Ni)-Total	0.000064	0.000108	0.000011	mg/dm2.day	-		0.000044	0.000022	DUP-H,J	✗	Dustfall	Metals
WG3590018-3	L2612385-39	NOP1-DUSTFALL-6	DUP	1514612	Phosphorus (P)-Total	0.0028	0.0040	0.0011	mg/dm2.day	-		0.0012	0.0022		✓	Dustfall	Metals
WG3590018-3	L2612385-39	NOP1-DUSTFALL-6	DUP	1514612	Potassium (K)-Total	0.0256	0.0340	0.0011	mg/dm2.day	28	20	-		DUP-H	✗	Dustfall	Metals
WG3590018-3	L2612385-39	NOP1-DUSTFALL-6	DUP	1514612	Selenium (Se)-Total	<0.000022	<0.000022	0.000022	mg/dm2.day	N/A	20	-			✓	Dustfall	Metals
WG3590018-3	L2612385-39	NOP1-DUSTFALL-6	DUP	1514612	Silicon (Si)-Total	0.0584	0.119	0.0011	mg/dm2.day	68	20	-		DUP-H	✗	Dustfall	Metals
WG3590018-3	L2612385-39	NOP1-DUSTFALL-6	DUP	1514612	Silver (Ag)-Total	0.00000201	0.00000471	0.00000022	mg/dm2.day	80	20	-		DUP-H	✗	Dustfall	Metals
WG3590018-3	L2612385-39	NOP1-DUSTFALL-6	DUP	1514612	Sodium (Na)-Total	0.0116	0.0152	0.0011	mg/dm2.day	27	20	-		DUP-H	✗	Dustfall	Metals
WG3590018-3	L2612385-39	NOP1-DUSTFALL-6	DUP	1514612	Strontium (Sr)-Total	0.000622	0.000729	0.0000022	mg/dm2.day	16	20	-			✓	Dustfall	Metals
WG3590018-3	L2612385-39	NOP1-DUSTFALL-6	DUP	1514612	Thallium (Tl)-Total	<0.0000022	<0.0000022	0.0000022	mg/dm2.day	N/A	20	-			✓	Dustfall	Metals
WG3590018-3	L2612385-39	NOP1-DUSTFALL-6	DUP	1514612	Tin (Sn)-Total	<0.0000022	<0.0000022	0.0000022	mg/dm2.day	N/A	20	-			✓	Dustfall	Metals
WG3590018-3	L2612385-39	NOP1-DUSTFALL-6	DUP	1514612	Titanium (Ti)-Total	0.00116	0.00268	0.00022	mg/dm2.day	-		0.00152	0.00044	DUP-H,J	✗	Dustfall	Metals
WG3590018-3	L2612385-39	NOP1-DUSTFALL-6	DUP	1514612	Uranium (U)-Total	0.00000128	0.00000275	0.00000022	mg/dm2.day	-		0.00000147	0.00000044	DUP-H,J	✗	Dustfall	Metals
WG3590018-3	L2612385-39	NOP1-DUSTFALL-6	DUP	1514612	Vanadium (V)-Total	0.000071	0.000148	0.000022	mg/dm2.day	-		0.000077	0.000044	DUP-H,J	✗	Dustfall	Metals
WG3590018-3	L2612385-39	NOP1-DUSTFALL-6	DUP	1514612	Zinc (Zn)-Total	0.000819	0.00163	0.000067	mg/dm2.day	66	20	-		DUP-H	✗	Dustfall	Metals

Qualifier Legend

DUP-H	Duplicate results outside ALS DQO, due to sample heterogeneity.
DUP-H,J	Duplicate results outside ALS DQO, due to sample heterogeneity. Duplicate results and limits are expressed in terms of absolute difference.

Evaluation Legend

✓	QC Lot met ALS Data Quality Objectives
✗	QC Lot did not meet ALS Data Quality Objectives

Quality Control L2612385

Job Reference NEW GOLD RRP
Report To Sarah Flesher, New Gold Inc. Rainy River Project
Date Received 12-Jul-2021 10:00
Report Date 9-Aug-2021 14:35
Report Version 1

QC Type	Analyte	QC Lot #	ALS QC ID	Result	Target	Units	%	Limit	Units	Qual	Eval	Matrix	Class
Total Metals (Filter)													
LCS	Arsenic (As)	1508243	WG3581393-2	41.0	45	ug	91.2	80-120	%		✓	Filter	Total Metals
LCS	Cadmium (Cd)	1508243	WG3581393-2	22.3	22.5	ug	99.0	80-120	%		✓	Filter	Total Metals
LCS	Chromium (Cr)	1508243	WG3581393-2	43.7	45	ug	97.2	80-120	%		✓	Filter	Total Metals
LCS	Cobalt (Co)	1508243	WG3581393-2	43.5	45	ug	96.7	80-120	%		✓	Filter	Total Metals
LCS	Copper (Cu)	1508243	WG3581393-2	44.3	45	ug	98.5	80-120	%		✓	Filter	Total Metals
LCS	Iron (Fe)	1508243	WG3581393-2	211	225	ug	93.8	80-120	%		✓	Filter	Total Metals
LCS	Lead (Pb)	1508243	WG3581393-2	42.4	45	ug	94.2	80-120	%		✓	Filter	Total Metals
LCS	Manganese (Mn)	1508243	WG3581393-2	41.4	45	ug	92.0	80-120	%		✓	Filter	Total Metals
LCS	Nickel (Ni)	1508243	WG3581393-2	41.9	45	ug	93.1	80-120	%		✓	Filter	Total Metals
LCS	Selenium (Se)	1508243	WG3581393-2	41.4	45	ug	91.9	80-120	%		✓	Filter	Total Metals
LCS	Vanadium (V)	1508243	WG3581393-2	41.8	45	ug	92.9	80-120	%		✓	Filter	Total Metals
LCS	Zinc (Zn)	1508243	WG3581393-2	84.6	90	ug	94.0	80-120	%		✓	Filter	Total Metals
Particulates (Filter)													
MB	Total particulate	1506121	WG3578459-1	<100		ug	-	<100	ug		✓	Filter	Particulates
MB	Total particulate	1512481	WG3587142-1	<15		ug	-	<15	ug		✓	Filter	Particulates
MB	Total particulate	1512481	WG3587142-2	<15		ug	-	<15	ug		✓	Filter	Particulates
Total Metals (Filter)													
MB	Arsenic (As)	1508243	WG3581393-1	<3.0		ug	-	<3.0	ug		✓	Filter	Total Metals
MB	Cadmium (Cd)	1508243	WG3581393-1	<0.027		ug	-	<0.027	ug		✓	Filter	Total Metals
MB	Chromium (Cr)	1508243	WG3581393-1	<3.4		ug	-	<3.4	ug		✓	Filter	Total Metals
MB	Cobalt (Co)	1508243	WG3581393-1	<0.030		ug	-	<0.030	ug		✓	Filter	Total Metals
MB	Copper (Cu)	1508243	WG3581393-1	<1.0		ug	-	<1.0	ug		✓	Filter	Total Metals
MB	Iron (Fe)	1508243	WG3581393-1	<12		ug	-	<12	ug		✓	Filter	Total Metals
MB	Lead (Pb)	1508243	WG3581393-1	<0.12		ug	-	<0.12	ug		✓	Filter	Total Metals
MB	Manganese (Mn)	1508243	WG3581393-1	<0.45		ug	-	<0.45	ug		✓	Filter	Total Metals
MB	Nickel (Ni)	1508243	WG3581393-1	<0.25		ug	-	<0.25	ug		✓	Filter	Total Metals
MB	Selenium (Se)	1508243	WG3581393-1	<1.3		ug	-	<1.3	ug		✓	Filter	Total Metals
MB	Vanadium (V)	1508243	WG3581393-1	<5.0		ug	-	<10.0	ug		✓	Filter	Total Metals
MB	Zinc (Zn)	1508243	WG3581393-1	<4.5		ug	-	<4.5	ug		✓	Filter	Total Metals
MS	Arsenic (As)	1508243	SOUTH-TSP-366	37.5	45.6	ug	82.1	75-125	%		✓	Filter	Total Metals
MS	Cadmium (Cd)	1508243	SOUTH-TSP-366	19.8	22.6	ug	87.6	75-125	%		✓	Filter	Total Metals
MS	Chromium (Cr)	1508243	SOUTH-TSP-366	41.2	48.2	ug	84.6	75-125	%		✓	Filter	Total Metals
MS	Cobalt (Co)	1508243	SOUTH-TSP-366	38.8	45.7	ug	84.6	75-125	%		✓	Filter	Total Metals
MS	Copper (Cu)	1508243	SOUTH-TSP-366	168	177	ug	N/A	-	%	MS-B		Filter	Total Metals
MS	Iron (Fe)	1508243	SOUTH-TSP-366	1630	1700	ug	N/A	-	%	MS-B		Filter	Total Metals
MS	Lead (Pb)	1508243	SOUTH-TSP-366	40.0	46.5	ug	85.4	75-125	%		✓	Filter	Total Metals
MS	Manganese (Mn)	1508243	SOUTH-TSP-366	85.1	89	ug	91.2	75-125	%		✓	Filter	Total Metals
MS	Nickel (Ni)	1508243	SOUTH-TSP-366	39.2	47	ug	82.7	75-125	%		✓	Filter	Total Metals
MS	Selenium (Se)	1508243	SOUTH-TSP-366	38.6	45.6	ug	84.4	75-125	%		✓	Filter	Total Metals
MS	Vanadium (V)	1508243	SOUTH-TSP-366	39.9	47.7	ug	82.6	75-125	%		✓	Filter	Total Metals
MS	Zinc (Zn)	1508243	SOUTH-TSP-366	94.1	112	ug	80.4	75-125	%		✓	Filter	Total Metals
Metals (Dustfall)													
LCS	Aluminum (Al)-Total	1513072	WG3587971-2	0.0598	0.0524	mg/dm2.day	114.2	80-120	%		✓	Dustfall	Metals
LCS	Aluminum (Al)-Total	1514612	WG3590018-2	0.0536	0.0524	mg/dm2.day	102.4	80-120	%		✓	Dustfall	Metals
LCS	Antimony (Sb)-Total	1513072	WG3587971-2	0.0284	0.0262	mg/dm2.day	108.2	80-120	%		✓	Dustfall	Metals
LCS	Antimony (Sb)-Total	1514612	WG3590018-2	0.0286	0.0262	mg/dm2.day	109.0	80-120	%		✓	Dustfall	Metals
LCS	Arsenic (As)-Total	1513072	WG3587971-2	0.0265	0.0262	mg/dm2.day	101.0	80-120	%		✓	Dustfall	Metals
LCS	Arsenic (As)-Total	1514612	WG3590018-2	0.0274	0.0262	mg/dm2.day	104.6	80-120	%		✓	Dustfall	Metals
LCS	Barium (Ba)-Total	1513072	WG3587971-2	0.00659	0.00655	mg/dm2.day	100.6	80-120	%		✓	Dustfall	Metals
LCS	Barium (Ba)-Total	1514612	WG3590018-2	0.00657	0.00655	mg/dm2.day	100.4	80-120	%		✓	Dustfall	Metals
LCS	Beryllium (Be)-Total	1513072	WG3587971-2	0.00282	0.00262	mg/dm2.day	107.8	80-120	%		✓	Dustfall	Metals
LCS	Beryllium (Be)-Total	1514612	WG3590018-2	0.00279	0.00262	mg/dm2.day	106.5	80-120	%		✓	Dustfall	Metals
LCS	Bismuth (Bi)-Total	1513072	WG3587971-2	0.0275	0.0262	mg/dm2.day	104.8	80-120	%		✓	Dustfall	Metals
LCS	Bismuth (Bi)-Total	1514612	WG3590018-2	0.0271	0.0262	mg/dm2.day	103.3	80-120	%		✓	Dustfall	Metals
LCS	Boron (B)-Total	1513072	WG3587971-2	0.0272	0.0262	mg/dm2.day	103.8	80-120	%		✓	Dustfall	Metals
LCS	Boron (B)-Total	1514612	WG3590018-2	0.0263	0.0262	mg/dm2.day	100.6	80-120	%		✓	Dustfall	Metals
LCS	Cadmium (Cd)-Total	1513072	WG3587971-2	0.00258	0.00262	mg/dm2.day	98.5	80-120	%		✓	Dustfall	Metals
LCS	Cadmium (Cd)-Total	1514612	WG3590018-2	0.00271	0.00262	mg/dm2.day	103.3	80-120	%		✓	Dustfall	Metals
LCS	Calcium (Ca)-Total	1513072	WG3587971-2	1.38	1.31	mg/dm2.day	105.0	80-120	%		✓	Dustfall	Metals
LCS	Calcium (Ca)-Total	1514612	WG3590018-2	1.35	1.31	mg/dm2.day	102.7	80-120	%		✓	Dustfall	Metals
LCS	Chromium (Cr)-Total	1513072	WG3587971-2	0.00690	0.00655	mg/dm2.day	105.3	80-120	%		✓	Dustfall	Metals
LCS	Chromium (Cr)-Total	1514612	WG3590018-2	0.00666	0.00655	mg/dm2.day	101.7	80-120	%		✓	Dustfall	Metals
LCS	Cobalt (Co)-Total	1513072	WG3587971-2	0.00659	0.00655	mg/dm2.day	100.6	80-120	%		✓	Dustfall	Metals
LCS	Cobalt (Co)-Total	1514612	WG3590018-2	0.00697	0.00655	mg/dm2.day	106.4	80-120	%		✓	Dustfall	Metals
LCS	Copper (Cu)-Total	1513072	WG3587971-2	0.00628	0.00655	mg/dm2.day	95.9	80-120	%		✓	Dustfall	Metals
LCS	Copper (Cu)-Total	1514612	WG3590018-2	0.00678	0.00655	mg/dm2.day	103.6	80-120	%		✓	Dustfall	Metals
LCS	Iron (Fe)-Total	1513072	WG3587971-2	0.0276	0.0262	mg/dm2.day	105.5	80-120	%		✓	Dustfall	Metals

Quality Control L2612385

Job Reference NEW GOLD RRP
Report To Sarah Flesher, New Gold Inc. Rainy River Project
Date Received 12-Jul-2021 10:00
Report Date 9-Aug-2021 14:35
Report Version 1

QC Type	Analyte	QC Lot #	ALS QC ID	Result	Target	Units	%	Limit	Units	Qual	Eval	Matrix	Class
LCS	Iron (Fe)-Total	1514612	WG3590018-2	0.0280	0.0262	mg/dm2.day	106.7	80-120	%		✓	Dustfall	Metals
LCS	Lead (Pb)-Total	1513072	WG3587971-2	0.0136	0.0131	mg/dm2.day	104.2	80-120	%		✓	Dustfall	Metals
LCS	Lead (Pb)-Total	1514612	WG3590018-2	0.0137	0.0131	mg/dm2.day	104.9	80-120	%		✓	Dustfall	Metals
LCS	Lithium (Li)-Total	1513072	WG3587971-2	0.00703	0.00655	mg/dm2.day	107.4	80-120	%		✓	Dustfall	Metals
LCS	Lithium (Li)-Total	1514612	WG3590018-2	0.00691	0.00655	mg/dm2.day	105.5	80-120	%		✓	Dustfall	Metals
LCS	Magnesium (Mg)-Total	1513072	WG3587971-2	1.37	1.31	mg/dm2.day	104.7	80-120	%		✓	Dustfall	Metals
LCS	Magnesium (Mg)-Total	1514612	WG3590018-2	1.35	1.31	mg/dm2.day	103.3	80-120	%		✓	Dustfall	Metals
LCS	Manganese (Mn)-Total	1513072	WG3587971-2	0.00681	0.00655	mg/dm2.day	104.0	80-120	%		✓	Dustfall	Metals
LCS	Manganese (Mn)-Total	1514612	WG3590018-2	0.00673	0.00655	mg/dm2.day	102.8	80-120	%		✓	Dustfall	Metals
LCS	Molybdenum (Mo)-Total	1513072	WG3587971-2	0.00705	0.00655	mg/dm2.day	107.6	80-120	%		✓	Dustfall	Metals
LCS	Molybdenum (Mo)-Total	1514612	WG3590018-2	0.00698	0.00655	mg/dm2.day	106.5	80-120	%		✓	Dustfall	Metals
LCS	Nickel (Ni)-Total	1513072	WG3587971-2	0.0128	0.0131	mg/dm2.day	97.8	80-120	%		✓	Dustfall	Metals
LCS	Nickel (Ni)-Total	1514612	WG3590018-2	0.0135	0.0131	mg/dm2.day	103.3	80-120	%		✓	Dustfall	Metals
LCS	Phosphorus (P)-Total	1513072	WG3587971-2	0.297	0.262	mg/dm2.day	113.2	80-120	%		✓	Dustfall	Metals
LCS	Phosphorus (P)-Total	1514612	WG3590018-2	0.290	0.262	mg/dm2.day	110.7	80-120	%		✓	Dustfall	Metals
LCS	Potassium (K)-Total	1513072	WG3587971-2	1.52	1.31	mg/dm2.day	115.9	80-120	%		✓	Dustfall	Metals
LCS	Potassium (K)-Total	1514612	WG3590018-2	1.43	1.31	mg/dm2.day	108.8	80-120	%		✓	Dustfall	Metals
LCS	Selenium (Se)-Total	1513072	WG3587971-2	0.0262	0.0262	mg/dm2.day	99.9	80-120	%		✓	Dustfall	Metals
LCS	Selenium (Se)-Total	1514612	WG3590018-2	0.0271	0.0262	mg/dm2.day	103.5	80-120	%		✓	Dustfall	Metals
LCS	Silicon (Si)-Total	1513072	WG3587971-2	0.274	0.262	mg/dm2.day	104.5	80-120	%		✓	Dustfall	Metals
LCS	Silicon (Si)-Total	1514612	WG3590018-2	0.265	0.262	mg/dm2.day	101.2	80-120	%		✓	Dustfall	Metals
LCS	Silver (Ag)-Total	1513072	WG3587971-2	0.00267	0.00262	mg/dm2.day	101.8	80-120	%		✓	Dustfall	Metals
LCS	Silver (Ag)-Total	1514612	WG3590018-2	0.00255	0.00262	mg/dm2.day	97.5	80-120	%		✓	Dustfall	Metals
LCS	Sodium (Na)-Total	1513072	WG3587971-2	1.43	1.31	mg/dm2.day	109.0	80-120	%		✓	Dustfall	Metals
LCS	Sodium (Na)-Total	1514612	WG3590018-2	1.45	1.31	mg/dm2.day	110.6	80-120	%		✓	Dustfall	Metals
LCS	Strontium (Sr)-Total	1513072	WG3587971-2	0.00675	0.00655	mg/dm2.day	103.0	80-120	%		✓	Dustfall	Metals
LCS	Strontium (Sr)-Total	1514612	WG3590018-2	0.00683	0.00655	mg/dm2.day	104.2	80-120	%		✓	Dustfall	Metals
LCS	Thallium (Tl)-Total	1513072	WG3587971-2	0.0257	0.0262	mg/dm2.day	98.2	80-120	%		✓	Dustfall	Metals
LCS	Thallium (Tl)-Total	1514612	WG3590018-2	0.0264	0.0262	mg/dm2.day	100.8	80-120	%		✓	Dustfall	Metals
LCS	Tin (Sn)-Total	1513072	WG3587971-2	0.0133	0.0131	mg/dm2.day	101.3	80-120	%		✓	Dustfall	Metals
LCS	Tin (Sn)-Total	1514612	WG3590018-2	0.0133	0.0131	mg/dm2.day	101.5	80-120	%		✓	Dustfall	Metals
LCS	Titanium (Ti)-Total	1513072	WG3587971-2	0.00675	0.00655	mg/dm2.day	103.1	80-120	%		✓	Dustfall	Metals
LCS	Titanium (Ti)-Total	1514612	WG3590018-2	0.00666	0.00655	mg/dm2.day	101.6	80-120	%		✓	Dustfall	Metals
LCS	Uranium (U)-Total	1513072	WG3587971-2	0.000134	0.000131	mg/dm2.day	102.4	80-120	%		✓	Dustfall	Metals
LCS	Uranium (U)-Total	1514612	WG3590018-2	0.000133	0.000131	mg/dm2.day	101.6	80-120	%		✓	Dustfall	Metals
LCS	Vanadium (V)-Total	1513072	WG3587971-2	0.0136	0.0131	mg/dm2.day	103.5	80-120	%		✓	Dustfall	Metals
LCS	Vanadium (V)-Total	1514612	WG3590018-2	0.0140	0.0131	mg/dm2.day	106.9	80-120	%		✓	Dustfall	Metals
LCS	Zinc (Zn)-Total	1513072	WG3587971-2	0.0135	0.0131	mg/dm2.day	102.7	80-120	%		✓	Dustfall	Metals
LCS	Zinc (Zn)-Total	1514612	WG3590018-2	0.0141	0.0131	mg/dm2.day	107.6	80-120	%		✓	Dustfall	Metals
Particulates (Dustfall)													
MB	Fixed Dustfall	1513811	WG3588879-1	<0.10		mg/dm2.day	-	<0.10	mg/dm2.day		✓	Dustfall	Particulates
MB	Volatile Dustfall	1513811	WG3588879-1	<0.10		mg/dm2.day	-	<0.10	mg/dm2.day		✓	Dustfall	Particulates
MB	Total Dustfall	1513811	WG3588879-1	<0.10		mg/dm2.day	-	<0.10	mg/dm2.day		✓	Dustfall	Particulates
MB	Fixed Insoluble Dustfall	1513811	WG3588879-1	<0.10		mg/dm2.day	-	<0.10	mg/dm2.day		✓	Dustfall	Particulates
MB	Volatile Insoluble Dustfall	1513811	WG3588879-1	<0.10		mg/dm2.day	-	<0.10	mg/dm2.day		✓	Dustfall	Particulates
MB	Total Insoluble Dustfall	1513811	WG3588879-1	<0.10		mg/dm2.day	-	<0.10	mg/dm2.day		✓	Dustfall	Particulates
MB	Fixed Soluble Dustfall	1513811	WG3588879-1	<0.10		mg/dm2.day	-	<0.10	mg/dm2.day		✓	Dustfall	Particulates
MB	Volatile Soluble Dustfall	1513811	WG3588879-1	<0.10		mg/dm2.day	-	<0.10	mg/dm2.day		✓	Dustfall	Particulates
MB	Total Soluble Dustfall	1513811	WG3588879-1	<0.10		mg/dm2.day	-	<0.10	mg/dm2.day		✓	Dustfall	Particulates
Metals (Dustfall)													
MB	Aluminum (Al)-Total	1513072	WG3587971-1	<0.000079		mg/dm2.day	-	<0.000079	mg/dm2.day		✓	Dustfall	Metals
MB	Aluminum (Al)-Total	1514612	WG3590018-1	<0.000079		mg/dm2.day	-	<0.000079	mg/dm2.day		✓	Dustfall	Metals
MB	Antimony (Sb)-Total	1513072	WG3587971-1	<0.0000026		mg/dm2.day	-	<0.0000026	mg/dm2.day		✓	Dustfall	Metals
MB	Antimony (Sb)-Total	1514612	WG3590018-1	<0.0000026		mg/dm2.day	-	<0.0000026	mg/dm2.day		✓	Dustfall	Metals
MB	Arsenic (As)-Total	1513072	WG3587971-1	<0.0000026		mg/dm2.day	-	<0.0000026	mg/dm2.day		✓	Dustfall	Metals
MB	Arsenic (As)-Total	1514612	WG3590018-1	<0.0000026		mg/dm2.day	-	<0.0000026	mg/dm2.day		✓	Dustfall	Metals
MB	Barium (Ba)-Total	1513072	WG3587971-1	0.0000018		mg/dm2.day	-	<0.0000013	mg/dm2.day	B	×	Dustfall	Metals
MB	Barium (Ba)-Total	1514612	WG3590018-1	<0.0000013		mg/dm2.day	-	<0.0000013	mg/dm2.day		✓	Dustfall	Metals
MB	Beryllium (Be)-Total	1513072	WG3587971-1	<0.000013		mg/dm2.day	-	<0.000013	mg/dm2.day		✓	Dustfall	Metals
MB	Beryllium (Be)-Total	1514612	WG3590018-1	<0.000013		mg/dm2.day	-	<0.000013	mg/dm2.day		✓	Dustfall	Metals
MB	Bismuth (Bi)-Total	1513072	WG3587971-1	<0.000013		mg/dm2.day	-	<0.000013	mg/dm2.day		✓	Dustfall	Metals
MB	Bismuth (Bi)-Total	1514612	WG3590018-1	<0.000013		mg/dm2.day	-	<0.000013	mg/dm2.day		✓	Dustfall	Metals
MB	Boron (B)-Total	1513072	WG3587971-1	<0.00026		mg/dm2.day	-	<0.00026	mg/dm2.day		✓	Dustfall	Metals
MB	Boron (B)-Total	1514612	WG3590018-1	<0.00026		mg/dm2.day	-	<0.00026	mg/dm2.day		✓	Dustfall	Metals
MB	Cadmium (Cd)-Total	1513072	WG3587971-1	<0.0000013		mg/dm2.day	-	<0.0000013	mg/dm2.day		✓	Dustfall	Metals
MB	Cadmium (Cd)-Total	1514612	WG3590018-1	<0.0000013		mg/dm2.day	-	<0.0000013	mg/dm2.day		✓	Dustfall	Metals
MB	Calcium (Ca)-Total	1513072	WG3587971-1	<0.00052		mg/dm2.day	-	<0.00052	mg/dm2.day		✓	Dustfall	Metals
MB	Calcium (Ca)-Total	1514612	WG3590018-1	<0.00052		mg/dm2.day	-	<0.00052	mg/dm2.day		✓	Dustfall	Metals
MB	Chromium (Cr)-Total	1513072	WG3587971-1	<0.000013		mg/dm2.day	-	<0.000013	mg/dm2.day		✓	Dustfall	Metals
MB	Chromium (Cr)-Total	1514612	WG3590018-1	<0.000013		mg/dm2.day	-	<0.000013	mg/dm2.day		✓	Dustfall	Metals

Quality Control L2612385

Job Reference NEW GOLD RRP
Report To Sarah Flesher, New Gold Inc. Rainy River Project
Date Received 12-Jul-2021 10:00
Report Date 9-Aug-2021 14:35
Report Version 1

QC Type	Analyte	QC Lot #	ALS QC ID	Result	Target	Units	%	Limit	Units	Qual	Eval	Matrix	Class
MB	Cobalt (Co)-Total	1513072	WG3587971-1	<0.0000026		mg/dm2.day	-	<0.0000026	mg/dm2.day		✓	Dustfall	Metals
MB	Cobalt (Co)-Total	1514612	WG3590018-1	<0.0000026		mg/dm2.day	-	<0.0000026	mg/dm2.day		✓	Dustfall	Metals
MB	Copper (Cu)-Total	1513072	WG3587971-1	0.000017		mg/dm2.day	-	<0.000013	mg/dm2.day	MB-LOR	✗	Dustfall	Metals
MB	Copper (Cu)-Total	1514612	WG3590018-1	<0.000013		mg/dm2.day	-	<0.000013	mg/dm2.day		✓	Dustfall	Metals
MB	Iron (Fe)-Total	1513072	WG3587971-1	<0.00079		mg/dm2.day	-	<0.00079	mg/dm2.day		✓	Dustfall	Metals
MB	Iron (Fe)-Total	1514612	WG3590018-1	<0.00079		mg/dm2.day	-	<0.00079	mg/dm2.day		✓	Dustfall	Metals
MB	Lead (Pb)-Total	1513072	WG3587971-1	<0.0000013		mg/dm2.day	-	<0.0000013	mg/dm2.day		✓	Dustfall	Metals
MB	Lead (Pb)-Total	1514612	WG3590018-1	<0.0000013		mg/dm2.day	-	<0.0000013	mg/dm2.day		✓	Dustfall	Metals
MB	Lithium (Li)-Total	1513072	WG3587971-1	<0.00013		mg/dm2.day	-	<0.00013	mg/dm2.day		✓	Dustfall	Metals
MB	Lithium (Li)-Total	1514612	WG3590018-1	<0.00013		mg/dm2.day	-	<0.00013	mg/dm2.day		✓	Dustfall	Metals
MB	Magnesium (Mg)-Total	1513072	WG3587971-1	<0.00013		mg/dm2.day	-	<0.00013	mg/dm2.day		✓	Dustfall	Metals
MB	Magnesium (Mg)-Total	1514612	WG3590018-1	<0.00013		mg/dm2.day	-	<0.00013	mg/dm2.day		✓	Dustfall	Metals
MB	Manganese (Mn)-Total	1513072	WG3587971-1	<0.0000026		mg/dm2.day	-	<0.0000026	mg/dm2.day		✓	Dustfall	Metals
MB	Manganese (Mn)-Total	1514612	WG3590018-1	<0.0000026		mg/dm2.day	-	<0.0000026	mg/dm2.day		✓	Dustfall	Metals
MB	Molybdenum (Mo)-Total	1513072	WG3587971-1	<0.0000013		mg/dm2.day	-	<0.0000013	mg/dm2.day		✓	Dustfall	Metals
MB	Molybdenum (Mo)-Total	1514612	WG3590018-1	<0.0000013		mg/dm2.day	-	<0.0000013	mg/dm2.day		✓	Dustfall	Metals
MB	Nickel (Ni)-Total	1513072	WG3587971-1	<0.000013		mg/dm2.day	-	<0.000013	mg/dm2.day		✓	Dustfall	Metals
MB	Nickel (Ni)-Total	1514612	WG3590018-1	<0.000013		mg/dm2.day	-	<0.000013	mg/dm2.day		✓	Dustfall	Metals
MB	Phosphorus (P)-Total	1513072	WG3587971-1	<0.0013		mg/dm2.day	-	<0.0013	mg/dm2.day		✓	Dustfall	Metals
MB	Phosphorus (P)-Total	1514612	WG3590018-1	<0.0013		mg/dm2.day	-	<0.0013	mg/dm2.day		✓	Dustfall	Metals
MB	Potassium (K)-Total	1513072	WG3587971-1	<0.0013		mg/dm2.day	-	<0.0013	mg/dm2.day		✓	Dustfall	Metals
MB	Potassium (K)-Total	1514612	WG3590018-1	<0.0013		mg/dm2.day	-	<0.0013	mg/dm2.day		✓	Dustfall	Metals
MB	Selenium (Se)-Total	1513072	WG3587971-1	<0.000026		mg/dm2.day	-	<0.000026	mg/dm2.day		✓	Dustfall	Metals
MB	Selenium (Se)-Total	1514612	WG3590018-1	<0.000026		mg/dm2.day	-	<0.000026	mg/dm2.day		✓	Dustfall	Metals
MB	Silicon (Si)-Total	1513072	WG3587971-1	<0.0013		mg/dm2.day	-	<0.0013	mg/dm2.day		✓	Dustfall	Metals
MB	Silicon (Si)-Total	1514612	WG3590018-1	<0.0013		mg/dm2.day	-	<0.0013	mg/dm2.day		✓	Dustfall	Metals
MB	Silver (Ag)-Total	1513072	WG3587971-1	<0.00000026		mg/dm2.day	-	<0.00000026	mg/dm2.day		✓	Dustfall	Metals
MB	Silver (Ag)-Total	1514612	WG3590018-1	<0.00000026		mg/dm2.day	-	<0.00000026	mg/dm2.day		✓	Dustfall	Metals
MB	Sodium (Na)-Total	1513072	WG3587971-1	<0.0013		mg/dm2.day	-	<0.0013	mg/dm2.day		✓	Dustfall	Metals
MB	Sodium (Na)-Total	1514612	WG3590018-1	<0.0013		mg/dm2.day	-	<0.0013	mg/dm2.day		✓	Dustfall	Metals
MB	Strontium (Sr)-Total	1513072	WG3587971-1	<0.0000026		mg/dm2.day	-	<0.0000026	mg/dm2.day		✓	Dustfall	Metals
MB	Strontium (Sr)-Total	1514612	WG3590018-1	<0.0000026		mg/dm2.day	-	<0.0000026	mg/dm2.day		✓	Dustfall	Metals
MB	Thallium (Tl)-Total	1513072	WG3587971-1	<0.0000026		mg/dm2.day	-	<0.0000026	mg/dm2.day		✓	Dustfall	Metals
MB	Thallium (Tl)-Total	1514612	WG3590018-1	<0.0000026		mg/dm2.day	-	<0.0000026	mg/dm2.day		✓	Dustfall	Metals
MB	Tin (Sn)-Total	1513072	WG3587971-1	<0.0000026		mg/dm2.day	-	<0.0000026	mg/dm2.day		✓	Dustfall	Metals
MB	Tin (Sn)-Total	1514612	WG3590018-1	<0.0000026		mg/dm2.day	-	<0.0000026	mg/dm2.day		✓	Dustfall	Metals
MB	Titanium (Ti)-Total	1513072	WG3587971-1	<0.00026		mg/dm2.day	-	<0.00026	mg/dm2.day		✓	Dustfall	Metals
MB	Titanium (Ti)-Total	1514612	WG3590018-1	<0.00026		mg/dm2.day	-	<0.00026	mg/dm2.day		✓	Dustfall	Metals
MB	Uranium (U)-Total	1513072	WG3587971-1	<0.00000026		mg/dm2.day	-	<0.00000026	mg/dm2.day		✓	Dustfall	Metals
MB	Uranium (U)-Total	1514612	WG3590018-1	<0.00000026		mg/dm2.day	-	<0.00000026	mg/dm2.day		✓	Dustfall	Metals
MB	Vanadium (V)-Total	1513072	WG3587971-1	<0.000026		mg/dm2.day	-	<0.000026	mg/dm2.day		✓	Dustfall	Metals
MB	Vanadium (V)-Total	1514612	WG3590018-1	<0.000026		mg/dm2.day	-	<0.000026	mg/dm2.day		✓	Dustfall	Metals
MB	Zinc (Zn)-Total	1513072	WG3587971-1	<0.000079		mg/dm2.day	-	<0.000079	mg/dm2.day		✓	Dustfall	Metals
MB	Zinc (Zn)-Total	1514612	WG3590018-1	<0.000079		mg/dm2.day	-	<0.000079	mg/dm2.day		✓	Dustfall	Metals

Qualifier Legend

B	Method Blank exceeds ALS DQO. Associated sample results which are < Limit of Reporting or > 5 times blank level are considered reliable.
MB-LOR	Method Blank exceeds ALS DQO. Limits of Reporting have been adjusted for samples with positive hits below 5x blank level.
MS-B	Matrix Spike recovery could not be accurately calculated due to high analyte background in sample.

Evaluation Legend

✓	QC Lot met ALS Data Quality Objectives
✗	QC Lot did not meet ALS Data Quality Objectives

Methodology L2612385

Job Reference NEW GOLD RRP
Report To Sarah Flesher, New Gold Inc. Rainy River Project

Date Received 12-Jul-2021 10:00
Report Date 9-Aug-2021 14:35
Report Version 1

ALS Test Code	ALS Test Description	Lab Location	Matrix	Method Reference	Methodology Description
Particulates (Dustfall)					
DUSTFALLS-ALL-DM2-VA	Dustfalls-Total, Soluble, Insoluble +FV	Vancouver	Dustfall	BC LAB MANUAL - PARTICULATE	This analysis is carried out using procedures modified from British Columbia Environmental Manual "Particulate." Particulates or "Dustfalls" are determined gravimetrically. Total Insoluble and Soluble Dustfalls are determined by filtering a sample through a 0.45 um membrane filter and drying the filter and filtrate at 104 C, followed by ignition at 550 C. The remaining residue after 550 C represents the fixed portion and the weight lost on ignition represents the volatile portion. The sum of all fixed and volatile portions on both Insoluble and Soluble portions represents Total Dustfalls.
PART-HIVOL-GRAV-BU	Particulate on High Volume Filter	Burlington	Filter	USEPA IO3.1	
PART-M212 F-GRAV-BU	PM via Gravimetric Analysis	Burlington	Filter	EPA QA Guidance Document 2.12	The particulate matter collected onto tare-weighed 47mm Teflon Disc filter media is desiccated then brought to a constant weight on an analytical balance. Results are presented in ug (per filter). An air volume can be included to allow for reporting in ug/m3.
Particulates (Filter)					
DUSTFALLS-ALL-DM2-VA	Dustfalls-Total, Soluble, Insoluble +FV	Vancouver	Dustfall	BC LAB MANUAL - PARTICULATE	This analysis is carried out using procedures modified from British Columbia Environmental Manual "Particulate." Particulates or "Dustfalls" are determined gravimetrically. Total Insoluble and Soluble Dustfalls are determined by filtering a sample through a 0.45 um membrane filter and drying the filter and filtrate at 104 C, followed by ignition at 550 C. The remaining residue after 550 C represents the fixed portion and the weight lost on ignition represents the volatile portion. The sum of all fixed and volatile portions on both Insoluble and Soluble portions represents Total Dustfalls.
PART-HIVOL-GRAV-BU	Particulate on High Volume Filter	Burlington	Filter	USEPA IO3.1	
PART-M212 F-GRAV-BU	PM via Gravimetric Analysis	Burlington	Filter	EPA QA Guidance Document 2.12	The particulate matter collected onto tare-weighed 47mm Teflon Disc filter media is desiccated then brought to a constant weight on an analytical balance. Results are presented in ug (per filter). An air volume can be included to allow for reporting in ug/m3.
Metals (Dustfall)					
MET-DUST(DM2)-MS-VA	Total Metals in Dustfalls by ICPMS	Vancouver	Dustfall	EPA 6020A	This analysis is carried out using procedures adapted from "Standard Methods for the Examination of Water and Wastewater" published by the American Public Health Association, and with procedures adapted from "Test Methods for Evaluating Solid Waste" SW-846 published by the United States Environmental Protection Agency (EPA). Instrumental analysis is by inductively coupled plasma - mass spectrometry (EPA Method 6020A).
Total Metals (Filter)					
MET-IO3.5-MS-BU	Metals on High Volume Filter by ICPMS	Burlington	Filter	IO3.5	After weighing (if required), hivol filters are sub-sampled and leached with nitric acid to extract available metal analytes. After dilution, the extracts are submitted to the ICPMS instrument for analysis.

Detection Limits L2612385

Job Reference NEW GOLD RRP
Report To Sarah Flesher, New Gold Inc. Rainy River Project
Date Received 12-Jul-2021 10:00
Report Date 9-Aug-2021 14:35
Report Version 1

Client Sample ID		SOUTH-TSP-366	SOUTH-TSP-367	SOUTH-TSP-368	SOUTH-TSP-369	SOUTH-TSP-370	SOUTH-TSP-371	NORTH-TSP-366	NORTH-TSP-367	NORTH-TSP-368	NORTH-TSP-369	NORTH-TSP-370	NORTH-TSP-371
Date Sampled		3-Jun-2021	9-Jun-2021	15-Jun-2021	21-Jun-2021	27-Jun-2021	3-Jul-2021	3-Jun-2021	9-Jun-2021	15-Jun-2021	21-Jun-2021	27-Jun-2021	3-Jul-2021
Time Sampled		0:00	0:00	0:00	0:00	0:00	0:00	0:00	0:00	0:00	0:00	0:00	0:00
ALS Sample ID		L2612385-1	L2612385-2	L2612385-3	L2612385-4	L2612385-5	L2612385-6	L2612385-7	L2612385-8	L2612385-9	L2612385-10	L2612385-11	L2612385-12
Parameter	Units	Filter	Filter	Filter	Filter	Filter	Filter	Filter	Filter	Filter	Filter	Filter	Filter
Particulates (Filter)													
Total particulate	ug	2300	2300	2300	2300	2300	2300	2300	2300	2300	2300	2300	2300
Total Metals (Filter)													
Arsenic (As)	ug	3.0	3.0	3.0	3.0	3.0	3.0	3.0	3.0	3.0	3.0	3.0	3.0
Cadmium (Cd)	ug	2.0	2.0	2.0	2.0	2.0	2.0	2.0	2.0	2.0	2.0	2.0	2.0
Chromium (Cr)	ug	5.0	5.0	5.0	5.0	5.0	5.0	5.0	5.0	5.0	5.0	5.0	5.0
Cobalt (Co)	ug	2.0	2.0	2.0	2.0	2.0	2.0	2.0	2.0	2.0	2.0	2.0	2.0
Copper (Cu)	ug	4.0	4.0	4.0	4.0	4.0	4.0	4.0	4.0	4.0	4.0	4.0	4.0
Iron (Fe)	ug	20	20	20	20	20	20	20	20	20	20	20	20
Lead (Pb)	ug	3.0	3.0	3.0	3.0	3.0	3.0	3.0	3.0	3.0	3.0	3.0	3.0
Manganese (Mn)	ug	1.0	1.0	1.0	1.0	1.0	1.0	1.0	1.0	1.0	1.0	1.0	1.0
Nickel (Ni)	ug	3.0	3.0	3.0	3.0	3.0	3.0	3.0	3.0	3.0	3.0	3.0	3.0
Selenium (Se)	ug	10	10	10	10	10	10	10	10	10	10	10	10
Vanadium (V)	ug	5.0	5.0	5.0	5.0	5.0	5.0	5.0	5.0	5.0	5.0	5.0	5.0
Zinc (Zn)	ug	5.0	5.0	5.0	5.0	5.0	5.0	5.0	5.0	5.0	5.0	5.0	5.0

Particulates (Dustfall)

Detection Limits L2612385

Job Reference NEW GOLD RRP
Report To Sarah Flesher, New Gold
Date Received 12-Jul-2021 10:00
Report Date 9-Aug-2021 14:35
Report Version 1

Client Sample ID		NORTHWEST-TSP-366	NORTHWEST-TSP-367	NORTHWEST-TSP-368	NORTHWEST-TSP-369	NORTHWEST-TSP-370	NORTHWEST-TSP-371	TSP-TRAVEL BLANK	SOUTH-PM2.5-366	SOUTH-PM2.5-367	SOUTH-PM2.5-368	SOUTH-PM2.5-369	SOUTH-PM2.5-370	SOUTH-PM2.5-371
Date Sampled		3-Jun-2021	9-Jun-2021	15-Jun-2021	21-Jun-2021	27-Jun-2021	3-Jul-2021	7-Jul-2021	3-Jun-2021	9-Jun-2021	15-Jun-2021	21-Jun-2021	27-Jun-2021	3-Jul-2021
Time Sampled		0:00	0:00	0:00	0:00	0:00	0:00	0:00	0:00	0:00	0:00	0:00	0:00	0:00
ALS Sample ID		L2612385-13	L2612385-14	L2612385-15	L2612385-16	L2612385-17	L2612385-18	L2612385-19	L2612385-20	L2612385-21	L2612385-22	L2612385-23	L2612385-24	L2612385-25
Parameter	Units	Filter	Filter	Filter	Filter	Filter	Filter	Filter	Filter	Filter	Filter	Filter	Filter	Filter
Particulates (Filter)														
Total particulate	ug	2300	2300	2300	2300	2300	2300	2300	15	15	15	15	15	15
Total Metals (Filter)														
Arsenic (As)	ug	3.0	3.0	3.0	3.0	3.0	3.0	3.0						
Cadmium (Cd)	ug	2.0	2.0	2.0	2.0	2.0	2.0	2.0						
Chromium (Cr)	ug	5.0	5.0	5.0	5.0	5.0	5.0	5.0						
Cobalt (Co)	ug	2.0	2.0	2.0	2.0	2.0	2.0	2.0						
Copper (Cu)	ug	4.0	4.0	4.0	4.0	4.0	4.0	4.0						
Iron (Fe)	ug	20	20	20	20	20	20	20						
Lead (Pb)	ug	3.0	3.0	3.0	3.0	3.0	3.0	3.0						
Manganese (Mn)	ug	1.0	1.0	1.0	1.0	1.0	1.0	1.0						
Nickel (Ni)	ug	3.0	3.0	3.0	3.0	3.0	3.0	3.0						
Selenium (Se)	ug	10	10	10	10	10	10	10						
Vanadium (V)	ug	5.0	5.0	5.0	5.0	5.0	5.0	5.0						
Zinc (Zn)	ug	5.0	5.0	5.0	5.0	5.0	5.0	5.0						

Particulates (Dustfall)

Detection Limits L2612385

Job Reference NEW GOLD RRP
Report To Sarah Flesher, New Gold
Date Received 12-Jul-2021 10:00
Report Date 9-Aug-2021 14:35
Report Version 1

Client Sample ID		NORTH-PM2.5-366	NORTH-PM2.5-367	NORTH-PM2.5-368	NORTH-PM2.5-369	NORTH-PM2.5-370	NORTH-PM2.5-371	NORTHWEST-PM2.5-366	NORTHWEST-PM2.5-367	NORTHWEST-PM2.5-368	NORTHWEST-PM2.5-369	NORTHWEST-PM2.5-370	NORTHWEST-PM2.5-371	PM2.5-TRAVEL BLANK
Date Sampled		3-Jun-2021	9-Jun-2021	15-Jun-2021	21-Jun-2021	27-Jun-2021	3-Jul-2021	3-Jun-2021	9-Jun-2021	15-Jun-2021	21-Jun-2021	27-Jun-2021	3-Jul-2021	7-Jul-2021
Time Sampled		0:00	0:00	0:00	0:00	0:00	0:00	0:00	0:00	0:00	0:00	0:00	0:00	0:00
ALS Sample ID		L2612385-26	L2612385-27	L2612385-28	L2612385-29	L2612385-30	L2612385-31	L2612385-32	L2612385-33	L2612385-34	L2612385-35	L2612385-36	L2612385-37	L2612385-38
Parameter	Units	Filter	Filter	Filter	Filter	Filter	Filter	Filter	Filter	Filter	Filter	Filter	Filter	Filter
Particulates (Filter)														
Total particulate	ug	15	15	15	15	15	15	15	15	15	15	15	15	15
Total Metals (Filter)														
Arsenic (As)	ug													
Cadmium (Cd)	ug													
Chromium (Cr)	ug													
Cobalt (Co)	ug													
Copper (Cu)	ug													
Iron (Fe)	ug													
Lead (Pb)	ug													
Manganese (Mn)	ug													
Nickel (Ni)	ug													
Selenium (Se)	ug													
Vanadium (V)	ug													
Zinc (Zn)	ug													

Particulates (Dustfall)

Detection Limits L2612385

Job Reference NEW GOLD RRP
Report To Sarah Flesher, New Gold
Date Received 12-Jul-2021 10:00
Report Date 9-Aug-2021 14:35
Report Version 1

Client Sample ID		NOP1-DUSTFALL-6	CP1-DUSTFALL-6	WCP1-DUSTFALL-6	GH1-DUSTFALL-6	SPP1-DUSTFALL-25	SPP1-DUSTFALL-26	SPP1-DUSTFALL-27	SPP1-DUSTFALL-28	DUSTFALL-GALLINGER ROAD	DUSTFALL-TAIT ROAD (SOUTH)	DUSTFALL-NORTHWEST
Date Sampled		30-Jun-2021	2-Jul-2021	2-Jul-2021	2-Jul-2021	9-Jun-2021	16-Jun-2021	23-Jun-2021	30-Jun-2021	30-Jun-2021	30-Jun-2021	30-Jun-2021
Time Sampled		0:00	0:00	0:00	0:00	0:00	0:00	0:00	0:00	0:00	0:00	0:00
ALS Sample ID		L2612385-39	L2612385-40	L2612385-41	L2612385-42	L2612385-43	L2612385-44	L2612385-45	L2612385-46	L2612385-47	L2612385-48	L2612385-49
Parameter	Units	Dustfall	Dustfall	Dustfall	Dustfall	Dustfall	Dustfall	Dustfall	Dustfall	Dustfall	Dustfall	Dustfall
Particulates (Filter)												
Total particulate	ug											
Total Metals (Filter)												
Arsenic (As)	ug											
Cadmium (Cd)	ug											
Chromium (Cr)	ug											
Cobalt (Co)	ug											
Copper (Cu)	ug											
Iron (Fe)	ug											
Lead (Pb)	ug											
Manganese (Mn)	ug											
Nickel (Ni)	ug											
Selenium (Se)	ug											
Vanadium (V)	ug											
Zinc (Zn)	ug											
Particulates (Dustfall)												

Detection Limits L2612385

Job Reference NEW GOLD RRP
Report To Sarah Flesher, New Gold Inc. Rainy River Project
Date Received 12-Jul-2021 10:00
Report Date 9-Aug-2021 14:35
Report Version 1

Client Sample ID		SOUTH-TSP-366	SOUTH-TSP-367	SOUTH-TSP-368	SOUTH-TSP-369	SOUTH-TSP-370	SOUTH-TSP-371	NORTH-TSP-366	NORTH-TSP-367	NORTH-TSP-368	NORTH-TSP-369	NORTH-TSP-370	NORTH-TSP-371
Date Sampled		3-Jun-2021	9-Jun-2021	15-Jun-2021	21-Jun-2021	27-Jun-2021	3-Jul-2021	3-Jun-2021	9-Jun-2021	15-Jun-2021	21-Jun-2021	27-Jun-2021	3-Jul-2021
Time Sampled		0:00	0:00	0:00	0:00	0:00	0:00	0:00	0:00	0:00	0:00	0:00	0:00
ALS Sample ID		L2612385-1	L2612385-2	L2612385-3	L2612385-4	L2612385-5	L2612385-6	L2612385-7	L2612385-8	L2612385-9	L2612385-10	L2612385-11	L2612385-12
Parameter	Units	Filter	Filter	Filter	Filter	Filter	Filter	Filter	Filter	Filter	Filter	Filter	Filter
Fixed Dustfall	mg/dm2.day												
Volatile Dustfall	mg/dm2.day												
Total Dustfall	mg/dm2.day												
Fixed Insoluble Dustfall	mg/dm2.day												
Volatile Insoluble Dustfall	mg/dm2.day												
Total Insoluble Dustfall	mg/dm2.day												
Fixed Soluble Dustfall	mg/dm2.day												
Volatile Soluble Dustfall	mg/dm2.day												
Total Soluble Dustfall	mg/dm2.day												
Metals (Dustfall)													
Aluminum (Al)-Total	mg/dm2.day												
Antimony (Sb)-Total	mg/dm2.day												
Arsenic (As)-Total	mg/dm2.day												
Barium (Ba)-Total	mg/dm2.day												
Beryllium (Be)-Total	mg/dm2.day												
Bismuth (Bi)-Total	mg/dm2.day												
Boron (B)-Total	mg/dm2.day												
Cadmium (Cd)-Total	mg/dm2.day												
Calcium (Ca)-Total	mg/dm2.day												
Chromium (Cr)-Total	mg/dm2.day												
Cobalt (Co)-Total	mg/dm2.day												
Copper (Cu)-Total	mg/dm2.day												
Iron (Fe)-Total	mg/dm2.day												
Lead (Pb)-Total	mg/dm2.day												
Lithium (Li)-Total	mg/dm2.day												
Magnesium (Mg)-Total	mg/dm2.day												
Manganese (Mn)-Total	mg/dm2.day												
Molybdenum (Mo)-Total	mg/dm2.day												
Nickel (Ni)-Total	mg/dm2.day												
Phosphorus (P)-Total	mg/dm2.day												
Potassium (K)-Total	mg/dm2.day												
Selenium (Se)-Total	mg/dm2.day												
Silicon (Si)-Total	mg/dm2.day												
Silver (Ag)-Total	mg/dm2.day												
Sodium (Na)-Total	mg/dm2.day												
Strontium (Sr)-Total	mg/dm2.day												
Thallium (Tl)-Total	mg/dm2.day												
Tin (Sn)-Total	mg/dm2.day												
Titanium (Ti)-Total	mg/dm2.day												
Uranium (U)-Total	mg/dm2.day												
Vanadium (V)-Total	mg/dm2.day												
Zinc (Zn)-Total	mg/dm2.day												

Detection Limits L2612385

Job Reference NEW GOLD RRP
Report To Sarah Flesher, New Gold
Date Received 12-Jul-2021 10:00
Report Date 9-Aug-2021 14:35
Report Version 1

Client Sample ID		NORTHWEST-TSP-366	NORTHWEST-TSP-367	NORTHWEST-TSP-368	NORTHWEST-TSP-369	NORTHWEST-TSP-370	NORTHWEST-TSP-371	TSP-TRAVEL BLANK	SOUTH-PM2.5-366	SOUTH-PM2.5-367	SOUTH-PM2.5-368	SOUTH-PM2.5-369	SOUTH-PM2.5-370	SOUTH-PM2.5-371
Date Sampled		3-Jun-2021	9-Jun-2021	15-Jun-2021	21-Jun-2021	27-Jun-2021	3-Jul-2021	7-Jul-2021	3-Jun-2021	9-Jun-2021	15-Jun-2021	21-Jun-2021	27-Jun-2021	3-Jul-2021
Time Sampled		0:00	0:00	0:00	0:00	0:00	0:00	0:00	0:00	0:00	0:00	0:00	0:00	0:00
ALS Sample ID		L2612385-13	L2612385-14	L2612385-15	L2612385-16	L2612385-17	L2612385-18	L2612385-19	L2612385-20	L2612385-21	L2612385-22	L2612385-23	L2612385-24	L2612385-25
Parameter	Units	Filter	Filter	Filter	Filter	Filter	Filter	Filter	Filter	Filter	Filter	Filter	Filter	Filter
Fixed Dustfall	mg/dm2.day													
Volatile Dustfall	mg/dm2.day													
Total Dustfall	mg/dm2.day													
Fixed Insoluble Dustfall	mg/dm2.day													
Volatile Insoluble Dustfall	mg/dm2.day													
Total Insoluble Dustfall	mg/dm2.day													
Fixed Soluble Dustfall	mg/dm2.day													
Volatile Soluble Dustfall	mg/dm2.day													
Total Soluble Dustfall	mg/dm2.day													
Metals (Dustfall)														
Aluminum (Al)-Total	mg/dm2.day													
Antimony (Sb)-Total	mg/dm2.day													
Arsenic (As)-Total	mg/dm2.day													
Barium (Ba)-Total	mg/dm2.day													
Beryllium (Be)-Total	mg/dm2.day													
Bismuth (Bi)-Total	mg/dm2.day													
Boron (B)-Total	mg/dm2.day													
Cadmium (Cd)-Total	mg/dm2.day													
Calcium (Ca)-Total	mg/dm2.day													
Chromium (Cr)-Total	mg/dm2.day													
Cobalt (Co)-Total	mg/dm2.day													
Copper (Cu)-Total	mg/dm2.day													
Iron (Fe)-Total	mg/dm2.day													
Lead (Pb)-Total	mg/dm2.day													
Lithium (Li)-Total	mg/dm2.day													
Magnesium (Mg)-Total	mg/dm2.day													
Manganese (Mn)-Total	mg/dm2.day													
Molybdenum (Mo)-Total	mg/dm2.day													
Nickel (Ni)-Total	mg/dm2.day													
Phosphorus (P)-Total	mg/dm2.day													
Potassium (K)-Total	mg/dm2.day													
Selenium (Se)-Total	mg/dm2.day													
Silicon (Si)-Total	mg/dm2.day													
Silver (Ag)-Total	mg/dm2.day													
Sodium (Na)-Total	mg/dm2.day													
Strontium (Sr)-Total	mg/dm2.day													
Thallium (Tl)-Total	mg/dm2.day													
Tin (Sn)-Total	mg/dm2.day													
Titanium (Ti)-Total	mg/dm2.day													
Uranium (U)-Total	mg/dm2.day													
Vanadium (V)-Total	mg/dm2.day													
Zinc (Zn)-Total	mg/dm2.day													

Detection Limits L2612385

Job Reference NEW GOLD RRP
Report To Sarah Flesher, New Gold
Date Received 12-Jul-2021 10:00
Report Date 9-Aug-2021 14:35
Report Version 1

Client Sample ID		NORTH-PM2.5-366	NORTH-PM2.5-367	NORTH-PM2.5-368	NORTH-PM2.5-369	NORTH-PM2.5-370	NORTH-PM2.5-371	NORTHWEST-PM2.5-366	NORTHWEST-PM2.5-367	NORTHWEST-PM2.5-368	NORTHWEST-PM2.5-369	NORTHWEST-PM2.5-370	NORTHWEST-PM2.5-371	PM2.5-TRAVEL BLANK
Date Sampled		3-Jun-2021	9-Jun-2021	15-Jun-2021	21-Jun-2021	27-Jun-2021	3-Jul-2021	3-Jun-2021	9-Jun-2021	15-Jun-2021	21-Jun-2021	27-Jun-2021	3-Jul-2021	7-Jul-2021
Time Sampled		0:00	0:00	0:00	0:00	0:00	0:00	0:00	0:00	0:00	0:00	0:00	0:00	0:00
ALS Sample ID		L2612385-26	L2612385-27	L2612385-28	L2612385-29	L2612385-30	L2612385-31	L2612385-32	L2612385-33	L2612385-34	L2612385-35	L2612385-36	L2612385-37	L2612385-38
Parameter	Units	Filter	Filter	Filter	Filter	Filter	Filter	Filter	Filter	Filter	Filter	Filter	Filter	Filter
Fixed Dustfall	mg/dm2.day													
Volatile Dustfall	mg/dm2.day													
Total Dustfall	mg/dm2.day													
Fixed Insoluble Dustfall	mg/dm2.day													
Volatile Insoluble Dustfall	mg/dm2.day													
Total Insoluble Dustfall	mg/dm2.day													
Fixed Soluble Dustfall	mg/dm2.day													
Volatile Soluble Dustfall	mg/dm2.day													
Total Soluble Dustfall	mg/dm2.day													
Metals (Dustfall)														
Aluminum (Al)-Total	mg/dm2.day													
Antimony (Sb)-Total	mg/dm2.day													
Arsenic (As)-Total	mg/dm2.day													
Barium (Ba)-Total	mg/dm2.day													
Beryllium (Be)-Total	mg/dm2.day													
Bismuth (Bi)-Total	mg/dm2.day													
Boron (B)-Total	mg/dm2.day													
Cadmium (Cd)-Total	mg/dm2.day													
Calcium (Ca)-Total	mg/dm2.day													
Chromium (Cr)-Total	mg/dm2.day													
Cobalt (Co)-Total	mg/dm2.day													
Copper (Cu)-Total	mg/dm2.day													
Iron (Fe)-Total	mg/dm2.day													
Lead (Pb)-Total	mg/dm2.day													
Lithium (Li)-Total	mg/dm2.day													
Magnesium (Mg)-Total	mg/dm2.day													
Manganese (Mn)-Total	mg/dm2.day													
Molybdenum (Mo)-Total	mg/dm2.day													
Nickel (Ni)-Total	mg/dm2.day													
Phosphorus (P)-Total	mg/dm2.day													
Potassium (K)-Total	mg/dm2.day													
Selenium (Se)-Total	mg/dm2.day													
Silicon (Si)-Total	mg/dm2.day													
Silver (Ag)-Total	mg/dm2.day													
Sodium (Na)-Total	mg/dm2.day													
Strontium (Sr)-Total	mg/dm2.day													
Thallium (Tl)-Total	mg/dm2.day													
Tin (Sn)-Total	mg/dm2.day													
Titanium (Ti)-Total	mg/dm2.day													
Uranium (U)-Total	mg/dm2.day													
Vanadium (V)-Total	mg/dm2.day													
Zinc (Zn)-Total	mg/dm2.day													

Detection Limits L2612385

Job Reference NEW GOLD RRP
Report To Sarah Flesher, New Gold
Date Received 12-Jul-2021 10:00
Report Date 9-Aug-2021 14:35
Report Version 1

Client Sample ID		NOP1-DUSTFALL-6	CP1-DUSTFALL-6	WCP1-DUSTFALL-6	GH1-DUSTFALL-6	SPP1-DUSTFALL-25	SPP1-DUSTFALL-26	SPP1-DUSTFALL-27	SPP1-DUSTFALL-28	DUSTFALL-GALLINGER ROAD	DUSTFALL-TAIT ROAD (SOUTH)	DUSTFALL-NORTHWEST
Date Sampled		30-Jun-2021	2-Jul-2021	2-Jul-2021	2-Jul-2021	9-Jun-2021	16-Jun-2021	23-Jun-2021	30-Jun-2021	30-Jun-2021	30-Jun-2021	30-Jun-2021
Time Sampled		0:00	0:00	0:00	0:00	0:00	0:00	0:00	0:00	0:00	0:00	0:00
ALS Sample ID		L2612385-39	L2612385-40	L2612385-41	L2612385-42	L2612385-43	L2612385-44	L2612385-45	L2612385-46	L2612385-47	L2612385-48	L2612385-49
Parameter	Units	Dustfall	Dustfall	Dustfall	Dustfall	Dustfall	Dustfall	Dustfall	Dustfall	Dustfall	Dustfall	Dustfall
Fixed Dustfall	mg/dm2.day	0.10	0.10	0.10	0.10	0.21	0.43	0.43	0.43	0.10	0.10	0.10
Volatile Dustfall	mg/dm2.day	0.10	0.10	0.10	0.10	0.21	0.43	0.43	0.43	0.10	0.10	0.10
Total Dustfall	mg/dm2.day	0.10	0.10	0.10	0.10	0.21	0.43	0.43	0.43	0.10	0.10	0.10
Fixed Insoluble Dustfall	mg/dm2.day	0.10	0.10	0.10	0.10	0.21	0.43	0.43	0.43	0.10	0.10	0.10
Volatile Insoluble Dustfall	mg/dm2.day	0.10	0.10	0.10	0.10	0.21	0.43	0.43	0.43	0.10	0.10	0.10
Total Insoluble Dustfall	mg/dm2.day	0.10	0.10	0.10	0.10	0.21	0.43	0.43	0.43	0.10	0.10	0.10
Fixed Soluble Dustfall	mg/dm2.day	0.10	0.10	0.10	0.10	0.21	0.43	0.43	0.43	0.10	0.10	0.10
Volatile Soluble Dustfall	mg/dm2.day	0.10	0.10	0.10	0.10	0.21	0.43	0.43	0.43	0.10	0.10	0.10
Total Soluble Dustfall	mg/dm2.day	0.10	0.10	0.10	0.10	0.21	0.43	0.43	0.43	0.10	0.10	0.10
Metals (Dustfall)												
Aluminum (Al)-Total	mg/dm2.day	0.000067	0.000068	0.000051	0.000039	0.000097	0.00019	0.00019	0.00021	0.000047	0.000047	0.000049
Antimony (Sb)-Total	mg/dm2.day	0.0000022	0.0000023	0.0000017	0.0000013	0.0000032	0.0000062	0.0000064	0.0000070	0.0000016	0.0000016	0.0000016
Arsenic (As)-Total	mg/dm2.day	0.0000022	0.0000023	0.0000017	0.0000013	0.0000032	0.0000062	0.0000064	0.0000070	0.0000016	0.0000016	0.0000016
Barium (Ba)-Total	mg/dm2.day	0.0000011	0.0000011	0.00000085	0.00000065	0.0000016	0.0000031	0.0000032	0.0000035	0.00000078	0.00000078	0.00000081
Beryllium (Be)-Total	mg/dm2.day	0.000011	0.000011	0.0000085	0.0000065	0.000016	0.000031	0.000032	0.000035	0.0000078	0.0000078	0.0000081
Bismuth (Bi)-Total	mg/dm2.day	0.000011	0.000011	0.0000085	0.0000065	0.000016	0.000031	0.000032	0.000035	0.0000078	0.0000078	0.0000081
Boron (B)-Total	mg/dm2.day	0.00022	0.00023	0.00017	0.00013	0.00032	0.00062	0.00064	0.00070	0.00016	0.00016	0.00016
Cadmium (Cd)-Total	mg/dm2.day	0.0000011	0.0000011	0.00000085	0.00000065	0.0000016	0.0000031	0.0000032	0.0000035	0.00000078	0.00000078	0.00000081
Calcium (Ca)-Total	mg/dm2.day	0.00045	0.00045	0.00034	0.00026	0.00064	0.0012	0.0013	0.0014	0.00031	0.00031	0.00032
Chromium (Cr)-Total	mg/dm2.day	0.000011	0.000011	0.0000085	0.0000065	0.000016	0.000031	0.000032	0.000035	0.0000078	0.0000078	0.0000081
Cobalt (Co)-Total	mg/dm2.day	0.0000022	0.0000023	0.0000017	0.0000013	0.0000032	0.0000062	0.0000064	0.0000070	0.0000016	0.0000016	0.0000016
Copper (Cu)-Total	mg/dm2.day	0.000011	0.000011	0.0000085	0.0000065	0.000016	0.000031	0.000032	0.000035	0.000047	0.0000078	0.0000081
Iron (Fe)-Total	mg/dm2.day	0.00067	0.00068	0.00051	0.00039	0.00097	0.0019	0.0019	0.0021	0.00047	0.00047	0.00049
Lead (Pb)-Total	mg/dm2.day	0.0000011	0.0000011	0.00000085	0.00000065	0.0000016	0.0000031	0.0000032	0.0000035	0.00000078	0.00000078	0.00000081
Lithium (Li)-Total	mg/dm2.day	0.00011	0.00011	0.000085	0.000065	0.00016	0.00031	0.00032	0.00035	0.000078	0.000078	0.000081
Magnesium (Mg)-Total	mg/dm2.day	0.00011	0.00011	0.000085	0.000065	0.00016	0.00031	0.00032	0.00035	0.000078	0.000078	0.000081
Manganese (Mn)-Total	mg/dm2.day	0.0000022	0.0000023	0.0000017	0.0000013	0.0000032	0.0000062	0.0000064	0.0000070	0.0000016	0.0000016	0.0000016
Molybdenum (Mo)-Total	mg/dm2.day	0.0000011	0.0000011	0.00000085	0.00000065	0.0000016	0.0000031	0.0000032	0.0000035	0.00000078	0.00000078	0.00000081
Nickel (Ni)-Total	mg/dm2.day	0.000011	0.000011	0.0000085	0.0000065	0.000016	0.000031	0.000032	0.000035	0.0000078	0.0000078	0.0000081
Phosphorus (P)-Total	mg/dm2.day	0.0011	0.0011	0.00085	0.00065	0.0016	0.0031	0.0032	0.0035	0.00078	0.00078	0.00081
Potassium (K)-Total	mg/dm2.day	0.0011	0.0011	0.00085	0.00065	0.0016	0.0031	0.0032	0.0035	0.00078	0.00078	0.00081
Selenium (Se)-Total	mg/dm2.day	0.000022	0.000023	0.000017	0.000013	0.000032	0.000062	0.000064	0.000070	0.000016	0.000016	0.000016
Silicon (Si)-Total	mg/dm2.day	0.0011	0.0011	0.00085	0.00065	0.0016	0.0031	0.0032	0.0035	0.00078	0.00078	0.00081
Silver (Ag)-Total	mg/dm2.day	0.00000022	0.00000023	0.00000017	0.00000013	0.00000032	0.00000062	0.00000064	0.00000070	0.00000016	0.00000016	0.00000016
Sodium (Na)-Total	mg/dm2.day	0.0011	0.0011	0.00085	0.00065	0.0016	0.0031	0.0032	0.0035	0.00078	0.00078	0.00081
Strontium (Sr)-Total	mg/dm2.day	0.0000022	0.0000023	0.0000017	0.0000013	0.0000032	0.0000062	0.0000064	0.0000070	0.0000016	0.0000016	0.0000016
Thallium (Tl)-Total	mg/dm2.day	0.0000022	0.0000023	0.0000017	0.0000013	0.0000032	0.0000062	0.0000064	0.0000070	0.0000016	0.0000016	0.0000016
Tin (Sn)-Total	mg/dm2.day	0.0000022	0.0000023	0.0000017	0.0000013	0.0000032	0.0000062	0.0000064	0.0000070	0.0000016	0.0000016	0.0000016
Titanium (Ti)-Total	mg/dm2.day	0.00022	0.00023	0.00017	0.00039	0.00032	0.00062	0.00064	0.00070	0.00016	0.00016	0.00016
Uranium (U)-Total	mg/dm2.day	0.00000022	0.00000023	0.00000017	0.00000013	0.00000032	0.00000062	0.00000064	0.00000070	0.00000016	0.00000016	0.00000016
Vanadium (V)-Total	mg/dm2.day	0.000022	0.000023	0.000017	0.000013	0.000032	0.000062	0.000064	0.000070	0.000016	0.000016	0.000016
Zinc (Zn)-Total	mg/dm2.day	0.000067	0.000068	0.000051	0.000039	0.000097	0.00019	0.00019	0.00021	0.000047	0.000047	0.000049

APPENDIX D:
HI-VOL & PQ200 SAMPLER CALIBRATION SHEETS

TE-5170 Calibration Worksheet

Site Information

Location: Cleves, Ohio	**Site ID:** North	**Date:** 30-Jun-21
Sampler: 'E-5170 MFC	**Serial No:**	**Tech:** s. Flesher

Site Conditions

Barometric Pressure (in Hg): 28.70	**Corrected Pressure (mm Hg):** 729
Temperature (deg F): 77	**Temperature (deg K):** 298
Average Press. (in Hg): 28.70	**Corrected Average (mm Hg):** 729
Average Temp. (deg F): 70	**Average Temp. (deg K):** 294

Calibration Orifice

Make: Tisch	**Qstd Slope:** 1.67418
Model: TE-5028A	**Qstd Intercept:** -0.02696
Serial#: 1179	**Date Certified:** 24-Oct-14

Calibration Information

Plate or Test #	H2O (in)	Qstd (m3/min)	I (chart)	IC (corrected)
1	5.85	1.431	48.0	47.02
2	4.57	1.267	44.0	43.10
3	3.90	1.172	40.0	39.18
4	2.64	0.967	36.0	35.26
5	1.71	0.781	30.0	29.39

Linear Regression

Slope: 26.7656
Intercept: 8.7180
Corr. Coeff: 0.9959
# of Observations: 5

Calculations

Qstd = 1/m[Sqrt(H2O(Pa/Pstd)(Tstd/Ta))-b]
IC = I[Sqrt(Pa/Pstd)(Tstd/Ta)]

Qstd = standard flow rate
IC = corrected chart response
I = actual chart response
m = calibrator Qstd slope
b = calibrator Qstd intercept
Ta = actual temperature during calibration (deg K)
Pa = actual pressure during calibration (mm Hg)
Tstd = 298 deg K
Pstd = 760 mm Hg
For subsequent calculation of sampler flow:
1/m((I)[Sqrt(298/Tav)(Pav/760)]-b)

m = sampler slope
b = sampler intercept
I = chart response
Tav = daily average temperature
Pav = daily average pressure

Average I (chart): 44.0
Average Flow Calculation m3/min
1.29489689
Average Flow Calculation in CFM
45.72280919
Sample Time (Hrs): 24.0
Total Flow in m3/min
1864.651522
Total Flow in CFM
65840.84523

NOTE: Ensure calibration orifice has been certified within 12 months of use

TE-5170 Calibration Worksheet

Site Information

Location: Cleves, Ohio	**Site ID:** North	**Date:** 30-Jun-21
Sampler: 'E-5170 MFC	**Serial No:**	**Tech:** s. Flesher

Site Conditions

Barometric Pressure (in Hg): 28.70	**Corrected Pressure (mm Hg):** 729
Temperature (deg F): 77	**Temperature (deg K):** 298
Average Press. (in Hg): 28.70	**Corrected Average (mm Hg):** 729
Average Temp. (deg F): 70	**Average Temp. (deg K):** 294

Calibration Orifice

Make: Tisch	**Qstd Slope:** 1.67418
Model: TE-5028A	**Qstd Intercept:** -0.02696
Serial#: 1179	**Date Certified:** 24-Oct-14

Calibration Information

Plate or Test #	H2O (in)	Qstd (m3/min)	I (chart)	IC (corrected)
1	4.39	1.242	46.0	45.06
2	3.34	1.085	42.0	41.14
3	2.81	0.997	40.0	39.18
4	2.30	0.903	38.0	37.22
5	1.55	0.745	32.0	31.35

Linear Regression

Slope: 26.8698
Intercept: 12.0693
Corr. Coeff: 0.9924
# of Observations: 5

Calculations

Qstd = 1/m[Sqrt(H2O(Pa/Pstd)(Tstd/Ta))-b]
IC = I[Sqrt(Pa/Pstd)(Tstd/Ta)]

Qstd = standard flow rate
IC = corrected chart response
I = actual chart response
m = calibrator Qstd slope
b = calibrator Qstd intercept
Ta = actual temperature during calibration (deg K)
Pa = actual pressure during calibration (mm Hg)
Tstd = 298 deg K
Pstd = 760 mm Hg
For subsequent calculation of sampler flow:
1/m((I)[Sqrt(298/Tav)(Pav/760)]-b)

m = sampler slope
b = sampler intercept
I = chart response
Tav = daily average temperature
Pav = daily average pressure

Average I (chart): 44.0
Average Flow Calculation m3/min
1.165152153
Average Flow Calculation in CFM
41.14152252
Sample Time (Hrs): 24.0
Total Flow in m3/min
1677.8191
Total Flow in CFM
59243.79243

NOTE: Ensure calibration orifice has been certified within 12 months of use

TE-5170 Calibration Worksheet

Site Information

Location: Cleves, Ohio	**Site ID:** 145	**Date:** 29-Apr-21
Sampler: TE-5170 MFC	**Serial No:** 367	**Tech:** Jim Tisch

Site Conditions

Barometric Pressure (in Hg): 28.70	**Corrected Pressure (mm Hg):** 729
Temperature (deg F): 47	**Temperature (deg K):** 281
Average Press. (in Hg): 28.70	**Corrected Average (mm Hg):** 729
Average Temp. (deg F): 47	**Average Temp. (deg K):** 281

Calibration Orifice

Make: Tisch	**Qstd Slope:** 1.67418
Model: TE-5028A	**Qstd Intercept:** -0.02696
Serial#: 1179	**Date Certified:** 6-Jul-20

Calibration Information

Plate or Test #	H2O (in)	Qstd (m3/min)	I (chart)	IC (corrected)
1	5.12	1.378	48.0	48.38
2	4.65	1.314	46.0	46.37
3	3.90	1.205	42.0	42.33
4	3.30	1.110	40.0	40.32
5	2.85	1.033	38.0	38.30

Linear Regression

Slope: 29.2657
Intercept: 7.7868
Corr. Coeff: 0.9951
# of Observations: 5

Calculations

Qstd = 1/m[Sqrt(H2O(Pa/Pstd)(Tstd/Ta))-b]
IC = I[Sqrt(Pa/Pstd)(Tstd/Ta)]

Qstd = standard flow rate
IC = corrected chart response
I = actual chart response
m = calibrator Qstd slope
b = calibrator Qstd intercept
Ta = actual temperature during calibration (deg K)
Pa = actual pressure during calibration (mm Hg)
Tstd = 298 deg K
Pstd = 760 mm Hg
For subsequent calculation of sampler flow:
1/m((I)[Sqrt(298/Tav)(Pav/760)]-b)

m = sampler slope
b = sampler intercept
I = chart response
Tav = daily average temperature
Pav = daily average pressure

Average I (chart): 44.0
Average Flow Calculation m3/min
1.249380842
Average Flow Calculation in CFM
44.11563752
Sample Time (Hrs): 24.0
Total Flow in m3/min
1799.108412
Total Flow in CFM
63526.51803

NOTE: Ensure calibration orifice has been certified within 12 months of use

APPENDIX E:
SAMPLE EDIT LOGS

APPENDIX E-1: TOTAL SUSPENDED PARTICULATE SAMPLE EDIT LOG

Emitter: New Gold Inc.

Address: Rainy River Mine

Station Name: Northwest Station

Station Location: Tailings Management Area

Pollutant/Parameter: Total Suspended Particulate (TSP)

Measurement Instrument: High Volume (Hi-Vol) Sampler

Start Date: April 1, 2021

End Date: June 30, 2021

#	Action	Date	Reason
1	Invalid sample	April 16, 2021	Sample air volume (728 m^3) was below the minimum allowable volume (1,468 m^3)
2	Invalid sample	June 15, 2021	Sample air volume (2,021 m^3) exceeded the maximum allowable volume (1,794 m^3)

Emitter: New Gold Inc.

Address: Rainy River Mine

Station Name: Tait Road Station

Station Location: Near McMillan Road along the realigned Highway 600

Pollutant/Parameter: Total Suspended Particulate (TSP)

Measurement Instrument: High Volume (Hi-Vol) Sampler

Start Date: April 1, 2021

End Date: June 30, 2021

#	Action	Date	Reason
1	Invalid sample	April 16, 2021	Sample air volume (1,209 m^3) was below the minimum allowable volume (1,468 m^3)

Emitter: New Gold Inc.

Address: Rainy River Mine

Station Name: Gallinger Road Station

Station Location: North-east of the Site along Gallinger Road

Pollutant/Parameter: Total Suspended Particulate (TSP)

Measurement Instrument: High Volume (Hi-Vol) Sampler

Start Date: April 1, 2021

End Date: June 30, 2021

#	Action	Date	Reason
1	Invalid sample	April 10, 2021	Sample air volume (1,432 m^3) was below the minimum allowable volume (1,468 m^3)
2	Invalid sample	April 16, 2021	Sample air volume (1,206 m^3) was below the minimum allowable volume (1,468 m^3)
3	Equipment issue	April 22, 2021	Sampler did not record sample volume
4	Invalid sample	May 22, 2021	Sample air volume (1,363 m^3) was below the minimum allowable volume (1,468 m^3)

APPENDIX E-2: RESPIRABLE PARTICULATE MATTER SAMPLE EDIT LOG

Emitter: New Gold Inc.

Address: Rainy River Mine

Station Name: Gallinger Road Station

Station Location: North-east of the Site along Gallinger Road

Pollutant/Parameter: Respirable Particulate Matter ($PM_{2.5}$)

Measurement Instrument: PQ200 Sampler

Start Date: April 1, 2021

End Date: June 30, 2021

#	Action	Date	Reason
1	Equipment issue	April 22, 2021	Sampler did not record sample volume

APPENDIX E-3: DUSTFALL SAMPLE EDIT LOG

Emitter: New Gold Inc.

Address: Rainy River Mine

Station Name: SPP1 Station

Station Location: Stockpile Pond

Pollutant/Parameter: Dustfall

Measurement Instrument: Passive Sampler Jar

Start Date: April 1, 2021

End Date: June 30, 2021

#	Action	Date	Reason
1	Equipment issue	June 2, 2021	Sample analysis not returned

NEW GOLD INC.

RAINY RIVER MINE

AMBIENT AIR QUALITY MONITORING PROGRAM

THIRD QUARTER 2021 REPORT

NOVEMBER 2021

ACRONYMS AND ABBREVIATIONS

$\mu g/m^3$	Microgram per Cubic Metre
AAQC	Ambient Air Quality Criteria
AAQO	Alberta Ambient Air Quality Objectives
ACFM	Cubic Feet Per Minute at Actual Conditions
AEP	Alberta Environment and Parks
ASTM	American Society for Testing and Materials
BCMOE	British Columbia Ministry of the Environment
CAAQS	Canadian Ambient Air Quality Standards
CFM	Cubic Foot Per Minute
Hi-Vol	High Volume Sampler
ICP/AES	Inductively Coupled Plasma / Atomic Emission Spectroscopy
ICP/MS	Inductively Coupled Plasma / Mass Spectrometry
LPM	Litres Per Minute
MECP	Ministry of the Environment, Conservation and Parks
NIST	National Institute of Standards and Technology
NO_2	Nitrogen Dioxide
$PM_{2.5}$	Particulate Matter less than 2.5 microns (µm) in diameter
POI	Point of Impingement
SO_2	Sulphur Dioxide
TSP	Total Suspended Particulate
U.S. EPA	United States Environmental Protection Agency
UTM	Universal Transverse Mercator

TABLE OF CONTENTS

SECTION 1. INTRODUCTION 1

SECTION 2. MONITORING STATIONS 3

2.1 METEOROLOGICAL STATION 3

SECTION 3. ANALYTICAL METHODS 15

3.1 TOTAL SUSPENDED PARTICULATE MATTER (TSP) AND METALS 15
3.2 RESPIRABLE PARTICULATE MATTER ($PM_{2.5}$) 15
3.3 TOTAL DUSTFALL 16
3.4 PASSIVE SAMPLING FOR SO_2 AND NO_2 16

SECTION 4. MONITORING METHODS 18

4.1 HI-VOL AND PQ200 SAMPLERS 18
4.2 DUSTFALL SAMPLERS 18
4.3 PASSIVE SAMPLERS 18

SECTION 5. SAMPLING ISSUES 19

5.1 PERFORMANCE AND SITE AUDITS 19
5.2 EQUIPMENT AND SAMPLING ISSUES 19

SECTION 6. SAMPLING RESULTS 20

6.1 TSP AND METALS 20
6.2 $PM_{2.5}$ 23
6.3 TOTAL DUSTFALL 24
6.4 PASSIVE SO_2 AND NO_2 31

SECTION 7. MITIGATION MEASURES 34

SECTION 8. CONCLUSION 35

SECTION 9. REFERENCES 36

SECTION 10. CLOSING 38

LIST OF TABLES

TABLE 2-1. AMBIENT AIR MONITORING STATIONS 3
TABLE 4-1. SAMPLER CALIBRATION DATES 18
TABLE 5-1. Q2 INVALIDATED SAMPLES 19
TABLE 6-1. TSP SUMMARY STATISTICS 21
TABLE 6-2. MAXIMUM CONCENTRATIONS OF METALS 21
TABLE 6-3. $PM_{2.5}$ SUMMARY STATISTICS 23
TABLE 6-4. TOTAL DUSTFALL SUMMARY STATISTICS 25
TABLE 6-5: MAXIMUM MONTHLY CONCENTRATIONS FOR DUSTFALL METALS 26
TABLE 6-6: SPP1 DUSTFALL SAMPLES VERSUS STOCKPILE SIZE AND WEATHER DATA 30
TABLE 6-7: SUMMARY STATISTICS FOR SO_2 AND NO_2 32

LIST OF FIGURES

FIGURE 2-1. AMBIENT AIR MONITORING STATION LOCATIONS 4
FIGURE 2-2. LOCATION OF NON-POI AMBIENT MONITORING STATIONS 5
FIGURE 2-3. TAIT ROAD STATION SITING 6
FIGURE 2-4. GALLINGER ROAD STATION SITING 7
FIGURE 2-5. TAIT ROAD STATION DETAILED VIEW 8
FIGURE 2-6. NORTHWEST STATION SITING 9
FIGURE 2-7. SPP1 STATION SITING 10
FIGURE 2-8. NOP1 STATION SITING 11
FIGURE 2-9. CP1 STATION SITING 12
FIGURE 2-10. GH1 STATION SITING 13
FIGURE 2-11. CP1 STATION SITING 14
FIGURE 6-1. TSP SAMPLING RESULTS 22
FIGURE 6-2. MAX METAL SAMPLING RESULT AS A FRACTION OF METAL AAQC 22
FIGURE 6-3. $PM_{2.5}$ SAMPLING RESULTS 24
FIGURE 6-4. TOTAL DUSTFALL SAMPLING RESULTS AT POI STATIONS 27
FIGURE 6-5. FIXED DUSTFALL SAMPLING RESULTS AT POI STATIONS 27
FIGURE 6-6. PERCENT OF FIXED DUSTFALL IN TOTAL DUSTFALL 28
FIGURE 6-7. FIXED DUSTFALL FRACTION VS. TOTAL DUSTFALL CONCENTRATION 28
FIGURE 6-8. DUSTFALL SAMPLING RESULTS AT NON-POI STATIONS 29
FIGURE 6-9.FIXED DUSTFALL FRACTION VS. TOTAL DUSTFALL CONCENTRATION 29
FIGURE 6-10. DUSTFALL SAMPLING RESULTS AT SPP1 STATION 30
FIGURE 6-11. SPP1 DUSTFALL CONCENTRATIONS VS. STOCKPILE SIZE AND WEATHER DATA 31
FIGURE 6-12. SO_2 MONITORING RESULTS 33
FIGURE 6-13. NO_2 MONITORING RESULTS 33

LIST OF APPENDICES

APPENDIX A: SAMPLING RESULTS ..... **A**

APPENDIX A-1: TSP, METALS, AND $PM_{2.5}$ SAMPLING RESULTS ..... B
APPENDIX A-2: TOTAL DUSTFALL SAMPLING RESULTS ..... F
APPENDIX A-3: DUSTFALL METALS SAMPLING RESULTS L
APPENDIX A-4: SO_2 AND NO_2 PASSIVE SAMPLING RESULTS ..... P

APPENDIX B: NOTICE OF EXCEEDANCES FOR Q3 2021 ..... **R**

APPENDIX C: LABORATORY RESULTS ..... **S**

APPENDIX D: HI-VOL & PQ200 SAMPLER CALIBRATION SHEETS ..... **T**

APPENDIX E: SAMPLE EDIT LOGS ..... **U**

APPENDIX E-1: TOTAL SUSPENDED PARTICULATE SAMPLE EDIT LOG V
APPENDIX E-2: RESPIRABLE PARTICULATE MATTER SAMPLE EDIT LOG ..... W
APPENDIX E-3: DUSTFALL SAMPLE EDIT LOG ..... Y

APPENDIX F: MECP AUDIT ..... **Z**

Section 1. INTRODUCTION

The following is a summary of the Third Quarter 2021 Report results of the Ambient Air Quality Monitoring Program undertaken at New Gold Inc.'s Rainy River Mine located north-west of Emo, Ontario.

In this quarter, New Gold Inc. (New Gold) staff operated and maintained the ambient air quality monitoring sampling stations; communicated with laboratory staff, as required; prepared data summary reports; and performed equipment calibrations at the various monitoring stations, as necessary.

This Quarterly Ambient Air Quality Report addresses the required elements of a Quarterly Report, as defined in the "Operations Manual for Air Quality Monitoring in Ontario" (Ontario Ministry of the Environment, Conservation and Parks, 2019), hereafter referred to as the Operations Manual. The following information is provided:

- Sampling Details
- Contaminant Summary Statistics
    - Number of Valid Samples and Percent Valid Data
    - Arithmetic and Geometric Means
    - Max Sampling Results
- Summary of Exceedances of All Applicable Limits (incl. Ontario AAQCs and CAAQS)

The purpose of the Ambient Air Quality Monitoring Program is to quantify the potential air quality effects associated with mining activities. The Program is conducted in accordance with the Site's Amended Environmental Compliance Approval (ECA) No. 0412-A2LR4V, issued on September 24, 2015, and the MECP Program Approval Letter, dated November 9, 2016.

The Program consists of two (2) sampling stations established in May 2015:

- South-west of the Site near McMillan Road along the realigned Highway 600 (Tait Road Station); and
- North-east of the Site along Gallinger Road (Gallinger Road Station).

These sampling stations consist of:

- One (1) High Volume (Hi-Vol) Sampler for discrete sampling of total suspended particulate (TSP) and metals;
- One (1) PQ200 Sampler for discrete sampling of respirable particulate matter ($PM_{2.5}$);
- One (1) passive dustfall collection unit for sampling dustfall; and
- One (1) passive sampling enclosure for sampling nitrogen dioxide (NO_2) and sulphur dioxide (SO_2).

In December 2020, two (2) additional sampling locations were added:

- North-west of the Tailings Management Area (Northwest Station), which includes a Hi-Vol Sampler (TSP and metals) and a PQ200 Sampler ($PM_{2.5}$); and
- Near the Stockpile Pond (SPP1 Station), which includes a passive dustfall collection unit.

In January 2021, a standard passive dustfall collection unit was added at the Northwest Station, allowing the station to monitor dustfall in addition to TSP, metals, and $PM_{2.5}$.

Also in January 2021, four (4) new sampling locations were added in accordance with the Rainy River Mine 2020 Ambient Air Quality Monitoring Program "Monitoring Supplement to Operations" document, dated July 28, 2020. These sampling locations measure passive dustfall at key locations throughout the property. Each station consists of a single passive dustfall collection unit. The stations are located as follows:

- North of the Pit at the South Runoff Pond (NOP1 Station);
- At the West Creek Point (WCP1 Station);
- At the Sedimentation Pond north of the Georgeson House (GH1 Station); and
- At Clark Pond (CP1 Station).

Section 2. MONITORING STATIONS

The ambient air quality monitoring stations were sited in accordance with the criteria stipulated in the Operations Manual (2019).

Universal Transverse Mercator (UTM) co-ordinates for each station based on the NAD83 co-ordinate system are presented in **Table 2-1**. The stations are shown in **Figure 2-1** through **Figure 2-7** below.

Table 2-1. Ambient Air Monitoring Stations

Station	UTM Co-ordinates			Parameters Monitored
	Easting (m)	Northing (m)	Zone	
Tait Road (Southwest Station)	426 072	5 406 996	15	TSP, Metals, $PM_{2.5}$, Dustfall, NO_2, SO_2
Gallinger Road (Northeast Station)	431 133	5 410 534	15	TSP, Metals, $PM_{2.5}$, Dustfall, NO_2, SO_2
Northwest Station (TMA)	419 797	5 413 042	15	TSP, Metals, $PM_{2.5}$, Dustfall
SPP1 Station (Stockpile Pond)	426 937	5 410 799	15	Dustfall
NOP1 Station (South Runoff Pond)	426 297	5 410 537	15	Dustfall
WCP1 Station (West Creek Pond)	425 616	5 411 230	15	Dustfall
GH1 Station (Sedimentation Pond)	423 939	5 411 468	15	Dustfall
CP1 Station (Clark Pond)	429 514	5 409 427	15	Dustfall

2.1 METEOROLOGICAL STATION

Barron Site, located near Heatwole Road, contains a meteorological station that provides real-time wind speed, wind direction, temperature, relative humidity, precipitation, and solar radiation data. All measurements taken at this Site are taken at a height of ten (10) metres above grade.

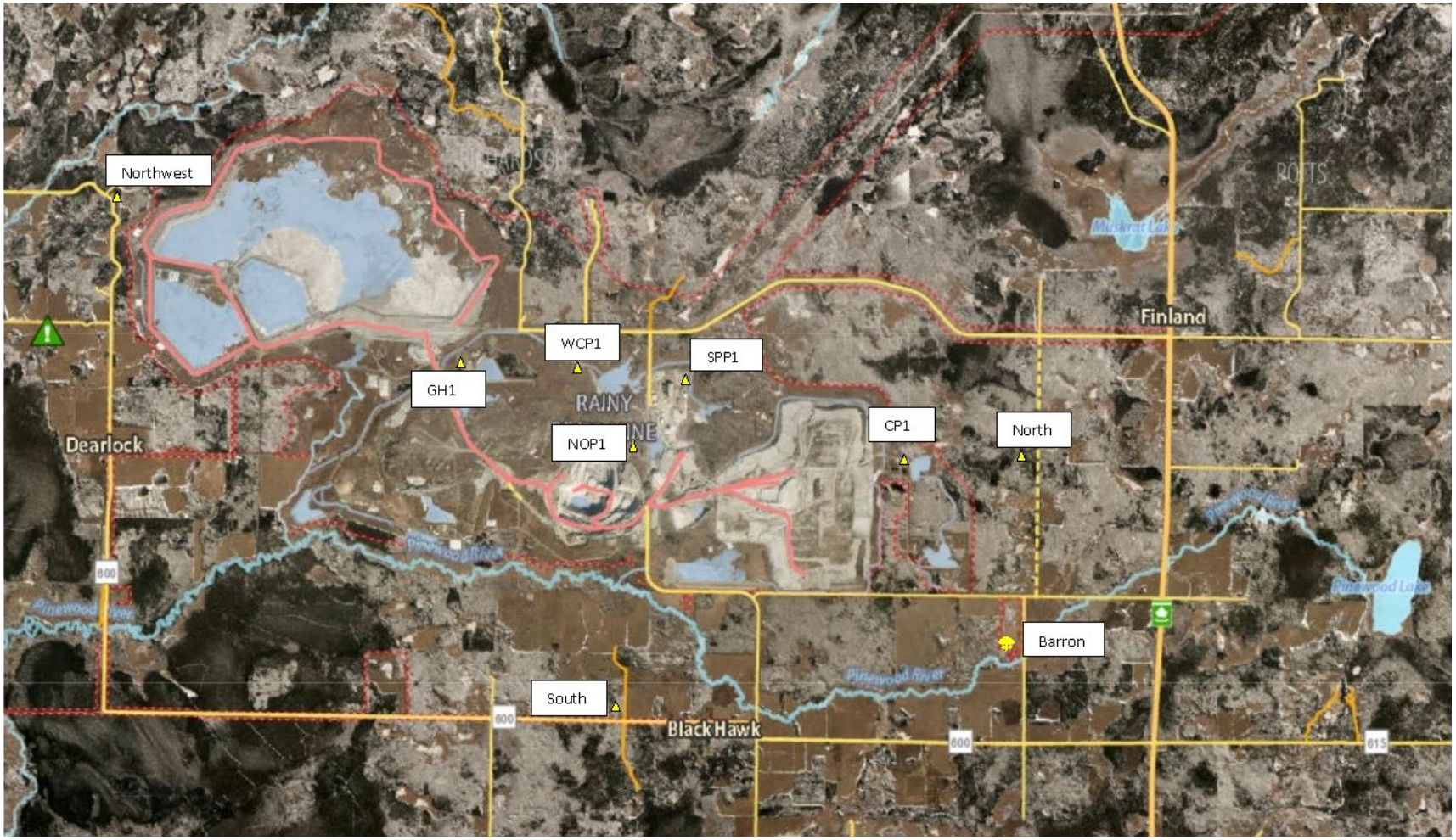

Figure 2-1. Ambient Air Monitoring Station Locations

Figure 2-2. Location of Non-POI Ambient Monitoring Stations

Figure 2-3. Tait Road Station Siting

Figure 2-4. Gallinger Road Station Siting

Figure 2-5. Tait Road Station Detailed View

Figure 2-6. Northwest Station Siting

Figure 2-7. SPP1 Station Siting

Figure 2-8. NOP1 Station Siting

Figure 2-9. WCP1 Station Siting

Figure 2-10. GH1 Station Siting

Figure 2-11. CP1 Station Siting

Section 3. Analytical Methods

3.1 Total Suspended Particulate Matter (TSP) and Metals

24-hour average TSP and metal samples were collected as specified in the Operations Manual. Samples were collected every sixth (6th) day, as per the U.S. EPA Sampling Schedule (United States Environmental Protection Agency, 2020).

TSP and metal samples were collected using High Volume (Hi-Vol) Samplers with a brush motor and controlled mass flow. The samples are collected on an 8-inch by 10-inch Hi-Vol quartz filter.

TSP concentrations are determined using the standard gravimetric reference method described in Compendium Method IO-3.1 of the U.S. EPA's "Compendium of Methods for the Determination of Inorganic Compounds in Ambient Air" (1999).

The lowest detectable mass of TSP on the filter is 2,300 micrograms (µg). A valid 24-hour sample volume for the Hi-Vol Sampler ranges between 1,468 and 1,794 cubic metres (m^3). As such, the method detection limit (MDL) for TSP ranges between 1.28 and 1.57 micrograms per cubic metre ($\mu g/m^3$).

Metal concentrations are determined using Inductively Coupled Plasma Atomic Emission Spectroscopy (ICP/AES) based on Compendium Method IO-3.5 (U.S. EPA, 1999). The metals and metalloids (elements with both metallic and non-metallic properties) analyzed include arsenic (As), cadmium (Cd), chromium (Cr), cobalt (Co), copper (Cu), iron (Fe), lead (Pb), manganese (Mn), nickel (Ni), selenium (Se), vanadium (V), and zinc (Zn).

The total volume of each sample is calculated using methods recommended by the sampler manufacturer. These calculations account for ambient temperature and pressure, sampler flow rate, and individual monitor specifications. The calculations are not corrected for humidity.

3.2 Respirable Particulate Matter ($PM_{2.5}$)

Respirable particulate samples are collected at the same time as TSP samples (every sixth day, as per the EPA Sampling Schedule).

Samples are collected using PQ200 Samplers over a 24-hour period to align with the averaging time for the Canadian Ambient Air Quality Standard (CAAQS). The samples are collected on a 47-millimetre (mm) diameter polytetrafluoroethylene (PTFE; Teflon) filter.

$PM_{2.5}$ concentrations are determined using the standard gravimetric reference method outlined in the U.S. EPA's "Quality Assurance Guidance Document 2.12: Monitoring $PM_{2.5}$ in Ambient Air Using Designated Reference or Class I Equivalent Methods" (U.S. EPA, 2016).

The lowest detectable mass of $PM_{2.5}$ on the Teflon filter is 15 micrograms (µg). Based on a valid 24-hour sample volume ranging between 21.6 and 26.4 m^3, the MDL for $PM_{2.5}$ ranges between 0.57 and 0.69 $\mu g/m^3$.

Total sample volume is recorded mechanically by the PQ200 Samplers.

3.3 TOTAL DUSTFALL

Total dustfall deposition samples are collected over a 30-day period using standard plastic dustfall sampler jars with four (4) millimetre (mm) polyethylene liners. The dustfall jars are treated with an algaecide to prevent algal growth during the summer and alcohol to prevent freezing during the winter.

The sample jars measure roughly 15.4-centimetres (cm) in diameter by 30.5 cm in height.

The water soluble and insoluble portions of dustfall are determined by gravimetric analysis using the method described in Section G of British Columbia Ministry of the Environment's "Air Constituents – Inorganic" (British Columbia Ministry of the Environment, 2020).

Metal concentrations within the dustfall samples are determined using Inductively Coupled Plasma-Mass Spectrometry (ICP/MS) in accordance with U.S. EPA's Method 6020A (SW-846) (U.S. EPA, 1998). The metals and metalloids sampled include aluminum (Al), antimony (Sb), arsenic (As), barium (Ba), beryllium (Be), bismuth (Bi), boron (B), cadmium (Cd), calcium (Ca), chromium (Cr), cobalt (Co), copper (Cu), iron (Fe), lead (Pb), lithium (Li), magnesium (Mg), manganese (Mn), molybdenum (Mo), nickel (Ni), phosphorus (P), potassium (K), selenium (Se), silicon (Si), silver (Ag), sodium (Na), strontium (Sr), thallium (Tl), tin (Sn), titanium (Ti), uranium (U), vanadium (V), and zinc (Z).

The analysis method employed for total dustfall has an MDL of 0.3 grams per square metre per 30 days (g/m^2/30 days).

3.4 PASSIVE SAMPLING FOR SO_2 AND NO_2

Sulphur dioxide (SO_2) and nitrogen dioxide (NO_2) concentrations are monitored by passive monitoring devices over a 30-day exposure period. As such, sample uptake depends on temperature, relative humidity, and wind speed. To account for this, analytical results are adjusted based on the monthly averages for these meteorological parameters throughout the exposure period. The required meteorological data are obtained by Maxxam Analytics from the Environment and Climate Change Canada website for the Fort Frances meteorological station (Climate ID 6022474) with each sample submission.

Since there is currently no MECP guidance on 30-day passive sampling of NO_2 or SO_2, sampling is performed using the methodology developed, approved, and validated by Alberta Environment with the support of the Alberta Research Council, the Clean Air Strategic Alliance of Alberta, and the National Research Council of Canada (Bari, Curran, & Kindzierski, 2015).

For both SO_2 and NO_2, the analytical MDL is on the order of 0.1 parts per billion by volume (ppbv). Validation tests conducted in Alberta show that results from passive sampling are typically within ten percent (10%) of those obtained from sampling with continuous analyzers for 30-day exposure periods (2015).

Since there are no MECP guidelines for monthly concentrations of SO_2 or NO_2 obtained from passive sampling, this data is used solely for screening purposes.

For NO_2, the monthly results are compared against Ontario's 24-hour AAQC (200 $\mu g/m^3$) converted to an equivalent 30-day (720-hour) average (78 $\mu g/m^3$) using the methodology outlined

in the MECP's "Guideline A-10: Procedure for Preparing an Emission Summary and Dispersion Modelling Report" (Ontario Ministry of the Environment, Conservation and Parks, 2019).

For SO_2, the monthly results are compared against Alberta's 30-day Ambient Air Quality Objective (AAQO) of 30 µg/m^3 (Alberta Environment and Parks, 2019).

Section 4. Monitoring Methods

4.1 Hi-Vol and PQ200 Samplers

Stations are visited every six days to take samples for TSP, metals, and $PM_{2.5}$. The exposed filter is recovered, and a pre-weighed filter is installed for the subsequent sample run.

Additional visits are made to the stations, as required, to resolve instrumentation issues, perform flow calibration checks, and preventative/proactive maintenance. All calibrations are performed in accordance with manufacturer specifications.

Flow calibrations are performed at least once per quarter by New Gold staff on the Hi-Vol TE-5170 Samplers using a Tisch Delta Calibration kit. The flow is calibrated to a flow rate of 1,133 litres per minute (LPM), which produces a sample volume of 1,632 m^3 in a 24-hour period.

Flow, temperature, and pressure calibrations are performed at least once per quarter by New Gold staff on the PQ200 Samplers using an electronic BGI Flow Calibrator. The flow is calibrated to a flow rate of 16.7 LPM, which produces a sample volume of 24 m^3 in a 24-hour period.

Table 4-1 below outlines the dates on which calibrations were performed on the Hi-Vol and PQ200 Samplers in this quarter. Calibration sheets for the samplers can be found in **Appendix D**.

Table 4-1. Sampler Calibration Dates

Station	Hi-Vol Sampler Calibration Date	PQ200 Sampler Calibration Date
Tait Road (Southwest Station)	August 13th, 2021	August 13th, 2021
Gallinger Road (Northeast Station)	August 13th, 2021	August 13th, 2021
Northwest Station (TMA)	August 13th, 2021	August 13th, 2021

4.2 Dustfall Samplers

The dustfall samplers containing algaecide are changed monthly to correspond with the 30-day exposure period.

Dustfall jars are provided by the laboratory with screw-on lids to prevent sample loss during transport.

4.3 Passive Samplers

The permeation filters in the passive samplers are also changed monthly to correspond with the 30-day exposure period.

Filters are kept in cassettes inside Ziploc bags until deployment to prevent premature exposure. After the sample is collected, the filter is placed back into the cassette and back into the Ziploc bag for shipment to the lab.

Section 5. Sampling Issues

5.1 Performance and Site Audits

There was one (1) MECP audit conducted in Q3 on September 9, 2021. There were no follow-up actions required.

5.2 Equipment and Sampling Issues

There were eight (8) samples invalidated in this quarter, as described in the table below and in **Appendix E**.

Table 5-1. Q2 Invalidated Samples

Sample Date	Station	Contaminant	Reasoning
July 9th, 2021	Gallinger Road	$PM_{2.5}$	Sampler operated for three days. Sample volume of 72.1 m^3 exceeded the upper volume limit of 26.4 m^3.
July 9th, 2021	Northwest Station	$PM_{2.5}$	Sampler operated for three days. Sample volume of 72.1 m^3 exceeded the upper volume limit of 26.4 m^3.
August 2nd, 2021	Tait Road	$PM_{2.5}$	Sampler operated for two days. Sample volume of 45.2 m^3 exceeded the upper volume limit of 26.4 m^3.
August 20th, 2021	Tait Road	TSP	Sample volume of 1,332 m^3 was below the lower volume limit of 1,468 m^3.
September 19th, 2021	Tait Road	TSP	Sample volume of 1,271 m^3 was below the lower volume limit of 1,468 m^3.
September 19th, 2021	Gallinger Road	$PM_{2.5}$	Sample volume of 21.1 m^3 was below the lower volume limit of 21.6 m^3.
September 25th, 2021	Tait Road	TSP	Sample volume of 1,377 m^3 was below the lower volume limit of 1,468 m^3.
-	Northwest Station	Dustfall	The passive sampler jar was accidentally left out for August and September (2 months duration).

The PQ200 Sampler for $PM_{2.5}$ at the Northwest Station was sent out for repairs due to ongoing issues in advance of the measurement scheduled for September 25th, 2021. As a result, this sample did not take place.

Section 6. Sampling Results

Sampling results for Q3 are presented in **Section 6.1** and **Appendix A-1** for TSP and metals, **Section 6.2** and **Appendix A-1** for $PM_{2.5}$, **Section 6.3** and **Appendices A-2** and **A-3** for total dustfall, and **Section 6.4** and **Appendix A-4** for passive SO_2 and NO_2.

In performing statistical analyses, as per the Operations Manual, a value of half the method detection limit is substituted for concentrations that are reported below the method detection limit. Laboratory Certificates of Analysis for all samples collected in Q2 are provided in **Appendix C**.

For comparative purposes, the Ontario AAQC and Canadian AAQS values are presented, where available. It is important to note that the Ontario AAQCs are equivalent to the standards prescribed by *Ontario Regulation 419/05: Air Pollution – Local Air Quality* (Government of Ontario, 2019).

Q3 presented fifteen (15) possible sampling days between July 1, 2021 and September 30, 2021 for the 6-day sampling schedule. Summaries of the analyses for TSP, metals, and $PM_{2.5}$ are presented in **Table 6-1, Table 6-2,** and **Table 6-3**, respectively.

Summaries of the analyses for total dustfall (incl. metals) and passive SO_2 and NO_2 are presented in **Table 6-4**, **Table 6-5**, **Table 6-6**, and **Table 6-7**.

6.1 TSP and Metals

In this quarter, the Gallinger Road Station and Northwest Station collected fifteen (15) valid samples (100% valid data), while the Tait Road Station collected twelve (12) valid samples (80% valid). Since the Tait Road Station is below the 90% valid data threshold, statistical analyses for TSP and metals for Tait Road are computed using all data, including invalid samples. For the other stations (i.e., Gallinger Road and Northwest), statistical analyses are performed using valid data only.

For this quarter, the arithmetic mean TSP concentration was 38.25 µg/m^3 at the Tait Road Station, 49.78 µg/m^3 at the Gallinger Road Station, and 41.61 µg/m^3 at the Northwest Station. Geometric means for the three stations were 33.73 µg/m^3, 39.79 µg/m^3, and 38.53 µg/m^3, respectively.

The maximum 24-hour concentration for TSP was 95.38 µg/m^3 at the Tait Road Station on July 15th, 114.56 µg/m^3 at the Gallinger Road Station on July 15th, and 77.06 µg/m^3 at the Northwest Station on July 27th.

Laboratory data are provided as the mass of contaminant on the filter, in micrograms. This is divided by the total sample volume measured by the Hi-Vol Sampler to determine the concentration of the contaminant in the sample using the following equation:

$$Concentration\ (\mu g/m^3) = \frac{Laboratory\ Measured\ Mass\ (\mu g)}{Sample\ Volume\ (m^3)}$$

In this quarter, there were no samples that exceeded the TSP AAQC (120 µg/m^3).

Data is summarized for TSP and metals in **Table 6-1** and **Table 6-2**. Sample data from all runs and further statistical analyses are presented in **Appendix A-1**, **Figure 6-1**, and **Figure 6-2.**

Table 6-1. TSP Summary Statistics. Concentrations presented in µg/m³.

	Tait Road Station	Gallinger Road Station	Northwest Station
Number of Valid Samples	12	15	15
% Valid Data	80%	100%	100%
Arithmetic Mean	38.25	49.78	41.61
Geometric Mean	33.73	39.79	38.53
July Maximum	95.38	114.56	77.06
August Maximum	83.00	99.66	65.49
September Maximum	35.09	55.95	48.16
24-Hour Maximum	95.38	114.56	77.06
24-Hour Minimum	17.12	11.45	20.38
90th Percentile	67.87	102.19	65.78
95th Percentile	86.72	107.08	69.29
TSP AAQC	120	120	120
Samples > TSP AAQC	0	0	0
Samples > Metal AAQC	0	0	0

Table 6-2. Maximum Concentrations of Metals. Concentrations presented in µg/m³.

Metal	24-Hour AAQC	Tait Road Station		Gallinger Road Station		Northwest Station	
		Maximum Concentration	Fraction of AAQC	Maximum Concentration	Fraction of AAQC	Maximum Concentration	Fraction of AAQC
As	0.3	1.18E-03	0.39%	1.02E-03	0.34%	1.02E-03	0.34%
Cd	0.025	7.87E-04	3.15%	6.80E-04	2.72%	6.79E-04	2.72%
Cr	0.5	3.71E-03	0.74%	5.43E-03	1.09%	1.70E-03	0.34%
Co	0.1	7.87E-04	0.79%	6.80E-04	0.68%	6.79E-04	0.68%
Cu	50	8.48E-02	0.17%	1.42E-01	0.28%	2.90E-01	0.58%
Fe	4	1.28	31.90%	2.40	60.09%	1.62	40.58%
Pb	0.5	8.32E-03	1.66%	6.10E-03	1.22%	3.53E-03	0.71%
Mn	0.4	4.79E-02	11.97%	6.60E-02	16.50%	4.68E-02	11.69%
Ni	0.2	2.00E-03	1.00%	3.26E-03	1.63%	1.02E-03	0.51%
Se	10	3.93E-03	0.04%	3.40E-03	0.03%	3.40E-03	0.03%
V	2	1.97E-03	0.10%	4.14E-03	0.21%	3.59E-03	0.18%
Zn	120	3.94E-02	0.03%	4.06E-02	0.03%	2.55E-02	0.02%

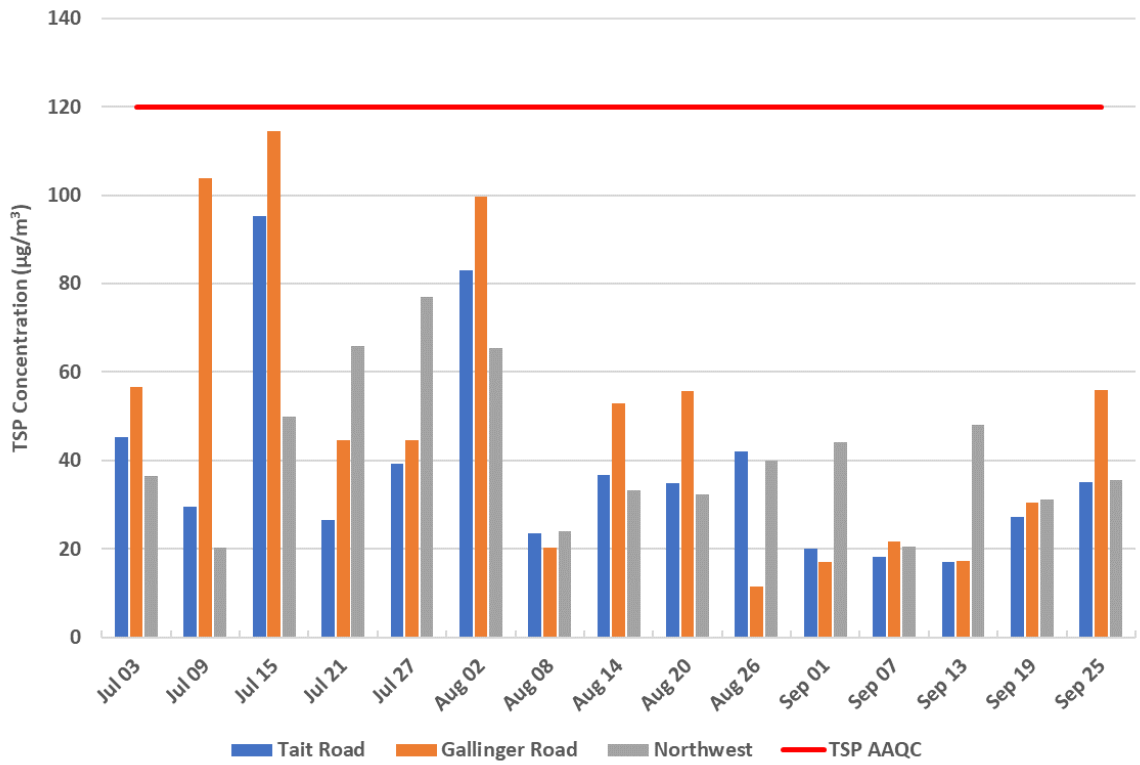

Figure 6-1. TSP Sampling Results

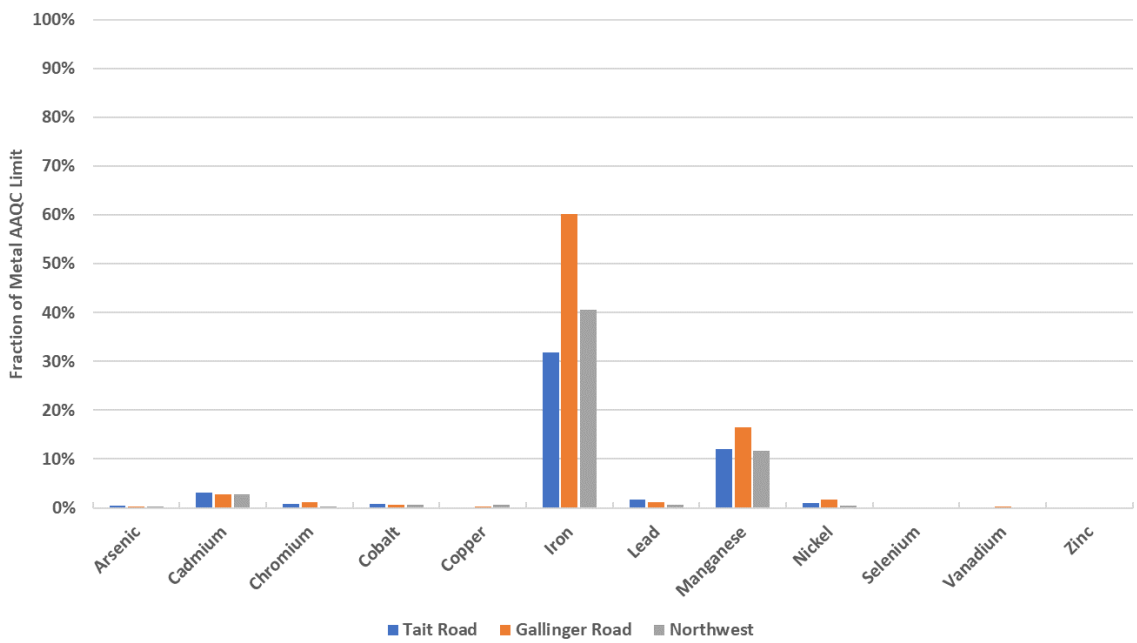

Figure 6-2. Max Metal Sampling Result as a Fraction of Metal AAQC

6.2 $PM_{2.5}$

In this quarter, the Tait Road Station collected fourteen (14) valid samples (93% valid data), while the Gallinger Road and Northwest Stations collected thirteen (13) valid samples, which represents 87% valid data for Gallinger Road and 93% valid data for the Northwest Station since the PQ200 Sampler was removed prior to the sampling period on September 25th (thus there were only 14 possible samples). Statistical analyses for respirable particulate matter for the Tait Road and Northwest stations are computed using only valid data since they are all above the 90% valid data threshold, while the Gallinger Road Station uses all data, including invalid samples.

For this quarter, the arithmetic mean $PM_{2.5}$ concentrations were 9.16 µg/m^3, 9.95 µg/m^3, and 11.01 µg/m^3 for the Tait Road, Gallinger Road, and Northwest Stations, respectively.

The maximum 24-hour concentrations for $PM_{2.5}$ were 36.52 µg/m^3 at the Tait Road Station on July 15th, 40.57 µg/m^3 at the Gallinger Road Station on August 2nd, and 37.01 µg/m^3 at the Northwest Station on August 2nd.

Laboratory data is provided as the mass of $PM_{2.5}$ on the filter, in micrograms. This value is divided by the total sample volume measured by the PQ200 Sampler to determine the concentration of $PM_{2.5}$ in the sample using the following equation:

$$Concentration\ (\mu g/m^3) = \frac{Laboratory\ Measured\ Mass\ (\mu g)}{Sample\ Volume\ (m^3)}$$

In this quarter, there were three (3) samples that exceeded the $PM_{2.5}$ AAQC or CAAQS (27 µg/m^3): July 15th at the Tait Road Station and August 2nd at the Gallinger Road and Northwest Stations.

Data is summarized for $PM_{2.5}$ in **Table 6-3**. Sample data from all runs and further statistical analyses are presented in **Appendix A-1** and **Figure 6-3**.

Table 6-3. $PM_{2.5}$ Summary Statistics. Concentrations presented in µg/m^3.

	Tait Road Station	Gallinger Road Station	Northwest Station
Number of Valid Samples	14	13	13
% Valid Data	93%	87%	93%
Arithmetic Mean	9.16	9.95	11.01
Geometric Mean	6.51	7.11	7.90
July Maximum	36.52	26.18	26.69
August Maximum	8.99	40.57	37.01
September Maximum	8.16	6.41	7.40
24-Hour Maximum	36.52	40.57	37.01
24-Hour Minimum	1.79	2.41	2.62
90th Percentile	15.54	20.95	23.93
95th Percentile	23.39	30.50	30.82

	Tait Road Station	Gallinger Road Station	Northwest Station
$PM_{2.5}$ AAQC	27	27	27
Samples > $PM_{2.5}$ AAQC	1	1	1
MDL (µg)	15	15	15
Samples < MDL	0	0	0

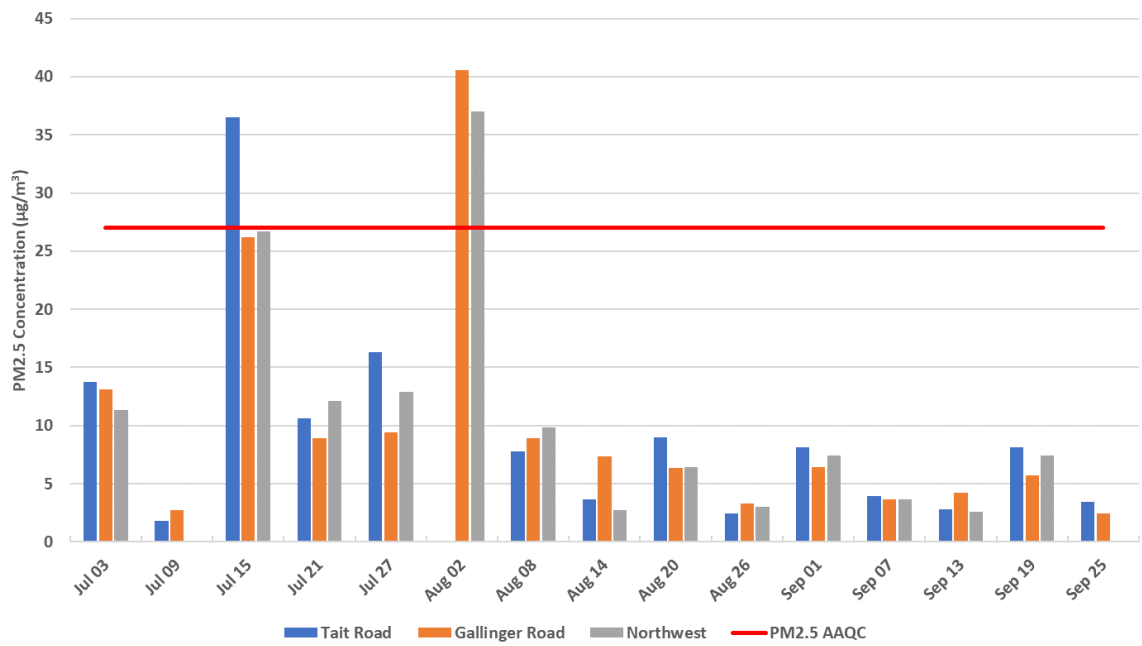

Figure 6-3. $PM_{2.5}$ Sampling Results

6.3 TOTAL DUSTFALL

New Gold operates seven (7) ambient monitoring stations that measure 30-day dustfall levels: Tait Road, Gallinger Road, Northwest, SPP1, NOP1, WCP1, GH1, and CP1. Of these stations, only the Tait Road, Gallinger Road, and Northwest Stations are considered POI receptors, so measurements at the other stations are used solely for monitoring changes in dustfall over time and are not compared against the AAQC limit for the purpose of determining exceedances of the limit.

In this quarter, the Tait Road and Gallinger Road collected three (3) valid samples (100% valid data), while the Northwest Station collected one (1) valid sample (33% valid data). NOP1, CP1, WCP1, and GH1 Stations collected three (3) valid samples (100% valid data). Sampling at the SPP1 Station occurs on a weekly basis, and there were thirteen (13) valid samples collected (100% valid data).

Laboratory data is provided as the mass of dustfall on the filter per square decimeter per day, in milligrams per decimeter square per day. This value is then converted to the appropriate units for reporting using the equation seen below:

$$Concentration\left(\frac{g}{m^2 \cdot 30\ days}\right) = Lab\ Concentration\left(\frac{mg}{dm^2 \cdot day}\right) \times \frac{1\ g}{1000\ mg} \times \frac{100\ dm^2}{1\ m^2} \times \frac{30\ days}{30\ days}$$

During the laboratory analysis, total dustfall is speciated into soluble and insoluble portions, as well as fixed and volatile portions. The fixed portion of total dustfall is the portion of the total dustfall that remains after the sample is ignited at 550°C. The mass of the sample lost during ignition represents the volatile portion. In the summer months (i.e., Q2 and Q3), the volatile portion of the dustfall is largely made up of large, organic particles (e.g., leaves, twigs, bugs, etc.) that are deposited and retained in the sample. As a result, the total dustfall may overestimate the actual dustfall mass in the sample. For this reason, the analysis of dustfall shows both fixed dustfall and total dustfall. The total dustfall versus fixed dustfall masses are compared in **Figure 6-5** and **Figure 6-6**.

In this quarter, there were no samples that exceeded the total dustfall 30-day Ontario AAQC (7 g/m^2/30 days).

Data is summarized for total dustfall in **Table 6-4**. Sample data from all runs and further statistical analyses are presented in **Appendix A-2**. Data is presented in **Table 6-5** and **Appendix A-3** for the metal concentrations measured in the dustfall at stations where metal samples are not taken by the Hi-Vol Sampler (i.e., SPP1, NOP1, WCP1, GH1, and CP1). **Table 6-6** compares the SPP1 dustfall concentrations against the stockpile elevation and weather conditions.

Table 6-4. Total Dustfall Summary Statistics. Concentrations presented in g/m^2/30 days.

	Tait Road Station	Gallinger Road Station	Northwest Station	SPP1 Station	NOP1 Station	WCP1 Station	GH1 Station	CP1 Station
Number of Valid Samples	3	3	1	13	3	3	3	3
% Valid Data	100%	100%	33%	100%	100%	100%	100%	100%
Arithmetic Mean	3.18	2.81	1.52	224.16	16.49	146.90	48.70	21.89
Monthly Maximum	5.37	4.95	1.68	528.00	34.80	225.60	69.00	51.60
Dustfall AAQC	7	7	7	7	7	7	7	7
Samples > Dustfall AAQC	0	0	0	13	2	3	3	2
Samples < MDL	0	0	0	0	0	0	0	0

Table 6-5: Maximum Monthly Concentrations for Dustfall Metals. Concentrations presented in g/m²/30 days.

Metal	SPP1 Station	NOP1 Station	WCP1 Station	GH1 Station	CP1 Station
Aluminum	3.30E-01	1.26E-01	2.28E-01	7.50E-02	3.09E-02
Antimony	1.45E-04	2.34E-05	1.92E-05	1.20E-05	4.80E-06
Arsenic	9.00E-04	8.22E-05	1.94E-04	8.79E-05	8.67E-05
Barium	6.09E-03	6.96E-04	3.21E-03	1.01E-03	4.59E-03
Beryllium	1.65E-04	1.35E-05	2.85E-05	1.40E-05	2.40E-05
Bismuth	1.65E-04	1.98E-05	2.85E-05	1.40E-05	2.40E-05
Boron	2.27E-02	2.70E-04	4.32E-03	1.80E-03	7.50E-04
Cadmium	4.83E-04	2.18E-05	1.62E-04	2.60E-05	3.72E-05
Calcium	6.51	5.04E-01	2.66	7.35E-01	6.03
Chromium	1.47E-03	1.43E-04	5.22E-04	2.30E-04	5.79E-05
Cobalt	4.20E-04	4.86E-05	2.87E-04	1.13E-04	4.77E-05
Copper	7.89E-02	7.11E-04	4.53E-02	2.10E-02	2.72E-03
Iron	4.26E-01	1.10E-01	3.09E-01	1.11E-01	5.61E-02
Lead	6.15E-03	1.15E-03	6.12E-04	1.17E-04	6.27E-05
Lithium	1.65E-03	1.35E-04	3.60E-04	2.46E-04	2.40E-04
Magnesium	2.13	1.40E-01	1.24	5.16E-01	3.78E-01
Manganese	6.18E-02	1.14E-02	2.90E-02	9.51E-03	1.30E-02
Molybdenum	2.02E-03	1.54E-05	9.66E-04	3.48E-04	2.99E-05
Nickel	1.11E-02	1.72E-04	2.28E-03	7.02E-04	1.16E-04
Phosphorus	16.20	1.53E-01	10.70	3.06	7.80E-01
Potassium	22.40	2.32E-01	16.00	4.20	1.17
Selenium	1.09E-03	2.70E-05	6.96E-04	2.67E-04	5.10E-05
Silicon	8.46E-01	1.61E-01	5.79E-01	1.79E-01	6.51E-02
Silver	2.59E-04	2.18E-05	3.15E-05	7.65E-06	1.29E-05
Sodium	3.57	2.28E-02	2.36	5.97E-01	8.31E-01
Strontium	1.34E-02	9.48E-04	4.83E-03	2.25E-03	1.19E-02
Thallium	3.30E-05	2.70E-06	5.55E-06	2.85E-06	4.80E-06
Tin	3.93E-05	2.70E-06	5.55E-06	6.00E-06	4.80E-06
Titanium	6.39E-03	2.37E-03	2.97E-03	1.53E-03	6.30E-04
Uranium	4.65E-04	3.21E-06	2.63E-05	6.84E-06	5.70E-06
Vanadium	7.14E-04	1.83E-04	6.87E-04	2.49E-04	8.10E-05
Zinc	2.72E-01	6.06E-03	1.26E-01	6.27E-02	1.02E-02

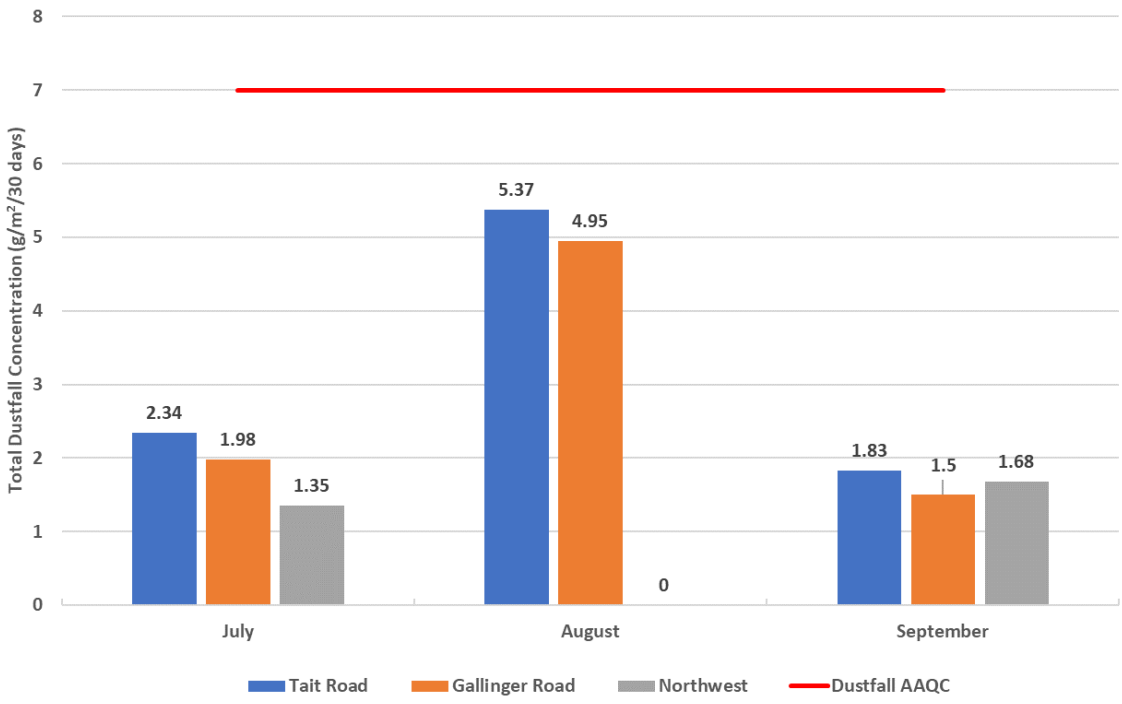

Figure 6-4. Total Dustfall Sampling Results at POI Stations

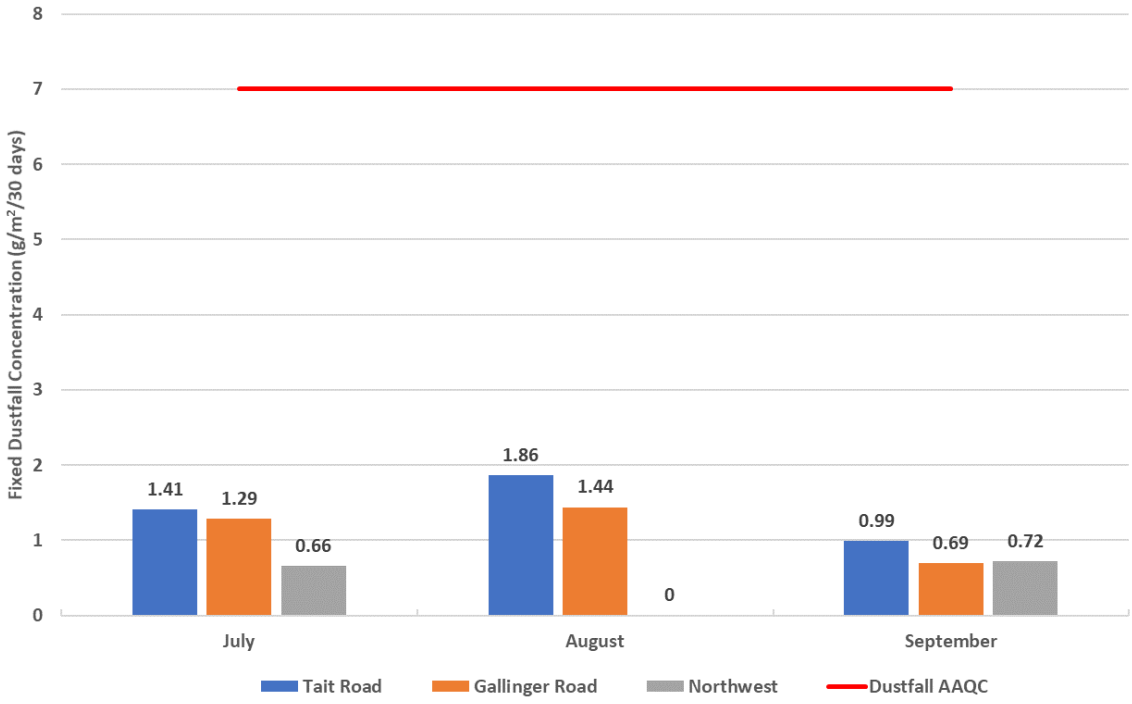

Figure 6-5. Fixed Dustfall Sampling Results at POI Stations

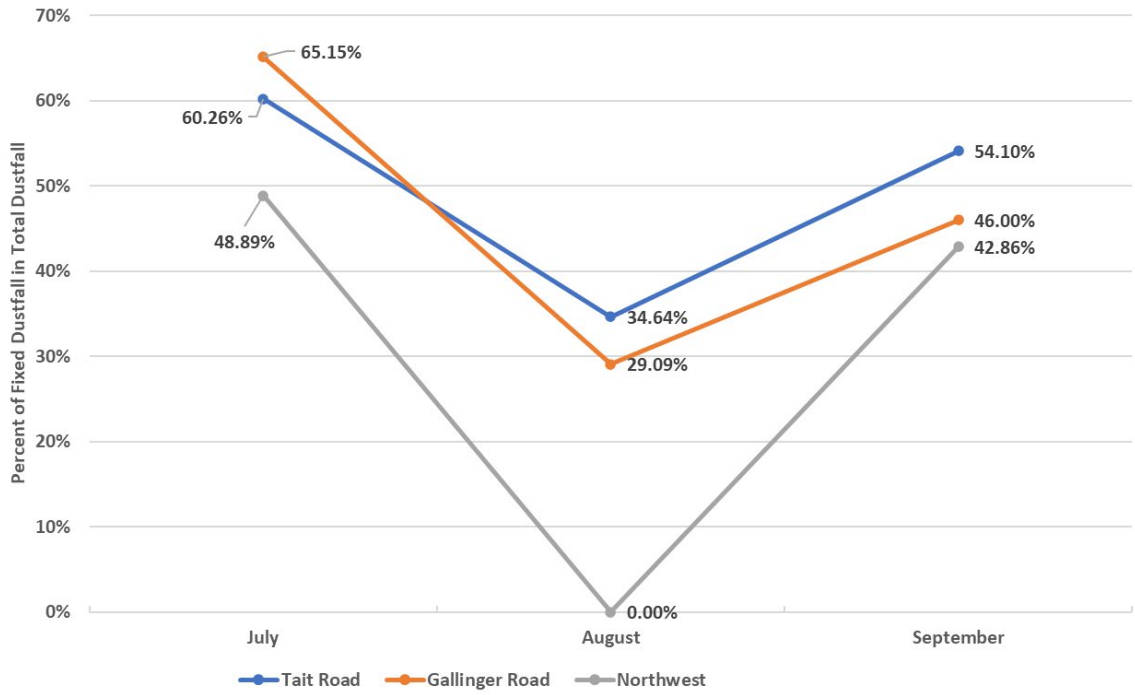

Figure 6-6. Percent of Fixed Dustfall in Total Dustfall

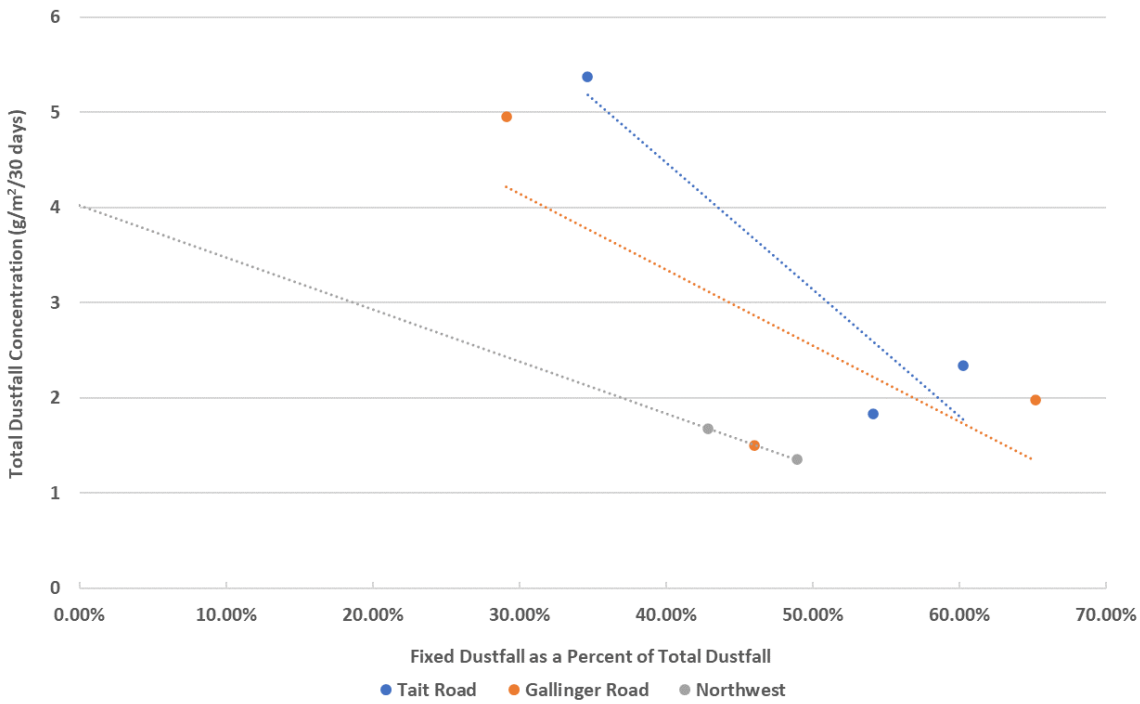

Figure 6-7. Fixed Dustfall Fraction vs. Total Dustfall Concentration

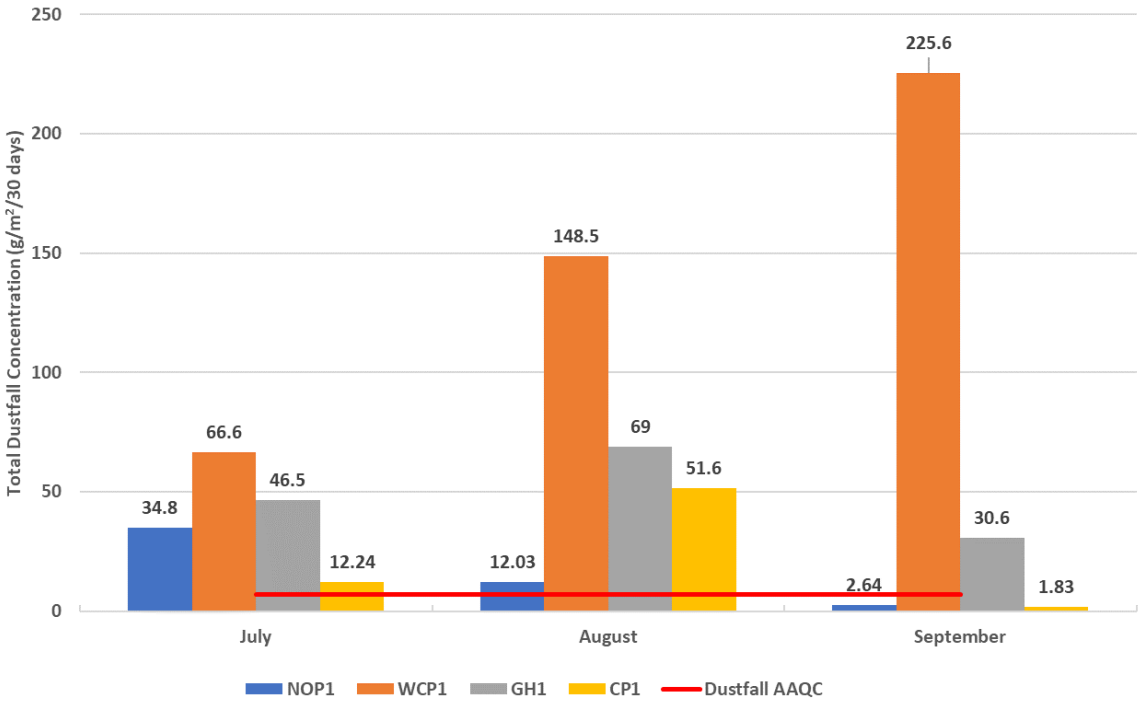

Figure 6-8. Dustfall Sampling Results at Non-POI Stations

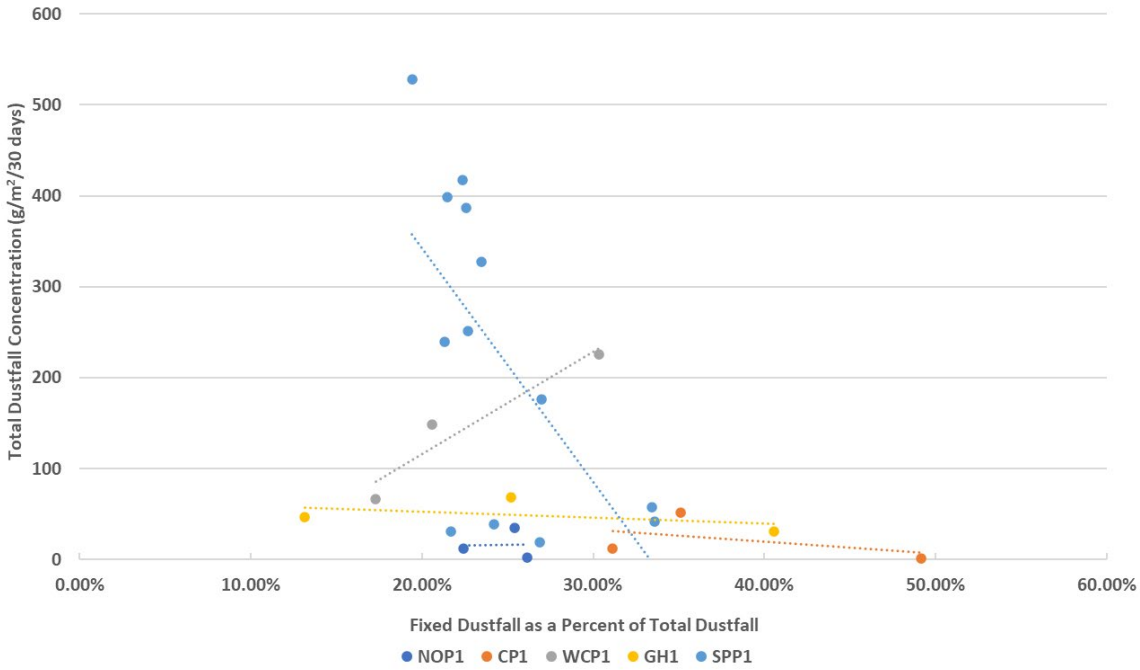

Figure 6-9.Fixed Dustfall Fraction vs. Total Dustfall Concentration

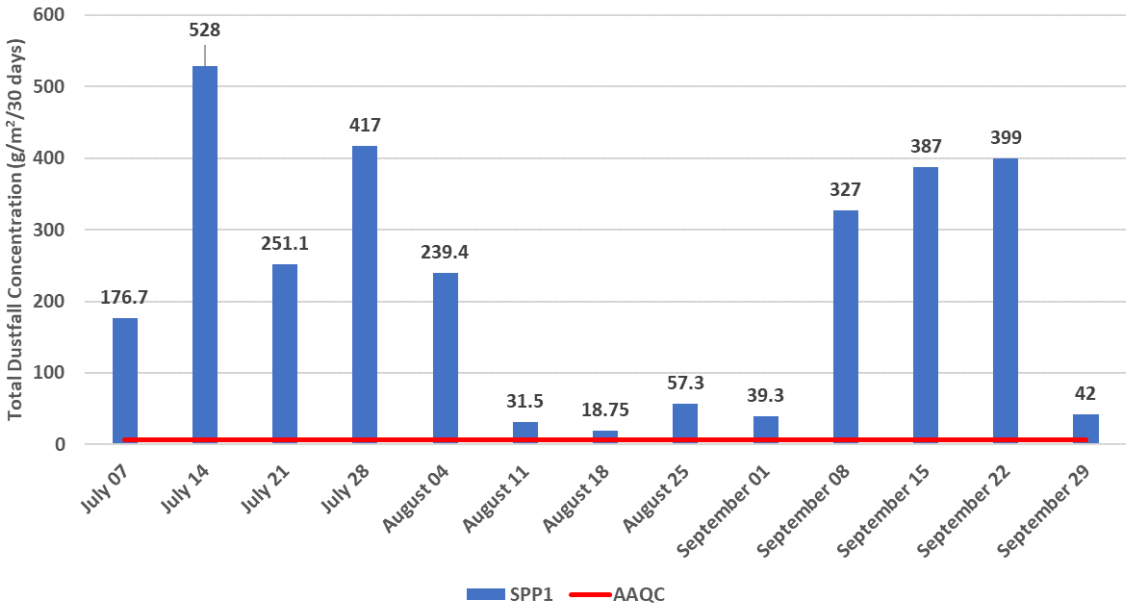

Figure 6-10. Dustfall Sampling Results at SPP1 Station

Table 6-6: SPP1 Dustfall Samples versus Stockpile Size and Weather Data

Start Date	Stop Date	Stockpile Size	Precipitation	Avg. Wind Speed	Avg. Wind Direction	Total Dustfall
		(%)	(mm)	(km/hr)	(°)	(g/m²/30 days)
July 7	July 14	81.00%	27.5	3.1	45	176.70
July 14	July 21	89.80%	5.6	3.4	45	528.00
July 21	July 28	62.70%	5.4	4.1	112.5	251.10
July 28	August 4	70.00%	0	3	247.5	417.00
August 4	August 11	73.00%	15.9	4.3	202.5	239.40
August 11	August 18	66.00%	0.3	5.4	180	31.50
August 18	August 25	69.80%	12.7	5	180	18.75
August 25	September 1	56.2%	38.7	4.9	67.5	57.30
September 1	September 8	87.20%	15.1	6.2	270	39.30
September 8	September 15	90.90%	6	4.9	315	327.00
September 15	September 22	38.50%	83.7	8.9	202.5	387.00
September 22	September 29	41.70%	0	6.9	180	399.00

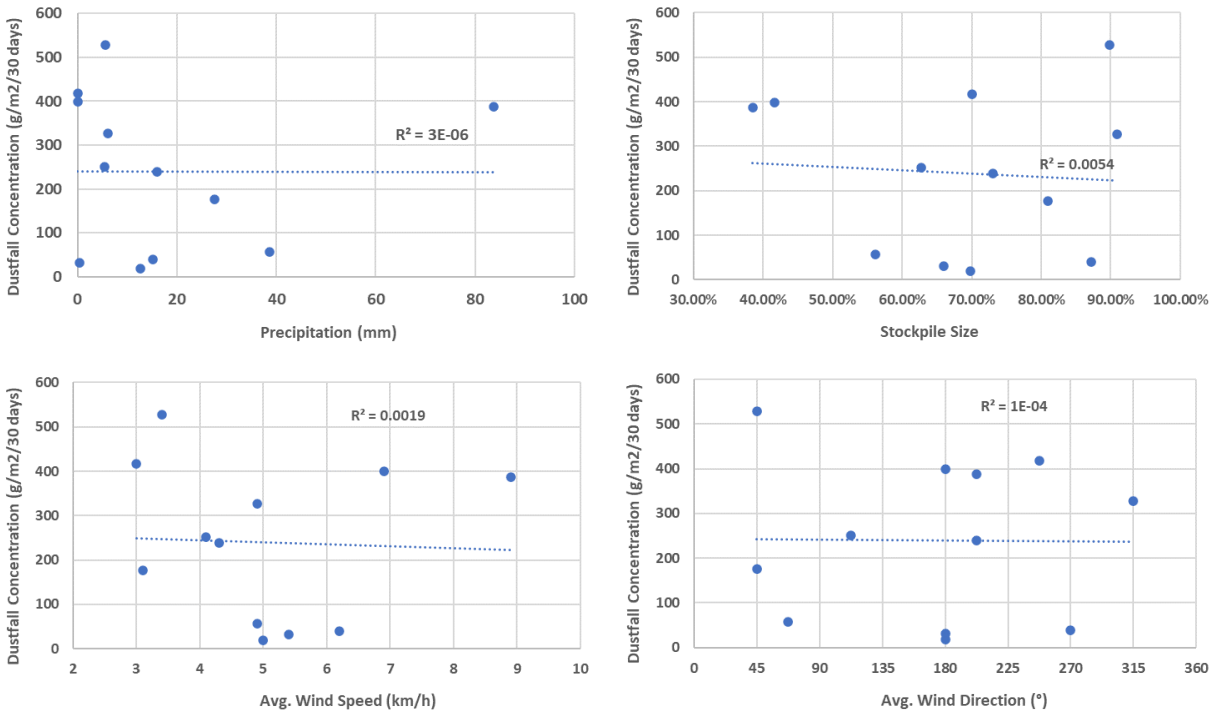

Figure 6-11. SPP1 Dustfall Concentrations vs. Stockpile Size and Weather Data

6.4 PASSIVE SO_2 AND NO_2

The Tait Road and Gallinger Road Stations collected three (3) valid samples out of a possible three (3) sampling opportunities (100% valid data) in this quarter.

There are no MECP standards, guidelines, or Ontario AAQCs for SO_2 or NO_2 for a 30-day averaging period. Instead, the 30-day measured average SO_2 or NO_2 concentrations allow for future analysis of trends in the ambient concentrations, identification of notable increases, and comparison with dispersion modelling results.

For NO_2, the monthly results are compared against Ontario's 24-hour NO_2 AAQC (200 µg/m^3) converted to an equivalent 30-day average (78 µg/m^3) using the methodology outlined in Table 7-1 of the MECP's "Guideline A-10: Procedure for Preparing an Emission Summary and Dispersion Modelling Report" (2019).

For SO_2, the monthly results are compared against Alberta's 30-day SO_2 Ambient Air Quality Objective (AAQO) of 30 µg/m^3 (Alberta Environment and Parks, 2019).

For this quarter, the arithmetic mean SO_2 concentration was 0.13 µg/m^3 at both the Tait Road and Gallinger Road Stations. The arithmetic mean NO_2 concentrations were 1.19 µg/m^3 and 0.75 µg/m^3 at the Tait Road and Gallinger Road Stations, respectively.

The maximum monthly concentration of SO_2 was 0.13 µg/m^3, which happened at both stations in all three samples. The maximum monthly concentration of NO_2 was 1.88 µg/m^3 at the Tait Road Station in July and 0.94 µg/m^3 at the Gallinger Road Station in July.

Laboratory data is provided as the concentration of the contaminant in the sample, in parts per billion by volume. This value is then converted to the appropriate units for reporting using the equation seen below:

$$Concentration\ (\mu g/m^3) = Lab\ Concentration\ (ppbv) \times \frac{Molecular\ Weight}{Molar\ Volume}$$

In this quarter, there were no samples that exceeded the converted 24-hour NO_2 Ontario AAQC (78 µg/m^3), and no samples that exceeded the 30-day Alberta SO_2 AAQO (30 µg/m^3).

Data is summarized for SO_2 and NO_2 in **Table 6-7**. Sample data from all runs and further statistical analyses are presented in **Appendix A-4**.Error! Reference source not found.

Table 6-7: Summary Statistics for SO_2 and NO_2. Concentrations presented in µg/m^3.

	Tait Road Station		Gallinger Road Station	
	SO_2	**NO_2**	**SO_2**	**NO_2**
Number of Valid Samples	3	3	3	3
% Valid Data	100%	100%	100%	100%
Arithmetic Mean	0.13	1.19	0.13	0.75
Monthly Maximum	0.13	1.88	0.13	0.94
Limit	30	78	30	78
Samples > Limit	0	0	0	0
MDL	0.26	0.19	0.26	0.19
Samples < MDL	3	0	3	0

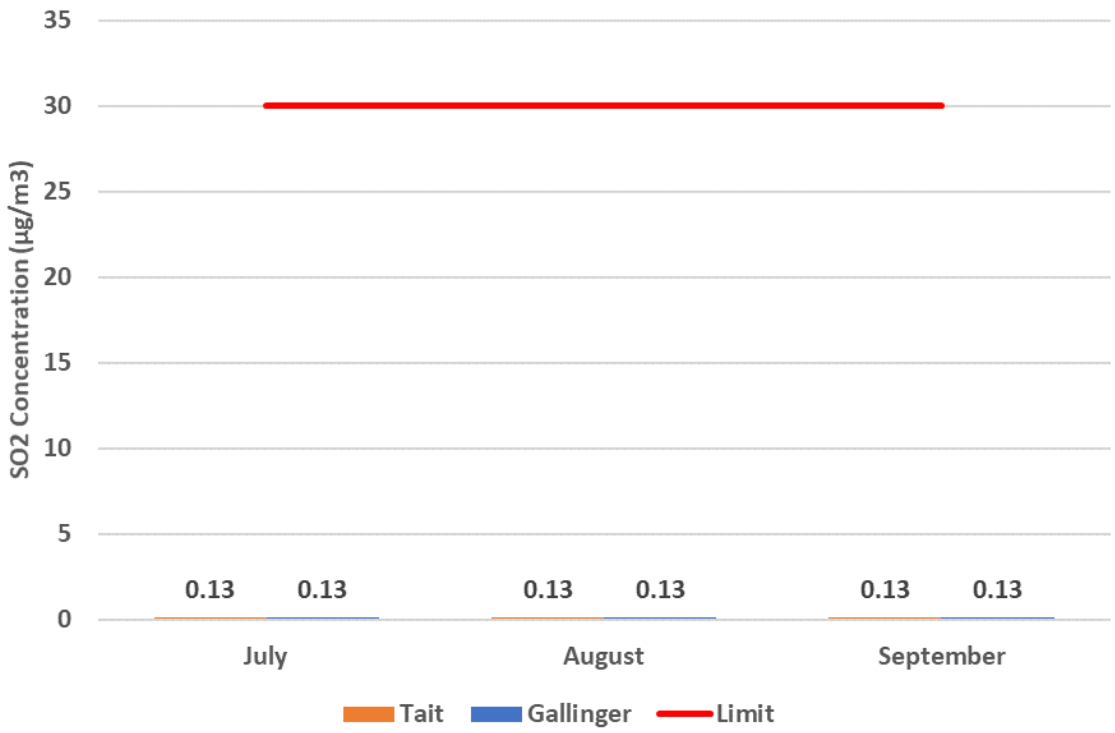

Figure 6-12. SO_2 Monitoring Results

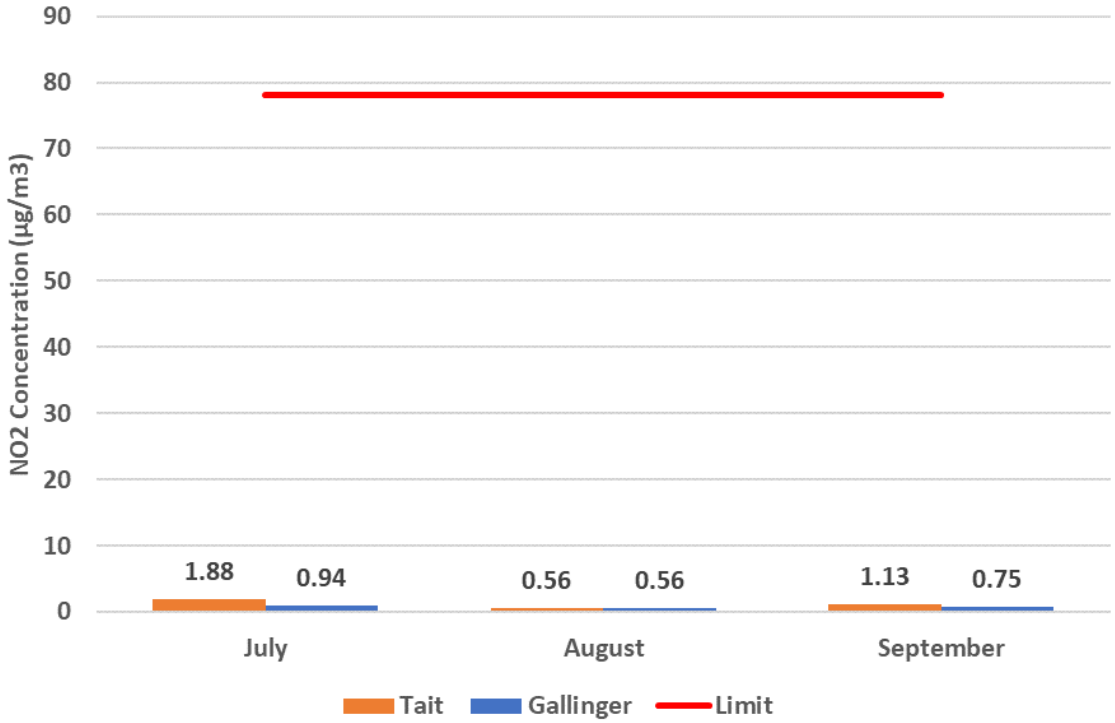

Figure 6-13. NO_2 Monitoring Results

Section 7. MITIGATION MEASURES

A series of mitigation steps were taken in Q2 of 2020 to remedy issues with variable flow rates through the Hi-Vol TSP Samplers leading to invalid samples. In Q3 of 2021, there were three (3) invalid TSP samples.

Generally, a high percent of the total dustfall samples taken at the SPP1 Station are in exceedance of the AAQC. However, since this Station is located within the property boundary and not considered a point of impingement, no mitigation measures have been implemented at this time.

There have been ongoing issues with the Northwest PQ200 Sampler; as a result, the sampler has been shipped out for repairs.

Section 8. CONCLUSION

The Rainy River Mine Ambient Air Quality Monitoring Program was conducted in the third quarter of 2021 in accordance with the Site's Amended Environmental Compliance Approval (ECA) Number 0412-A2LR4V and the MECP Program Approval Letter.

Samples were taken every sixth (6th) day for total suspended particulate matter (TSP), metals, and respirable particulate matter ($PM_{2.5}$). Samples were taken monthly for total dustfall, sulphur dioxide (SO_2), and nitrogen dioxide (NO_2).

These samples were sent out for analysis in accordance with the methods prescribed in the Operations Manual.

There were three (3) exceedances of the $PM_{2.5}$ limit in Q3 of 2021—one exceedance at each station.

There were no exceedances of the TSP, metal, dustfall, NO_2, or SO_2 limits.

Section 9. References

Alberta Environment and Parks. (2019, January). *Alberta Ambient Air Quality Objectives and Guidelines Summary.* Retrieved from Ambient Air Quality Objectives: https://open.alberta.ca/dataset/0d2ad470-117e-410f-ba4f-aa352cb02d4d/resource/4ddd8097-6787-43f3-bb4a-908e20f5e8f1/download/aaqo-summary-jan2019.pdf

American Society for Testing and Materials International. (2017). *ASTM D1739-98(2017), Standard Test Method for Collection and Measurement of Dustfall (Settleable Particulate Matter).* Retrieved from Standards Products: https://www.astm.org/Standards/D1739.htm

Bari, M., Curran, R. T., & Kindzierski, W. B. (2015). Field performance evaluation of Maxxam passive samplers for regional monitoring of ambient SO2, NO2 and O3 concentrations in Alberta, Canada. *Atmospheric Environment, 114*, 39-47.

British Columbia Ministry of the Environment. (2020). *Section G: Air Constituents - Inorganic.* Retrieved from B.C. Environmental Laboratory Manual: https://www2.gov.bc.ca/assets/gov/environment/research-monitoring-and-reporting/monitoring/emre/lab-manual/section-g-2020.pdf

Government of Ontario. (2019, January 1). *O. Reg. 419/05: Air Pollution - Local Air Quality*. Retrieved from Ontario Laws: https://www.ontario.ca/laws/regulation/050419

Ontario Ministry of the Environment, Conservation and Parks. (2019, May 14). *Operations manual for air quality monitoring in Ontario*. Retrieved from Ontario.ca: https://www.ontario.ca/document/operations-manual-air-quality-monitoring-ontario-0

Ontario Ministry of the Environment, Conservation and Parks. (2019, May 1). *Procedure for Preparing an Emission Summary and Dispersion Modelling Report.* Retrieved from Guideline A-10: https://files.ontario.ca/books/20180309_moecc_65_emission_aoda_en-aoda.pdf

Ontario Ministry of the Environment, Conservation and Parks. (2020, May 1). *Ambient Air Quality Criteria.* Retrieved from Ontario's Ambient Air Quality Criteria: https://files.ontario.ca/mecp-ambient-air-quality-criteria-list-en-2020-05-01.pdf

U.S. EPA. (1998, January). *Method 6020A: Inductively Coupled Plasma - Mass Spectrometry.* Retrieved from U.S. Environmental Protection Agency: https://19january2017snapshot.epa.gov/sites/production/files/2015-07/documents/epa-6020a.pdf

U.S. EPA. (1999, June). *Compendium of Methods for the Determination of Inorganic Compounds in Ambient Air: Compendium Method IO-3.1.* Retrieved from U.S. Environmental Protection Agency: https://www.epa.gov/sites/production/files/2015-07/documents/epa-io-3.1.pdf

U.S. EPA. (1999, June). *Compendium of Methods for the Determination of Inorganic Compounds in Ambient Air: Compendium Method IO-3.5.* Retrieved from U.S. Environmental

Protection Agency: https://www.epa.gov/sites/production/files/2015-07/documents/epa-io-3.5.pdf

U.S. EPA. (2016, January). *Quality Assurance Guidance Document 2.12: Monitoring PM2.5 in Ambient Air Using Designated Reference or Class I Equivalent Methods.* Retrieved from U.S. Environmental Protection Agency: https://www3.epa.gov/ttnamti1/files/ambient/pm25/qa/m212.pdf

United States Environmental Protection Agency. (2020, November). *2021 EPA Sampling Schedule.* Retrieved from Sampling Schedule Calendar: https://www.epa.gov/sites/production/files/2020-11/documents/2021_sampling_schedule.pdf

Section 10. CLOSING

The *Rainy River Mine Ambient Air Quality Monitoring Program Third Quarter 2021 Report* was prepared by New Gold Inc. The quality of information, conclusions, and estimates contained herein are based on:

- Information available at the time of preparation;
- Data supplied by outside sources; and
- The assumptions, conditions, and qualifications set forth in this document.

If you require further information regarding the above, or the Mine in general, please contact the undersigned at 1(807) 234-8170.

Sincerely,

New Gold Inc.

Rainy River Mine

Prepared By:

Garnet Cornell

Environment Superintendent

APPENDIX A:
SAMPLING RESULTS

Appendix A-1 TSP, Metals, and $PM_{2.5}$ Sampling Results

Appendix A-2 Total Dustfall Sampling Results

Appendix A-3 Dustfall Metals Sampling Results

Appendix A-4 SO_2 and NO_2 Passive Sampling Results

APPENDIX A-1:

TSP, METALS, AND $PM_{2.5}$ SAMPLING RESULTS

Tait Road Station Monitoring Results
(concentrations expressed in µg/m³)

Date	TSP	As	Cd	Cr	Co	Cu	Fe	Pb	Mn	Ni	Se	V	Zn	$PM_{2.5}$
July 3	45.17	*9.00E-04*	*6.00E-04*	*1.50E-03*	*6.00E-04*	5.35E-02	7.38E-01	*9.00E-04*	3.43E-02	*9.00E-04*	*3.00E-03*	*1.50E-03*	1.36E-02	13.73
July 9	29.44	*8.66E-04*	*5.77E-04*	*1.44E-03*	*5.77E-04*	4.76E-02	4.26E-01	*8.66E-04*	1.35E-02	*8.66E-04*	*2.89E-03*	*1.44E-03*	9.35E-03	1.79
July 15	95.38	*9.11E-04*	*6.08E-04*	3.71E-03	*6.08E-04*	5.85E-02	1.28	8.32E-03	4.79E-02	2.00E-03	*3.04E-03*	*1.52E-03*	3.94E-02	36.52
July 21	26.44	*8.91E-04*	*5.94E-04*	*1.49E-03*	*5.94E-04*	2.76E-02	3.32E-01	*8.91E-04*	1.00E-02	*8.91E-04*	*2.97E-03*	*1.49E-03*	7.78E-03	10.61
July 27	39.22	*9.13E-04*	*6.09E-04*	*1.52E-03*	*6.09E-04*	6.21E-02	3.45E-01	*9.13E-04*	1.97E-02	*9.13E-04*	*3.04E-03*	*1.52E-03*	1.55E-02	16.31
August 2	83.00	*9.58E-04*	*6.38E-04*	*1.60E-03*	*6.38E-04*	8.04E-02	9.58E-01	*9.58E-04*	3.82E-02	*9.58E-04*	*3.19E-03*	*1.60E-03*	2.13E-02	----
August 8	23.58	*9.14E-04*	*6.09E-04*	*1.52E-03*	*6.09E-04*	4.50E-02	3.67E-01	*9.14E-04*	9.32E-03	*9.14E-04*	*3.05E-03*	*1.52E-03*	7.98E-03	7.75
August 14	36.82	*8.71E-04*	*5.81E-04*	*1.45E-03*	*5.81E-04*	8.48E-02	7.55E-01	*8.71E-04*	3.14E-02	*8.71E-04*	*2.90E-03*	*1.45E-03*	7.90E-03	3.66
August 20	**34.92**	***1.13E-03***	***7.51E-04***	***1.88E-03***	***7.51E-04***	**4.26E-02**	**5.58E-01**	***1.13E-03***	**1.56E-02**	***1.13E-03***	***3.76E-03***	***1.88E-03***	**1.19E-02**	8.99
August 26	42.15	*9.26E-04*	*6.17E-04*	*1.54E-03*	*6.17E-04*	4.72E-02	5.16E-01	*9.26E-04*	1.59E-02	*9.26E-04*	*3.09E-03*	*1.54E-03*	1.72E-02	2.46
September 1	20.15	*9.75E-04*	*6.50E-04*	*1.63E-03*	*6.50E-04*	4.89E-02	4.80E-01	*9.75E-04*	1.09E-02	*9.75E-04*	*3.25E-03*	*1.63E-03*	6.70E-03	8.11
September 7	18.16	*9.98E-04*	*6.65E-04*	*1.66E-03*	*6.65E-04*	6.98E-02	1.78E-01	*9.98E-04*	6.58E-03	*9.98E-04*	*3.33E-03*	*1.66E-03*	5.32E-03	3.96
September 13	17.12	*9.55E-04*	*6.36E-04*	*1.59E-03*	*6.36E-04*	4.79E-02	1.67E-01	*9.55E-04*	5.09E-03	*9.55E-04*	*3.18E-03*	*1.59E-03*	5.47E-03	2.83
September 19	**27.14**	***1.18E-03***	***7.87E-04***	***1.97E-03***	***7.87E-04***	**4.03E-02**	**3.08E-01**	***1.18E-03***	**1.29E-02**	***1.18E-03***	***3.93E-03***	***1.97E-03***	**1.12E-02**	8.16
September 25	**35.09**	***1.09E-03***	***7.26E-04***	***1.82E-03***	***7.26E-04***	**4.71E-02**	**5.72E-01**	***1.09E-03***	**2.61E-02**	***1.09E-03***	***3.63E-03***	***1.82E-03***	**8.94E-03**	3.41
No. Valid Samples	12	12	12	12	12	12	12	12	12	12	12	12	12	14
% Valid Data	80%	80%	80%	80%	80%	80%	80%	80%	80%	80%	80%	80%	80%	93%
Arithmetic Mean	38.25	9.65E-04	6.43E-04	1.75E-03	6.43E-04	5.35E-02	5.32E-01	1.46E-03	1.98E-02	1.04E-03	3.22E-03	1.61E-03	1.26E-02	9.16
Geometric Mean	33.73	9.61E-04	6.41E-04	1.70E-03	6.41E-04	5.16E-02	4.60E-01	1.11E-03	1.63E-02	1.01E-03	3.20E-03	1.60E-03	1.08E-02	6.51
Max Sample	95.38	1.18E-03	7.87E-04	3.71E-03	7.87E-04	8.48E-02	1.28	8.32E-03	4.79E-02	2.00E-03	3.93E-03	1.97E-03	3.94E-02	36.52
Min Sample	17.12	8.66E-04	5.77E-04	1.44E-03	5.77E-04	2.76E-02	1.67E-01	8.66E-04	5.09E-03	8.66E-04	2.89E-03	1.44E-03	5.32E-03	1.79
July Max	95.38	9.13E-04	6.09E-04	3.71E-03	6.09E-04	6.21E-02	1.28	8.32E-03	4.79E-02	2.00E-03	3.04E-03	1.52E-03	3.94E-02	36.52
August Max	83.00	1.13E-03	7.51E-04	1.88E-03	7.51E-04	8.48E-02	9.58E-01	1.13E-03	3.82E-02	1.13E-03	3.76E-03	1.88E-03	2.13E-02	8.99
September Max	35.09	1.18E-03	7.87E-04	1.97E-03	7.87E-04	6.98E-02	5.72E-01	1.18E-03	2.61E-02	1.18E-03	3.93E-03	1.97E-03	1.12E-02	8.16
90th Percentile	67.87	1.11E-03	7.41E-04	1.93E-03	7.41E-04	7.62E-02	8.77E-01	1.16E-03	3.67E-02	1.16E-03	3.71E-03	1.85E-03	1.96E-02	15.54
95th Percentile	86.72	1.14E-03	7.62E-04	2.49E-03	7.62E-04	8.18E-02	1.05	3.32E-03	4.11E-02	1.43E-03	3.81E-03	1.90E-03	2.67E-02	23.39
Comparison Limit	120	0.3	0.025	0.5	0.1	50	4	0.5	0.4	0.2	10	2	120	27
No. > Limit	0	0	0	0	0	0	0	0	0	0	0	0	0	1
MDL (µg)	2,300	3	2	5	2	4	20	3	1	3	10	5	5	15
No. < MDL	0	15	15	14	15	0	0	14	0	14	15	15	0	0

All non-detectable results (i.e., < MDL) are reported as ½ MDL and are denoted by italics and underlining.
N/A: Not applicable
----: Invalid sample (Invalid samples that were used in calculations are identified in bold)

Gallinger Road Station Monitoring Results
(concentrations expressed in µg/m³)

Date	TSP	As	Cd	Cr	Co	Cu	Fe	Pb	Mn	Ni	Se	V	Zn	$PM_{2.5}$
July 3	56.66	*9.95E-04*	*6.63E-04*	*1.66E-03*	*6.63E-04*	1.07E-01	9.82E-01	*9.95E-04*	3.82E-02	*9.95E-04*	*3.32E-03*	*1.66E-03*	1.35E-02	13.11
July 9	103.88	*1.02E-03*	*6.79E-04*	5.43E-03	*6.79E-04*	1.42E-01	2.40	2.24E-03	6.60E-02	3.26E-03	*3.39E-03*	4.14E-03	1.93E-02	**2.75**
July 15	114.56	*9.99E-04*	*6.66E-04*	4.80E-03	*6.66E-04*	1.15E-01	1.99	*9.99E-04*	5.37E-02	2.80E-03	*3.33E-03*	3.60E-03	2.19E-02	26.18
July 21	44.62	*9.59E-04*	*6.39E-04*	*1.60E-03*	*6.39E-04*	9.65E-02	8.50E-01	*9.59E-04*	2.15E-02	*9.59E-04*	*3.20E-03*	*1.60E-03*	9.78E-03	8.91
July 27	44.60	*9.72E-04*	*6.48E-04*	*1.62E-03*	*6.48E-04*	1.33E-01	4.52E-01	*9.72E-04*	1.85E-02	*9.72E-04*	*3.24E-03*	*1.62E-03*	1.52E-02	9.45
August 2	99.66	*1.02E-03*	*6.78E-04*	*1.69E-03*	*6.78E-04*	1.09E-01	9.56E-01	6.10E-03	4.49E-02	*1.02E-03*	*3.39E-03*	*1.69E-03*	4.06E-02	40.57
August 8	20.27	*9.84E-04*	*6.56E-04*	*1.64E-03*	*6.56E-04*	1.26E-01	2.39E-01	*9.84E-04*	7.15E-03	*9.84E-04*	*3.28E-03*	*1.64E-03*	7.81E-03	8.95
August 14	52.98	*9.72E-04*	*6.48E-04*	*1.62E-03*	*6.48E-04*	6.80E-02	9.59E-01	*9.72E-04*	3.03E-02	*9.72E-04*	*3.24E-03*	*1.62E-03*	1.12E-02	7.37
August 20	55.66	*9.08E-04*	*6.05E-04*	*1.51E-03*	*6.05E-04*	6.17E-02	9.74E-01	*9.08E-04*	2.78E-02	*9.08E-04*	*3.03E-03*	*1.51E-03*	1.85E-02	6.33
August 26	11.45	*8.85E-04*	*5.90E-04*	*1.48E-03*	*5.90E-04*	4.33E-02	8.44E-02	*8.85E-04*	3.19E-03	*8.85E-04*	*2.95E-03*	*1.48E-03*	5.43E-03	3.29
September 1	17.13	*9.34E-04*	*6.23E-04*	*1.56E-03*	*6.23E-04*	4.26E-02	2.77E-01	*9.34E-04*	7.78E-03	*9.34E-04*	*3.11E-03*	*1.56E-03*	6.35E-03	6.41
September 7	21.67	*9.31E-04*	*6.21E-04*	*1.55E-03*	*6.21E-04*	2.72E-02	1.98E-01	*9.31E-04*	8.75E-03	*9.31E-04*	*3.10E-03*	*1.55E-03*	9.31E-03	3.62
September 13	17.15	*9.12E-04*	*6.08E-04*	*1.52E-03*	*6.08E-04*	3.97E-02	1.53E-01	*9.12E-04*	4.62E-03	*9.12E-04*	*3.04E-03*	*1.52E-03*	4.68E-03	4.25
September 19	30.45	*1.02E-03*	*6.80E-04*	*1.70E-03*	*6.80E-04*	4.77E-02	3.52E-01	*1.02E-03*	1.36E-02	*1.02E-03*	*3.40E-03*	*1.70E-03*	1.16E-02	**5.73**
September 25	55.95	*9.26E-04*	*6.18E-04*	*1.54E-03*	*6.18E-04*	4.11E-02	1.12	1.91E-03	4.31E-02	*9.26E-04*	*3.09E-03*	*1.54E-03*	2.95E-02	2.41
No. Valid Samples	15	15	15	15	15	15	15	15	15	15	15	15	15	13
% Valid Data	100%	100%	100%	100%	100%	100%	100%	100%	100%	100%	100%	100%	100%	87%
Arithmetic Mean	49.78	9.62E-04	6.41E-04	2.06E-03	6.41E-04	8.00E-02	7.99E-01	1.45E-03	2.59E-02	1.23E-03	3.21E-03	1.90E-03	1.50E-02	9.95
Geometric Mean	39.79	9.61E-04	6.41E-04	1.86E-03	6.41E-04	7.03E-02	5.44E-01	1.20E-03	1.83E-02	1.11E-03	3.20E-03	1.79E-03	1.25E-02	7.11
Max Sample	114.56	1.02E-03	6.80E-04	5.43E-03	6.80E-04	1.42E-01	2.40	6.10E-03	6.60E-02	3.26E-03	3.40E-03	4.14E-03	4.06E-02	40.57
Min Sample	11.45	8.85E-04	5.90E-04	1.48E-03	5.90E-04	2.72E-02	8.44E-02	8.85E-04	3.19E-03	8.85E-04	2.95E-03	1.48E-03	4.68E-03	2.41
July Max	114.56	1.02E-03	6.79E-04	5.43E-03	6.79E-04	1.42E-01	2.40	2.24E-03	6.60E-02	3.26E-03	3.39E-03	4.14E-03	2.19E-02	26.18
August Max	99.66	1.02E-03	6.78E-04	1.69E-03	6.78E-04	1.26E-01	9.74E-01	6.10E-03	4.49E-02	1.02E-03	3.39E-03	1.69E-03	4.06E-02	40.57
September Max	55.95	1.02E-03	6.80E-04	1.70E-03	6.80E-04	4.77E-02	1.12	1.91E-03	4.31E-02	1.02E-03	3.40E-03	1.70E-03	2.95E-02	6.41
90th Percentile	102.19	1.02E-03	6.79E-04	3.56E-03	6.79E-04	1.30E-01	1.64	2.11E-03	5.02E-02	2.09E-03	3.39E-03	2.84E-03	2.64E-02	20.95
95th Percentile	107.08	1.02E-03	6.79E-04	4.99E-03	6.79E-04	1.36E-01	2.12	3.40E-03	5.74E-02	2.94E-03	3.40E-03	3.76E-03	3.28E-02	30.50
Comparison Limit	120	0.3	0.025	0.5	0.1	50	4	0.5	0.4	0.2	10	2	120	27
No. > Limit	0	0	0	0	0	0	0	0	0	0	0	0	0	1
MDL (µg)	2,300	3	2	5	2	4	20	3	1	3	10	5	5	15
No. < MDL	0	15	15	13	15	0	0	12	0	13	15	13	0	0

All non-detectable results (i.e., < MDL) are reported as ½ MDL and are denoted by italics and underlining.
N/A: Not applicable
----: Invalid sample (Invalid samples that were used in calculations are identified in bold)

Northwest Station Monitoring Results
(concentrations expressed in µg/m^3)

Date	TSP	As	Cd	Cr	Co	Cu	Fe	Pb	Mn	Ni	Se	V	Zn	$PM_{2.5}$
July 3	36.58	*8.92E-04*	*5.95E-04*	*1.49E-03*	*5.95E-04*	1.09E-01	4.50E-01	*8.92E-04*	2.58E-02	*8.92E-04*	*2.97E-03*	*1.49E-03*	8.39E-03	11.31
July 9	20.38	*9.96E-04*	*6.64E-04*	*1.66E-03*	*6.64E-04*	1.62E-01	3.41E-01	*9.96E-04*	1.06E-02	*9.96E-04*	*3.32E-03*	*1.66E-03*	6.91E-03	----
July 15	49.98	*9.92E-04*	*6.61E-04*	*1.65E-03*	*6.61E-04*	1.60E-01	2.49E-01	*9.92E-04*	1.12E-02	*9.92E-04*	*3.31E-03*	*1.65E-03*	1.20E-02	26.69
July 21	65.97	*9.70E-04*	*6.47E-04*	*1.62E-03*	*6.47E-04*	8.86E-02	1.62E+00	*9.70E-04*	4.66E-02	*9.70E-04*	*3.23E-03*	3.56E-03	2.30E-02	12.14
July 27	77.06	*9.80E-04*	*6.53E-04*	*1.63E-03*	*6.53E-04*	1.41E-01	1.45E+00	3.53E-03	4.68E-02	*9.80E-04*	*3.27E-03*	3.59E-03	2.55E-02	12.89
August 2	65.49	*1.01E-03*	*6.72E-04*	*1.68E-03*	*6.72E-04*	1.38E-01	2.30E-01	*1.01E-03*	2.15E-02	*1.01E-03*	*3.36E-03*	*1.68E-03*	1.40E-02	37.01
August 8	24.08	*8.70E-04*	*5.80E-04*	*1.45E-03*	*5.80E-04*	7.95E-02	2.43E-01	*8.70E-04*	7.25E-03	*8.70E-04*	*2.90E-03*	*1.45E-03*	6.96E-03	9.81
August 14	33.16	*1.02E-03*	*6.79E-04*	*1.70E-03*	*6.79E-04*	2.90E-01	5.69E-01	*1.02E-03*	2.30E-02	*1.02E-03*	*3.40E-03*	*1.70E-03*	2.02E-02	2.71
August 20	32.34	*1.00E-03*	*6.67E-04*	*1.67E-03*	*6.67E-04*	1.79E-01	6.00E-01	*1.00E-03*	1.83E-02	*1.00E-03*	*3.33E-03*	*1.67E-03*	1.45E-02	6.44
August 26	40.02	*9.39E-04*	*6.26E-04*	*1.57E-03*	*6.26E-04*	1.27E-01	6.95E-01	*9.39E-04*	1.70E-02	*9.39E-04*	*3.13E-03*	*1.57E-03*	1.06E-02	2.99
September 1	44.07	*9.16E-04*	*6.10E-04*	*1.53E-03*	*6.10E-04*	2.30E-01	1.08E+00	*9.16E-04*	2.52E-02	*9.16E-04*	*3.05E-03*	*1.53E-03*	1.49E-02	7.40
September 7	20.42	*8.70E-04*	*5.80E-04*	*1.45E-03*	*5.80E-04*	1.59E-01	2.80E-01	*8.70E-04*	8.70E-03	*8.70E-04*	*2.90E-03*	*1.45E-03*	7.14E-03	3.66
September 13	48.16	*9.30E-04*	*6.20E-04*	*1.55E-03*	*6.20E-04*	1.87E-01	1.12E+00	*9.30E-04*	2.58E-02	*9.30E-04*	*3.10E-03*	*1.55E-03*	1.30E-02	2.62
September 19	31.06	*9.47E-04*	*6.31E-04*	*1.58E-03*	*6.31E-04*	1.33E-01	4.09E-01	*9.47E-04*	1.46E-02	*9.47E-04*	*3.16E-03*	*1.58E-03*	1.02E-02	7.40
September 25	35.45	*9.56E-04*	*6.38E-04*	*1.59E-03*	*6.38E-04*	2.10E-01	7.01E-01	*9.56E-04*	1.64E-02	*9.56E-04*	*3.19E-03*	*1.59E-03*	1.14E-02	N/A
No. Valid Samples	15	15	15	15	15	15	15	15	15	15	15	15	15	13
% Valid Data	100%	100%	100%	100%	100%	100%	100%	100%	100%	100%	100%	100%	100%	93%
Arithmetic Mean	41.61	9.52E-04	6.35E-04	1.59E-03	6.35E-04	1.59E-01	6.69E-01	1.12E-03	2.12E-02	9.52E-04	3.17E-03	1.85E-03	1.33E-02	11.01
Geometric Mean	38.53	9.51E-04	6.34E-04	1.59E-03	6.34E-04	1.51E-01	5.46E-01	1.04E-03	1.85E-02	9.51E-04	3.17E-03	1.76E-03	1.22E-02	7.90
Max Sample	77.06	1.02E-03	6.79E-04	1.70E-03	6.79E-04	2.90E-01	1.62	3.53E-03	4.68E-02	1.02E-03	3.40E-03	3.59E-03	2.55E-02	37.01
Min Sample	20.38	8.70E-04	5.80E-04	1.45E-03	5.80E-04	7.95E-02	2.30E-01	8.70E-04	7.25E-03	8.70E-04	2.90E-03	1.45E-03	6.91E-03	2.62
July Max	77.06	9.96E-04	6.64E-04	1.66E-03	6.64E-04	1.62E-01	1.62	3.53E-03	4.68E-02	9.96E-04	3.32E-03	3.59E-03	2.55E-02	26.69
August Max	65.49	1.02E-03	6.79E-04	1.70E-03	6.79E-04	2.90E-01	6.95E-01	1.02E-03	2.30E-02	1.02E-03	3.40E-03	1.70E-03	2.02E-02	37.01
September Max	48.16	9.56E-04	6.38E-04	1.59E-03	6.38E-04	2.30E-01	1.12	9.56E-04	2.58E-02	9.56E-04	3.19E-03	1.59E-03	1.49E-02	7.40
90th Percentile	65.78	1.00E-03	6.70E-04	1.67E-03	6.70E-04	2.22E-01	1.32	1.01E-03	3.83E-02	1.00E-03	3.35E-03	2.81E-03	2.19E-02	23.93
95th Percentile	69.29	1.01E-03	6.74E-04	1.69E-03	6.74E-04	2.48E-01	1.50	1.77E-03	4.66E-02	1.01E-03	3.37E-03	3.57E-03	2.37E-02	30.82
Comparison Limit	120	0.3	0.025	0.5	0.1	50	4	0.5	0.4	0.2	10	2	120	27
No. > Limit	0	0	0	0	0	0	0	0	0	0	0	0	0	1
MDL (µg)	2,300	3	2	5	2	4	20	3	1	3	10	5	5	15
No. < MDL	0	15	15	15	15	0	0	14	0	15	15	13	0	0

All non-detectable results (i.e., < MDL) are reported as ½ MDL and are denoted by italics and underlining.
N/A: Not applicable
----: Invalid sample (Invalid samples that were used in calculations are identified in bold)

APPENDIX A-2:

TOTAL DUSTFALL SAMPLING RESULTS

Tait Road Station Monitoring Results (concentrations expressed in g/m²/30 days)						
Month	**No. Exposure Days**	**Insoluble Dustfall**	**Soluble Dustfall**	**Total Dustfall**	**Fixed Dustfall**	**Volatile Dustfall**
July	31	1.20	1.14	2.34	1.41	0.93
August	31	2.94	2.43	5.37	1.86	3.51
September	30	1.14	0.69	1.83	0.99	0.84
		No. Valid Samples		3	-	-
		% Valid Data		100%	-	-
		Arithmetic Mean		3.18	1.42	1.76
		Max Monthly Concentration		5.37	1.86	3.51
		Min Monthly Concentration		1.83	0.99	0.84
		Comparison Limit		7	-	-
		No. > Limit		0	-	-
		MDL		0.3	-	-
		No. < MDL		0	-	-

Gallinger Road Station Monitoring Results (concentrations expressed in g/m²/30 days)						
Month	**No. Exposure Days**	**Insoluble Dustfall**	**Soluble Dustfall**	**Total Dustfall**	**Fixed Dustfall**	**Volatile Dustfall**
July	31	1.17	0.81	1.98	1.29	0.69
August	31	2.37	2.58	4.95	1.44	3.54
September	30	0.78	0.72	1.50	0.69	0.81
		No. Valid Samples		3	-	-
		% Valid Data		100%	-	-
		Arithmetic Mean		2.81	1.14	1.68
		Max Monthly Concentration		4.95	1.44	3.54
		Min Monthly Concentration		1.50	0.69	0.69
		Comparison Limit		7	-	-
		No. > Limit		0	-	-
		MDL		0.3	-	-
		No. < MDL		0	-	-

Northwest Station Monitoring Results (concentrations expressed in g/m²/30 days)						
Month	**No. Exposure Days**	**Insoluble Dustfall**	**Soluble Dustfall**	**Total Dustfall**	**Fixed Dustfall**	**Volatile Dustfall**
July	31	0.51	0.81	1.35	0.66	0.69
August	-	-	-	-	-	-
September	**61**	**0.81**	**0.87**	**1.68**	**0.72**	**0.96**
		No. Valid Samples		1	-	-
		% Valid Data		33%	-	-
		Arithmetic Mean		1.52	0.69	0.83
		Max Monthly Concentration		1.68	0.72	0.96
		Min Monthly Concentration		1.35	0.66	0.69
		Comparison Limit		7	-	-
		No. > Limit		0	-	-
		MDL		0.3	-	-
		No. < MDL		0	-	-

NOP1 Station Monitoring Results (concentrations expressed in g/m²/30 days)				
Month	**No. Exposure Days**	**Insoluble Dustfall**	**Soluble Dustfall**	**Total Dustfall**
July	31	25.02	9.90	34.80
August	31	9.30	2.70	12.03
September	30	1.89	0.75	2.64
		No. Valid Samples		3
		% Valid Data		100%
		Arithmetic Mean		16.49
		Max Monthly Concentration		34.80
		Min Monthly Concentration		2.64
		Comparison Limit		7
		No. > Limit		2
		MDL		0.3
		No. < MDL		0

WCP1 Station Monitoring Results (concentrations expressed in g/m²/30 days)				
Month	**No. Exposure Days**	**Insoluble Dustfall**	**Soluble Dustfall**	**Total Dustfall**
July	31	30.30	36.30	66.60
August	31	110.10	38.40	148.50
September	30	134.40	91.20	225.60
			No. Valid Samples	3
			% Valid Data	100%
			Arithmetic Mean	146.90
			Max Monthly Concentration	225.60
			Min Monthly Concentration	66.60
			Comparison Limit	7
			No. > Limit	3
			MDL	0.3
			No. < MDL	0

GH1 Station Monitoring Results (concentrations expressed in g/m²/30 days)				
Month	**No. Exposure Days**	**Insoluble Dustfall**	**Soluble Dustfall**	**Total Dustfall**
July	31	18.72	27.75	46.50
August	31	36.00	33.00	69.00
September	30	14.73	15.63	30.60
			No. Valid Samples	3
			% Valid Data	100%
			Arithmetic Mean	48.70
			Max Monthly Concentration	69.00
			Min Monthly Concentration	30.60
			Comparison Limit	7
			No. > Limit	3
			MDL	0.3
			No. < MDL	0

CP1 Station Monitoring Results (concentrations expressed in g/m²/30 days)				
Month	**No. Exposure Days**	**Insoluble Dustfall**	**Soluble Dustfall**	**Total Dustfall**
July	31	3.87	8.37	12.24
August	31	22.62	28.83	51.60
September	30	0.78	1.05	1.83

No. Valid Samples	3
% Valid Data	100%
Arithmetic Mean	21.89
Max Monthly Concentration	51.60
Min Monthly Concentration	1.83
Comparison Limit	7
No. > Limit	2
MDL	0.3
No. < MDL	0

newgold Rainy River

SPP1 Station Monitoring Results (concentrations expressed in g/m^2/30 days)				
Month	**No. Exposure Days**	**Insoluble Dustfall**	**Soluble Dustfall**	**Total Dustfall**
July 7	7	102.00	75.00	176.70
July 14	7	342.00	188.70	528.00
July 21	7	145.80	105.30	251.10
July 28	7	263.40	155.10	417.00
August 4	7	124.80	114.60	239.40
August 11	7	11.94	19.62	31.50
August 18	7	8.25	10.50	18.75
August 25	7	22.05	35.10	57.30
September 1	7	21.99	17.31	39.30
September 8	7	182.40	143.10	327.00
September 15	7	223.80	162.00	387.00
September 22	7	179.10	219.90	399.00
September 29	7	8.82	33.30	42.00

No. Valid Samples	13
% Valid Data	100%
Arithmetic Mean	224.16
Max Concentration	528.00
Min Concentration	18.75
Comparison Limit	7
No. > Limit	13
MDL	1.29
No. < MDL	0

APPENDIX A-3:

DUSTFALL METALS SAMPLING RESULTS

newgold Rainy River

SPP1 Station Monitoring Results
(concentrations expressed in g/m^2/30 days)

Metal	July 7	July 14	July 21	July 28	Aug 4	Aug 11	Aug 18	Aug 25	Sept 1	Sept 8	Sept 15	Sept 22	Sept 29	Max
Aluminum	2.09E-01	2.50E-01	2.21E-01	2.00E-01	1.67E-01	1.03E-01	8.76E-02	1.66E-01	2.20E-01	1.54E-01	3.30E-01	2.67E-01	3.27E-02	3.30E-01
Antimony	8.22E-05	1.45E-04	1.26E-04	7.05E-05	6.84E-05	2.94E-05	2.31E-05	9.12E-05	9.00E-05	5.10E-05	9.00E-05	1.02E-04	2.28E-05	1.45E-04
Arsenic	5.40E-04	9.00E-04	7.56E-04	6.45E-04	5.04E-04	1.36E-04	1.02E-04	3.39E-04	3.57E-04	4.08E-04	6.78E-04	4.95E-04	2.40E-05	9.00E-04
Barium	4.02E-03	5.61E-03	3.33E-03	4.77E-03	4.68E-03	1.45E-03	1.36E-03	1.76E-03	3.18E-03	3.09E-03	6.09E-03	4.98E-03	6.06E-04	6.09E-03
Beryllium	*5.10E-05*	*4.80E-05*	*5.10E-05*	*4.20E-05*	*4.50E-05*	*5.85E-05*	*4.80E-05*	*6.75E-05*	*9.15E-05*	*8.25E-05*	*6.45E-05*	*1.65E-04*	*4.80E-05*	*1.65E-04*
Bismuth	*5.10E-05*	*4.80E-05*	*5.10E-05*	*4.20E-05*	*4.50E-05*	*5.85E-05*	*4.80E-05*	*6.75E-05*	*9.15E-05*	*8.25E-05*	*6.45E-05*	*1.65E-04*	*4.80E-05*	*1.65E-04*
Boron	9.06E-03	2.27E-02	1.14E-02	1.06E-02	1.10E-02	5.25E-03	4.53E-03	9.93E-03	1.14E-02	4.80E-03	1.46E-02	9.90E-03	*9.60E-04*	2.27E-02
Cadmium	2.09E-04	2.54E-04	2.27E-04	2.50E-04	1.35E-04	4.95E-05	3.81E-05	9.75E-05	1.08E-04	1.53E-04	4.83E-04	2.85E-04	*4.80E-06*	4.83E-04
Calcium	3.48	5.01	4.47	6.51	1.75	1.35	1.01	6.03	2.91	4.17	4.74	2.91	2.51	6.51
Chromium	5.13E-04	5.37E-04	5.82E-04	1.04E-03	3.51E-04	1.83E-04	1.41E-04	2.82E-04	4.53E-04	7.86E-04	1.09E-03	1.47E-03	2.82E-04	1.47E-03
Cobalt	1.70E-04	2.51E-04	1.57E-04	2.52E-04	1.53E-04	9.03E-05	7.14E-05	1.25E-04	2.01E-04	1.32E-04	4.20E-04	2.52E-04	1.95E-05	4.20E-04
Copper	3.24E-02	3.27E-02	3.75E-02	4.83E-02	2.97E-02	2.33E-02	1.61E-02	3.57E-02	1.14E-02	4.62E-02	7.89E-02	4.71E-02	1.93E-03	7.89E-02
Iron	2.85E-01	3.42E-01	2.96E-01	3.87E-01	2.16E-01	1.37E-01	1.06E-01	1.63E-01	2.49E-01	1.88E-01	4.26E-01	3.18E-01	4.26E-02	4.26E-01
Lead	3.24E-03	6.15E-03	4.95E-03	2.54E-03	3.66E-03	1.54E-03	1.23E-03	1.46E-03	2.82E-03	1.81E-03	5.19E-03	3.96E-03	3.09E-04	6.15E-03
Lithium	1.26E-03	*4.80E-04*	*5.10E-04*	*4.20E-04*	*4.50E-04*	*5.85E-04*	*4.80E-04*	*6.75E-04*	*9.15E-04*	*8.25E-04*	*6.45E-04*	*1.65E-03*	*4.80E-04*	*1.65E-03*
Magnesium	1.40	1.88	1.51	1.30	1.07	6.63E-01	3.66E-01	1.06	6.99E-01	1.03	2.13	1.31	3.06E-01	2.13
Manganese	3.12E-02	6.18E-02	3.96E-02	3.09E-02	3.03E-02	1.80E-02	8.70E-03	1.55E-02	2.40E-02	3.18E-02	5.76E-02	4.41E-02	2.34E-03	6.18E-02
Molybdenum	5.55E-04	1.40E-03	6.12E-04	9.15E-04	5.16E-04	4.47E-04	3.06E-04	6.12E-04	6.45E-04	8.58E-04	2.02E-03	1.35E-03	7.23E-05	2.02E-03
Nickel	2.57E-03	1.11E-02	3.60E-03	6.18E-03	4.08E-03	1.09E-03	1.10E-03	5.22E-03	6.30E-03	2.21E-03	1.00E-02	4.02E-03	2.61E-04	1.11E-02
Phosphorus	4.83	11.80	8.31	13.00	6.06	4.23	2.06	10.30	2.95	13.00	16.20	13.20	2.48	16.20
Potassium	7.59	19.90	10.30	17.30	9.96	6.54	4.95	13.40	4.92	13.70	22.40	18.00	1.04	22.40
Selenium	4.17E-04	7.20E-04	4.86E-04	1.09E-03	5.49E-04	2.88E-04	*9.60E-05*	5.85E-04	*1.80E-04*	6.90E-04	7.68E-04	7.80E-04	*9.60E-05*	1.09E-03
Silicon	6.45E-01	7.17E-01	5.07E-01	7.17E-01	2.59E-01	2.19E-01	5.19E-01	2.72E-01	4.20E-01	3.84E-01	8.46E-01	6.42E-01	7.29E-02	8.46E-01
Silver	6.36E-05	1.09E-04	1.46E-04	9.06E-05	7.68E-05	4.11E-05	3.06E-05	4.29E-05	5.10E-05	6.12E-05	1.11E-04	2.59E-04	8.82E-06	2.59E-04
Sodium	2.25E-01	8.97E-01	5.76E-01	2.54	5.58E-01	3.75E-01	4.41E-01	3.30	7.11E-01	2.85	1.66	3.57	3.33E-01	3.57
Strontium	7.95E-03	1.24E-02	6.84E-03	9.72E-03	8.37E-03	3.84E-03	3.57E-03	9.39E-03	1.23E-02	6.21E-03	1.34E-02	1.09E-02	1.15E-03	1.34E-02
Thallium	*1.01E-05*	*9.60E-06*	*1.01E-05*	*8.55E-06*	*8.85E-06*	*1.16E-05*	*9.60E-06*	*1.35E-05*	*1.80E-05*	*1.65E-05*	*1.28E-05*	*3.30E-05*	*9.60E-06*	*3.30E-05*
Tin	3.93E-05	*9.60E-06*	*1.01E-05*	*8.55E-06*	*8.85E-06*	*1.16E-05*	*9.60E-06*	*1.35E-05*	*1.80E-05*	*1.65E-05*	*1.28E-05*	*3.30E-05*	*9.60E-06*	3.93E-05
Titanium	3.72E-03	2.79E-03	3.06E-03	1.95E-03	*8.85E-04*	*1.16E-03*	*9.60E-04*	*1.35E-03*	*1.80E-03*	*1.65E-03*	6.39E-03	*3.30E-03*	*9.60E-04*	6.39E-03
Uranium	1.21E-05	1.27E-05	9.48E-06	1.79E-05	6.93E-06	7.17E-06	3.03E-06	6.15E-06	4.65E-04	1.32E-05	4.47E-05	1.58E-04	*9.60E-07*	4.65E-04
Vanadium	3.90E-04	4.11E-04	3.42E-04	5.58E-04	2.28E-04	*1.16E-04*	*9.60E-05*	*1.35E-04*	3.90E-04	3.30E-04	7.14E-04	*3.30E-04*	*9.60E-05*	7.14E-04
Zinc	1.11E-01	2.00E-01	1.66E-01	2.03E-01	1.04E-01	6.18E-02	4.20E-02	9.99E-02	5.82E-02	8.13E-02	2.72E-01	1.55E-01	5.94E-03	2.72E-01

newgold Rainy River

NOP1 Station Monitoring Results (concentrations expressed in g/m²/30 days)				
Metal	**July**	**August**	**September**	**Max**
Aluminum	1.09E-01	1.26E-01	1.93E-02	1.26E-01
Antimony	2.34E-05	1.74E-05	*2.55E-06*	2.34E-05
Arsenic	7.65E-05	8.22E-05	1.98E-05	8.22E-05
Barium	6.96E-04	5.25E-04	1.25E-04	6.96E-04
Beryllium	*1.35E-05*	*9.45E-06*	*1.31E-05*	*1.35E-05*
Bismuth	*1.35E-05*	1.98E-05	*1.31E-05*	1.98E-05
Boron	*2.70E-04*	*1.95E-04*	*2.55E-04*	*2.70E-04*
Cadmium	2.18E-05	2.03E-05	9.45E-06	2.18E-05
Calcium	5.04E-01	3.06E-01	3.75E-02	5.04E-01
Chromium	1.07E-04	1.43E-04	3.21E-05	1.43E-04
Cobalt	4.86E-05	3.12E-05	6.60E-06	4.86E-05
Copper	7.11E-04	5.85E-04	1.89E-04	7.11E-04
Iron	1.10E-01	9.72E-02	1.35E-02	1.10E-01
Lead	1.15E-03	9.03E-04	9.36E-05	1.15E-03
Lithium	*1.35E-04*	*9.45E-05*	*1.31E-04*	*1.35E-04*
Magnesium	1.40E-01	7.35E-02	1.40E-02	1.40E-01
Manganese	1.14E-02	6.72E-03	7.11E-04	1.14E-02
Molybdenum	1.54E-05	1.30E-05	6.69E-06	1.54E-05
Nickel	1.72E-04	1.07E-04	2.64E-05	1.72E-04
Phosphorus	1.53E-01	7.47E-03	3.78E-02	1.53E-01
Potassium	2.32E-01	3.57E-02	6.39E-02	2.32E-01
Selenium	*2.70E-05*	*1.95E-05*	*2.55E-05*	*2.70E-05*
Silicon	1.55E-01	1.61E-01	3.24E-02	1.61E-01
Silver	1.91E-05	2.18E-05	2.58E-06	2.18E-05
Sodium	2.28E-02	1.63E-02	2.00E-02	2.28E-02
Strontium	9.48E-04	7.26E-04	1.26E-04	9.48E-04
Thallium	*2.70E-06*	*1.95E-06*	*2.55E-06*	*2.70E-06*
Tin	*2.70E-06*	*1.95E-06*	*2.55E-06*	*2.70E-06*
Titanium	2.37E-03	2.22E-03	*2.55E-04*	2.37E-03
Uranium	3.21E-06	2.34E-06	5.10E-07	3.21E-06
Vanadium	1.83E-04	1.44E-04	*2.55E-05*	1.83E-04
Zinc	6.06E-03	5.13E-03	9.72E-04	6.06E-03

WCP1 Station Monitoring Results (concentrations expressed in g/m²/30 days)				
Metal	**July**	**August**	**September**	**Max**
Aluminum	2.29E-02	1.03E-01	2.28E-01	2.28E-01
Antimony	*3.45E-06*	1.14E-05	1.92E-05	1.92E-05
Arsenic	3.39E-05	1.20E-04	1.94E-04	1.94E-04
Barium	7.26E-04	2.01E-03	3.21E-03	3.21E-03
Beryllium	*1.80E-05*	*1.02E-05*	*2.85E-05*	*2.85E-05*
Bismuth	*1.80E-05*	*1.02E-05*	*2.85E-05*	*2.85E-05*
Boron	1.83E-03	4.32E-03	4.08E-03	4.32E-03
Cadmium	4.26E-05	6.90E-05	1.62E-04	1.62E-04
Calcium	4.86E-01	1.58	2.66	2.66
Chromium	8.70E-05	1.99E-04	5.22E-04	5.22E-04
Cobalt	3.18E-05	1.44E-04	2.87E-04	2.87E-04
Copper	3.84E-03	2.10E-02	4.53E-02	4.53E-02
Iron	3.48E-02	1.43E-01	3.09E-01	3.09E-01
Lead	1.28E-04	2.97E-04	6.12E-04	6.12E-04
Lithium	*1.80E-04*	3.60E-04	*2.85E-04*	3.60E-04
Magnesium	2.29E-01	7.77E-01	1.24	1.24
Manganese	4.80E-03	1.95E-02	2.90E-02	2.90E-02
Molybdenum	9.75E-05	5.70E-04	9.66E-04	9.66E-04
Nickel	4.08E-04	1.62E-03	2.28E-03	2.28E-03
Phosphorus	1.12	4.41	10.70	10.70
Potassium	2.13	6.12	16.00	16.00
Selenium	8.40E-05	3.06E-04	6.96E-04	6.96E-04
Silicon	3.81E-02	2.68E-01	5.79E-01	5.79E-01
Silver	1.25E-05	2.26E-05	3.15E-05	3.15E-05
Sodium	2.18E-01	6.72E-01	2.36	2.36
Strontium	8.46E-04	3.48E-03	4.83E-03	4.83E-03
Thallium	*3.45E-06*	*2.10E-06*	*5.55E-06*	*5.55E-06*
Tin	*3.45E-06*	*2.10E-06*	*5.55E-06*	*5.55E-06*
Titanium	*3.45E-04*	1.59E-03	2.97E-03	2.97E-03
Uranium	4.05E-06	1.13E-05	2.63E-05	2.63E-05
Vanadium	*3.45E-05*	2.73E-04	6.87E-04	6.87E-04
Zinc	1.64E-02	6.42E-02	1.26E-01	1.26E-01

GH1 Station Monitoring Results (concentrations expressed in g/m²/30 days)				
Metal	**July**	**August**	**September**	**Max**
Aluminum	1.47E-02	7.50E-02	7.35E-02	7.50E-02
Antimony	*2.25E-06*	8.40E-06	1.20E-05	1.20E-05
Arsenic	1.62E-05	8.79E-05	5.94E-05	8.79E-05
Barium	2.50E-04	1.01E-03	7.86E-04	1.01E-03
Beryllium	*1.13E-05*	*1.07E-05*	*1.40E-05*	*1.40E-05*
Bismuth	*1.13E-05*	*1.07E-05*	*1.40E-05*	*1.40E-05*
Boron	7.50E-04	1.80E-03	6.00E-04	1.80E-03
Cadmium	4.53E-06	2.60E-05	1.42E-05	2.60E-05
Calcium	1.91E-01	7.35E-01	4.74E-01	7.35E-01
Chromium	6.03E-05	1.81E-04	2.30E-04	2.30E-04
Cobalt	1.47E-05	1.13E-04	5.70E-05	1.13E-04
Copper	2.08E-03	2.10E-02	3.48E-03	2.10E-02
Iron	2.00E-02	1.11E-01	1.09E-01	1.11E-01
Lead	4.56E-05	1.17E-04	8.67E-05	1.17E-04
Lithium	*1.13E-04*	2.46E-04	*1.40E-04*	2.46E-04
Magnesium	1.28E-01	5.16E-01	1.78E-01	5.16E-01
Manganese	1.96E-03	9.51E-03	7.74E-03	9.51E-03
Molybdenum	2.59E-05	3.48E-04	7.98E-05	3.48E-04
Nickel	1.60E-04	7.02E-04	2.64E-04	7.02E-04
Phosphorus	8.73E-01	3.06	1.01	3.06
Potassium	1.39	4.20	1.48	4.20
Selenium	*2.25E-05*	2.67E-04	1.32E-04	2.67E-04
Silicon	2.70E-02	1.79E-01	1.27E-01	1.79E-01
Silver	1.86E-06	7.65E-06	3.63E-06	7.65E-06
Sodium	4.98E-02	5.97E-01	2.84E-01	5.97E-01
Strontium	8.88E-04	2.25E-03	1.05E-03	2.25E-03
Thallium	*2.25E-06*	*2.10E-06*	*2.85E-06*	*2.85E-06*
Tin	*2.25E-06*	*2.10E-06*	6.00E-06	6.00E-06
Titanium	*2.25E-04*	1.23E-03	1.53E-03	1.53E-03
Uranium	6.60E-07	6.84E-06	5.16E-06	6.84E-06
Vanadium	*2.25E-05*	2.01E-04	2.49E-04	2.49E-04
Zinc	8.04E-03	6.27E-02	9.12E-03	6.27E-02

CP1 Station Monitoring Results (concentrations expressed in g/m²/30 days)				
Metal	**July**	**August**	**September**	**Max**
Aluminum	2.78E-03	3.09E-02	7.89E-03	3.09E-02
Antimony	*2.40E-06*	*2.25E-06*	*4.80E-06*	*4.80E-06*
Arsenic	1.17E-05	8.67E-05	1.23E-05	8.67E-05
Barium	8.82E-05	4.59E-03	2.36E-04	4.59E-03
Beryllium	*1.17E-05*	*1.11E-05*	*2.40E-05*	*2.40E-05*
Bismuth	*1.17E-05*	*1.11E-05*	*2.40E-05*	*2.40E-05*
Boron	*2.40E-04*	7.50E-04	*4.80E-04*	7.50E-04
Cadmium	3.18E-06	3.72E-05	*2.40E-06*	3.72E-05
Calcium	2.06E-01	6.03	7.23E-02	6.03
Chromium	2.58E-05	5.79E-05	*2.40E-05*	5.79E-05
Cobalt	7.20E-06	4.77E-05	*4.80E-06*	4.77E-05
Copper	1.30E-04	2.72E-03	9.00E-05	2.72E-03
Iron	3.96E-03	5.61E-02	7.74E-03	5.61E-02
Lead	1.23E-05	6.27E-05	2.40E-05	6.27E-05
Lithium	*1.17E-04*	*1.11E-04*	*2.40E-04*	*2.40E-04*
Magnesium	6.66E-02	3.78E-01	1.65E-02	3.78E-01
Manganese	1.81E-03	1.30E-02	1.02E-03	1.30E-02
Molybdenum	*1.17E-06*	2.99E-05	*2.40E-06*	2.99E-05
Nickel	*1.17E-05*	1.16E-04	*2.40E-05*	1.16E-04
Phosphorus	2.08E-01	7.80E-01	1.56E-02	7.80E-01
Potassium	3.66E-01	1.17	2.49E-02	1.17
Selenium	*2.40E-05*	5.10E-05	*4.80E-05*	5.10E-05
Silicon	4.05E-03	6.51E-02	1.29E-02	6.51E-02
Silver	*2.40E-07*	1.29E-05	*4.80E-07*	1.29E-05
Sodium	2.70E-01	8.31E-01	1.05E-02	8.31E-01
Strontium	2.94E-04	1.19E-02	1.71E-04	1.19E-02
Thallium	*2.40E-06*	*2.25E-06*	*4.80E-06*	*4.80E-06*
Tin	*2.40E-06*	*2.25E-06*	*4.80E-06*	*4.80E-06*
Titanium	*2.40E-04*	6.30E-04	*4.80E-04*	6.30E-04
Uranium	*2.40E-07*	5.70E-06	*4.80E-07*	5.70E-06
Vanadium	*2.40E-05*	8.10E-05	*4.80E-05*	8.10E-05
Zinc	1.10E-03	1.02E-02	4.74E-04	1.02E-02

APPENDIX A-4:

SO_2 AND NO_2 PASSIVE SAMPLING RESULTS

Tait Road Station Monitoring Results (concentrations expressed in µg/m³)		
Month	**SO_2**	**NO_2**
July	*0.13*	1.88
August	*0.13*	0.56
September	*0.13*	1.13
No. Valid Samples	3	3
% Valid data	100%	100%
Arithmetic Mean	*0.13*	1.19
Max Monthly Concentration	*0.13*	1.88
Min Monthly Concentration	*0.13*	0.56
Comparison Limit	30	78
No. > Limit	0	0
MDL	0.26	0.19
No. < MDL	3	0

Gallinger Road Station Monitoring Results (concentrations expressed in µg/m³)		
Month	**SO_2**	**NO_2**
July	*0.13*	0.94
August	*0.13*	0.56
September	*0.13*	0.75
No. Valid Samples	3	3
% Valid data	100%	100%
Arithmetic Mean	*0.13*	0.75
Max Monthly Concentration	*0.13*	0.94
Min Monthly Concentration	*0.13*	0.56
Comparison Limit	30	78
No. > Limit	0	0
MDL	0.26	0.19
No. < MDL	3	0

APPENDIX B:
NOTICE OF EXCEEDANCES FOR Q3 2021

newgold Rainy River

September 13, 2021

Jason Tittlemier
Senior Environmental Officer
Ministry of Environment, Conservation and Parks; Kenora Area Office
808 Robertson Street
Kenora, ON P9N 1X9

Dear Mr. Tittlemier,

NOTIFICATION OF EXCEEDANCE: PM2.5 EXCEEDANCE OF BENCHMARK 1 VALUE (STANDARD) ON JULY 15, 2021 AT THE TAIL ROAD MONITORING STATION

As discussed on the phone on September 9, 2021, please see attached Notification of Exceedance regarding a PM2.5 exceedance of the Standard Benchmark 1 Value (135%) on July 15, 2021 at the New Gold Rainy River Mine (RRM) Tait Road Monitoring Station.

The cause of the exceedance is due to the increased smoke in the area from local wildfires. The other two PQ200 units at RRM also measured very high readings that day (97% and 99%). Below I have also attached the E-Sampler readings for the day which show consistently elevated total suspended particulate readings over the 24 hours from July 15, 2021.

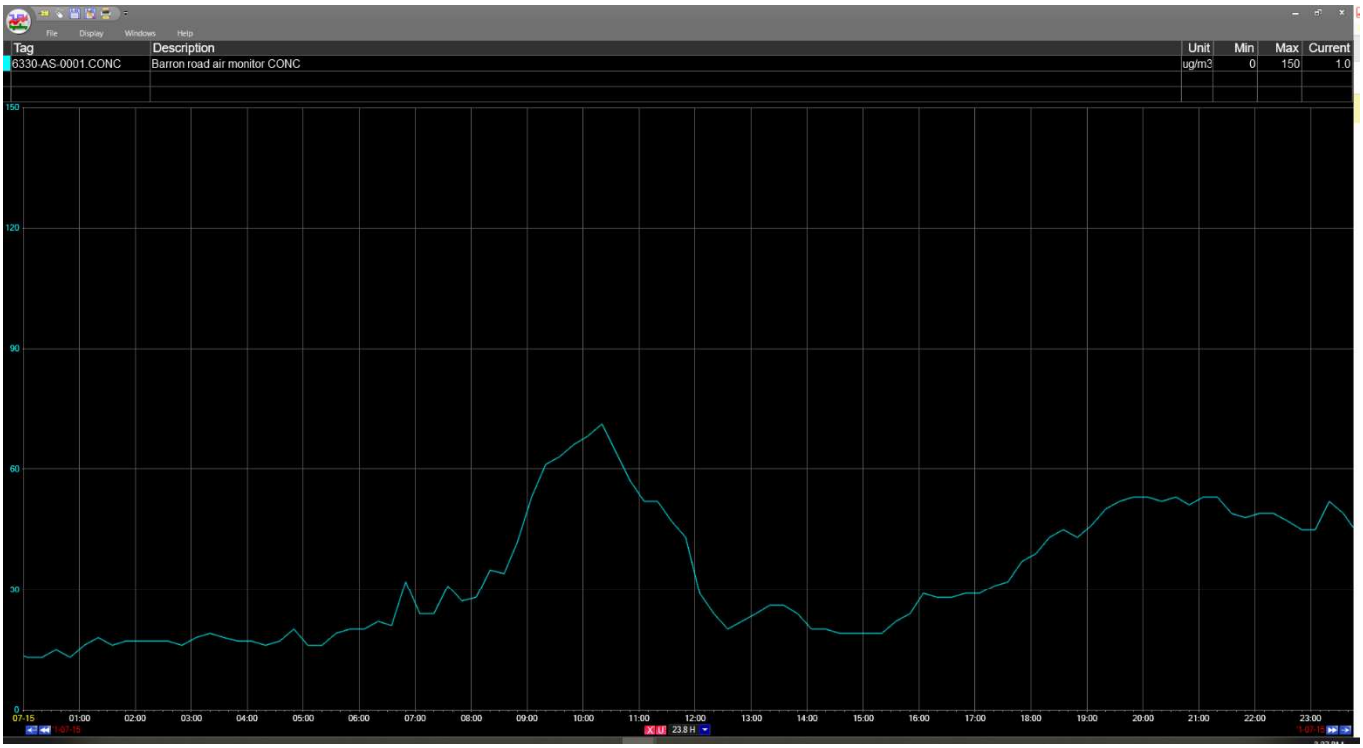

Figure 1 Barron Site E-Sampler readings for July 15, 2021 (ug/m3)

New Gold Inc., Rainy River Project
5967 Highway 11/71, P.O. Box 5
Emo, ON P0W 1E0

T 807-482-2501
F 807-482-2834 www.newgold.com

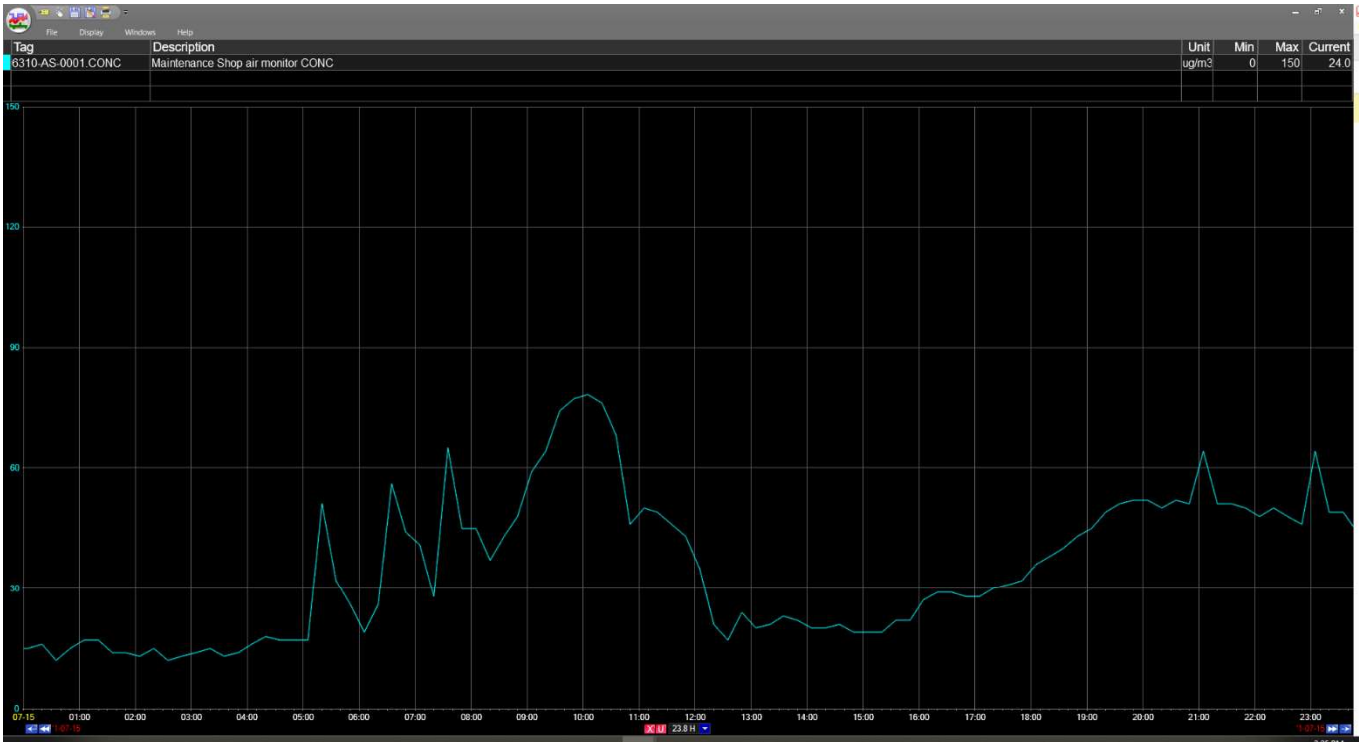

Figure 2 Gallinger Road E-Sampler readings from July 15, 2021 (ug/m3)

Should you have any questions, please do not hesitate to contact the undersigned at: Garnet.Cornell@newgold.com or (807) 276-0106.

Respectfully submitted,

Garnet Cornell
Environment Superintendent

Ontario

Ministry of the Environment and Climate Change

Notification of Exceedance – Local Air Quality Regulation

General Information

Information requested in this notification form is collected under the authority of the *Environmental Protection Act*, R.S.O. 1990 (EPA) and Ontario Regulation 419/05: Air Pollution – Local Air Quality (the Regulation) made under the EPA and will be used to collect information relating to a measured or modelled air-related exceedance as required by s.25(9), s.28(1) and s.30(3) of the Regulation. The Ministry of the Environment and Climate Change (Ministry) may also request additional information.

1. Questions regarding completion and submission of this notification form should be directed to your local Ministry District Office. A list of these District Offices (including fax numbers) is available on the Ministry Internet site at http://www.ontario.ca/environment-and-energy/ministry-environment-and-climate-change-district-locator. A copy of this form may be acquired through the Ministry public web site http://www.ontario.ca/environment-and-energy/rules-air-quality-and-pollution or by contacting any Ministry office.

2. For notification under s.25(9) or s.28(1), the completed notification form should be sent, as soon as practicable, to the local Ministry District Office which has jurisdiction over the area in which the facility is located. A list of these District Offices (including fax numbers) is available on the Ministry Internet site at http://www.ontario.ca/environment-and-energy/ministry-environment-and-climate-change-district-locator.

3. For notification under s.30(3), the completed notification form should be immediately faxed to the local Ministry District Office which has jurisdiction over the area which the facility is located. A list of these District Offices (including fax numbers) is available on the Ministry Internet site at http://www.ontario.ca/environment-and-energy/ministry-environment-and-climate-change-district-locator. If the exceedance is determined outside of the business hours of the District Office then the completed notification form should be faxed to the Spills Action Center (1-800-268-6061).

4. Information on this form may be claimed as confidential but will be subject to the *Freedom of Information and Protection of Privacy Act* (FOIPPA) and the EBR. If you do not claim confidentiality at the time of submitting the information, the MOECC Ministry may make the information available to the public without further notice to you.

Instructions

This form should be used to notify the Ministry of a measured or modelled air-related exceedance. Notification is required under the Regulation and failure to notify the Ministry constitutes an offence under the Regulation and the EPA.

The publication titled “Air Contaminants Benchmarks (ACB) List: Standards, guidelines and screening levels for assessing point of impingement concentrations of air contaminants” contains two types of benchmarks: Benchmark 1 values (standards and guidelines) and Benchmark 2 values (screening levels). This list is available on the Internet site at https://www.ontario.ca/page/air-contaminants-benchmarks-list-standards-guidelines-and-screening-levels-assessing-point. This form is to be used to notify the Ministry of an exceedance of a Benchmark 1 value. If a concentration of a contaminant exceeds a Benchmark 1 value that is based on a guideline value, it is an indication that discharges of the contaminant may cause an adverse effect. If a concentration of a contaminant exceeds a Benchmark 2 value, it may be an indication that discharges of the contaminant may cause an adverse effect – further assessment should be undertaken to determine if an adverse effect may occur. If so, this form should be used to notify the Ministry.

This form may be used for notification of exceedances of more than one contaminant; Table 1 (or equivalent) should be completed for modelled exceedances. Table 2 should be completed for measured exceedances. If this notification is made pursuant to s. 30 then this form must be submitted immediately.

Note: The Ministry publishes a separate list of Ontario’s Ambient Air Quality Criteria (AAQCs) which can be found on our website http://www.ontario.ca/document/ontarios-ambient-air-quality-criteria-sorted-contaminant-name. AAQCs are intended to address general air quality, not contributions of a contaminant to air quality from a facility. Hence, the notification requirements under the Regulation do not apply to AAQCs.

 © Queen's Printer for Ontario, 2017

Regulatory Authority

Exceedance of a Benchmark 1 Value (Standard or Guideline)

"28. (1) A person who discharges or causes or permits the discharge of a contaminant shall, as soon as practicable, notify a provincial officer in writing if,

(a) the person uses an approved dispersion model to predict concentrations of the contaminant that result from the discharges and,

i. the use of the model indicates that discharges of the contaminant may result in a contravention of section 19 or 20, or

ii. sections 19 and 20 do not apply to discharges of the contaminant and the use of the model indicates that discharges of the contaminant may cause an adverse effect;

(b) measurements of air samples indicate that discharges of the contaminant may result in a contravention of section 19 or 20; or

(c) sections 19 and 20 do not apply to discharges of the contaminant and measurements of air samples indicate that discharges of the contaminant may cause an adverse effect. …"

3. The emission rate that, for the relevant averaging period, is derived from a combination of a method that complies with paragraph 1 or 2 and ambient monitoring, according to a plan approved by the Director as likely to provide an accurate reflection of emissions.

"25. (9) A person who is required under subsection (8) to complete the update of a report not later than March 31 in a year shall, as soon as practicable after that date, notify a provincial officer in writing if the person has started to use an approved dispersion model with respect to a contaminant for the purpose of completing the update but has not yet complied with section 12, and,

(a) the use of the model indicates that discharges of the contaminant may result in a contravention of section 19 or 20; or

(b) sections 19 and 20 do not apply to discharges of the contaminant and the use of the model indicates that discharges of the contaminant may cause an adverse effect. …"

Exceedance of an Upper Risk Threshold

"30. (1) A person who discharges or causes or permits the discharge of a contaminant listed in Schedule 6 into the air shall comply with subsections (3) and (4) if there is reason to believe, based on any relevant information, that discharges of the contaminant may result in,

(a) the concentration of the contaminant exceeding the half hour upper risk threshold set out for that contaminant in Schedule 6 at a point of impingement, if section 19 applies to the person in respect of the contaminant; or

(b) the other time period upper risk threshold set out for that contaminant in Schedule 6 at a point of impingement, if section 20 applies to the person in respect of the contaminant.

(1.1) The two items in Schedule 6 that set out upper risk thresholds for total reduced sulphur (TRS) compounds specify the facilities to which they apply.

(2) Without limiting the generality of subsection (1), the reference in that subsection to relevant information includes relevant information from predictions of a dispersion model, including,

(a) an approved dispersion model or other dispersion model; or

(b) a dispersion model that is not used in accordance with this Regulation.

(3) If subsection (1) applies to a discharge, the person who discharged or caused or permitted the discharge of the contaminant shall immediately notify the Director in writing. …"

Section 1 - Ministry of the Environment and Climate Change District Office Information	
Date Form Submitted (yyyy/mm/dd) 2021/09/13	Date Exceedance Determined (yyyy/mm/dd) 2021/09/09

MOECC District Office	District Office Fax Number
Kenora Area Office	807 456-3584

Supporting information attached? ☑ Yes ☐ No If yes, number of pages 2

Section 2 - Facility and Site Information

Name of Person Making the Notification

Last Name	First Name
Cornell	Garnet

Business Name (the name under which the entity is operating or trading - also referred to as trade name)
New Gold Inc.

Business Number

Business Activity Description (a description of the business endeavour, this may include products sold, services provided, equipment used, etc.)
Gold ore mining

Site Name	MOECC District Office
Rainy River Mine	Kenora Area Office

Primary North American Industry Classification System (NAICS) Code
212220

☐ Section 19 (Schedule 2) applies ☑ Section 20 (Schedule 3) applies

Other NAICS Code

Civic Address

Unit Number	Street Number	Street Name	PO Box
	1361	Roen Road	

Survey Address

Lot and Concession: used to indicate location within a subdivided township and consists of a lot number and a concession number.

Part and Reference: used to indicate location within an unsubdivided township or unsurveyed territory, and consists of a part and a reference plan number indicating the location within that plan. Attach copy of the plan.

Lot	Concession	Part	Reference Plan

Non Address Information (includes any additional information to clarify requestor's physical location)

Municipality/Unorganized Township or Territory Upper Tier/District	Postal Code
Chapple	P0W 1A0

Telephone Number	Fax Number	Mobile Number	Email Address
807 234-8170 ext.		807 276-0106	Garnet.Cornell@newgold.com

Geo Reference

Description of location	Map Datum	Zone	Accuracy Estimate	Geo-Referencing Method	UTM Easting	UTM Northing
Tait Road Monitoring Station	NAD83	15	+/- 10 m	Google Earth	426072	5406996

Environmental Compliance Approval (ECA) Number(s) and/or Environmental Activity and Sector Registry (EASR) Number(s) – attach a separate list if more space is required

1 0412-A2LR4V 2 3
4 5 6

Section 3 - Type of Notification – Table 1 or Table 2 should be completed and submitted with this notification

☑ This is a notification under subsection 28(1) – Notice to Provincial Officer as a result of modelling or measurements (select all that apply)

- ☑ Exceedance of Benchmark 1 Value (Standard)
- ☐ Exceedance of Benchmark 1 Value (Guideline)
- ☐ Exceedance of Benchmark 2 Value (determined discharge may cause adverse effect)
- ☐ Other (explain)

☐ This is a notification under subsection 25(9) – Notice to Provincial Officer as a result an update of an Emission Summary and Dispersion Modelling Report (ESDM) (select all that apply)

- ☐ Exceedance of Benchmark 1 Value (Standard)
- ☐ Exceedance of Benchmark 1 Value (Guideline)
- ☐ Exceedance of Benchmark 2 Value (determined discharge may cause adverse effect)
- ☐ Other (explain)

Date that Refinement (see section 12 of the regulation) is anticipated to be complete (yyyy/mm/dd) _____

☐ This is a notification under subsection 30(3) – Notice to the Director as a result of an exceedance of Upper Risk Threshold (URT) (Schedule 6)

☐ Yes ☐ No

Section 4 - Follow-Up Action

Section 28 Notifications

Will an Abatement Plan be submitted to the Ministry within 30 days of this notice as per s.29?

☐ Yes ☑ No If No, please provide the following

Type of Previously Submitted Abatement Plan	Date Submitted under s.29 of the Regulation (yyyy/mm/dd)

Subsection 30(3) Notifications for URT Exceedance

Has an ESDM Report been prepared in accordance with s.30(4) and submitted to the Ministry?

☐ Yes ☐ No If No, what is the anticipated submission date for the ESDM* (yyyy/mm/dd)?

_____

*Note: ESDM Report must be submitted within three months of the discharge

Section 5 - Model Based Assessment – please complete this section if notifying of a modelled exceedance (complete Table 1)

Was an ESDM Report prepared in accordance with s.26 of the Regulation?

☐ Yes ☑ No

If yes, was the ESDM Report prepared to fulfill (select all that apply)

- ☐ s.22 of the Regulation - Application for ECA under s. 20.2 of the *Environmental Protection Act*
- ☐ s.9 of the EPA – Condition of an ECA (e.g. ECA with Limited Operational Flexibility)
- ☐ s.23 of the Regulation - Requirement for Schedule 4 and 5 sector facilities
- ☐ s.24 of the Regulation - Notice issued by Director
- ☐ s.25 of the Regulation - Requirement for updating ESDM Report
- ☐ s.30(4) of the Regulation – Required as result of URT exceedance
- ☐ s.33(1) of the Regulation – Required as part of a request for a site-specific standard

☐ s.11 (1) of Ontario Regulation 1/17 – Registrations under Part II.2 of the Act – Activities Requiring Assessment of Air Emissions (Air Emissions EASR Regulation)

☐ Other (please specify) _____

What approved dispersion model was used? Include version number (select all that apply)

☐ Appendix to Reg. 346 ☐ AERMOD ☐ ASHRAE ☐ SCREEN 3

☐ Other (please specify) (if other, provide copy of section 7 notice) _____

Was the approved dispersion model refined as required by s.12 of the Regulation (i.e. operating conditions, emission rates)?

☐ Yes ☐ No

What meteorological data was used?

☐ Regional Data ☐ Regional data refined, in consultation with the EMRB, to reflect local land use conditions

☐ Local or Site-Specific Data ☐ Data from a computational method

Did you receive approval under s. 13 for the Meteorological Data? ☐ Yes ☐ No

Have you modelled a concentration at a Point of Impingement (POI) other than the maximum POI? (please include figure showing maximum POI location)

☐ Yes ☐ No

If Yes, specify additional locations (i.e., land use) at which the exceedence may occur (select all that apply – please include figure showing additional modelled locations):

☐ Health Care ☐ Seniors Residence/Long Term Care Facility ☐ Child Care Facility ☐ Educational Facility

☐ Dwelling

☐ Location Specified by the Director (explain) _____

☐ Other Location (explain) _____

Section 6 - Measurement Based Assessment – please complete this section if notifying of a measured **exceedance**

(Complete Table 2 or equivalent)

Type of Monitor / Measurement Type	Date of Exceedance (yyyy/mm/dd)	Duration of Exceedance
PQ200 Sampler	2021/07/15	24-hour

Is the monitoring approved by the Ministry?

☑ Yes ☐ No If yes, please describe the approval MECP approval letter dated November 9, 2016

Monitoring Reference Number: (if available)

Specify the location (i.e., land use) at which the exceedence did occur (select all that apply):

☐ Health Care ☐ Seniors Residence/Long Term Care Facility ☐ Child Care Facility ☐ Educational Facility

☐ Dwelling

☐ Location Specified by the Director (explain) _____

☑ Other Location (explain) Tait Road Monitoring Station

Section 7 - Statement of Company Official

I, the undersigned hereby declare that, to the best of my knowledge:

- The information contained herein and the information submitted is complete and accurate in every way and I am aware of the penalties against providing false information as per s.184 (2) of the *Environmental Protection Act*.
- I have been authorized to act on behalf of the company identified in this form for the purpose of providing this notification of exceedance under the Regulation to the Ministry of the Environment and Climate Change.
- I have used the most recent notification form (as obtained from the Ministry Internet site at http://www.ontario.ca/environment-and-energy/rules-air-quality-and-pollution or from my local Ministry District Office and I have included all necessary information required by the Regulation and identified on this form.

Name of Signing Authority	Title
Garnet Cornell	Environment Superintendent

Telephone Number	Fax Number	Mobile Number	Email Address
807 234-8170 ext.		807 276-0106	Garnet.Cornell@newgold.com

Signature	Date (yyyy/mm/dd)

Address Information

Same as Site Physical Address? ☑ Yes ☐ No (If no, please provide signing authority mailing address information below)

Civic Address

Unit Number	Street Number	Street Name	PO Box
	1361	Roen Road	

Delivery Designator: If signing authority mailing address is a Rural Route, Suburban Service, Mobile Route or General Delivery (i.e., RR#3)

Municipality/Unorganized Township or Territory	County/District	Province/State	Country	Postal Code
Chapple				P0W 1A0

Table 1 - Information About Modelled Exceedance

Contaminant [a]	CAS [b] Number	Air Dispersion Model Used (include version number)	Maximum POI [c] Concentration (µg/m³)	Averaging Period (hours)(minute/ hour/day/ annual)	Ministry Limit (µg/m³) or URT (µg/m³)	Limiting Effect	Schedule 2, Schedule 3, Guideline, Schedule 6 URT or Other (specify) [d]	Benchmark 1, Benchmark 2, or No Benchmark [e] (specify)	Percentage of Ministry Limit or URT

Provide additional information as needed (e.g. Location of Maximum POI Concentrations (e.g. UTM, street address, land use at Maximum POI if known, etc.)

Notes:

(a) Proper Chemical Name should be given (Abbreviations, acronyms, numeric codes, trade names and mixtures NOT ACCEPTABLE).

(b) CAS Number : Chemical Abstracts Services Number (UNIQUE Identifier for a chemical)

(c) POI Concentration : Point of Impingement Concentration

(d) Schedule 2 = section 19 applies; Schedule 3 = section 20 applies

(e) If a B2 value is exceeded, the regulation requires potential adverse effects to be assessed. If it is determined that an adverse effect may occur for the contaminant in question, this should be included in the table

Table 2 - Information About Measured Exceedance

Contaminant [a]	CAS [b] Number	Type of Assessment (Measurement Method)	Maximum POI [c] Concentration (µg/m³)	Averaging Period (minute/ hour/day/ annual)	Ministry Limit (µg/m3) or URT (µg/m³)	Limiting Effect	Schedule 2, Schedule 3, Guideline, Schedule 6 URT, or Other (specify)	Benchmark 1, Benchmark 2, or No Benchmark [d] (specify)	Percentage of Ministry Limit or URT
Particulate matter 2.5	N/A	PQ200	36.52	24-hour	27	Health	CAAQS		135.27%

* For additional measurement locations / sampling times, please include additional tables

** If you are reporting more than one exceedence, include the time of the exceedence in the contaminant column

Notes:

(a) Proper Chemical Name should be given (Abbreviations, acronyms, numeric codes, trade names and mixtures NOT ACCEPTABLE).

(b) CAS Number : Chemical Abstracts Services Number (UNIQUE Identifier for a chemical)

(c) POI Concentration : Point of Impingement Concentration

(d) Schedule 2 = section 19 applies; Schedule 3 = section 20 applies

(e) If a B2 value is exceeded, the regulation requires potential adverse effects to be assessed. If it is determined that an adverse effect may occur for the contaminant in question, this should be included in the table

newgold Rainy River

October 29, 2021

Jason Tittlemier
Senior Environmental Officer
Ministry of Environment, Conservation and Parks; Kenora Area Office
808 Robertson Street
Kenora, ON P9N 1X9

Dear Mr. Tittlemier,

NOTIFICATION OF EXCEEDANCE: PM2.5 EXCEEDANCE OF BENCHMARK 1 VALUE (STANDARD) ON AUGUST 2, 2021 AT THE GALLINGER AND NORTHWEST MONITORING STATIONS

As per the voicemail left on October 27, 2021, please see attached Notification of Exceedance regarding a PM2.5 exceedance of the Standard Benchmark 1 Value on August 2, 2021 at the New Gold Rainy River Mine (RRM) Gallinger and Northwest Monitoring Stations of 150.3% and 137.1%, respectively.

The cause of the exceedance is due to the increased smoke in the area from local wildfires. The third air quality station, Tait Road Monitoring Station, also reported a high sample reading of 53.38 µg/m^3 but was deemed to be an invalid sample due to exceeding the total volume limit. Below I have also attached the E-Sampler readings for the day which show consistently elevated total suspended particulate readings over the 24 hours as well as an Air Quality Advisory for International Falls for August 2, 2021. I have also included the Coarse Ore Stockpile height during those 24 hours.

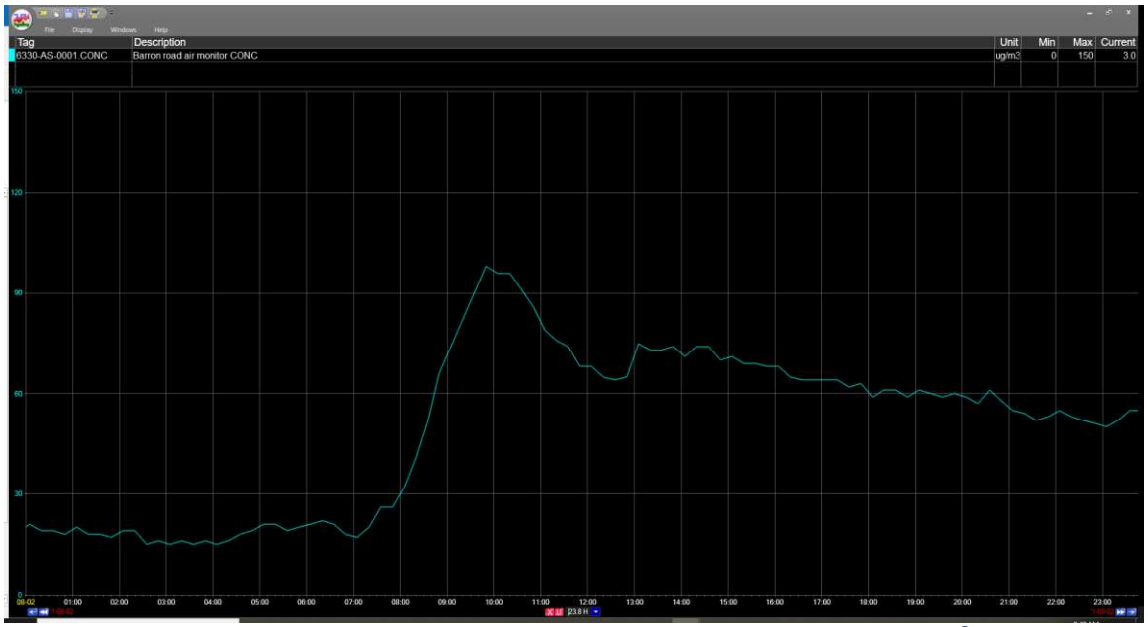

Figure 1 Barron Site E-Sampler readings for July 15, 2021 (ug/m^3)

New Gold Inc., Rainy River Project
5967 Highway 11/71, P.O. Box 5
Emo, ON P0W 1E0

T 807-482-2501
F 807-482-2834 www.newgold.com

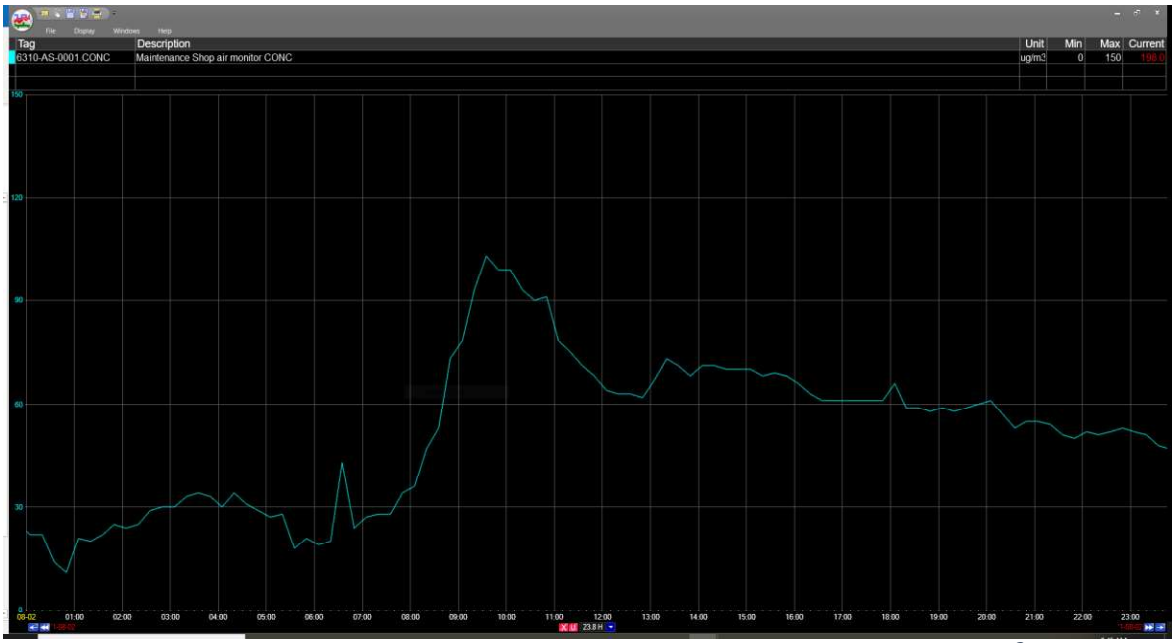

Figure 2 Gallinger Road E-Sampler readings from August 2, 2021 (ug/m^3)

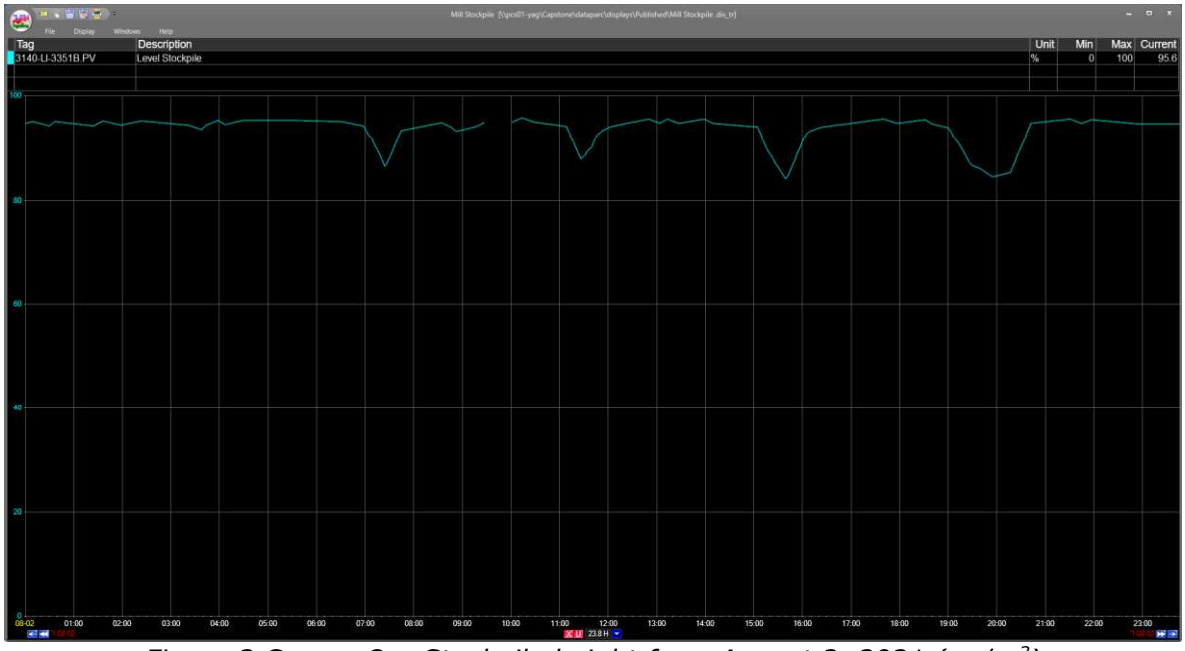

Figure 3 Coarse Ore Stockpile height from August 2, 2021 (µg/m^3)

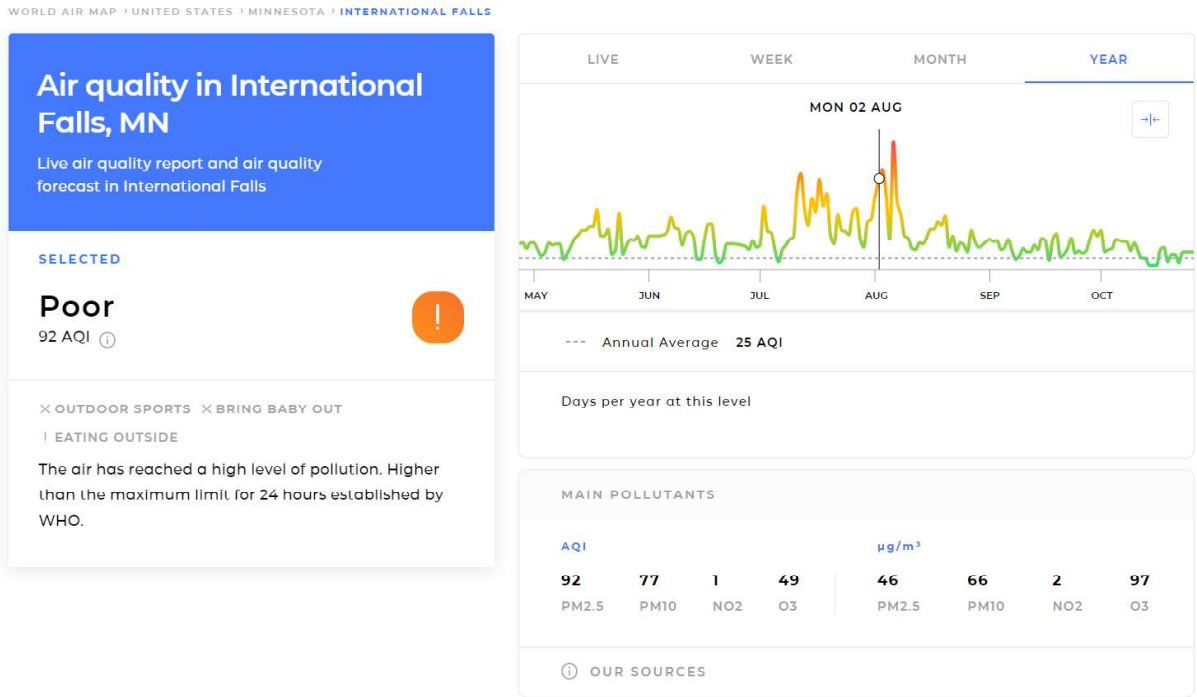

Figure 4 Air Quality advisory for International Falls, MN for August 2, 2021.

Should you have any questions, please do not hesitate to contact the undersigned at: Garnet.Cornell@newgold.com or (807) 276-0106.

Respectfully submitted,

Garnet Cornell
Environment Superintendent

Ontario

Ministry of the Environment and Climate Change

Notification of Exceedance – Local Air Quality Regulation

General Information

Information requested in this notification form is collected under the authority of the *Environmental Protection Act*, R.S.O. 1990 (EPA) and Ontario Regulation 419/05: Air Pollution – Local Air Quality (the Regulation) made under the EPA and will be used to collect information relating to a measured or modelled air-related exceedance as required by s.25(9), s.28(1) and s.30(3) of the Regulation. The Ministry of the Environment and Climate Change (Ministry) may also request additional information.

1. Questions regarding completion and submission of this notification form should be directed to your local Ministry District Office. A list of these District Offices (including fax numbers) is available on the Ministry Internet site at http://www.ontario.ca/environment-and-energy/ministry-environment-and-climate-change-district-locator. A copy of this form may be acquired through the Ministry public web site http://www.ontario.ca/environment-and-energy/rules-air-quality-and-pollution or by contacting any Ministry office.

2. For notification under s.25(9) or s.28(1), the completed notification form should be sent, as soon as practicable, to the local Ministry District Office which has jurisdiction over the area in which the facility is located. A list of these District Offices (including fax numbers) is available on the Ministry Internet site at http://www.ontario.ca/environment-and-energy/ministry-environment-and-climate-change-district-locator.

3. For notification under s.30(3), the completed notification form should be immediately faxed to the local Ministry District Office which has jurisdiction over the area which the facility is located. A list of these District Offices (including fax numbers) is available on the Ministry Internet site at http://www.ontario.ca/environment-and-energy/ministry-environment-and-climate-change-district-locator. If the exceedance is determined outside of the business hours of the District Office then the completed notification form should be faxed to the Spills Action Center (1-800-268-6061).

4. Information on this form may be claimed as confidential but will be subject to the *Freedom of Information and Protection of Privacy Act* (FOIPPA) and the EBR. If you do not claim confidentiality at the time of submitting the information, the MOECC Ministry may make the information available to the public without further notice to you.

Instructions

This form should be used to notify the Ministry of a measured or modelled air-related exceedance. Notification is required under the Regulation and failure to notify the Ministry constitutes an offence under the Regulation and the EPA.

The publication titled “Air Contaminants Benchmarks (ACB) List: Standards, guidelines and screening levels for assessing point of impingement concentrations of air contaminants” contains two types of benchmarks: Benchmark 1 values (standards and guidelines) and Benchmark 2 values (screening levels). This list is available on the Internet site at https://www.ontario.ca/page/air-contaminants-benchmarks-list-standards-guidelines-and-screening-levels-assessing-point. This form is to be used to notify the Ministry of an exceedance of a Benchmark 1 value. If a concentration of a contaminant exceeds a Benchmark 1 value that is based on a guideline value, it is an indication that discharges of the contaminant may cause an adverse effect. If a concentration of a contaminant exceeds a Benchmark 2 value, it may be an indication that discharges of the contaminant may cause an adverse effect – further assessment should be undertaken to determine if an adverse effect may occur. If so, this form should be used to notify the Ministry.

This form may be used for notification of exceedances of more than one contaminant; Table 1 (or equivalent) should be completed for modelled exceedances. Table 2 should be completed for measured exceedances. If this notification is made pursuant to s. 30 then this form must be submitted immediately.

Note: The Ministry publishes a separate list of Ontario’s Ambient Air Quality Criteria (AAQCs) which can be found on our website http://www.ontario.ca/document/ontarios-ambient-air-quality-criteria-sorted-contaminant-name. AAQCs are intended to address general air quality, not contributions of a contaminant to air quality from a facility. Hence, the notification requirements under the Regulation do not apply to AAQCs.

 © Queen's Printer for Ontario, 2017

Regulatory Authority

Exceedance of a Benchmark 1 Value (Standard or Guideline)

"28. (1) A person who discharges or causes or permits the discharge of a contaminant shall, as soon as practicable, notify a provincial officer in writing if,

(a) the person uses an approved dispersion model to predict concentrations of the contaminant that result from the discharges and,

i. the use of the model indicates that discharges of the contaminant may result in a contravention of section 19 or 20, or

ii. sections 19 and 20 do not apply to discharges of the contaminant and the use of the model indicates that discharges of the contaminant may cause an adverse effect;

(b) measurements of air samples indicate that discharges of the contaminant may result in a contravention of section 19 or 20; or

(c) sections 19 and 20 do not apply to discharges of the contaminant and measurements of air samples indicate that discharges of the contaminant may cause an adverse effect. …"

3. The emission rate that, for the relevant averaging period, is derived from a combination of a method that complies with paragraph 1 or 2 and ambient monitoring, according to a plan approved by the Director as likely to provide an accurate reflection of emissions.

"25. (9) A person who is required under subsection (8) to complete the update of a report not later than March 31 in a year shall, as soon as practicable after that date, notify a provincial officer in writing if the person has started to use an approved dispersion model with respect to a contaminant for the purpose of completing the update but has not yet complied with section 12, and,

(a) the use of the model indicates that discharges of the contaminant may result in a contravention of section 19 or 20; or

(b) sections 19 and 20 do not apply to discharges of the contaminant and the use of the model indicates that discharges of the contaminant may cause an adverse effect. …"

Exceedance of an Upper Risk Threshold

"30. (1) A person who discharges or causes or permits the discharge of a contaminant listed in Schedule 6 into the air shall comply with subsections (3) and (4) if there is reason to believe, based on any relevant information, that discharges of the contaminant may result in,

(a) the concentration of the contaminant exceeding the half hour upper risk threshold set out for that contaminant in Schedule 6 at a point of impingement, if section 19 applies to the person in respect of the contaminant; or

(b) the other time period upper risk threshold set out for that contaminant in Schedule 6 at a point of impingement, if section 20 applies to the person in respect of the contaminant.

(1.1) The two items in Schedule 6 that set out upper risk thresholds for total reduced sulphur (TRS) compounds specify the facilities to which they apply.

(2) Without limiting the generality of subsection (1), the reference in that subsection to relevant information includes relevant information from predictions of a dispersion model, including,

(a) an approved dispersion model or other dispersion model; or

(b) a dispersion model that is not used in accordance with this Regulation.

(3) If subsection (1) applies to a discharge, the person who discharged or caused or permitted the discharge of the contaminant shall immediately notify the Director in writing. …"

Section 1 - Ministry of the Environment and Climate Change District Office Information	
Date Form Submitted (yyyy/mm/dd) 2021/10/29	Date Exceedance Determined (yyyy/mm/dd) 2021/10/26

MOECC District Office	District Office Fax Number
Kenora Area Office	807 468-2735

Supporting information attached? ☑ Yes ☐ No If yes, number of pages 2

Section 2 - Facility and Site Information

Name of Person Making the Notification

Last Name	First Name
Cornell	Garnet

Business Name (the name under which the entity is operating or trading - also referred to as trade name)
New Gold Inc.

Business Number

Business Activity Description (a description of the business endeavour, this may include products sold, services provided, equipment used, etc.)
Gold ore mining

Site Name	MOECC District Office
Rainy River Mine	Thunder Bay District Office

Primary North American Industry Classification System (NAICS) Code
212220

☐ Section 19 (Schedule 2) applies ☑ Section 20 (Schedule 3) applies

Other NAICS Code

Civic Address

Unit Number	Street Number	Street Name	PO Box
	1361	Roen Road	

Survey Address

Lot and Concession: used to indicate location within a subdivided township and consists of a lot number and a concession number.

Part and Reference: used to indicate location within an unsubdivided township or unsurveyed territory, and consists of a part and a reference plan number indicating the location within that plan. Attach copy of the plan.

Lot	Concession	Part	Reference Plan

Non Address Information (includes any additional information to clarify requestor's physical location)

Municipality/Unorganized Township or Territory Upper Tier/District	Postal Code
Chapple	P0W 1A0

Telephone Number	Fax Number	Mobile Number	Email Address
807 234-8170 ext.		807 276-0106	Garnet.Cornell@newgold.com

Geo Reference

Description of location	Map Datum	Zone	Accuracy Estimate	Geo-Referencing Method	UTM Easting	UTM Northing
Gallinger Road Station	NAD83	15	+/- 10 m	Google Earth	431133	5410534
Northwest Station (TMA)	NAD83	15	+/- 10 m	Google Earth	419797	5413042

Environmental Compliance Approval (ECA) Number(s) and/or Environmental Activity and Sector Registry (EASR) Number(s) – attach a separate list if more space is required

1 0412-A2LR4V 2 _____ 3 _____

4 _____ 5 _____ 6 _____

Section 3 - Type of Notification – Table 1 or Table 2 should be completed and submitted with this notification

☑ This is a notification under subsection 28(1) – Notice to Provincial Officer as a result of modelling or measurements (select all that apply)

- ☑ Exceedance of Benchmark 1 Value (Standard)
- ☐ Exceedance of Benchmark 1 Value (Guideline)
- ☐ Exceedance of Benchmark 2 Value (determined discharge may cause adverse effect)
- ☐ Other (explain)

☐ This is a notification under subsection 25(9) – Notice to Provincial Officer as a result an update of an Emission Summary and Dispersion Modelling Report (ESDM) (select all that apply)

- ☐ Exceedance of Benchmark 1 Value (Standard)
- ☐ Exceedance of Benchmark 1 Value (Guideline)
- ☐ Exceedance of Benchmark 2 Value (determined discharge may cause adverse effect)
- ☐ Other (explain)

Date that Refinement (see section 12 of the regulation) is anticipated to be complete (yyyy/mm/dd) _____

☐ This is a notification under subsection 30(3) – Notice to the Director as a result of an exceedance of Upper Risk Threshold (URT) (Schedule 6)

☐ Yes ☐ No

Section 4 - Follow-Up Action

Section 28 Notifications

Will an Abatement Plan be submitted to the Ministry within 30 days of this notice as per s.29?

☐ Yes ☑ No If No, please provide the following

Type of Previously Submitted Abatement Plan	Date Submitted under s.29 of the Regulation (yyyy/mm/dd)

Subsection 30(3) Notifications for URT Exceedance

Has an ESDM Report been prepared in accordance with s.30(4) and submitted to the Ministry?

☐ Yes ☐ No If No, what is the anticipated submission date for the ESDM* (yyyy/mm/dd)?

_____

*Note: ESDM Report must be submitted within three months of the discharge

Section 5 - Model Based Assessment – please complete this section if notifying of a modelled exceedance (complete Table 1)

Was an ESDM Report prepared in accordance with s.26 of the Regulation?

☐ Yes ☑ No

If yes, was the ESDM Report prepared to fulfill (select all that apply)

- ☐ s.22 of the Regulation - Application for ECA under s. 20.2 of the *Environmental Protection Act*
- ☐ s.9 of the EPA – Condition of an ECA (e.g. ECA with Limited Operational Flexibility)
- ☐ s.23 of the Regulation - Requirement for Schedule 4 and 5 sector facilities
- ☐ s.24 of the Regulation - Notice issued by Director
- ☐ s.25 of the Regulation - Requirement for updating ESDM Report
- ☐ s.30(4) of the Regulation – Required as result of URT exceedance
- ☐ s.33(1) of the Regulation – Required as part of a request for a site-specific standard

☐ s.11 (1) of Ontario Regulation 1/17 – Registrations under Part II.2 of the Act – Activities Requiring Assessment of Air Emissions (Air Emissions EASR Regulation)

☐ Other (please specify) _____

What approved dispersion model was used? Include version number (select all that apply)

☐ Appendix to Reg. 346 ☐ AERMOD ☐ ASHRAE ☐ SCREEN 3

☐ Other (please specify) (if other, provide copy of section 7 notice) _____

Was the approved dispersion model refined as required by s.12 of the Regulation (i.e. operating conditions, emission rates)?

☐ Yes ☐ No

What meteorological data was used?

☐ Regional Data ☐ Regional data refined, in consultation with the EMRB, to reflect local land use conditions

☐ Local or Site-Specific Data ☐ Data from a computational method

Did you receive approval under s. 13 for the Meteorological Data? ☐ Yes ☐ No

Have you modelled a concentration at a Point of Impingement (POI) other than the maximum POI? (please include figure showing maximum POI location)

☐ Yes ☐ No

If Yes, specify additional locations (i.e., land use) at which the exceedence may occur (select all that apply – please include figure showing additional modelled locations):

☐ Health Care ☐ Seniors Residence/Long Term Care Facility ☐ Child Care Facility ☐ Educational Facility

☐ Dwelling

☐ Location Specified by the Director (explain) _____

☐ Other Location (explain) _____

Section 6 - Measurement Based Assessment – please complete this section if notifying of a measured **exceedance**

(Complete Table 2 or equivalent)

Type of Monitor / Measurement Type	Date of Exceedance (yyyy/mm/dd)	Duration of Exceedance
PQ200 Sampler	2021/08/02	24-hour

Is the monitoring approved by the Ministry?

☑ Yes ☐ No If yes, please describe the approval MECP approval letter dated November 9, 2016

Monitoring Reference Number: (if available)

Specify the location (i.e., land use) at which the exceedence did occur (select all that apply):

☐ Health Care ☐ Seniors Residence/Long Term Care Facility ☐ Child Care Facility ☐ Educational Facility

☐ Dwelling

☐ Location Specified by the Director (explain) _____

☑ Other Location (explain) Gallinger Road Monitoring Station and Northwest Monitoring Station

Section 7 - Statement of Company Official

I, the undersigned hereby declare that, to the best of my knowledge:

- The information contained herein and the information submitted is complete and accurate in every way and I am aware of the penalties against providing false information as per s.184 (2) of the *Environmental Protection Act*.
- I have been authorized to act on behalf of the company identified in this form for the purpose of providing this notification of exceedance under the Regulation to the Ministry of the Environment and Climate Change.
- I have used the most recent notification form (as obtained from the Ministry Internet site at http://www.ontario.ca/environment-and-energy/rules-air-quality-and-pollution or from my local Ministry District Office and I have included all necessary information required by the Regulation and identified on this form.

Name of Signing Authority	Title
Garnet Cornell	Environment Superintendent

Telephone Number	Fax Number	Mobile Number	Email Address
807 234-8170 ext.		807 276-0106	Garnet.Cornell@newgold.com

Signature	Date (yyyy/mm/dd)

Address Information

Same as Site Physical Address? ☑ Yes ☐ No (If no, please provide signing authority mailing address information below)

Civic Address

Unit Number	Street Number	Street Name	PO Box
	1361	Roen Road	

Delivery Designator: If signing authority mailing address is a Rural Route, Suburban Service, Mobile Route or General Delivery (i.e., RR#3)

Municipality/Unorganized Township or Territory	County/District	Province/State	Country	Postal Code
Chapple				P0W 1A0

Table 1 - Information About Modelled Exceedance

Contaminant [a]	CAS [b] Number	Air Dispersion Model Used (include version number)	Maximum POI [c] Concentration (µg/m³)	Averaging Period (hours)(minute/ hour/day/ annual)	Ministry Limit (µg/m³) or URT (µg/m³)	Limiting Effect	Schedule 2, Schedule 3, Guideline, Schedule 6 URT or Other (specify) [d]	Benchmark 1, Benchmark 2, or No Benchmark [e] (specify)	Percentage of Ministry Limit or URT

Provide additional information as needed (e.g. Location of Maximum POI Concentrations (e.g. UTM, street address, land use at Maximum POI if known, etc.)

Notes:

(a) Proper Chemical Name should be given (Abbreviations, acronyms, numeric codes, trade names and mixtures NOT ACCEPTABLE).

(b) CAS Number : Chemical Abstracts Services Number (UNIQUE Identifier for a chemical)

(c) POI Concentration : Point of Impingement Concentration

(d) Schedule 2 = section 19 applies; Schedule 3 = section 20 applies

(e) If a B2 value is exceeded, the regulation requires potential adverse effects to be assessed. If it is determined that an adverse effect may occur for the contaminant in question, this should be included in the table

Table 2 - Information About Measured Exceedance

Contaminant [a]	CAS [b] Number	Type of Assessment (Measurement Method)	Maximum POI [c] Concentration (µg/m³)	Averaging Period (minute/ hour/day/ annual)	Ministry Limit (µg/m3) or URT (µg/m³)	Limiting Effect	Schedule 2, Schedule 3, Guideline, Schedule 6 URT, or Other (specify)	Benchmark 1, Benchmark 2, or No Benchmark [d] (specify)	Percentage of Ministry Limit or URT
Particulate matter 2.5	N/A	PQ200 (Gal)	40.57	24-hour	27	Health	CAAQS		150.3%
Particulate matter 2.5	N/A	PQ200 (NW)	37.01	24-hour	27	Health	CAAQS		137.1%

* For additional measurement locations / sampling times, please include additional tables

** If you are reporting more than one exceedence, include the time of the exceedence in the contaminant column

Notes:

(a) Proper Chemical Name should be given (Abbreviations, acronyms, numeric codes, trade names and mixtures NOT ACCEPTABLE).

(b) CAS Number : Chemical Abstracts Services Number (UNIQUE Identifier for a chemical)

(c) POI Concentration : Point of Impingement Concentration

(d) Schedule 2 = section 19 applies; Schedule 3 = section 20 applies

(e) If a B2 value is exceeded, the regulation requires potential adverse effects to be assessed. If it is determined that an adverse effect may occur for the contaminant in question, this should be included in the table

APPENDIX C:
LABORATORY RESULTS

[redacted]

New Gold Inc. Rainy River Project
ATTN: Sarah Flesher
5967 Highway 11/71
P.O. Box 5
Emo ON P0W 1E0

Date Received: 05-AUG-21
Report Date: 01-SEP-21 07:58 (MT)
Version: FINAL

Client Phone: 807-234-8200

Certificate of Analysis

Lab Work Order #: L2623313
Project P.O. #: 4500050093
Job Reference: NEW GOLD RRP
C of C Numbers:
Legal Site Desc:

[redacted]

[This report shall not be reproduced except in full without the written authority of the Laboratory.]

ADDRESS: 1435 Norjohn Court, Unit 1, Burlington, ON, L7L 0E6 Canada | Phone: +1 905 331 3111 | Fax: +1 905 331 4567

[redacted]

ALS ENVIRONMENTAL ANALYTICAL REPORT

Sample Details/Parameters	Result	Qualifier*	D.L.	Units	Extracted	Analyzed	Batch
L2623313-1 SOUTH-TSP-372							
Sampled By: Client on 09-JUL-21							
Matrix: Hi Vol Filter							
Miscellaneous Parameters							
Total particulate	51000		2300	ug		12-AUG-21	R5556305
Metals on High Volume Filter by ICPMS							
Arsenic (As)	<3.0		3.0	ug	20-AUG-21	20-AUG-21	R5566876
Cadmium (Cd)	<2.0		2.0	ug	20-AUG-21	20-AUG-21	R5566876
Cobalt (Co)	<2.0		2.0	ug	20-AUG-21	20-AUG-21	R5566876
Chromium (Cr)	<5.0		5.0	ug	20-AUG-21	20-AUG-21	R5566876
Copper (Cu)	82.4		4.0	ug	20-AUG-21	20-AUG-21	R5566876
Iron (Fe)	738		20	ug	20-AUG-21	20-AUG-21	R5566876
Manganese (Mn)	23.4		1.0	ug	20-AUG-21	20-AUG-21	R5566876
Nickel (Ni)	<3.0		3.0	ug	20-AUG-21	20-AUG-21	R5566876
Lead (Pb)	<3.0		3.0	ug	20-AUG-21	20-AUG-21	R5566876
Selenium (Se)	<10		10	ug	20-AUG-21	20-AUG-21	R5566876
Vanadium (V)	<5.0		5.0	ug	20-AUG-21	20-AUG-21	R5566876
Zinc (Zn)	16.2		5.0	ug	20-AUG-21	20-AUG-21	R5566876
L2623313-2 SOUTH-TSP-373							
Sampled By: Client on 15-JUL-21							
Matrix: Hi Vol Filter							
Miscellaneous Parameters							
Total particulate	157000		2300	ug		12-AUG-21	R5556305
Metals on High Volume Filter by ICPMS							
Arsenic (As)	<3.0		3.0	ug	20-AUG-21	20-AUG-21	R5566876
Cadmium (Cd)	<2.0		2.0	ug	20-AUG-21	20-AUG-21	R5566876
Cobalt (Co)	<2.0		2.0	ug	20-AUG-21	20-AUG-21	R5566876
Chromium (Cr)	6.1		5.0	ug	20-AUG-21	20-AUG-21	R5566876
Copper (Cu)	96.3		4.0	ug	20-AUG-21	20-AUG-21	R5566876
Iron (Fe)	2100		20	ug	20-AUG-21	20-AUG-21	R5566876
Manganese (Mn)	78.8		1.0	ug	20-AUG-21	20-AUG-21	R5566876
Nickel (Ni)	3.3		3.0	ug	20-AUG-21	20-AUG-21	R5566876
Lead (Pb)	13.7		3.0	ug	20-AUG-21	20-AUG-21	R5566876
Selenium (Se)	<10		10	ug	20-AUG-21	20-AUG-21	R5566876
Vanadium (V)	<5.0		5.0	ug	20-AUG-21	20-AUG-21	R5566876
Zinc (Zn)	64.8		5.0	ug	20-AUG-21	20-AUG-21	R5566876
L2623313-3 SOUTH-TSP-374							
Sampled By: Client on 21-JUL-21							
Matrix: Hi Vol Filter							
Miscellaneous Parameters							
Total particulate	44500		2300	ug		12-AUG-21	R5556305
Metals on High Volume Filter by ICPMS							
Arsenic (As)	<3.0		3.0	ug	20-AUG-21	20-AUG-21	R5566876
Cadmium (Cd)	<2.0		2.0	ug	20-AUG-21	20-AUG-21	R5566876
Cobalt (Co)	<2.0		2.0	ug	20-AUG-21	20-AUG-21	R5566876
Chromium (Cr)	<5.0		5.0	ug	20-AUG-21	20-AUG-21	R5566876
Copper (Cu)	46.4		4.0	ug	20-AUG-21	20-AUG-21	R5566876
Iron (Fe)	558		20	ug	20-AUG-21	20-AUG-21	R5566876
Manganese (Mn)	16.9		1.0	ug	20-AUG-21	20-AUG-21	R5566876
Nickel (Ni)	<3.0		3.0	ug	20-AUG-21	20-AUG-21	R5566876
Lead (Pb)	<3.0		3.0	ug	20-AUG-21	20-AUG-21	R5566876
Selenium (Se)	<10		10	ug	20-AUG-21	20-AUG-21	R5566876
Vanadium (V)	<5.0		5.0	ug	20-AUG-21	20-AUG-21	R5566876
Zinc (Zn)	13.1		5.0	ug	20-AUG-21	20-AUG-21	R5566876

* Refer to Referenced Information for Qualifiers (if any) and Methodology.

ALS ENVIRONMENTAL ANALYTICAL REPORT

Sample Details/Parameters	Result	Qualifier*	D.L.	Units	Extracted	Analyzed	Batch
L2623313-4 SOUTH-TSP-375							
Sampled By: Client on 27-JUL-21							
Matrix: Hi Vol Filter							
Miscellaneous Parameters							
Total particulate	64400		2300	ug		12-AUG-21	R5556305
Metals on High Volume Filter by ICPMS							
Arsenic (As)	<3.0		3.0	ug	20-AUG-21	20-AUG-21	R5566876
Cadmium (Cd)	<2.0		2.0	ug	20-AUG-21	20-AUG-21	R5566876
Cobalt (Co)	<2.0		2.0	ug	20-AUG-21	20-AUG-21	R5566876
Chromium (Cr)	<5.0		5.0	ug	20-AUG-21	20-AUG-21	R5566876
Copper (Cu)	102		4.0	ug	20-AUG-21	20-AUG-21	R5566876
Iron (Fe)	567		20	ug	20-AUG-21	20-AUG-21	R5566876
Manganese (Mn)	32.3		1.0	ug	20-AUG-21	20-AUG-21	R5566876
Nickel (Ni)	<3.0		3.0	ug	20-AUG-21	20-AUG-21	R5566876
Lead (Pb)	<3.0		3.0	ug	20-AUG-21	20-AUG-21	R5566876
Selenium (Se)	<10		10	ug	20-AUG-21	20-AUG-21	R5566876
Vanadium (V)	<5.0		5.0	ug	20-AUG-21	20-AUG-21	R5566876
Zinc (Zn)	25.5		5.0	ug	20-AUG-21	20-AUG-21	R5566876
L2623313-5 NORTH-TSP-372							
Sampled By: Client on 09-JUL-21							
Matrix: Hi Vol Filter							
Miscellaneous Parameters							
Total particulate	153000		2300	ug		12-AUG-21	R5556305
Metals on High Volume Filter by ICPMS							
Arsenic (As)	<3.0		3.0	ug	20-AUG-21	20-AUG-21	R5566876
Cadmium (Cd)	<2.0		2.0	ug	20-AUG-21	20-AUG-21	R5566876
Cobalt (Co)	<2.0		2.0	ug	20-AUG-21	20-AUG-21	R5566876
Chromium (Cr)	8.0		5.0	ug	20-AUG-21	20-AUG-21	R5566876
Copper (Cu)	209		4.0	ug	20-AUG-21	20-AUG-21	R5566876
Iron (Fe)	3540		20	ug	20-AUG-21	20-AUG-21	R5566876
Manganese (Mn)	97.2		1.0	ug	20-AUG-21	20-AUG-21	R5566876
Nickel (Ni)	4.8		3.0	ug	20-AUG-21	20-AUG-21	R5566876
Lead (Pb)	3.3		3.0	ug	20-AUG-21	20-AUG-21	R5566876
Selenium (Se)	<10		10	ug	20-AUG-21	20-AUG-21	R5566876
Vanadium (V)	6.1		5.0	ug	20-AUG-21	20-AUG-21	R5566876
Zinc (Zn)	28.4		5.0	ug	20-AUG-21	20-AUG-21	R5566876
L2623313-6 NORTH-TSP-373							
Sampled By: Client on 15-JUL-21							
Matrix: Hi Vol Filter							
Miscellaneous Parameters							
Total particulate	172000		2300	ug		12-AUG-21	R5556305
Metals on High Volume Filter by ICPMS							
Arsenic (As)	<3.0		3.0	ug	20-AUG-21	20-AUG-21	R5566876
Cadmium (Cd)	<2.0		2.0	ug	20-AUG-21	20-AUG-21	R5566876
Cobalt (Co)	<2.0		2.0	ug	20-AUG-21	20-AUG-21	R5566876
Chromium (Cr)	7.2		5.0	ug	20-AUG-21	20-AUG-21	R5566876
Copper (Cu)	172		4.0	ug	20-AUG-21	20-AUG-21	R5566876
Iron (Fe)	2990		20	ug	20-AUG-21	20-AUG-21	R5566876
Manganese (Mn)	80.6		1.0	ug	20-AUG-21	20-AUG-21	R5566876
Nickel (Ni)	4.2		3.0	ug	20-AUG-21	20-AUG-21	R5566876
Lead (Pb)	<3.0		3.0	ug	20-AUG-21	20-AUG-21	R5566876
Selenium (Se)	<10		10	ug	20-AUG-21	20-AUG-21	R5566876
Vanadium (V)	5.4		5.0	ug	20-AUG-21	20-AUG-21	R5566876
Zinc (Zn)	32.9		5.0	ug	20-AUG-21	20-AUG-21	R5566876

* Refer to Referenced Information for Qualifiers (if any) and Methodology.

ALS ENVIRONMENTAL ANALYTICAL REPORT

Sample Details/Parameters	Result	Qualifier*	D.L.	Units	Extracted	Analyzed	Batch
L2623313-7 NORTH-TSP-374							
Sampled By: Client on 21-JUL-21							
Matrix: Hi Vol Filter							
Miscellaneous Parameters							
Total particulate	69800		2300	ug		12-AUG-21	R5556305
Metals on High Volume Filter by ICPMS							
Arsenic (As)	<3.0		3.0	ug	20-AUG-21	20-AUG-21	R5566876
Cadmium (Cd)	<2.0		2.0	ug	20-AUG-21	20-AUG-21	R5566876
Cobalt (Co)	<2.0		2.0	ug	20-AUG-21	20-AUG-21	R5566876
Chromium (Cr)	<5.0		5.0	ug	20-AUG-21	20-AUG-21	R5566876
Copper (Cu)	151		4.0	ug	20-AUG-21	20-AUG-21	R5566876
Iron (Fe)	1330		20	ug	20-AUG-21	20-AUG-21	R5566876
Manganese (Mn)	33.6		1.0	ug	20-AUG-21	20-AUG-21	R5566876
Nickel (Ni)	<3.0		3.0	ug	20-AUG-21	20-AUG-21	R5566876
Lead (Pb)	<3.0		3.0	ug	20-AUG-21	20-AUG-21	R5566876
Selenium (Se)	<10		10	ug	20-AUG-21	20-AUG-21	R5566876
Vanadium (V)	<5.0		5.0	ug	20-AUG-21	20-AUG-21	R5566876
Zinc (Zn)	15.3		5.0	ug	20-AUG-21	20-AUG-21	R5566876
L2623313-8 NORTH-TSP-375							
Sampled By: Client on 27-JUL-21							
Matrix: Hi Vol Filter							
Miscellaneous Parameters							
Total particulate	68800		2300	ug		12-AUG-21	R5556305
Metals on High Volume Filter by ICPMS							
Arsenic (As)	<3.0		3.0	ug	20-AUG-21	20-AUG-21	R5566876
Cadmium (Cd)	<2.0		2.0	ug	20-AUG-21	20-AUG-21	R5566876
Cobalt (Co)	<2.0		2.0	ug	20-AUG-21	20-AUG-21	R5566876
Chromium (Cr)	<5.0		5.0	ug	20-AUG-21	20-AUG-21	R5566876
Copper (Cu)	205		4.0	ug	20-AUG-21	20-AUG-21	R5566876
Iron (Fe)	698		20	ug	20-AUG-21	20-AUG-21	R5566876
Manganese (Mn)	28.6		1.0	ug	20-AUG-21	20-AUG-21	R5566876
Nickel (Ni)	<3.0		3.0	ug	20-AUG-21	20-AUG-21	R5566876
Lead (Pb)	<3.0		3.0	ug	20-AUG-21	20-AUG-21	R5566876
Selenium (Se)	<10		10	ug	20-AUG-21	20-AUG-21	R5566876
Vanadium (V)	<5.0		5.0	ug	20-AUG-21	20-AUG-21	R5566876
Zinc (Zn)	23.4		5.0	ug	20-AUG-21	20-AUG-21	R5566876
L2623313-9 NORTHWEST-TSP-372							
Sampled By: Client on 09-JUL-21							
Matrix: Hi Vol Filter							
Miscellaneous Parameters							
Total particulate	30700		2300	ug		12-AUG-21	R5556305
Metals on High Volume Filter by ICPMS							
Arsenic (As)	<3.0		3.0	ug	20-AUG-21	20-AUG-21	R5566876
Cadmium (Cd)	<2.0		2.0	ug	20-AUG-21	20-AUG-21	R5566876
Cobalt (Co)	<2.0		2.0	ug	20-AUG-21	20-AUG-21	R5566876
Chromium (Cr)	<5.0		5.0	ug	20-AUG-21	20-AUG-21	R5566876
Copper (Cu)	244		4.0	ug	20-AUG-21	20-AUG-21	R5566876
Iron (Fe)	513		20	ug	20-AUG-21	20-AUG-21	R5566876
Manganese (Mn)	15.9		1.0	ug	20-AUG-21	20-AUG-21	R5566876
Nickel (Ni)	<3.0		3.0	ug	20-AUG-21	20-AUG-21	R5566876
Lead (Pb)	<3.0		3.0	ug	20-AUG-21	20-AUG-21	R5566876
Selenium (Se)	<10		10	ug	20-AUG-21	20-AUG-21	R5566876
Vanadium (V)	<5.0		5.0	ug	20-AUG-21	20-AUG-21	R5566876
Zinc (Zn)	10.4		5.0	ug	20-AUG-21	20-AUG-21	R5566876

* Refer to Referenced Information for Qualifiers (if any) and Methodology.

ALS ENVIRONMENTAL ANALYTICAL REPORT

Sample Details/Parameters	Result	Qualifier*	D.L.	Units	Extracted	Analyzed	Batch
L2623313-10 NORTHWEST-TSP-373							
Sampled By: Client on 15-JUL-21							
Matrix: Hi Vol Filter							
Miscellaneous Parameters							
Total particulate	75600		2300	ug		12-AUG-21	R5556305
Metals on High Volume Filter by ICPMS							
Arsenic (As)	<3.0		3.0	ug	20-AUG-21	20-AUG-21	R5566876
Cadmium (Cd)	<2.0		2.0	ug	20-AUG-21	20-AUG-21	R5566876
Cobalt (Co)	<2.0		2.0	ug	20-AUG-21	20-AUG-21	R5566876
Chromium (Cr)	<5.0		5.0	ug	20-AUG-21	20-AUG-21	R5566876
Copper (Cu)	242		4.0	ug	20-AUG-21	20-AUG-21	R5566876
Iron (Fe)	376		20	ug	20-AUG-21	20-AUG-21	R5566876
Manganese (Mn)	16.9		1.0	ug	20-AUG-21	20-AUG-21	R5566876
Nickel (Ni)	<3.0		3.0	ug	20-AUG-21	20-AUG-21	R5566876
Lead (Pb)	<3.0		3.0	ug	20-AUG-21	20-AUG-21	R5566876
Selenium (Se)	<10		10	ug	20-AUG-21	20-AUG-21	R5566876
Vanadium (V)	<5.0		5.0	ug	20-AUG-21	20-AUG-21	R5566876
Zinc (Zn)	18.2		5.0	ug	20-AUG-21	20-AUG-21	R5566876
L2623313-11 NORTHWEST-TSP-374							
Sampled By: Client on 21-JUL-21							
Matrix: Hi Vol Filter							
Miscellaneous Parameters							
Total particulate	102000		2300	ug		12-AUG-21	R5556305
Metals on High Volume Filter by ICPMS							
Arsenic (As)	<3.0		3.0	ug	20-AUG-21	20-AUG-21	R5566876
Cadmium (Cd)	<2.0		2.0	ug	20-AUG-21	20-AUG-21	R5566876
Cobalt (Co)	<2.0		2.0	ug	20-AUG-21	20-AUG-21	R5566876
Chromium (Cr)	<5.0		5.0	ug	20-AUG-21	20-AUG-21	R5566876
Copper (Cu)	137		4.0	ug	20-AUG-21	20-AUG-21	R5566876
Iron (Fe)	2510		20	ug	20-AUG-21	20-AUG-21	R5566876
Manganese (Mn)	72.0		1.0	ug	20-AUG-21	20-AUG-21	R5566876
Nickel (Ni)	<3.0		3.0	ug	20-AUG-21	20-AUG-21	R5566876
Lead (Pb)	<3.0		3.0	ug	20-AUG-21	20-AUG-21	R5566876
Selenium (Se)	<10		10	ug	20-AUG-21	20-AUG-21	R5566876
Vanadium (V)	5.5		5.0	ug	20-AUG-21	20-AUG-21	R5566876
Zinc (Zn)	35.5		5.0	ug	20-AUG-21	20-AUG-21	R5566876
L2623313-12 NORTHWEST-TSP-375							
Sampled By: Client on 27-JUL-21							
Matrix: Hi Vol Filter							
Miscellaneous Parameters							
Total particulate	118000		2300	ug		12-AUG-21	R5556305
Metals on High Volume Filter by ICPMS							
Arsenic (As)	<3.0		3.0	ug	20-AUG-21	20-AUG-21	R5566876
Cadmium (Cd)	<2.0		2.0	ug	20-AUG-21	20-AUG-21	R5566876
Cobalt (Co)	<2.0		2.0	ug	20-AUG-21	20-AUG-21	R5566876
Chromium (Cr)	<5.0		5.0	ug	20-AUG-21	20-AUG-21	R5566876
Copper (Cu)	216		4.0	ug	20-AUG-21	20-AUG-21	R5566876
Iron (Fe)	2220		20	ug	20-AUG-21	20-AUG-21	R5566876
Manganese (Mn)	71.6		1.0	ug	20-AUG-21	20-AUG-21	R5566876
Nickel (Ni)	<3.0		3.0	ug	20-AUG-21	20-AUG-21	R5566876
Lead (Pb)	5.4		3.0	ug	20-AUG-21	20-AUG-21	R5566876
Selenium (Se)	<10		10	ug	20-AUG-21	20-AUG-21	R5566876
Vanadium (V)	5.5		5.0	ug	20-AUG-21	20-AUG-21	R5566876
Zinc (Zn)	39.0		5.0	ug	20-AUG-21	20-AUG-21	R5566876

* Refer to Referenced Information for Qualifiers (if any) and Methodology.

ALS ENVIRONMENTAL ANALYTICAL REPORT

Sample Details/Parameters	Result	Qualifier*	D.L.	Units	Extracted	Analyzed	Batch
L2623313-13 TSP-TRAVEL BLANK							
Sampled By: Client on 30-JUL-21							
Matrix: Hi Vol Filter							
Miscellaneous Parameters							
Total particulate	3000		2300	ug		12-AUG-21	R5556305
Metals on High Volume Filter by ICPMS							
Arsenic (As)	<3.0		3.0	ug	20-AUG-21	20-AUG-21	R5566876
Cadmium (Cd)	<2.0		2.0	ug	20-AUG-21	20-AUG-21	R5566876
Cobalt (Co)	<2.0		2.0	ug	20-AUG-21	20-AUG-21	R5566876
Chromium (Cr)	<5.0		5.0	ug	20-AUG-21	20-AUG-21	R5566876
Copper (Cu)	<4.0		4.0	ug	20-AUG-21	20-AUG-21	R5566876
Iron (Fe)	21		20	ug	20-AUG-21	20-AUG-21	R5566876
Manganese (Mn)	<1.0		1.0	ug	20-AUG-21	20-AUG-21	R5566876
Nickel (Ni)	<3.0		3.0	ug	20-AUG-21	20-AUG-21	R5566876
Lead (Pb)	<3.0		3.0	ug	20-AUG-21	20-AUG-21	R5566876
Selenium (Se)	<10		10	ug	20-AUG-21	20-AUG-21	R5566876
Vanadium (V)	<5.0		5.0	ug	20-AUG-21	20-AUG-21	R5566876
Zinc (Zn)	<5.0		5.0	ug	20-AUG-21	20-AUG-21	R5566876
L2623313-14 SOUTH-PM2.5-372							
Sampled By: Client on 09-JUL-21							
Matrix: 47mm Filter							
Miscellaneous Parameters							
Total particulate	43		15	ug		25-AUG-21	R5569989
L2623313-15 SOUTH-PM2.5-373							
Sampled By: Client on 15-JUL-21							
Matrix: 47mm Filter							
Miscellaneous Parameters							
Total particulate	878		15	ug		25-AUG-21	R5569989
L2623313-16 SOUTH-PM2.5-374							
Sampled By: Client on 21-JUL-21							
Matrix: 47mm Filter							
Miscellaneous Parameters							
Total particulate	255		15	ug		25-AUG-21	R5569989
L2623313-17 SOUTH-PM2.5-375							
Sampled By: Client on 27-JUL-21							
Matrix: 47mm Filter							
Miscellaneous Parameters							
Total particulate	392		15	ug		25-AUG-21	R5569989
L2623313-18 NORTH-PM2.5-372							
Sampled By: Client on 09-JUL-21							
Matrix: 47mm Filter							
Miscellaneous Parameters							
Total particulate	198		15	ug		25-AUG-21	R5569989
L2623313-19 NORTH-PM2.5-373							
Sampled By: Client on 15-JUL-21							
Matrix: 47mm Filter							
Miscellaneous Parameters							
Total particulate	629		15	ug		25-AUG-21	R5569989
L2623313-20 NORTH-PM2.5-374							
Sampled By: Client on 21-JUL-21							
Matrix: 47mm Filter							
Miscellaneous Parameters							

* Refer to Referenced Information for Qualifiers (if any) and Methodology.

ALS ENVIRONMENTAL ANALYTICAL REPORT

Sample Details/Parameters	Result	Qualifier*	D.L.	Units	Extracted	Analyzed	Batch
L2623313-20 NORTH-PM2.5-374							
Sampled By: Client on 21-JUL-21							
Matrix: 47mm Filter							
Total particulate	214		15	ug		25-AUG-21	R5569989
L2623313-21 NORTH-PM2.5-375							
Sampled By: Client on 27-JUL-21							
Matrix: 47mm Filter							
Miscellaneous Parameters							
Total particulate	227		15	ug		25-AUG-21	R5569989
L2623313-22 NORTHWEST-PM2.5-372							
Sampled By: Client on 09-JUL-21							
Matrix: 47mm Filter							
Miscellaneous Parameters							
Total particulate	25		15	ug		25-AUG-21	R5569989
L2623313-23 NORTHWEST-PM2.5-373							
Sampled By: Client on 15-JUL-21							
Matrix: 47mm Filter							
Miscellaneous Parameters							
Total particulate	642		15	ug		25-AUG-21	R5569989
L2623313-24 NORTHWEST-PM2.5-374							
Sampled By: Client on 21-JUL-21							
Matrix: 47mm Filter							
Miscellaneous Parameters							
Total particulate	292		15	ug		25-AUG-21	R5569989
L2623313-25 NORTHWEST-PM2.5-375							
Sampled By: Client on 27-JUL-21							
Matrix: 47mm Filter							
Miscellaneous Parameters							
Total particulate	310		15	ug		25-AUG-21	R5569989
L2623313-26 PM2.5-TRAVEL BLANK							
Sampled By: Client on 30-JUL-21							
Matrix: 47mm Filter							
Miscellaneous Parameters							
Total particulate	<15		15	ug		25-AUG-21	R5569989
L2623313-27 NOP1-DUSTFALL-7							
Sampled By: Client on 29-JUL-21							
Matrix: Dustfall							
Dustfalls-Total, Soluble, Insoluble +FV							
Total Dustfall	11.6		0.10	mg/dm2.day		26-AUG-21	R5572363
Total Insoluble Dustfall	8.34		0.10	mg/dm2.day		26-AUG-21	R5572363
Total Soluble Dustfall	3.30		0.10	mg/dm2.day		26-AUG-21	R5572363
Fixed Dustfall	8.69		0.10	mg/dm2.day		26-AUG-21	R5572363
Fixed Insoluble Dustfall	7.76		0.10	mg/dm2.day		26-AUG-21	R5572363
Fixed Soluble Dustfall	0.93		0.10	mg/dm2.day		26-AUG-21	R5572363
Volatile Dustfall	2.95		0.10	mg/dm2.day		26-AUG-21	R5572363
Volatile Insoluble Dustfall	0.58		0.10	mg/dm2.day		26-AUG-21	R5572363
Volatile Soluble Dustfall	2.37		0.10	mg/dm2.day		26-AUG-21	R5572363
Total Metals in Dustfalls by ICPMS							
Aluminum (Al)-Total	0.0364		0.000054	mg/dm2.day	26-AUG-21	27-AUG-21	R5571388
Interval			1	days		26-AUG-21	R5570588
Interval			1	days		30-AUG-21	R5572273

* Refer to Referenced Information for Qualifiers (if any) and Methodology.

ALS ENVIRONMENTAL ANALYTICAL REPORT

Sample Details/Parameters	Result	Qualifier*	D.L.	Units	Extracted	Analyzed	Batch
L2623313-27 NOP1-DUSTFALL-7							
Sampled By: Client on 29-JUL-21							
Matrix: Dustfall							
Total Metals in Dustfalls by ICPMS							
Antimony (Sb)-Total	0.0000078		0.0000018	mg/dm2.day	26-AUG-21	27-AUG-21	R5571388
Arsenic (As)-Total	0.0000255		0.0000018	mg/dm2.day	30-AUG-21	31-AUG-21	R5573109
Barium (Ba)-Total	0.000232		0.00000090	mg/dm2.day	26-AUG-21	27-AUG-21	R5571388
Beryllium (Be)-Total	<0.0000090		0.0000090	mg/dm2.day	26-AUG-21	27-AUG-21	R5571388
Bismuth (Bi)-Total	<0.0000090		0.0000090	mg/dm2.day	26-AUG-21	27-AUG-21	R5571388
Boron (B)-Total	<0.00018		0.00018	mg/dm2.day	26-AUG-21	27-AUG-21	R5571388
Cadmium (Cd)-Total	0.00000727		0.00000090	mg/dm2.day	26-AUG-21	27-AUG-21	R5571388
Calcium (Ca)-Total	0.168		0.00036	mg/dm2.day	26-AUG-21	27-AUG-21	R5571388
Chromium (Cr)-Total	0.0000357		0.0000090	mg/dm2.day	30-AUG-21	31-AUG-21	R5573109
Cobalt (Co)-Total	0.0000162		0.0000018	mg/dm2.day	26-AUG-21	27-AUG-21	R5571388
Copper (Cu)-Total	0.000237		0.0000090	mg/dm2.day	26-AUG-21	27-AUG-21	R5571388
Lead (Pb)-Total	0.000382		0.00000090	mg/dm2.day	26-AUG-21	27-AUG-21	R5571388
Iron (Fe)-Total	0.0366		0.00054	mg/dm2.day	26-AUG-21	27-AUG-21	R5571388
Lithium (Li)-Total	<0.000090		0.000090	mg/dm2.day	26-AUG-21	27-AUG-21	R5571388
Magnesium (Mg)-Total	0.0467		0.000090	mg/dm2.day	26-AUG-21	27-AUG-21	R5571388
Manganese (Mn)-Total	0.00381		0.0000018	mg/dm2.day	26-AUG-21	27-AUG-21	R5571388
Molybdenum (Mo)-Total	0.00000514		0.00000090	mg/dm2.day	26-AUG-21	27-AUG-21	R5571388
Nickel (Ni)-Total	0.0000572		0.0000090	mg/dm2.day	26-AUG-21	27-AUG-21	R5571388
Phosphorus (P)-Total	0.0510		0.00090	mg/dm2.day	26-AUG-21	27-AUG-21	R5571388
Potassium (K)-Total	0.0773		0.00090	mg/dm2.day	26-AUG-21	27-AUG-21	R5571388
Selenium (Se)-Total	<0.000018		0.000018	mg/dm2.day	26-AUG-21	27-AUG-21	R5571388
Silicon (Si)-Total	0.0516		0.00090	mg/dm2.day	26-AUG-21	27-AUG-21	R5571388
Silver (Ag)-Total	0.00000636		0.00000018	mg/dm2.day	26-AUG-21	27-AUG-21	R5571388
Sodium (Na)-Total	0.00761		0.00090	mg/dm2.day	26-AUG-21	27-AUG-21	R5571388
Strontium (Sr)-Total	0.000316		0.0000018	mg/dm2.day	26-AUG-21	27-AUG-21	R5571388
Thallium (Tl)-Total	<0.0000018		0.0000018	mg/dm2.day	26-AUG-21	27-AUG-21	R5571388
Tin (Sn)-Total	<0.0000018		0.0000018	mg/dm2.day	26-AUG-21	27-AUG-21	R5571388
Titanium (Ti)-Total	0.00079		0.00018	mg/dm2.day	26-AUG-21	27-AUG-21	R5571388
Uranium (U)-Total	0.00000107		0.00000018	mg/dm2.day	26-AUG-21	27-AUG-21	R5571388
Vanadium (V)-Total	0.000061		0.000018	mg/dm2.day	26-AUG-21	27-AUG-21	R5571388
Zinc (Zn)-Total	0.00202		0.000054	mg/dm2.day	26-AUG-21	27-AUG-21	R5571388
L2623313-28 CP1-DUSTFALL-7							
Sampled By: Client on 29-JUL-21							
Matrix: Dustfall							
Dustfalls-Total, Soluble, Insoluble +FV							
Total Dustfall	4.08		0.10	mg/dm2.day		26-AUG-21	R5572363
Total Insoluble Dustfall	1.29		0.10	mg/dm2.day		26-AUG-21	R5572363
Total Soluble Dustfall	2.79		0.10	mg/dm2.day		26-AUG-21	R5572363
Fixed Dustfall	1.27		0.10	mg/dm2.day		26-AUG-21	R5572363
Fixed Insoluble Dustfall	0.47		0.10	mg/dm2.day		26-AUG-21	R5572363
Fixed Soluble Dustfall	0.80		0.10	mg/dm2.day		26-AUG-21	R5572363
Volatile Dustfall	2.81		0.10	mg/dm2.day		26-AUG-21	R5572363
Volatile Insoluble Dustfall	0.82		0.10	mg/dm2.day		26-AUG-21	R5572363
Volatile Soluble Dustfall	1.99		0.10	mg/dm2.day		26-AUG-21	R5572363
Total Metals in Dustfalls by ICPMS							
Aluminum (Al)-Total	0.000926		0.000047	mg/dm2.day	26-AUG-21	27-AUG-21	R5571388

* Refer to Referenced Information for Qualifiers (if any) and Methodology.

ALS ENVIRONMENTAL ANALYTICAL REPORT

Sample Details/Parameters	Result	Qualifier*	D.L.	Units	Extracted	Analyzed	Batch
L2623313-28 CP1-DUSTFALL-7							
Sampled By: Client on 29-JUL-21							
Matrix: Dustfall							
Total Metals in Dustfalls by ICPMS							
Interval			1	days		26-AUG-21	R5570588
Antimony (Sb)-Total	<0.0000016		0.0000016	mg/dm2.day	26-AUG-21	27-AUG-21	R5571388
Arsenic (As)-Total	0.0000039		0.0000016	mg/dm2.day	26-AUG-21	27-AUG-21	R5571388
Barium (Ba)-Total	0.0000294		0.00000078	mg/dm2.day	26-AUG-21	27-AUG-21	R5571388
Beryllium (Be)-Total	<0.0000078		0.0000078	mg/dm2.day	26-AUG-21	27-AUG-21	R5571388
Bismuth (Bi)-Total	<0.0000078		0.0000078	mg/dm2.day	26-AUG-21	27-AUG-21	R5571388
Boron (B)-Total	<0.00016		0.00016	mg/dm2.day	26-AUG-21	27-AUG-21	R5571388
Cadmium (Cd)-Total	0.00000106		0.00000078	mg/dm2.day	26-AUG-21	27-AUG-21	R5571388
Calcium (Ca)-Total	0.0685		0.00031	mg/dm2.day	26-AUG-21	27-AUG-21	R5571388
Chromium (Cr)-Total	0.0000086		0.0000078	mg/dm2.day	26-AUG-21	27-AUG-21	R5571388
Cobalt (Co)-Total	0.0000024		0.0000016	mg/dm2.day	26-AUG-21	27-AUG-21	R5571388
Copper (Cu)-Total	0.0000434		0.0000078	mg/dm2.day	26-AUG-21	27-AUG-21	R5571388
Lead (Pb)-Total	0.00000411		0.00000078	mg/dm2.day	26-AUG-21	27-AUG-21	R5571388
Iron (Fe)-Total	0.00132		0.00047	mg/dm2.day	26-AUG-21	27-AUG-21	R5571388
Lithium (Li)-Total	<0.000078		0.000078	mg/dm2.day	26-AUG-21	27-AUG-21	R5571388
Magnesium (Mg)-Total	0.0222		0.000078	mg/dm2.day	26-AUG-21	27-AUG-21	R5571388
Manganese (Mn)-Total	0.000603		0.0000016	mg/dm2.day	26-AUG-21	27-AUG-21	R5571388
Molybdenum (Mo)-Total	<0.00000078		0.00000078	mg/dm2.day	26-AUG-21	27-AUG-21	R5571388
Nickel (Ni)-Total	<0.0000078		0.0000078	mg/dm2.day	26-AUG-21	27-AUG-21	R5571388
Phosphorus (P)-Total	0.0692		0.00078	mg/dm2.day	26-AUG-21	27-AUG-21	R5571388
Potassium (K)-Total	0.122		0.00078	mg/dm2.day	26-AUG-21	27-AUG-21	R5571388
Selenium (Se)-Total	<0.000016		0.000016	mg/dm2.day	26-AUG-21	27-AUG-21	R5571388
Silicon (Si)-Total	0.00135		0.00078	mg/dm2.day	26-AUG-21	27-AUG-21	R5571388
Silver (Ag)-Total	<0.00000016		0.00000016	mg/dm2.day	26-AUG-21	27-AUG-21	R5571388
Sodium (Na)-Total	0.0901		0.00078	mg/dm2.day	26-AUG-21	27-AUG-21	R5571388
Strontium (Sr)-Total	0.0000979		0.0000016	mg/dm2.day	26-AUG-21	27-AUG-21	R5571388
Thallium (Tl)-Total	<0.0000016		0.0000016	mg/dm2.day	26-AUG-21	27-AUG-21	R5571388
Tin (Sn)-Total	<0.0000016		0.0000016	mg/dm2.day	26-AUG-21	27-AUG-21	R5571388
Titanium (Ti)-Total	<0.00016		0.00016	mg/dm2.day	26-AUG-21	27-AUG-21	R5571388
Uranium (U)-Total	<0.00000016		0.00000016	mg/dm2.day	26-AUG-21	27-AUG-21	R5571388
Vanadium (V)-Total	<0.000016		0.000016	mg/dm2.day	26-AUG-21	27-AUG-21	R5571388
Zinc (Zn)-Total	0.000367		0.000047	mg/dm2.day	26-AUG-21	27-AUG-21	R5571388
L2623313-29 WCP1-DUSTFALL-7							
Sampled By: Client on 29-JUL-21							
Matrix: Dustfall							
Dustfalls-Total, Soluble, Insoluble +FV							
Total Dustfall	22.2		0.10	mg/dm2.day		26-AUG-21	R5572363
Total Insoluble Dustfall	10.1		0.11	mg/dm2.day		26-AUG-21	R5572363
Total Soluble Dustfall	12.1		0.11	mg/dm2.day		26-AUG-21	R5572363
Fixed Dustfall	3.84		0.11	mg/dm2.day		26-AUG-21	R5572363
Fixed Insoluble Dustfall	1.37		0.11	mg/dm2.day		26-AUG-21	R5572363
Fixed Soluble Dustfall	2.47		0.11	mg/dm2.day		26-AUG-21	R5572363
Volatile Dustfall	18.4		0.11	mg/dm2.day		26-AUG-21	R5572363
Volatile Insoluble Dustfall	8.71		0.11	mg/dm2.day		26-AUG-21	R5572363
Volatile Soluble Dustfall	9.66		0.11	mg/dm2.day		26-AUG-21	R5572363
Total Metals in Dustfalls by ICPMS							

* Refer to Referenced Information for Qualifiers (if any) and Methodology.

ALS ENVIRONMENTAL ANALYTICAL REPORT

Sample Details/Parameters	Result	Qualifier*	D.L.	Units	Extracted	Analyzed	Batch
L2623313-29 WCP1-DUSTFALL-7							
Sampled By: Client on 29-JUL-21							
Matrix: Dustfall							
Total Metals in Dustfalls by ICPMS							
Aluminum (Al)-Total	0.00764		0.000069	mg/dm2.day	26-AUG-21	27-AUG-21	R5571388
Interval			1	days		26-AUG-21	R5570588
Antimony (Sb)-Total	<0.0000023		0.0000023	mg/dm2.day	26-AUG-21	27-AUG-21	R5571388
Arsenic (As)-Total	0.0000113		0.0000023	mg/dm2.day	26-AUG-21	27-AUG-21	R5571388
Barium (Ba)-Total	0.000242		0.0000012	mg/dm2.day	26-AUG-21	27-AUG-21	R5571388
Beryllium (Be)-Total	<0.000012		0.000012	mg/dm2.day	26-AUG-21	27-AUG-21	R5571388
Bismuth (Bi)-Total	<0.000012		0.000012	mg/dm2.day	26-AUG-21	27-AUG-21	R5571388
Boron (B)-Total	0.00061		0.00023	mg/dm2.day	26-AUG-21	27-AUG-21	R5571388
Cadmium (Cd)-Total	0.0000142		0.0000012	mg/dm2.day	26-AUG-21	27-AUG-21	R5571388
Calcium (Ca)-Total	0.162		0.00046	mg/dm2.day	26-AUG-21	27-AUG-21	R5571388
Chromium (Cr)-Total	0.000029		0.000012	mg/dm2.day	26-AUG-21	27-AUG-21	R5571388
Cobalt (Co)-Total	0.0000106		0.0000023	mg/dm2.day	26-AUG-21	27-AUG-21	R5571388
Copper (Cu)-Total	0.00128		0.000012	mg/dm2.day	26-AUG-21	27-AUG-21	R5571388
Lead (Pb)-Total	0.0000425		0.0000012	mg/dm2.day	26-AUG-21	27-AUG-21	R5571388
Iron (Fe)-Total	0.0116		0.00069	mg/dm2.day	26-AUG-21	27-AUG-21	R5571388
Lithium (Li)-Total	<0.00012		0.00012	mg/dm2.day	26-AUG-21	27-AUG-21	R5571388
Magnesium (Mg)-Total	0.0763		0.00012	mg/dm2.day	26-AUG-21	27-AUG-21	R5571388
Manganese (Mn)-Total	0.00160		0.0000023	mg/dm2.day	26-AUG-21	27-AUG-21	R5571388
Molybdenum (Mo)-Total	0.0000325		0.0000012	mg/dm2.day	26-AUG-21	27-AUG-21	R5571388
Nickel (Ni)-Total	0.000136		0.000012	mg/dm2.day	26-AUG-21	27-AUG-21	R5571388
Phosphorus (P)-Total	0.373		0.0012	mg/dm2.day	26-AUG-21	27-AUG-21	R5571388
Potassium (K)-Total	0.709		0.0012	mg/dm2.day	26-AUG-21	27-AUG-21	R5571388
Selenium (Se)-Total	0.000028		0.000023	mg/dm2.day	26-AUG-21	27-AUG-21	R5571388
Silicon (Si)-Total	0.0127		0.0012	mg/dm2.day	26-AUG-21	27-AUG-21	R5571388
Silver (Ag)-Total	0.00000416		0.00000023	mg/dm2.day	26-AUG-21	27-AUG-21	R5571388
Sodium (Na)-Total	0.0727		0.0012	mg/dm2.day	26-AUG-21	27-AUG-21	R5571388
Strontium (Sr)-Total	0.000282		0.0000023	mg/dm2.day	26-AUG-21	27-AUG-21	R5571388
Thallium (Tl)-Total	<0.0000023		0.0000023	mg/dm2.day	26-AUG-21	27-AUG-21	R5571388
Tin (Sn)-Total	<0.0000023		0.0000023	mg/dm2.day	26-AUG-21	27-AUG-21	R5571388
Titanium (Ti)-Total	<0.00023		0.00023	mg/dm2.day	26-AUG-21	27-AUG-21	R5571388
Uranium (U)-Total	0.00000135		0.00000023	mg/dm2.day	26-AUG-21	27-AUG-21	R5571388
Vanadium (V)-Total	<0.000023		0.000023	mg/dm2.day	26-AUG-21	27-AUG-21	R5571388
Zinc (Zn)-Total	0.00545		0.000069	mg/dm2.day	26-AUG-21	27-AUG-21	R5571388
L2623313-30 GH1-DUSTFALL-7							
Sampled By: Client on 29-JUL-21							
Matrix: Dustfall							
Dustfalls-Total, Soluble, Insoluble +FV							
Total Dustfall	15.5		0.11	mg/dm2.day		26-AUG-21	R5572363
Total Insoluble Dustfall	6.24		0.10	mg/dm2.day		26-AUG-21	R5572363
Total Soluble Dustfall	9.25		0.10	mg/dm2.day		26-AUG-21	R5572363
Fixed Dustfall	2.04		0.10	mg/dm2.day		26-AUG-21	R5572363
Fixed Insoluble Dustfall	0.77		0.10	mg/dm2.day		26-AUG-21	R5572363
Fixed Soluble Dustfall	1.27		0.10	mg/dm2.day		26-AUG-21	R5572363
Volatile Dustfall	13.5		0.10	mg/dm2.day		26-AUG-21	R5572363
Volatile Insoluble Dustfall	5.47		0.10	mg/dm2.day		26-AUG-21	R5572363
Volatile Soluble Dustfall	7.99		0.10	mg/dm2.day		26-AUG-21	R5572363
Total Metals in Dustfalls by ICPMS							
Aluminum (Al)-Total	0.00491		0.000045	mg/dm2.day	26-AUG-21	27-AUG-21	R5571388
Interval			1	days		26-AUG-21	R5570588

* Refer to Referenced Information for Qualifiers (if any) and Methodology.

ALS ENVIRONMENTAL ANALYTICAL REPORT

Sample Details/Parameters	Result	Qualifier*	D.L.	Units	Extracted	Analyzed	Batch
L2623313-30 GH1-DUSTFALL-7							
Sampled By: Client on 29-JUL-21							
Matrix: Dustfall							
Total Metals in Dustfalls by ICPMS							
Antimony (Sb)-Total	<0.0000015		0.0000015	mg/dm2.day	26-AUG-21	27-AUG-21	R5571388
Arsenic (As)-Total	0.0000054		0.0000015	mg/dm2.day	26-AUG-21	27-AUG-21	R5571388
Barium (Ba)-Total	0.0000833		0.00000075	mg/dm2.day	26-AUG-21	27-AUG-21	R5571388
Beryllium (Be)-Total	<0.0000075		0.0000075	mg/dm2.day	26-AUG-21	27-AUG-21	R5571388
Bismuth (Bi)-Total	<0.0000075		0.0000075	mg/dm2.day	26-AUG-21	27-AUG-21	R5571388
Boron (B)-Total	0.00025		0.00015	mg/dm2.day	26-AUG-21	27-AUG-21	R5571388
Cadmium (Cd)-Total	0.00000151		0.00000075	mg/dm2.day	26-AUG-21	27-AUG-21	R5571388
Calcium (Ca)-Total	0.0637		0.00030	mg/dm2.day	26-AUG-21	27-AUG-21	R5571388
Chromium (Cr)-Total	0.0000201		0.0000075	mg/dm2.day	26-AUG-21	27-AUG-21	R5571388
Cobalt (Co)-Total	0.0000049		0.0000015	mg/dm2.day	26-AUG-21	27-AUG-21	R5571388
Copper (Cu)-Total	0.000694		0.0000075	mg/dm2.day	26-AUG-21	27-AUG-21	R5571388
Lead (Pb)-Total	0.0000152		0.00000075	mg/dm2.day	26-AUG-21	27-AUG-21	R5571388
Iron (Fe)-Total	0.00666		0.00045	mg/dm2.day	26-AUG-21	27-AUG-21	R5571388
Lithium (Li)-Total	<0.000075		0.000075	mg/dm2.day	26-AUG-21	27-AUG-21	R5571388
Magnesium (Mg)-Total	0.0427		0.000075	mg/dm2.day	26-AUG-21	27-AUG-21	R5571388
Manganese (Mn)-Total	0.000653		0.0000015	mg/dm2.day	26-AUG-21	27-AUG-21	R5571388
Molybdenum (Mo)-Total	0.00000863		0.00000075	mg/dm2.day	26-AUG-21	27-AUG-21	R5571388
Nickel (Ni)-Total	0.0000533		0.0000075	mg/dm2.day	26-AUG-21	27-AUG-21	R5571388
Phosphorus (P)-Total	0.291		0.00075	mg/dm2.day	26-AUG-21	27-AUG-21	R5571388
Potassium (K)-Total	0.463		0.00075	mg/dm2.day	26-AUG-21	27-AUG-21	R5571388
Selenium (Se)-Total	<0.000015		0.000015	mg/dm2.day	26-AUG-21	27-AUG-21	R5571388
Silicon (Si)-Total	0.00900		0.00075	mg/dm2.day	26-AUG-21	27-AUG-21	R5571388
Silver (Ag)-Total	0.00000062		0.00000015	mg/dm2.day	26-AUG-21	27-AUG-21	R5571388
Sodium (Na)-Total	0.0166		0.00075	mg/dm2.day	26-AUG-21	27-AUG-21	R5571388
Strontium (Sr)-Total	0.000296		0.0000015	mg/dm2.day	26-AUG-21	27-AUG-21	R5571388
Thallium (Tl)-Total	<0.0000015		0.0000015	mg/dm2.day	26-AUG-21	27-AUG-21	R5571388
Tin (Sn)-Total	<0.0000015		0.0000015	mg/dm2.day	26-AUG-21	27-AUG-21	R5571388
Titanium (Ti)-Total	<0.00015		0.00015	mg/dm2.day	26-AUG-21	27-AUG-21	R5571388
Uranium (U)-Total	0.00000022		0.00000015	mg/dm2.day	26-AUG-21	27-AUG-21	R5571388
Vanadium (V)-Total	<0.000015		0.000015	mg/dm2.day	26-AUG-21	27-AUG-21	R5571388
Zinc (Zn)-Total	0.00268		0.000045	mg/dm2.day	26-AUG-21	27-AUG-21	R5571388
L2623313-31 SPP1-DUSTFALL-29							
Sampled By: Client on 07-JUL-21							
Matrix: Dustfall							
Dustfalls-Total, Soluble, Insoluble +FV							
Total Dustfall	58.9		0.43	mg/dm2.day		26-AUG-21	R5572363
Total Insoluble Dustfall	34.0		0.43	mg/dm2.day		26-AUG-21	R5572363
Total Soluble Dustfall	25.0		0.43	mg/dm2.day		26-AUG-21	R5572363
Fixed Dustfall	15.9		0.43	mg/dm2.day		26-AUG-21	R5572363
Fixed Insoluble Dustfall	9.29		0.43	mg/dm2.day		26-AUG-21	R5572363
Fixed Soluble Dustfall	6.61		0.43	mg/dm2.day		26-AUG-21	R5572363
Volatile Dustfall	43.0		0.43	mg/dm2.day		26-AUG-21	R5572363
Volatile Insoluble Dustfall	24.7		0.43	mg/dm2.day		26-AUG-21	R5572363
Volatile Soluble Dustfall	18.3		0.43	mg/dm2.day		26-AUG-21	R5572363
Total Metals in Dustfalls by ICPMS							
Aluminum (Al)-Total	0.0695		0.00020	mg/dm2.day	26-AUG-21	27-AUG-21	R5571388

* Refer to Referenced Information for Qualifiers (if any) and Methodology.

ALS ENVIRONMENTAL ANALYTICAL REPORT

Sample Details/Parameters	Result	Qualifier*	D.L.	Units	Extracted	Analyzed	Batch
L2623313-31 SPP1-DUSTFALL-29							
Sampled By: Client on 07-JUL-21							
Matrix: Dustfall							
Total Metals in Dustfalls by ICPMS							
Interval			1	days		26-AUG-21	R5570588
Antimony (Sb)-Total	0.0000274		0.0000067	mg/dm2.day	26-AUG-21	27-AUG-21	R5571388
Arsenic (As)-Total	0.000180		0.0000067	mg/dm2.day	26-AUG-21	27-AUG-21	R5571388
Barium (Ba)-Total	0.00134		0.0000034	mg/dm2.day	26-AUG-21	27-AUG-21	R5571388
Beryllium (Be)-Total	<0.000034		0.000034	mg/dm2.day	26-AUG-21	27-AUG-21	R5571388
Bismuth (Bi)-Total	<0.000034		0.000034	mg/dm2.day	26-AUG-21	27-AUG-21	R5571388
Boron (B)-Total	0.00302		0.00067	mg/dm2.day	26-AUG-21	27-AUG-21	R5571388
Cadmium (Cd)-Total	0.0000695		0.0000034	mg/dm2.day	26-AUG-21	27-AUG-21	R5571388
Calcium (Ca)-Total	1.16		0.0013	mg/dm2.day	26-AUG-21	27-AUG-21	R5571388
Chromium (Cr)-Total	0.000171		0.000034	mg/dm2.day	26-AUG-21	27-AUG-21	R5571388
Cobalt (Co)-Total	0.0000566		0.0000067	mg/dm2.day	26-AUG-21	27-AUG-21	R5571388
Copper (Cu)-Total	0.0108		0.000034	mg/dm2.day	26-AUG-21	27-AUG-21	R5571388
Lead (Pb)-Total	0.00108		0.0000034	mg/dm2.day	26-AUG-21	27-AUG-21	R5571388
Iron (Fe)-Total	0.0950		0.0020	mg/dm2.day	26-AUG-21	27-AUG-21	R5571388
Lithium (Li)-Total	0.00042		0.00034	mg/dm2.day	26-AUG-21	27-AUG-21	R5571388
Magnesium (Mg)-Total	0.467		0.00034	mg/dm2.day	26-AUG-21	27-AUG-21	R5571388
Manganese (Mn)-Total	0.0104		0.0000067	mg/dm2.day	26-AUG-21	27-AUG-21	R5571388
Molybdenum (Mo)-Total	0.000185		0.0000034	mg/dm2.day	26-AUG-21	27-AUG-21	R5571388
Nickel (Ni)-Total	0.000855		0.000034	mg/dm2.day	26-AUG-21	27-AUG-21	R5571388
Phosphorus (P)-Total	1.61		0.0034	mg/dm2.day	26-AUG-21	27-AUG-21	R5571388
Potassium (K)-Total	2.53		0.0034	mg/dm2.day	26-AUG-21	27-AUG-21	R5571388
Selenium (Se)-Total	0.000139		0.000067	mg/dm2.day	26-AUG-21	27-AUG-21	R5571388
Silicon (Si)-Total	0.215		0.0034	mg/dm2.day	26-AUG-21	27-AUG-21	R5571388
Silver (Ag)-Total	0.0000212		0.00000067	mg/dm2.day	26-AUG-21	27-AUG-21	R5571388
Sodium (Na)-Total	0.0751		0.0034	mg/dm2.day	26-AUG-21	27-AUG-21	R5571388
Strontium (Sr)-Total	0.00265		0.0000067	mg/dm2.day	26-AUG-21	27-AUG-21	R5571388
Thallium (Tl)-Total	<0.0000067		0.0000067	mg/dm2.day	26-AUG-21	27-AUG-21	R5571388
Tin (Sn)-Total	0.0000131		0.0000067	mg/dm2.day	26-AUG-21	27-AUG-21	R5571388
Titanium (Ti)-Total	0.00124		0.00067	mg/dm2.day	26-AUG-21	27-AUG-21	R5571388
Uranium (U)-Total	0.00000404		0.00000067	mg/dm2.day	26-AUG-21	27-AUG-21	R5571388
Vanadium (V)-Total	0.000130		0.000067	mg/dm2.day	26-AUG-21	27-AUG-21	R5571388
Zinc (Zn)-Total	0.0371		0.00020	mg/dm2.day	26-AUG-21	27-AUG-21	R5571388
L2623313-32 SPP1-DUSTFALL-30							
Sampled By: Client on 14-JUL-21							
Matrix: Dustfall							
Dustfalls-Total, Soluble, Insoluble +FV							
Total Dustfall	176		0.43	mg/dm2.day		26-AUG-21	R5572363
Total Insoluble Dustfall	114		0.43	mg/dm2.day		26-AUG-21	R5572363
Total Soluble Dustfall	62.9		0.43	mg/dm2.day		26-AUG-21	R5572363
Fixed Dustfall	34.2		0.43	mg/dm2.day		26-AUG-21	R5572363
Fixed Insoluble Dustfall	17.2		0.43	mg/dm2.day		26-AUG-21	R5572363
Fixed Soluble Dustfall	17.1		0.43	mg/dm2.day		26-AUG-21	R5572363
Volatile Dustfall	142		0.43	mg/dm2.day		26-AUG-21	R5572363
Volatile Insoluble Dustfall	96.4		0.43	mg/dm2.day		26-AUG-21	R5572363
Volatile Soluble Dustfall	45.9		0.43	mg/dm2.day		26-AUG-21	R5572363
Total Metals in Dustfalls by ICPMS							
Aluminum (Al)-Total	0.0832		0.00019	mg/dm2.day	26-AUG-21	27-AUG-21	R5571388
Interval			1	days		26-AUG-21	R5570588
Antimony (Sb)-Total	0.0000483		0.0000064	mg/dm2.day	26-AUG-21	27-AUG-21	R5571388

* Refer to Referenced Information for Qualifiers (if any) and Methodology.

ALS ENVIRONMENTAL ANALYTICAL REPORT

Sample Details/Parameters	Result	Qualifier*	D.L.	Units	Extracted	Analyzed	Batch
L2623313-32 SPP1-DUSTFALL-30							
Sampled By: Client on 14-JUL-21							
Matrix: Dustfall							
Total Metals in Dustfalls by ICPMS							
Arsenic (As)-Total	0.000300		0.0000064	mg/dm2.day	26-AUG-21	27-AUG-21	R5571388
Barium (Ba)-Total	0.00187		0.0000032	mg/dm2.day	26-AUG-21	27-AUG-21	R5571388
Beryllium (Be)-Total	<0.000032		0.000032	mg/dm2.day	26-AUG-21	27-AUG-21	R5571388
Bismuth (Bi)-Total	<0.000032		0.000032	mg/dm2.day	26-AUG-21	27-AUG-21	R5571388
Boron (B)-Total	0.00756		0.00064	mg/dm2.day	26-AUG-21	27-AUG-21	R5571388
Cadmium (Cd)-Total	0.0000848		0.0000032	mg/dm2.day	26-AUG-21	27-AUG-21	R5571388
Calcium (Ca)-Total	1.67		0.0013	mg/dm2.day	26-AUG-21	27-AUG-21	R5571388
Chromium (Cr)-Total	0.000179		0.000032	mg/dm2.day	26-AUG-21	27-AUG-21	R5571388
Cobalt (Co)-Total	0.0000837		0.0000064	mg/dm2.day	26-AUG-21	27-AUG-21	R5571388
Copper (Cu)-Total	0.0109		0.000032	mg/dm2.day	26-AUG-21	27-AUG-21	R5571388
Lead (Pb)-Total	0.00205		0.0000032	mg/dm2.day	26-AUG-21	27-AUG-21	R5571388
Iron (Fe)-Total	0.114		0.0019	mg/dm2.day	26-AUG-21	27-AUG-21	R5571388
Lithium (Li)-Total	<0.00032		0.00032	mg/dm2.day	26-AUG-21	27-AUG-21	R5571388
Magnesium (Mg)-Total	0.626		0.00032	mg/dm2.day	26-AUG-21	27-AUG-21	R5571388
Manganese (Mn)-Total	0.0206		0.0000064	mg/dm2.day	26-AUG-21	27-AUG-21	R5571388
Molybdenum (Mo)-Total	0.000467		0.0000032	mg/dm2.day	26-AUG-21	27-AUG-21	R5571388
Nickel (Ni)-Total	0.00369		0.000032	mg/dm2.day	26-AUG-21	27-AUG-21	R5571388
Phosphorus (P)-Total	3.94		0.0032	mg/dm2.day	26-AUG-21	27-AUG-21	R5571388
Potassium (K)-Total	6.64		0.0032	mg/dm2.day	26-AUG-21	27-AUG-21	R5571388
Selenium (Se)-Total	0.000240		0.000064	mg/dm2.day	26-AUG-21	27-AUG-21	R5571388
Silicon (Si)-Total	0.239		0.0032	mg/dm2.day	26-AUG-21	27-AUG-21	R5571388
Silver (Ag)-Total	0.0000363		0.00000064	mg/dm2.day	26-AUG-21	27-AUG-21	R5571388
Sodium (Na)-Total	0.299		0.0032	mg/dm2.day	26-AUG-21	27-AUG-21	R5571388
Strontium (Sr)-Total	0.00413		0.0000064	mg/dm2.day	26-AUG-21	27-AUG-21	R5571388
Thallium (Tl)-Total	<0.0000064		0.0000064	mg/dm2.day	26-AUG-21	27-AUG-21	R5571388
Tin (Sn)-Total	<0.0000064		0.0000064	mg/dm2.day	26-AUG-21	27-AUG-21	R5571388
Titanium (Ti)-Total	0.00093		0.00064	mg/dm2.day	26-AUG-21	27-AUG-21	R5571388
Uranium (U)-Total	0.00000424		0.00000064	mg/dm2.day	26-AUG-21	27-AUG-21	R5571388
Vanadium (V)-Total	0.000137		0.000064	mg/dm2.day	26-AUG-21	27-AUG-21	R5571388
Zinc (Zn)-Total	0.0668		0.00019	mg/dm2.day	26-AUG-21	27-AUG-21	R5571388
L2623313-33 SPP1-DUSTFALL-31							
Sampled By: Client on 21-JUL-21							
Matrix: Dustfall							
Dustfalls-Total, Soluble, Insoluble +FV							
Total Dustfall	83.7		0.43	mg/dm2.day		26-AUG-21	R5572363
Total Insoluble Dustfall	48.6		0.43	mg/dm2.day		26-AUG-21	R5572363
Total Soluble Dustfall	35.1		0.43	mg/dm2.day		26-AUG-21	R5572363
Fixed Dustfall	19.0		0.43	mg/dm2.day		26-AUG-21	R5572363
Fixed Insoluble Dustfall	9.99		0.43	mg/dm2.day		26-AUG-21	R5572363
Fixed Soluble Dustfall	8.99		0.43	mg/dm2.day		26-AUG-21	R5572363
Volatile Dustfall	64.7		0.43	mg/dm2.day		26-AUG-21	R5572363
Volatile Insoluble Dustfall	38.6		0.43	mg/dm2.day		26-AUG-21	R5572363
Volatile Soluble Dustfall	26.1		0.43	mg/dm2.day		26-AUG-21	R5572363
Total Metals in Dustfalls by ICPMS							
Aluminum (Al)-Total	0.0735		0.00020	mg/dm2.day	26-AUG-21	27-AUG-21	R5571388
Interval			1	days		26-AUG-21	R5570588
Antimony (Sb)-Total	0.0000421		0.0000067	mg/dm2.day	26-AUG-21	27-AUG-21	R5571388
Arsenic (As)-Total	0.000252		0.0000067	mg/dm2.day	26-AUG-21	27-AUG-21	R5571388
Barium (Ba)-Total	0.00111		0.0000034	mg/dm2.day	26-AUG-21	27-AUG-21	R5571388

* Refer to Referenced Information for Qualifiers (if any) and Methodology.

ALS ENVIRONMENTAL ANALYTICAL REPORT

Sample Details/Parameters	Result	Qualifier*	D.L.	Units	Extracted	Analyzed	Batch
L2623313-33 SPP1-DUSTFALL-31							
Sampled By: Client on 21-JUL-21							
Matrix: Dustfall							
Total Metals in Dustfalls by ICPMS							
Beryllium (Be)-Total	<0.000034		0.000034	mg/dm2.day	26-AUG-21	27-AUG-21	R5571388
Bismuth (Bi)-Total	<0.000034		0.000034	mg/dm2.day	26-AUG-21	27-AUG-21	R5571388
Boron (B)-Total	0.00381		0.00067	mg/dm2.day	26-AUG-21	27-AUG-21	R5571388
Cadmium (Cd)-Total	0.0000755		0.0000034	mg/dm2.day	26-AUG-21	27-AUG-21	R5571388
Calcium (Ca)-Total	1.49		0.0013	mg/dm2.day	26-AUG-21	27-AUG-21	R5571388
Chromium (Cr)-Total	0.000194		0.000034	mg/dm2.day	26-AUG-21	27-AUG-21	R5571388
Cobalt (Co)-Total	0.0000522		0.0000067	mg/dm2.day	26-AUG-21	27-AUG-21	R5571388
Copper (Cu)-Total	0.0125		0.000034	mg/dm2.day	26-AUG-21	27-AUG-21	R5571388
Lead (Pb)-Total	0.00165		0.0000034	mg/dm2.day	26-AUG-21	27-AUG-21	R5571388
Iron (Fe)-Total	0.0988		0.0020	mg/dm2.day	26-AUG-21	27-AUG-21	R5571388
Lithium (Li)-Total	<0.00034		0.00034	mg/dm2.day	26-AUG-21	27-AUG-21	R5571388
Magnesium (Mg)-Total	0.504		0.00034	mg/dm2.day	26-AUG-21	27-AUG-21	R5571388
Manganese (Mn)-Total	0.0132		0.0000067	mg/dm2.day	26-AUG-21	27-AUG-21	R5571388
Molybdenum (Mo)-Total	0.000204		0.0000034	mg/dm2.day	26-AUG-21	27-AUG-21	R5571388
Nickel (Ni)-Total	0.00120		0.000034	mg/dm2.day	26-AUG-21	27-AUG-21	R5571388
Phosphorus (P)-Total	2.77		0.0034	mg/dm2.day	26-AUG-21	27-AUG-21	R5571388
Potassium (K)-Total	3.44		0.0034	mg/dm2.day	26-AUG-21	27-AUG-21	R5571388
Selenium (Se)-Total	0.000162		0.000067	mg/dm2.day	26-AUG-21	27-AUG-21	R5571388
Silicon (Si)-Total	0.169		0.0034	mg/dm2.day	26-AUG-21	27-AUG-21	R5571388
Silver (Ag)-Total	0.0000487		0.00000067	mg/dm2.day	26-AUG-21	27-AUG-21	R5571388
Sodium (Na)-Total	0.192		0.0034	mg/dm2.day	26-AUG-21	27-AUG-21	R5571388
Strontium (Sr)-Total	0.00228		0.0000067	mg/dm2.day	26-AUG-21	27-AUG-21	R5571388
Thallium (Tl)-Total	<0.0000067		0.0000067	mg/dm2.day	26-AUG-21	27-AUG-21	R5571388
Tin (Sn)-Total	<0.0000067		0.0000067	mg/dm2.day	26-AUG-21	27-AUG-21	R5571388
Titanium (Ti)-Total	0.00102		0.00067	mg/dm2.day	26-AUG-21	27-AUG-21	R5571388
Uranium (U)-Total	0.00000316		0.00000067	mg/dm2.day	26-AUG-21	27-AUG-21	R5571388
Vanadium (V)-Total	0.000114		0.000067	mg/dm2.day	26-AUG-21	27-AUG-21	R5571388
Zinc (Zn)-Total	0.0552		0.00020	mg/dm2.day	26-AUG-21	27-AUG-21	R5571388
L2623313-34 SPP1-DUSTFALL-32							
Sampled By: Client on 28-JUL-21							
Matrix: Dustfall							
Dustfalls-Total, Soluble, Insoluble +FV							
Total Dustfall	139		0.43	mg/dm2.day		26-AUG-21	R5572363
Total Insoluble Dustfall	87.8		0.43	mg/dm2.day		26-AUG-21	R5572363
Total Soluble Dustfall	51.7		0.43	mg/dm2.day		26-AUG-21	R5572363
Fixed Dustfall	31.1		0.43	mg/dm2.day		26-AUG-21	R5572363
Fixed Insoluble Dustfall	15.0		0.43	mg/dm2.day		26-AUG-21	R5572363
Fixed Soluble Dustfall	16.1		0.43	mg/dm2.day		26-AUG-21	R5572363
Volatile Dustfall	108		0.43	mg/dm2.day		26-AUG-21	R5572363
Volatile Insoluble Dustfall	72.7		0.43	mg/dm2.day		26-AUG-21	R5572363
Volatile Soluble Dustfall	35.7		0.43	mg/dm2.day		26-AUG-21	R5572363
Total Metals in Dustfalls by ICPMS							
Aluminum (Al)-Total	0.0666		0.00017	mg/dm2.day	26-AUG-21	27-AUG-21	R5571388
Interval			1	days		26-AUG-21	R5570588
Antimony (Sb)-Total	0.0000235		0.0000057	mg/dm2.day	26-AUG-21	27-AUG-21	R5571388
Arsenic (As)-Total	0.000215		0.0000057	mg/dm2.day	26-AUG-21	27-AUG-21	R5571388
Barium (Ba)-Total	0.00159		0.0000028	mg/dm2.day	26-AUG-21	27-AUG-21	R5571388
Beryllium (Be)-Total	<0.000028		0.000028	mg/dm2.day	26-AUG-21	27-AUG-21	R5571388
Bismuth (Bi)-Total	<0.000028		0.000028	mg/dm2.day	26-AUG-21	27-AUG-21	R5571388

* Refer to Referenced Information for Qualifiers (if any) and Methodology.

ALS ENVIRONMENTAL ANALYTICAL REPORT

Sample Details/Parameters	Result	Qualifier*	D.L.	Units	Extracted	Analyzed	Batch
L2623313-34 SPP1-DUSTFALL-32							
Sampled By: Client on 28-JUL-21							
Matrix: Dustfall							
Total Metals in Dustfalls by ICPMS							
Boron (B)-Total	0.00352		0.00057	mg/dm2.day	26-AUG-21	27-AUG-21	R5571388
Cadmium (Cd)-Total	0.0000832		0.0000028	mg/dm2.day	26-AUG-21	27-AUG-21	R5571388
Calcium (Ca)-Total	2.17		0.0011	mg/dm2.day	26-AUG-21	27-AUG-21	R5571388
Chromium (Cr)-Total	0.000348		0.000028	mg/dm2.day	26-AUG-21	27-AUG-21	R5571388
Cobalt (Co)-Total	0.0000839		0.0000057	mg/dm2.day	26-AUG-21	27-AUG-21	R5571388
Copper (Cu)-Total	0.0161		0.000028	mg/dm2.day	26-AUG-21	27-AUG-21	R5571388
Lead (Pb)-Total	0.000847		0.0000028	mg/dm2.day	26-AUG-21	27-AUG-21	R5571388
Iron (Fe)-Total	0.129		0.0017	mg/dm2.day	26-AUG-21	27-AUG-21	R5571388
Lithium (Li)-Total	<0.00028		0.00028	mg/dm2.day	26-AUG-21	27-AUG-21	R5571388
Magnesium (Mg)-Total	0.434		0.00028	mg/dm2.day	26-AUG-21	27-AUG-21	R5571388
Manganese (Mn)-Total	0.0103		0.0000057	mg/dm2.day	26-AUG-21	27-AUG-21	R5571388
Molybdenum (Mo)-Total	0.000305		0.0000028	mg/dm2.day	26-AUG-21	27-AUG-21	R5571388
Nickel (Ni)-Total	0.00206		0.000028	mg/dm2.day	26-AUG-21	27-AUG-21	R5571388
Phosphorus (P)-Total	4.32		0.0028	mg/dm2.day	26-AUG-21	27-AUG-21	R5571388
Potassium (K)-Total	5.75		0.0028	mg/dm2.day	26-AUG-21	27-AUG-21	R5571388
Selenium (Se)-Total	0.000363		0.000057	mg/dm2.day	26-AUG-21	27-AUG-21	R5571388
Silicon (Si)-Total	0.239		0.0028	mg/dm2.day	26-AUG-21	27-AUG-21	R5571388
Silver (Ag)-Total	0.0000302		0.00000057	mg/dm2.day	26-AUG-21	27-AUG-21	R5571388
Sodium (Na)-Total	0.848		0.0028	mg/dm2.day	26-AUG-21	27-AUG-21	R5571388
Strontium (Sr)-Total	0.00324		0.0000057	mg/dm2.day	26-AUG-21	27-AUG-21	R5571388
Thallium (Tl)-Total	<0.0000057		0.0000057	mg/dm2.day	26-AUG-21	27-AUG-21	R5571388
Tin (Sn)-Total	<0.0000057		0.0000057	mg/dm2.day	26-AUG-21	27-AUG-21	R5571388
Titanium (Ti)-Total	0.00065		0.00057	mg/dm2.day	26-AUG-21	27-AUG-21	R5571388
Uranium (U)-Total	0.00000597		0.00000057	mg/dm2.day	26-AUG-21	27-AUG-21	R5571388
Vanadium (V)-Total	0.000186		0.000057	mg/dm2.day	26-AUG-21	27-AUG-21	R5571388
Zinc (Zn)-Total	0.0676		0.00017	mg/dm2.day	26-AUG-21	27-AUG-21	R5571388
L2623313-35 DUSTFALL-GALLINGER ROAD							
Sampled By: Client on 29-JUL-21							
Matrix: Dustfall							
Dustfalls-Total, Soluble, Insoluble +FV							
Total Dustfall	0.66		0.10	mg/dm2.day		26-AUG-21	R5572363
Total Insoluble Dustfall	0.39		0.10	mg/dm2.day		26-AUG-21	R5572363
Total Soluble Dustfall	0.27		0.10	mg/dm2.day		26-AUG-21	R5572363
Fixed Dustfall	0.43		0.10	mg/dm2.day		26-AUG-21	R5572363
Fixed Insoluble Dustfall	0.32		0.10	mg/dm2.day		26-AUG-21	R5572363
Fixed Soluble Dustfall	0.11		0.10	mg/dm2.day		26-AUG-21	R5572363
Volatile Dustfall	0.23		0.10	mg/dm2.day		26-AUG-21	R5572363
Volatile Insoluble Dustfall	<0.10		0.10	mg/dm2.day		26-AUG-21	R5572363
Volatile Soluble Dustfall	0.17		0.10	mg/dm2.day		26-AUG-21	R5572363
Total Metals in Dustfalls by ICPMS							
Aluminum (Al)-Total	0.00235		0.0000491	mg/dm2.day	26-AUG-21	27-AUG-21	R5571388
Interval				days		26-AUG-21	R5570588
Antimony (Sb)-Total	0.0000020		0.0000016	mg/dm2.day	26-AUG-21	27-AUG-21	R5571388
Arsenic (As)-Total	0.0000027		0.0000016	mg/dm2.day	26-AUG-21	27-AUG-21	R5571388
Barium (Ba)-Total	0.0000486		0.00000081	mg/dm2.day	26-AUG-21	27-AUG-21	R5571388
Beryllium (Be)-Total	<0.0000081		0.0000081	mg/dm2.day	26-AUG-21	27-AUG-21	R5571388
Bismuth (Bi)-Total	<0.0000081		0.0000081	mg/dm2.day	26-AUG-21	27-AUG-21	R5571388
Boron (B)-Total	<0.00016		0.00016	mg/dm2.day	26-AUG-21	27-AUG-21	R5571388

* Refer to Referenced Information for Qualifiers (if any) and Methodology.

ALS ENVIRONMENTAL ANALYTICAL REPORT

Sample Details/Parameters	Result	Qualifier*	D.L.	Units	Extracted	Analyzed	Batch
L2623313-35 DUSTFALL-GALLINGER ROAD							
Sampled By: Client on 29-JUL-21							
Matrix: Dustfall							
Total Metals in Dustfalls by ICPMS							
Cadmium (Cd)-Total	<0.00000081		0.00000081	mg/dm2.day	26-AUG-21	27-AUG-21	R5571388
Calcium (Ca)-Total	0.0207		0.00032	mg/dm2.day	26-AUG-21	27-AUG-21	R5571388
Chromium (Cr)-Total	0.0000388		0.0000081	mg/dm2.day	26-AUG-21	27-AUG-21	R5571388
Cobalt (Co)-Total	0.0000027		0.0000016	mg/dm2.day	26-AUG-21	27-AUG-21	R5571388
Copper (Cu)-Total	0.0000642		0.0000081	mg/dm2.day	26-AUG-21	27-AUG-21	R5571388
Lead (Pb)-Total	0.00000446		0.00000081	mg/dm2.day	26-AUG-21	27-AUG-21	R5571388
Iron (Fe)-Total	0.00316		0.00049	mg/dm2.day	26-AUG-21	27-AUG-21	R5571388
Lithium (Li)-Total	<0.000081		0.000081	mg/dm2.day	26-AUG-21	27-AUG-21	R5571388
Magnesium (Mg)-Total	0.00646		0.000081	mg/dm2.day	26-AUG-21	27-AUG-21	R5571388
Manganese (Mn)-Total	0.000482		0.0000016	mg/dm2.day	26-AUG-21	27-AUG-21	R5571388
Molybdenum (Mo)-Total	0.00000144		0.00000081	mg/dm2.day	26-AUG-21	27-AUG-21	R5571388
Nickel (Ni)-Total	0.0000296		0.0000081	mg/dm2.day	26-AUG-21	27-AUG-21	R5571388
Phosphorus (P)-Total	0.0110		0.00081	mg/dm2.day	26-AUG-21	27-AUG-21	R5571388
Potassium (K)-Total	0.0174		0.00081	mg/dm2.day	26-AUG-21	27-AUG-21	R5571388
Selenium (Se)-Total	<0.000016		0.000016	mg/dm2.day	26-AUG-21	27-AUG-21	R5571388
Silicon (Si)-Total	0.00381		0.00081	mg/dm2.day	26-AUG-21	27-AUG-21	R5571388
Silver (Ag)-Total	<0.00000016		0.00000016	mg/dm2.day	26-AUG-21	27-AUG-21	R5571388
Sodium (Na)-Total	0.00314		0.00081	mg/dm2.day	26-AUG-21	27-AUG-21	R5571388
Strontium (Sr)-Total	0.0000515		0.0000016	mg/dm2.day	26-AUG-21	27-AUG-21	R5571388
Thallium (Tl)-Total	<0.0000016		0.0000016	mg/dm2.day	26-AUG-21	27-AUG-21	R5571388
Tin (Sn)-Total	<0.0000016		0.0000016	mg/dm2.day	26-AUG-21	27-AUG-21	R5571388
Titanium (Ti)-Total	<0.00016		0.00016	mg/dm2.day	26-AUG-21	27-AUG-21	R5571388
Uranium (U)-Total	<0.00000016		0.00000016	mg/dm2.day	26-AUG-21	27-AUG-21	R5571388
Vanadium (V)-Total	<0.000016		0.000016	mg/dm2.day	26-AUG-21	27-AUG-21	R5571388
Zinc (Zn)-Total	0.000239		0.000049	mg/dm2.day	26-AUG-21	27-AUG-21	R5571388
L2623313-36 DUSTFALL-TAIT ROAD (SOUTH)							
Sampled By: Client on 29-JUL-21							
Matrix: Dustfall							
Dustfalls-Total, Soluble, Insoluble +FV							
Total Dustfall	0.78		0.10	mg/dm2.day		26-AUG-21	R5572363
Total Insoluble Dustfall	0.40		0.10	mg/dm2.day		26-AUG-21	R5572363
Total Soluble Dustfall	0.38		0.10	mg/dm2.day		26-AUG-21	R5572363
Fixed Dustfall	0.47		0.10	mg/dm2.day		26-AUG-21	R5572363
Fixed Insoluble Dustfall	0.37		0.10	mg/dm2.day		26-AUG-21	R5572363
Fixed Soluble Dustfall	0.10		0.10	mg/dm2.day		26-AUG-21	R5572363
Volatile Dustfall	0.31		0.10	mg/dm2.day		26-AUG-21	R5572363
Volatile Insoluble Dustfall	<0.10		0.10	mg/dm2.day		26-AUG-21	R5572363
Volatile Soluble Dustfall	0.28		0.10	mg/dm2.day		26-AUG-21	R5572363
Total Metals in Dustfalls by ICPMS							
Aluminum (Al)-Total	0.00357		0.0000431	mg/dm2.day	26-AUG-21	27-AUG-21	R5571388
Interval				days		26-AUG-21	R5570588
Antimony (Sb)-Total	0.0000016		0.0000014	mg/dm2.day	26-AUG-21	27-AUG-21	R5571388
Arsenic (As)-Total	0.0000029		0.0000014	mg/dm2.day	26-AUG-21	27-AUG-21	R5571388
Barium (Ba)-Total	0.0000947		0.00000072	mg/dm2.day	26-AUG-21	27-AUG-21	R5571388
Beryllium (Be)-Total	<0.0000072		0.0000072	mg/dm2.day	26-AUG-21	27-AUG-21	R5571388
Bismuth (Bi)-Total	<0.0000072		0.0000072	mg/dm2.day	26-AUG-21	27-AUG-21	R5571388

* Refer to Referenced Information for Qualifiers (if any) and Methodology.

ALS ENVIRONMENTAL ANALYTICAL REPORT

Sample Details/Parameters	Result	Qualifier*	D.L.	Units	Extracted	Analyzed	Batch
L2623313-36 DUSTFALL-TAIT ROAD (SOUTH)							
Sampled By: Client on 29-JUL-21							
Matrix: Dustfall							
Total Metals in Dustfalls by ICPMS							
Boron (B)-Total	<0.00014		0.00014	mg/dm2.day	26-AUG-21	27-AUG-21	R5571388
Cadmium (Cd)-Total	<0.00000072		0.00000072	mg/dm2.day	26-AUG-21	27-AUG-21	R5571388
Calcium (Ca)-Total	0.0239		0.00029	mg/dm2.day	26-AUG-21	27-AUG-21	R5571388
Chromium (Cr)-Total	0.0000095		0.0000072	mg/dm2.day	26-AUG-21	27-AUG-21	R5571388
Cobalt (Co)-Total	0.0000041		0.0000014	mg/dm2.day	26-AUG-21	27-AUG-21	R5571388
Copper (Cu)-Total	0.0000637		0.0000072	mg/dm2.day	26-AUG-21	27-AUG-21	R5571388
Lead (Pb)-Total	0.0000124		0.00000072	mg/dm2.day	26-AUG-21	27-AUG-21	R5571388
Iron (Fe)-Total	0.00439		0.00043	mg/dm2.day	26-AUG-21	27-AUG-21	R5571388
Lithium (Li)-Total	<0.000072		0.000072	mg/dm2.day	26-AUG-21	27-AUG-21	R5571388
Magnesium (Mg)-Total	0.00549		0.000072	mg/dm2.day	26-AUG-21	27-AUG-21	R5571388
Manganese (Mn)-Total	0.000666		0.0000014	mg/dm2.day	26-AUG-21	27-AUG-21	R5571388
Molybdenum (Mo)-Total	<0.00000072		0.00000072	mg/dm2.day	26-AUG-21	27-AUG-21	R5571388
Nickel (Ni)-Total	0.0000439		0.0000072	mg/dm2.day	26-AUG-21	27-AUG-21	R5571388
Phosphorus (P)-Total	0.00290		0.00072	mg/dm2.day	26-AUG-21	27-AUG-21	R5571388
Potassium (K)-Total	0.00641		0.00072	mg/dm2.day	26-AUG-21	27-AUG-21	R5571388
Selenium (Se)-Total	<0.000014		0.000014	mg/dm2.day	26-AUG-21	27-AUG-21	R5571388
Silicon (Si)-Total	0.00520		0.00072	mg/dm2.day	26-AUG-21	27-AUG-21	R5571388
Silver (Ag)-Total	0.00000023		0.00000014	mg/dm2.day	26-AUG-21	27-AUG-21	R5571388
Sodium (Na)-Total	0.00190		0.00072	mg/dm2.day	26-AUG-21	27-AUG-21	R5571388
Strontium (Sr)-Total	0.0000874		0.0000014	mg/dm2.day	26-AUG-21	27-AUG-21	R5571388
Thallium (Tl)-Total	<0.0000014		0.0000014	mg/dm2.day	26-AUG-21	27-AUG-21	R5571388
Tin (Sn)-Total	<0.0000014		0.0000014	mg/dm2.day	26-AUG-21	27-AUG-21	R5571388
Titanium (Ti)-Total	<0.00014		0.00014	mg/dm2.day	26-AUG-21	27-AUG-21	R5571388
Uranium (U)-Total	<0.00000014		0.00000014	mg/dm2.day	26-AUG-21	27-AUG-21	R5571388
Vanadium (V)-Total	<0.000014		0.000014	mg/dm2.day	26-AUG-21	27-AUG-21	R5571388
Zinc (Zn)-Total	0.000199		0.000043	mg/dm2.day	26-AUG-21	27-AUG-21	R5571388
L2623313-37 DUSTFALL-NORTHWEST							
Sampled By: Client on 29-JUL-21							
Matrix: Dustfall							
Dustfalls-Total, Soluble, Insoluble +FV							
Total Dustfall	0.45		0.10	mg/dm2.day		26-AUG-21	R5572363
Total Insoluble Dustfall	0.17		0.10	mg/dm2.day		26-AUG-21	R5572363
Total Soluble Dustfall	0.27		0.10	mg/dm2.day		26-AUG-21	R5572363
Fixed Dustfall	0.22		0.10	mg/dm2.day		26-AUG-21	R5572363
Fixed Insoluble Dustfall	0.14		0.10	mg/dm2.day		26-AUG-21	R5572363
Fixed Soluble Dustfall	<0.10		0.10	mg/dm2.day		26-AUG-21	R5572363
Volatile Dustfall	0.23		0.10	mg/dm2.day		26-AUG-21	R5572363
Volatile Insoluble Dustfall	<0.10		0.10	mg/dm2.day		26-AUG-21	R5572363
Volatile Soluble Dustfall	0.19		0.10	mg/dm2.day		26-AUG-21	R5572363
Total Metals in Dustfalls by ICPMS							
Aluminum (Al)-Total	0.00137		0.0000431	mg/dm2.day	26-AUG-21	27-AUG-21	R5571388
Interval			1	days		26-AUG-21	R5570588
Antimony (Sb)-Total	<0.0000014		0.0000014	mg/dm2.day	26-AUG-21	27-AUG-21	R5571388
Arsenic (As)-Total	0.0000017		0.0000014	mg/dm2.day	26-AUG-21	27-AUG-21	R5571388
Barium (Ba)-Total	0.0000802		0.00000072	mg/dm2.day	26-AUG-21	27-AUG-21	R5571388
Beryllium (Be)-Total	<0.0000072		0.0000072	mg/dm2.day	26-AUG-21	27-AUG-21	R5571388

* Refer to Referenced Information for Qualifiers (if any) and Methodology.

ALS ENVIRONMENTAL ANALYTICAL REPORT

Sample Details/Parameters	Result	Qualifier*	D.L.	Units	Extracted	Analyzed	Batch
L2623313-37 DUSTFALL-NORTHWEST							
Sampled By: Client on 29-JUL-21							
Matrix: Dustfall							
Total Metals in Dustfalls by ICPMS							
Bismuth (Bi)-Total	<0.0000072		0.0000072	mg/dm2.day	26-AUG-21	27-AUG-21	R5571388
Boron (B)-Total	<0.00014		0.00014	mg/dm2.day	26-AUG-21	27-AUG-21	R5571388
Cadmium (Cd)-Total	<0.00000072		0.00000072	mg/dm2.day	26-AUG-21	27-AUG-21	R5571388
Calcium (Ca)-Total	0.0168		0.00029	mg/dm2.day	26-AUG-21	27-AUG-21	R5571388
Chromium (Cr)-Total	<0.0000072		0.0000072	mg/dm2.day	26-AUG-21	27-AUG-21	R5571388
Cobalt (Co)-Total	<0.0000014		0.0000014	mg/dm2.day	26-AUG-21	27-AUG-21	R5571388
Copper (Cu)-Total	0.0000434		0.0000072	mg/dm2.day	26-AUG-21	27-AUG-21	R5571388
Lead (Pb)-Total	0.00000426		0.00000072	mg/dm2.day	26-AUG-21	27-AUG-21	R5571388
Iron (Fe)-Total	0.00157		0.00043	mg/dm2.day	26-AUG-21	27-AUG-21	R5571388
Lithium (Li)-Total	<0.000072		0.000072	mg/dm2.day	26-AUG-21	27-AUG-21	R5571388
Magnesium (Mg)-Total	0.00408		0.000072	mg/dm2.day	26-AUG-21	27-AUG-21	R5571388
Manganese (Mn)-Total	0.000478		0.0000014	mg/dm2.day	26-AUG-21	27-AUG-21	R5571388
Molybdenum (Mo)-Total	<0.00000072		0.00000072	mg/dm2.day	26-AUG-21	27-AUG-21	R5571388
Nickel (Ni)-Total	0.0000190		0.0000072	mg/dm2.day	26-AUG-21	27-AUG-21	R5571388
Phosphorus (P)-Total	0.00193		0.00072	mg/dm2.day	26-AUG-21	27-AUG-21	R5571388
Potassium (K)-Total	0.00383		0.00072	mg/dm2.day	26-AUG-21	27-AUG-21	R5571388
Selenium (Se)-Total	<0.000014		0.000014	mg/dm2.day	26-AUG-21	27-AUG-21	R5571388
Silicon (Si)-Total	0.00181		0.00072	mg/dm2.day	26-AUG-21	27-AUG-21	R5571388
Silver (Ag)-Total	<0.00000014		0.00000014	mg/dm2.day	26-AUG-21	27-AUG-21	R5571388
Sodium (Na)-Total	0.00125		0.00072	mg/dm2.day	26-AUG-21	27-AUG-21	R5571388
Strontium (Sr)-Total	0.0000502		0.0000014	mg/dm2.day	26-AUG-21	27-AUG-21	R5571388
Thallium (Tl)-Total	<0.0000014		0.0000014	mg/dm2.day	26-AUG-21	27-AUG-21	R5571388
Tin (Sn)-Total	<0.0000014		0.0000014	mg/dm2.day	26-AUG-21	27-AUG-21	R5571388
Titanium (Ti)-Total	<0.00014		0.00014	mg/dm2.day	26-AUG-21	27-AUG-21	R5571388
Uranium (U)-Total	<0.00000014		0.00000014	mg/dm2.day	26-AUG-21	27-AUG-21	R5571388
Vanadium (V)-Total	<0.000014		0.000014	mg/dm2.day	26-AUG-21	27-AUG-21	R5571388
Zinc (Zn)-Total	0.000137		0.000043	mg/dm2.day	26-AUG-21	27-AUG-21	R5571388

* Refer to Referenced Information for Qualifiers (if any) and Methodology.

Reference Information

Test Method References:

ALS Test Code	Matrix	Test Description	Method Reference**
AIR VOLUME-HIVOL-BU	Filter	Air volume (m3)	USEPA IO3.1
AIR VOLUME-M212 F-BU	Filter	Air volume (m3)	EPA QA Guidance Document 2.12
DUSTFALLS-ALL-DM2-VA	Dustfall	Dustfalls-Total, Soluble, Insoluble +FV	BC LAB MANUAL - PARTICULATE

This analysis is carried out using procedures modified from British Columbia Environmental Manual "Particulate."
Particulates or "Dustfalls" are determined gravimetrically. Total Insoluble and Soluble Dustfalls are determined by filtering a sample through a 0.45 um membrane filter and drying the filter and filtrate at 104 C, followed by ignition at 550 C. The remaining residue after 550 C represents the fixed portion and the weight lost on ignition represents the volatile portion. The sum of all fixed and volatile portions on both Insoluble and Soluble portions represents Total Dustfalls.

MET+IC/SOLID-CALC-BU	Filter	Metals + Anions + Cations / Solids Ratio	Calculation
MET-DUST(DM2)-MS-VA	Dustfall	Total Metals in Dustfalls by ICPMS	EPA 6020A

This analysis is carried out using procedures adapted from "Standard Methods for the Examination of Water and Wastewater" published by the American Public Health Association, and with procedures adapted from "Test Methods for Evaluating Solid Waste" SW-846 published by the United States Environmental Protection Agency (EPA). Instrumental analysis is by inductively coupled plasma - mass spectrometry (EPA Method 6020A).

MET-IO3.5-MS-BU	Filter	Metals on High Volume Filter by ICPMS	IO3.5

After weighing (if required), hivol filters are sub-sampled and leached with nitric acid to extract available metal analytes. After dilution, the extracts are submitted to the ICPMS instrument for analysis.

PART-HIVOL-GRAV-BU	Filter	Particulate on High Volume Filter	USEPA IO3.1
PART-M212 F-GRAV-BU	Filter	PM via Gravimetric Analysis	EPA QA Guidance Document 2.12

The particulate matter collected onto tare-weighed 47mm Teflon Disc filter media is desiccated then brought to a constant weight on an analytical balance. Results are presented in ug (per filter). An air volume can be included to allow for reporting in ug/m3.

** ALS test methods may incorporate modifications from specified reference methods to improve performance.

The last two letters of the above test code(s) indicate the laboratory that performed analytical analysis for that test. Refer to the list below:

Laboratory Definition Code	Laboratory Location
BU	ALS ENVIRONMENTAL - BURLINGTON, ONTARIO, CANADA
VA	ALS ENVIRONMENTAL - VANCOUVER, BRITISH COLUMBIA, CANADA

Chain of Custody Numbers:

GLOSSARY OF REPORT TERMS

Surrogates are compounds that are similar in behaviour to target analyte(s), but that do not normally occur in environmental samples. For applicable tests, surrogates are added to samples prior to analysis as a check on recovery. In reports that display the D.L. column, laboratory objectives for surrogates are listed there.
mg/kg - milligrams per kilogram based on dry weight of sample
mg/kg wwt - milligrams per kilogram based on wet weight of sample
mg/kg lwt - milligrams per kilogram based on lipid-adjusted weight
mg/L - unit of concentration based on volume, parts per million.
< - Less than.
D.L. - The reporting limit.
N/A - Result not available. Refer to qualifier code and definition for explanation.

Test results reported relate only to the samples as received by the laboratory.
UNLESS OTHERWISE STATED, ALL SAMPLES WERE RECEIVED IN ACCEPTABLE CONDITION.
Analytical results in unsigned test reports with the DRAFT watermark are subject to change, pending final QC review.

Quality Control Report

Workorder: L2623313 Report Date: 01-SEP-21

Client: New Gold Inc. Rainy River Project
5967 Highway 11/71 P.O. Box 5
Emo ON P0W 1E0

Contact: Sarah Flesher

Test	Matrix	Reference	Result	Qualifier	Units	RPD	Limit	Analyzed
MET-IO3.5-MS-BU	**Filter**							
Batch R5566876								
WG3602709-3 DUP		**L2623313-1**						
Arsenic (As)		<3.0	<3.0	RPD-NA	ug	N/A	20	20-AUG-21
Cadmium (Cd)		<2.0	<2.0	RPD-NA	ug	N/A	20	20-AUG-21
Cobalt (Co)		<2.0	<2.0	RPD-NA	ug	N/A	20	20-AUG-21
Chromium (Cr)		<5.0	<5.0	RPD-NA	ug	N/A	20	20-AUG-21
Copper (Cu)		82.4	99.0		ug	18	20	20-AUG-21
Iron (Fe)		738	927		ug	23	25	20-AUG-21
Manganese (Mn)		23.4	28.5		ug	20	20	20-AUG-21
Nickel (Ni)		<3.0	<3.0	RPD-NA	ug	N/A	20	20-AUG-21
Lead (Pb)		<3.0	<3.0	RPD-NA	ug	N/A	20	20-AUG-21
Selenium (Se)		<10	<10	RPD-NA	ug	N/A	20	20-AUG-21
Vanadium (V)		<5.0	<5.0	RPD-NA	ug	N/A	20	20-AUG-21
Zinc (Zn)		16.2	18.9		ug	15	20	20-AUG-21
WG3602709-2 LCS								
Arsenic (As)			102.0		%		80-120	20-AUG-21
Cadmium (Cd)			104.2		%		80-120	20-AUG-21
Cobalt (Co)			105.0		%		80-120	20-AUG-21
Chromium (Cr)			105.0		%		80-120	20-AUG-21
Copper (Cu)			107.0		%		80-120	20-AUG-21
Iron (Fe)			102.0		%		80-120	20-AUG-21
Manganese (Mn)			101.0		%		80-120	20-AUG-21
Nickel (Ni)			102.0		%		80-120	20-AUG-21
Lead (Pb)			100.0		%		80-120	20-AUG-21
Selenium (Se)			104.0		%		80-120	20-AUG-21
Vanadium (V)			102.0		%		80-120	20-AUG-21
Zinc (Zn)			104.5		%		80-120	20-AUG-21
WG3602709-1 MB								
Arsenic (As)			<3.0		ug		3	20-AUG-21
Cadmium (Cd)			<0.027		ug		0.027	20-AUG-21
Cobalt (Co)			<0.030		ug		0.03	20-AUG-21
Chromium (Cr)			<3.4		ug		3.4	20-AUG-21
Copper (Cu)			<1.0		ug		1	20-AUG-21
Iron (Fe)			<12		ug		12	20-AUG-21
Manganese (Mn)			<0.45		ug		0.45	20-AUG-21
Nickel (Ni)			<0.25		ug		0.25	20-AUG-21
Lead (Pb)			<0.12		ug		0.12	20-AUG-21

Quality Control Report

Test	Matrix	Reference	Result	Qualifier	Units	RPD	Limit	Analyzed
MET-IO3.5-MS-BU	**Filter**							
Batch R5566876								
WG3602709-1 MB								
Selenium (Se)			<1.3		ug		1.25	20-AUG-21
Vanadium (V)			<5.0		ug		10	20-AUG-21
Zinc (Zn)			<4.5		ug		4.5	20-AUG-21
WG3602709-4 MS		**L2623313-1**						
Arsenic (As)			101.8		%		75-125	20-AUG-21
Cadmium (Cd)			103.7		%		75-125	20-AUG-21
Cobalt (Co)			103.2		%		75-125	20-AUG-21
Chromium (Cr)			104.6		%		75-125	20-AUG-21
Copper (Cu)			N/A	MS-B	%		-	20-AUG-21
Iron (Fe)			N/A	MS-B	%		-	20-AUG-21
Manganese (Mn)			123.0		%		75-125	20-AUG-21
Nickel (Ni)			99.2		%		75-125	20-AUG-21
Lead (Pb)			103.5		%		75-125	20-AUG-21
Selenium (Se)			99.8		%		75-125	20-AUG-21
Vanadium (V)			100.4		%		75-125	20-AUG-21
Zinc (Zn)			108.5		%		75-125	20-AUG-21
PART-HIVOL-GRAV-BU	**Filter**							
Batch R5556305								
WG3599552-3 DUP		**L2623313-1**						
Total particulate		51000	51500		ug	1.0	5	12-AUG-21
WG3599552-1 MB								
Total particulate			<100		ug		100	12-AUG-21
PART-M212 F-GRAV-BU	**Filter**							
Batch R5569989								
WG3604995-3 DUP		**L2623313-14**						
Total particulate		43	36	J	ug	7	30	25-AUG-21
WG3604995-1 MB								
Total particulate			<15		ug		15	25-AUG-21
WG3604995-2 MB								
Total particulate			<15		ug		15	25-AUG-21
DUSTFALLS-ALL-DM2-VA	**Dustfall**							
Batch R5572363								
WG3605373-1 MB								
Total Dustfall			<0.10		mg/dm2.day		0.1	26-AUG-21
Total Insoluble Dustfall			<0.10		mg/dm2.day		0.1	26-AUG-21

Quality Control Report

Test	Matrix	Reference	Result	Qualifier	Units	RPD	Limit	Analyzed
DUSTFALLS-ALL-DM2-VA	**Dustfall**							
Batch R5572363								
WG3605373-1 MB								
Total Soluble Dustfall			<0.10		mg/dm2.day		0.1	26-AUG-21
Fixed Dustfall			<0.10		mg/dm2.day		0.1	26-AUG-21
Fixed Insoluble Dustfall			<0.10		mg/dm2.day		0.1	26-AUG-21
Fixed Soluble Dustfall			<0.10		mg/dm2.day		0.1	26-AUG-21
Volatile Dustfall			<0.10		mg/dm2.day		0.1	26-AUG-21
Volatile Insoluble Dustfall			<0.10		mg/dm2.day		0.1	26-AUG-21
Volatile Soluble Dustfall			<0.10		mg/dm2.day		0.1	26-AUG-21
MET-DUST(DM2)-MS-VA	**Dustfall**							
Batch R5571388								
WG3604839-2 LCS								
Aluminum (Al)-Total			89.0		%		80-120	27-AUG-21
Antimony (Sb)-Total			102.2		%		80-120	27-AUG-21
Arsenic (As)-Total			101.0		%		80-120	27-AUG-21
Barium (Ba)-Total			100.3		%		80-120	27-AUG-21
Beryllium (Be)-Total			105.0		%		80-120	27-AUG-21
Bismuth (Bi)-Total			85.9		%		80-120	27-AUG-21
Boron (B)-Total			97.2		%		80-120	27-AUG-21
Cadmium (Cd)-Total			103.6		%		80-120	27-AUG-21
Calcium (Ca)-Total			96.2		%		80-120	27-AUG-21
Chromium (Cr)-Total			97.8		%		80-120	27-AUG-21
Cobalt (Co)-Total			98.3		%		80-120	27-AUG-21
Copper (Cu)-Total			95.2		%		80-120	27-AUG-21
Lead (Pb)-Total			97.1		%		80-120	27-AUG-21
Iron (Fe)-Total			92.0		%		80-120	27-AUG-21
Lithium (Li)-Total			95.2		%		80-120	27-AUG-21
Magnesium (Mg)-Total			98.3		%		80-120	27-AUG-21
Manganese (Mn)-Total			92.2		%		80-120	27-AUG-21
Molybdenum (Mo)-Total			91.4		%		80-120	27-AUG-21
Nickel (Ni)-Total			95.4		%		80-120	27-AUG-21
Phosphorus (P)-Total			113.2		%		80-120	27-AUG-21
Potassium (K)-Total			92.3		%		80-120	27-AUG-21
Selenium (Se)-Total			119.6		%		80-120	27-AUG-21
Silicon (Si)-Total			96.3		%		80-120	27-AUG-21
Silver (Ag)-Total			95.4		%		80-120	27-AUG-21

Quality Control Report

Test	Matrix	Reference	Result	Qualifier	Units	RPD	Limit	Analyzed
MET-DUST(DM2)-MS-VA	**Dustfall**							
Batch R5571388								
WG3604839-2 LCS								
Sodium (Na)-Total			96.2		%		80-120	27-AUG-21
Strontium (Sr)-Total			94.4		%		80-120	27-AUG-21
Thallium (Tl)-Total			93.0		%		80-120	27-AUG-21
Tin (Sn)-Total			91.2		%		80-120	27-AUG-21
Titanium (Ti)-Total			96.9		%		80-120	27-AUG-21
Uranium (U)-Total			99.98		%		80-120	27-AUG-21
Vanadium (V)-Total			99.1		%		80-120	27-AUG-21
Zinc (Zn)-Total			111.8		%		80-120	27-AUG-21
WG3604839-1 MB								
Aluminum (Al)-Total			<0.000079		mg/dm2.day		0.000079	27-AUG-21
Antimony (Sb)-Total			<0.0000026		mg/dm2.day		0.0000026	27-AUG-21
Arsenic (As)-Total			<0.0000026		mg/dm2.day		0.0000026	27-AUG-21
Barium (Ba)-Total			<0.0000013		mg/dm2.day		0.0000013	27-AUG-21
Beryllium (Be)-Total			<0.000013		mg/dm2.day		0.000013	27-AUG-21
Bismuth (Bi)-Total			<0.000013		mg/dm2.day		0.000013	27-AUG-21
Boron (B)-Total			<0.00026		mg/dm2.day		0.00026	27-AUG-21
Cadmium (Cd)-Total			<0.0000013		mg/dm2.day		0.0000013	27-AUG-21
Calcium (Ca)-Total			<0.00052		mg/dm2.day		0.00052	27-AUG-21
Chromium (Cr)-Total			<0.000013		mg/dm2.day		0.000013	27-AUG-21
Cobalt (Co)-Total			<0.0000026		mg/dm2.day		0.0000026	27-AUG-21
Copper (Cu)-Total			<0.000013		mg/dm2.day		0.000013	27-AUG-21
Lead (Pb)-Total			<0.0000013		mg/dm2.day		0.0000013	27-AUG-21
Iron (Fe)-Total			<0.00079		mg/dm2.day		0.00079	27-AUG-21
Lithium (Li)-Total			<0.00013		mg/dm2.day		0.00013	27-AUG-21
Magnesium (Mg)-Total			<0.00013		mg/dm2.day		0.00013	27-AUG-21
Manganese (Mn)-Total			<0.0000026		mg/dm2.day		0.0000026	27-AUG-21
Molybdenum (Mo)-Total			<0.0000013		mg/dm2.day		0.0000013	27-AUG-21
Nickel (Ni)-Total			<0.000013		mg/dm2.day		0.000013	27-AUG-21
Phosphorus (P)-Total			<0.0013		mg/dm2.day		0.0013	27-AUG-21
Potassium (K)-Total			<0.0013		mg/dm2.day		0.0013	27-AUG-21
Selenium (Se)-Total			<0.000026		mg/dm2.day		0.000026	27-AUG-21
Silicon (Si)-Total			<0.0013		mg/dm2.day		0.0013	27-AUG-21
Silver (Ag)-Total			<0.0000002		mg/dm2.day		0.00000026	27-AUG-21
Sodium (Na)-Total			<0.0013		mg/dm2.day		0.0013	27-AUG-21

Quality Control Report

Test	Matrix	Reference	Result	Qualifier	Units	RPD	Limit	Analyzed
MET-DUST(DM2)-MS-VA	**Dustfall**							
Batch R5571388								
WG3604839-1 MB								
Strontium (Sr)-Total			<0.0000026		mg/dm2.day		0.0000026	27-AUG-21
Thallium (Tl)-Total			<0.0000026		mg/dm2.day		0.0000026	27-AUG-21
Tin (Sn)-Total			<0.0000026		mg/dm2.day		0.0000026	27-AUG-21
Titanium (Ti)-Total			<0.00026		mg/dm2.day		0.00026	27-AUG-21
Uranium (U)-Total			<0.0000002		mg/dm2.day		0.00000026	27-AUG-21
Vanadium (V)-Total			<0.000026		mg/dm2.day		0.000026	27-AUG-21
Zinc (Zn)-Total			<0.000079		mg/dm2.day		0.000079	27-AUG-21
Batch R5573109								
WG3607475-3 DUP		**L2623313-27**						
Antimony (Sb)-Total		0.0000078	0.0000084	J	mg/dm2.day	0.000001	0.0000036	31-AUG-21
Arsenic (As)-Total		0.0000255	0.0000325	DUP-H	mg/dm2.day	24	20	31-AUG-21
Beryllium (Be)-Total		<0.0000090	<0.0000090	RPD-NA	mg/dm2.day	N/A	20	31-AUG-21
Bismuth (Bi)-Total		<0.0000090	<0.0000090	RPD-NA	mg/dm2.day	N/A	20	31-AUG-21
Boron (B)-Total		<0.00018	<0.00018	RPD-NA	mg/dm2.day	N/A	20	31-AUG-21
Calcium (Ca)-Total		0.168	0.200		mg/dm2.day	3.9	20	31-AUG-21
Chromium (Cr)-Total		0.0000357	0.0000462	J	mg/dm2.day	0.000010	0.000018	31-AUG-21
Cobalt (Co)-Total		0.0000162	0.0000147	J	mg/dm2.day	0.000003	0.0000036	31-AUG-21
Copper (Cu)-Total		0.000237	0.000226		mg/dm2.day	16	20	31-AUG-21
Lithium (Li)-Total		<0.000090	<0.000090	RPD-NA	mg/dm2.day	N/A	20	31-AUG-21
Magnesium (Mg)-Total		0.0467	0.0452		mg/dm2.day	11	20	31-AUG-21
Manganese (Mn)-Total		0.00381	0.00410		mg/dm2.day	7.0	20	31-AUG-21
Molybdenum (Mo)-Total		0.00000514	0.00000426	J	mg/dm2.day	0.000000	0.0000018	31-AUG-21
Nickel (Ni)-Total		0.0000572	0.0000522	J	mg/dm2.day	0.000011	0.000018	31-AUG-21
Phosphorus (P)-Total		0.0510	0.0551		mg/dm2.day	7.1	20	31-AUG-21
Potassium (K)-Total		0.0773	0.0939		mg/dm2.day	4.9	20	31-AUG-21
Selenium (Se)-Total		<0.000018	<0.000018	RPD-NA	mg/dm2.day	N/A	20	31-AUG-21
Sodium (Na)-Total		0.00761	0.00771		mg/dm2.day	14	20	31-AUG-21
Strontium (Sr)-Total		0.000316	0.000328		mg/dm2.day	8.8	20	31-AUG-21
Thallium (Tl)-Total		<0.0000018	<0.0000018	RPD-NA	mg/dm2.day	N/A	20	31-AUG-21
Tin (Sn)-Total		<0.0000018	<0.0000018	RPD-NA	mg/dm2.day	N/A	20	31-AUG-21
Titanium (Ti)-Total		0.00079	0.00079	J	mg/dm2.day	0.00024	0.00036	31-AUG-21
Uranium (U)-Total		0.00000107	0.00000092		mg/dm2.day	12	20	31-AUG-21
Vanadium (V)-Total		0.000061	0.000059	J	mg/dm2.day	0.000014	0.000036	31-AUG-21
WG3607475-2 LCS								

Quality Control Report

Test	Matrix	Reference	Result	Qualifier	Units	RPD	Limit	Analyzed
MET-DUST(DM2)-MS-VA	**Dustfall**							
Batch R5573109								
WG3607475-2 LCS								
Aluminum (Al)-Total			109.2		%		80-120	31-AUG-21
Antimony (Sb)-Total			104.0		%		80-120	31-AUG-21
Arsenic (As)-Total			105.1		%		80-120	31-AUG-21
Barium (Ba)-Total			102.2		%		80-120	31-AUG-21
Beryllium (Be)-Total			103.2		%		80-120	31-AUG-21
Bismuth (Bi)-Total			102.7		%		80-120	31-AUG-21
Boron (B)-Total			94.7		%		80-120	31-AUG-21
Cadmium (Cd)-Total			102.4		%		80-120	31-AUG-21
Calcium (Ca)-Total			102.3		%		80-120	31-AUG-21
Chromium (Cr)-Total			101.1		%		80-120	31-AUG-21
Cobalt (Co)-Total			105.7		%		80-120	31-AUG-21
Copper (Cu)-Total			104.5		%		80-120	31-AUG-21
Lead (Pb)-Total			104.0		%		80-120	31-AUG-21
Iron (Fe)-Total			106.0		%		80-120	31-AUG-21
Lithium (Li)-Total			99.4		%		80-120	31-AUG-21
Magnesium (Mg)-Total			99.97		%		80-120	31-AUG-21
Manganese (Mn)-Total			101.7		%		80-120	31-AUG-21
Molybdenum (Mo)-Total			104.4		%		80-120	31-AUG-21
Nickel (Ni)-Total			102.0		%		80-120	31-AUG-21
Phosphorus (P)-Total			105.5		%		80-120	31-AUG-21
Potassium (K)-Total			110.4		%		80-120	31-AUG-21
Selenium (Se)-Total			106.9		%		80-120	31-AUG-21
Silicon (Si)-Total			107.6		%		80-120	31-AUG-21
Silver (Ag)-Total			100.4		%		80-120	31-AUG-21
Sodium (Na)-Total			109.3		%		80-120	31-AUG-21
Strontium (Sr)-Total			101.2		%		80-120	31-AUG-21
Thallium (Tl)-Total			99.2		%		80-120	31-AUG-21
Tin (Sn)-Total			102.1		%		80-120	31-AUG-21
Titanium (Ti)-Total			102.1		%		80-120	31-AUG-21
Uranium (U)-Total			102.7		%		80-120	31-AUG-21
Vanadium (V)-Total			104.9		%		80-120	31-AUG-21
Zinc (Zn)-Total			98.2		%		80-120	31-AUG-21
WG3607475-1 MB								
Aluminum (Al)-Total			<0.000079		mg/dm2.day		0.000079	31-AUG-21

Quality Control Report

Test	Matrix	Reference	Result	Qualifier	Units	RPD	Limit	Analyzed
MET-DUST(DM2)-MS-VA	**Dustfall**							
Batch R5573109								
WG3607475-1 MB								
Antimony (Sb)-Total			<0.0000026		mg/dm2.day		0.0000026	31-AUG-21
Arsenic (As)-Total			<0.0000026		mg/dm2.day		0.0000026	31-AUG-21
Barium (Ba)-Total			<0.0000013		mg/dm2.day		0.0000013	31-AUG-21
Beryllium (Be)-Total			<0.000013		mg/dm2.day		0.000013	31-AUG-21
Bismuth (Bi)-Total			<0.000013		mg/dm2.day		0.000013	31-AUG-21
Boron (B)-Total			<0.00026		mg/dm2.day		0.00026	31-AUG-21
Cadmium (Cd)-Total			<0.0000013		mg/dm2.day		0.0000013	31-AUG-21
Calcium (Ca)-Total			<0.00052		mg/dm2.day		0.00052	31-AUG-21
Chromium (Cr)-Total			<0.000013		mg/dm2.day		0.000013	31-AUG-21
Cobalt (Co)-Total			<0.0000026		mg/dm2.day		0.0000026	31-AUG-21
Copper (Cu)-Total			<0.000013		mg/dm2.day		0.000013	31-AUG-21
Lead (Pb)-Total			<0.0000013		mg/dm2.day		0.0000013	31-AUG-21
Iron (Fe)-Total			<0.00079		mg/dm2.day		0.00079	31-AUG-21
Lithium (Li)-Total			<0.00013		mg/dm2.day		0.00013	31-AUG-21
Magnesium (Mg)-Total			<0.00013		mg/dm2.day		0.00013	31-AUG-21
Manganese (Mn)-Total			<0.0000026		mg/dm2.day		0.0000026	31-AUG-21
Nickel (Ni)-Total			<0.000013		mg/dm2.day		0.000013	31-AUG-21
Phosphorus (P)-Total			<0.0013		mg/dm2.day		0.0013	31-AUG-21
Potassium (K)-Total			<0.0013		mg/dm2.day		0.0013	31-AUG-21
Selenium (Se)-Total			<0.000026		mg/dm2.day		0.000026	31-AUG-21
Silicon (Si)-Total			<0.0013		mg/dm2.day		0.0013	31-AUG-21
Silver (Ag)-Total			<0.0000002		mg/dm2.day		0.00000026	31-AUG-21
Sodium (Na)-Total			<0.0013		mg/dm2.day		0.0013	31-AUG-21
Strontium (Sr)-Total			<0.0000026		mg/dm2.day		0.0000026	31-AUG-21
Thallium (Tl)-Total			<0.0000026		mg/dm2.day		0.0000026	31-AUG-21
Tin (Sn)-Total			<0.0000026		mg/dm2.day		0.0000026	31-AUG-21
Titanium (Ti)-Total			<0.00026		mg/dm2.day		0.00026	31-AUG-21
Uranium (U)-Total			<0.0000002		mg/dm2.day		0.00000026	31-AUG-21
Vanadium (V)-Total			<0.000026		mg/dm2.day		0.000026	31-AUG-21
Zinc (Zn)-Total			<0.000079		mg/dm2.day		0.000079	31-AUG-21

Quality Control Report

Legend:

Limit	ALS Control Limit (Data Quality Objectives)
DUP	Duplicate
RPD	Relative Percent Difference
N/A	Not Available
LCS	Laboratory Control Sample
SRM	Standard Reference Material
MS	Matrix Spike
MSD	Matrix Spike Duplicate
ADE	Average Desorption Efficiency
MB	Method Blank
IRM	Internal Reference Material
CRM	Certified Reference Material
CCV	Continuing Calibration Verification
CVS	Calibration Verification Standard
LCSD	Laboratory Control Sample Duplicate

Sample Parameter Qualifier Definitions:

Qualifier	Description
DUP-H	Duplicate results outside ALS DQO, due to sample heterogeneity.
J	Duplicate results and limits are expressed in terms of absolute difference.
MS-B	Matrix Spike recovery could not be accurately calculated due to high analyte background in sample.
RPD-NA	Relative Percent Difference Not Available due to result(s) being less than detection limit.

Hold Time Exceedances:

All test results reported with this submission were conducted within ALS recommended hold times.

ALS recommended hold times may vary by province. They are assigned to meet known provincial and/or federal government requirements. In the absence of regulatory hold times, ALS establishes recommendations based on guidelines published by the US EPA, APHA Standard Methods, or Environment Canada (where available). For more information, please contact ALS.

The ALS Quality Control Report is provided to ALS clients upon request. ALS includes comprehensive QC checks with every analysis to ensure our high standards of quality are met. Each QC result has a known or expected target value, which is compared against pre-determined data quality objectives to provide confidence in the accuracy of associated test results.

Please note that this report may contain QC results from anonymous Sample Duplicates and Matrix Spikes that do not originate from this Work Order.

ALS Environmental

Chain of Custody / Analytical Request Form
1435 Norjohn Court, Unit 1, Burlington, Ontario, Canada, L7L 0E6
Tel +1-905-331-3111 Fax +1-905-331-4567 www.alsglobal.com

Report To		Report Format / Distribution		Service Requested
Company:	New Gold Inc.	☑ Standard ☐ Other:		☑ Regular Service
Contact:	Sarah Flesher	☑ PDF ☑ Excel ☐ Digital ☐ Fax		☐ Rush Service (with prior consultation) - surcharge applies
Address:	24 Marr Rd. Barwick ON P0W 1A0	Email 1:	sarah.flesher@newgold.com	☐ Other - Please contact ALS
Phone:	807-234-8200 ext. 8049 Fax:	Email 2:		
Invoice To	Same as Report ? ☑ Yes ☐ No	Client / Project Information		
Company:		Job #:	Air Quality	
Contact:		Location:		
Address:		PO:	450000093	
Phone:	Fax:	Sampled by:		
Lab Work Order #		ALS Contact:		

Analysis Request

Sample #	Sample Identification (This description will appear on the report)	Date (dd-mmm-yy)	Time (hh:mm)	Sample Type	TSP and Metals	Pm 2.5	Dustfall Incl. volatile								Hazardous? Provide Det	Highly Contaminated?	Number of Containers
	SOUTH-TSP-372 1	9-Jul-2021	12:00	Air	X												
	SOUTH-TSP-373 2	15-Jul-2021	12:00	Air	X												
	SOUTH-TSP-374 3	21-Jul-2021	12:00	Air	X												
	SOUTH-TSP-375 4	27-Jul-2021	12:00	Air	X												
	NORTH-TSP-372 5	9-Jul-2021	12:00	Air	X												
	NORTH-TSP-373 6	15-Jul-2021	12:00	Air	X												
	NORTH-TSP-374 7	21-Jul-2021	12:00	Air	X												
	NORTH-TSP-375 8	27-Jul-2021	12:00	Air	X												
	NORTHWEST-TSP-372 9	9-Jul-2021	12:00	Air	X												
	NORTHWEST-TSP-373 10	15-Jul-2021	12:00	Air	X												
	NORTHWEST-TSP-374 11	21-Jul-2021	12:00	Air	X												
	NORTHWEST-TSP-375 12	27-Jul-2021	12:00	Air	X												
	SOUTH-PM2.5-372 14	9-Jul-2021	12:00	Air		X											
	SOUTH-PM2.5-373 15	15-Jul-2021	12:00	Air		X											
	SOUTH-PM2.5-374 16	21-Jul-2021	12:00	Air		X											
	SOUTH-PM2.5-375 17	27-Jul-2021	12:00	Air		X											
	NORTH-PM2.5-372 18	9-Jul-2021	12:00	Air		X											
	NORTH-PM2.5-373 19	15-Jul-2021	12:00	Air		X											
	NORTH-PM2.5-374 20	21-Jul-2021	12:00	Air		X											
	NORTH-PM2.5-375 21	27-Jul-2021	12:00	Air		X											
	NORTHWEST-PM2.5-372 22	9-Jul-2021	12:00	Air		X											
	NORTHWEST-PM2.5-373 23	15-Jul-2021	12:00	Air		X											
	NORTHWEST-PM2.5-374 24	21-Jul-2021	12:00	Air		X											
	NORTHWEST-PM2.5-375 25	27-Jul-2021	12:00	Air		X											
	Travel Blank TSP 13	30-Jul-2021	12:00	Air	X												
	Travel Blank PM2.5 26	30-Jul-2021	12:00	Air		X											
	NOP1-Dustfall-7 27	29-Jul-2021	12:00	Air			X										
	CP1-Dustfall-7 28	29-Jul-2021	12:00	Air			X										
	WCP1-Dustfall-7 29	29-Jul-2021	12:00	Air			X										
	GH1-Dustfall-7 30	29-Jul-2021	12:00	Air			X										
	SPP1-Dustfall-29 31	7-Jul-2021	12:00	Air			X										
	SPP1-Dustfall-30 32	14-Jul-2021	12:00	Air			X										
	SPP1-Dustfall-31 33	21-Jul-2021	12:00	Air			X										
	SPP1-Dustfall-32 34	28-Jul-2021	12:00	Air			X										
	Dustfall - Gallinger Road 35	29-Jul-2021	12:00	Air			X										
	Dustfall - Tait Road (South) 36	29-Jul-2021	12:00	Air			X										
	Dustfall- Northwest 37	29-Jul-2021	12:00	Air			X										

Special Instructions / Regulations / Hazardous Details

Please Note: Dustfall canisters are empty/ only partially full, please follow-through with sample analysis

By the use of this form the user acknowledges and agrees with the Terms and Conditions as provided by ALS

Released by:	Date (dd-mmm-yy)	Time (hh-mm)	Received by:	Date:	Time:	Temperature:	Verified by:	Date:	Time:	Observations Yes / No ? If Yes add SIF
	30-Jul-2021	15:30	Barran Burton	2021-Aug 5	15:15	24.0 °C				

L2623313-COFC

[redacted]

New Gold Inc. Rainy River Project
ATTN: Sarah Flesher
5967 Highway 11/71
P.O. Box 5
Emo ON P0W 1E0

Date Received: 09-SEP-21
Report Date: 05-OCT-21 14:01 (MT)
Version: FINAL

Client Phone: 807-234-8200

Certificate of Analysis

Lab Work Order #: L2637534
Project P.O. #: 4500050093
Job Reference:
C of C Numbers:
Legal Site Desc:

[redacted]

[This report shall not be reproduced except in full without the written authority of the Laboratory.]

ADDRESS: 1435 Norjohn Court, Unit 1, Burlington, ON, L7L 0E6 Canada | Phone: +1 905 331 3111 | Fax: +1 905 331 4567

[redacted]

ALS ENVIRONMENTAL ANALYTICAL REPORT

Sample Details/Parameters	Result	Qualifier*	D.L.	Units	Extracted	Analyzed	Batch
L2637534-1 SOUTH-TSP-376							
Sampled By: Client on 02-AUG-21							
Matrix: Hi Vol Filter							
Miscellaneous Parameters							
Total particulate	130000		2300	ug		21-SEP-21	R5589238
Metals on High Volume Filter by ICPMS							
Arsenic (As)	<3.0		3.0	ug	21-SEP-21	22-SEP-21	R5593137
Cadmium (Cd)	<2.0		2.0	ug	21-SEP-21	22-SEP-21	R5593137
Cobalt (Co)	<2.0		2.0	ug	21-SEP-21	22-SEP-21	R5593137
Chromium (Cr)	<5.0		5.0	ug	21-SEP-21	22-SEP-21	R5593137
Copper (Cu)	126		4.0	ug	21-SEP-21	22-SEP-21	R5593137
Iron (Fe)	1500		20	ug	21-SEP-21	22-SEP-21	R5593137
Manganese (Mn)	59.9		1.0	ug	21-SEP-21	22-SEP-21	R5593137
Nickel (Ni)	<3.0		3.0	ug	21-SEP-21	22-SEP-21	R5593137
Lead (Pb)	<3.0		3.0	ug	21-SEP-21	22-SEP-21	R5593137
Selenium (Se)	<10		10	ug	21-SEP-21	22-SEP-21	R5593137
Vanadium (V)	<5.0		5.0	ug	21-SEP-21	22-SEP-21	R5593137
Zinc (Zn)	33.3		5.0	ug	21-SEP-21	22-SEP-21	R5593137
L2637534-2 SOUTH-TSP-377							
Sampled By: Client on 08-AUG-21							
Matrix: Hi Vol Filter							
Miscellaneous Parameters							
Total particulate	38700		2300	ug		21-SEP-21	R5589238
Metals on High Volume Filter by ICPMS							
Arsenic (As)	<3.0		3.0	ug	21-SEP-21	22-SEP-21	R5593137
Cadmium (Cd)	<2.0		2.0	ug	21-SEP-21	22-SEP-21	R5593137
Cobalt (Co)	<2.0		2.0	ug	21-SEP-21	22-SEP-21	R5593137
Chromium (Cr)	<5.0		5.0	ug	21-SEP-21	22-SEP-21	R5593137
Copper (Cu)	73.8		4.0	ug	21-SEP-21	22-SEP-21	R5593137
Iron (Fe)	603		20	ug	21-SEP-21	22-SEP-21	R5593137
Manganese (Mn)	15.3		1.0	ug	21-SEP-21	22-SEP-21	R5593137
Nickel (Ni)	<3.0		3.0	ug	21-SEP-21	22-SEP-21	R5593137
Lead (Pb)	<3.0		3.0	ug	21-SEP-21	22-SEP-21	R5593137
Selenium (Se)	<10		10	ug	21-SEP-21	22-SEP-21	R5593137
Vanadium (V)	<5.0		5.0	ug	21-SEP-21	22-SEP-21	R5593137
Zinc (Zn)	13.1		5.0	ug	21-SEP-21	22-SEP-21	R5593137
L2637534-3 SOUTH-TSP-378							
Sampled By: Client on 14-AUG-21							
Matrix: Hi Vol Filter							
Miscellaneous Parameters							
Total particulate	63400		2300	ug		21-SEP-21	R5589238
Metals on High Volume Filter by ICPMS							
Arsenic (As)	<3.0		3.0	ug	21-SEP-21	22-SEP-21	R5593137
Cadmium (Cd)	<2.0		2.0	ug	21-SEP-21	22-SEP-21	R5593137
Cobalt (Co)	<2.0		2.0	ug	21-SEP-21	22-SEP-21	R5593137
Chromium (Cr)	<5.0		5.0	ug	21-SEP-21	22-SEP-21	R5593137
Copper (Cu)	146		4.0	ug	21-SEP-21	22-SEP-21	R5593137
Iron (Fe)	1300		20	ug	21-SEP-21	22-SEP-21	R5593137
Manganese (Mn)	54.0		1.0	ug	21-SEP-21	22-SEP-21	R5593137
Nickel (Ni)	<3.0		3.0	ug	21-SEP-21	22-SEP-21	R5593137
Lead (Pb)	<3.0		3.0	ug	21-SEP-21	22-SEP-21	R5593137
Selenium (Se)	<10		10	ug	21-SEP-21	22-SEP-21	R5593137
Vanadium (V)	<5.0		5.0	ug	21-SEP-21	22-SEP-21	R5593137
Zinc (Zn)	13.6		5.0	ug	21-SEP-21	22-SEP-21	R5593137

* Refer to Referenced Information for Qualifiers (if any) and Methodology.

ALS ENVIRONMENTAL ANALYTICAL REPORT

Sample Details/Parameters	Result	Qualifier*	D.L.	Units	Extracted	Analyzed	Batch
L2637534-4 SOUTH-TSP-379							
Sampled By: Client on 20-AUG-21							
Matrix: Hi Vol Filter							
Miscellaneous Parameters							
Total particulate	46500		2300	ug		21-SEP-21	R5589238
Metals on High Volume Filter by ICPMS							
Arsenic (As)	<3.0		3.0	ug	21-SEP-21	22-SEP-21	R5593137
Cadmium (Cd)	<2.0		2.0	ug	21-SEP-21	22-SEP-21	R5593137
Cobalt (Co)	<2.0		2.0	ug	21-SEP-21	22-SEP-21	R5593137
Chromium (Cr)	<5.0		5.0	ug	21-SEP-21	22-SEP-21	R5593137
Copper (Cu)	56.7		4.0	ug	21-SEP-21	22-SEP-21	R5593137
Iron (Fe)	743		20	ug	21-SEP-21	22-SEP-21	R5593137
Manganese (Mn)	20.8		1.0	ug	21-SEP-21	22-SEP-21	R5593137
Nickel (Ni)	<3.0		3.0	ug	21-SEP-21	22-SEP-21	R5593137
Lead (Pb)	<3.0		3.0	ug	21-SEP-21	22-SEP-21	R5593137
Selenium (Se)	<10		10	ug	21-SEP-21	22-SEP-21	R5593137
Vanadium (V)	<5.0		5.0	ug	21-SEP-21	22-SEP-21	R5593137
Zinc (Zn)	15.8		5.0	ug	21-SEP-21	22-SEP-21	R5593137
L2637534-5 SOUTH-TSP-380							
Sampled By: Client on 26-AUG-21							
Matrix: Hi Vol Filter							
Miscellaneous Parameters							
Total particulate	68300		2300	ug		21-SEP-21	R5589238
Metals on High Volume Filter by ICPMS							
Arsenic (As)	<3.0		3.0	ug	21-SEP-21	22-SEP-21	R5593137
Cadmium (Cd)	<2.0		2.0	ug	21-SEP-21	22-SEP-21	R5593137
Cobalt (Co)	<2.0		2.0	ug	21-SEP-21	22-SEP-21	R5593137
Chromium (Cr)	<5.0		5.0	ug	21-SEP-21	22-SEP-21	R5593137
Copper (Cu)	76.5		4.0	ug	21-SEP-21	22-SEP-21	R5593137
Iron (Fe)	837		20	ug	21-SEP-21	22-SEP-21	R5593137
Manganese (Mn)	25.8		1.0	ug	21-SEP-21	22-SEP-21	R5593137
Nickel (Ni)	<3.0		3.0	ug	21-SEP-21	22-SEP-21	R5593137
Lead (Pb)	<3.0		3.0	ug	21-SEP-21	22-SEP-21	R5593137
Selenium (Se)	<10		10	ug	21-SEP-21	22-SEP-21	R5593137
Vanadium (V)	<5.0		5.0	ug	21-SEP-21	22-SEP-21	R5593137
Zinc (Zn)	27.9		5.0	ug	21-SEP-21	22-SEP-21	R5593137
L2637534-6 NORTH-TSP-376							
Sampled By: Client on 02-AUG-21							
Matrix: Hi Vol Filter							
Miscellaneous Parameters							
Total particulate	147000		2300	ug		21-SEP-21	R5589238
Metals on High Volume Filter by ICPMS							
Arsenic (As)	<3.0		3.0	ug	21-SEP-21	22-SEP-21	R5593137
Cadmium (Cd)	<2.0		2.0	ug	21-SEP-21	22-SEP-21	R5593137
Cobalt (Co)	<2.0		2.0	ug	21-SEP-21	22-SEP-21	R5593137
Chromium (Cr)	<5.0		5.0	ug	21-SEP-21	22-SEP-21	R5593137
Copper (Cu)	161		4.0	ug	21-SEP-21	22-SEP-21	R5593137
Iron (Fe)	1410		20	ug	21-SEP-21	22-SEP-21	R5593137
Manganese (Mn)	66.2		1.0	ug	21-SEP-21	22-SEP-21	R5593137
Nickel (Ni)	<3.0		3.0	ug	21-SEP-21	22-SEP-21	R5593137
Lead (Pb)	9.0		3.0	ug	21-SEP-21	22-SEP-21	R5593137
Selenium (Se)	<10		10	ug	21-SEP-21	22-SEP-21	R5593137
Vanadium (V)	<5.0		5.0	ug	21-SEP-21	22-SEP-21	R5593137
Zinc (Zn)	59.9		5.0	ug	21-SEP-21	22-SEP-21	R5593137

* Refer to Referenced Information for Qualifiers (if any) and Methodology.

ALS ENVIRONMENTAL ANALYTICAL REPORT

Sample Details/Parameters	Result	Qualifier*	D.L.	Units	Extracted	Analyzed	Batch
L2637534-7 NORTH-TSP-377							
Sampled By: Client on 08-AUG-21							
Matrix: Hi Vol Filter							
Miscellaneous Parameters							
Total particulate	30900		2300	ug		21-SEP-21	R5589238
Metals on High Volume Filter by ICPMS							
Arsenic (As)	<3.0		3.0	ug	21-SEP-21	22-SEP-21	R5593137
Cadmium (Cd)	<2.0		2.0	ug	21-SEP-21	22-SEP-21	R5593137
Cobalt (Co)	<2.0		2.0	ug	21-SEP-21	22-SEP-21	R5593137
Chromium (Cr)	<5.0		5.0	ug	21-SEP-21	22-SEP-21	R5593137
Copper (Cu)	192		4.0	ug	21-SEP-21	22-SEP-21	R5593137
Iron (Fe)	364		20	ug	21-SEP-21	22-SEP-21	R5593137
Manganese (Mn)	10.9		1.0	ug	21-SEP-21	22-SEP-21	R5593137
Nickel (Ni)	<3.0		3.0	ug	21-SEP-21	22-SEP-21	R5593137
Lead (Pb)	<3.0		3.0	ug	21-SEP-21	22-SEP-21	R5593137
Selenium (Se)	<10		10	ug	21-SEP-21	22-SEP-21	R5593137
Vanadium (V)	<5.0		5.0	ug	21-SEP-21	22-SEP-21	R5593137
Zinc (Zn)	11.9		5.0	ug	21-SEP-21	22-SEP-21	R5593137
L2637534-8 NORTH-TSP-378							
Sampled By: Client on 14-AUG-21							
Matrix: Hi Vol Filter							
Miscellaneous Parameters							
Total particulate	81800		2300	ug		21-SEP-21	R5589238
Metals on High Volume Filter by ICPMS							
Arsenic (As)	<3.0		3.0	ug	21-SEP-21	22-SEP-21	R5593137
Cadmium (Cd)	<2.0		2.0	ug	21-SEP-21	22-SEP-21	R5593137
Cobalt (Co)	<2.0		2.0	ug	21-SEP-21	22-SEP-21	R5593137
Chromium (Cr)	<5.0		5.0	ug	21-SEP-21	22-SEP-21	R5593137
Copper (Cu)	105		4.0	ug	21-SEP-21	22-SEP-21	R5593137
Iron (Fe)	1480		20	ug	21-SEP-21	22-SEP-21	R5593137
Manganese (Mn)	46.8		1.0	ug	21-SEP-21	22-SEP-21	R5593137
Nickel (Ni)	<3.0		3.0	ug	21-SEP-21	22-SEP-21	R5593137
Lead (Pb)	<3.0		3.0	ug	21-SEP-21	22-SEP-21	R5593137
Selenium (Se)	<10		10	ug	21-SEP-21	22-SEP-21	R5593137
Vanadium (V)	<5.0		5.0	ug	21-SEP-21	22-SEP-21	R5593137
Zinc (Zn)	17.3		5.0	ug	21-SEP-21	22-SEP-21	R5593137
L2637534-9 NORTH-TSP-379							
Sampled By: Client on 20-AUG-21							
Matrix: Hi Vol Filter							
Miscellaneous Parameters							
Total particulate	92000		2300	ug		21-SEP-21	R5589238
Metals on High Volume Filter by ICPMS							
Arsenic (As)	<3.0		3.0	ug	21-SEP-21	22-SEP-21	R5593137
Cadmium (Cd)	<2.0		2.0	ug	21-SEP-21	22-SEP-21	R5593137
Cobalt (Co)	<2.0		2.0	ug	21-SEP-21	22-SEP-21	R5593137
Chromium (Cr)	<5.0		5.0	ug	21-SEP-21	22-SEP-21	R5593137
Copper (Cu)	102		4.0	ug	21-SEP-21	22-SEP-21	R5593137
Iron (Fe)	1610		20	ug	21-SEP-21	22-SEP-21	R5593137
Manganese (Mn)	45.9		1.0	ug	21-SEP-21	22-SEP-21	R5593137
Nickel (Ni)	<3.0		3.0	ug	21-SEP-21	22-SEP-21	R5593137
Lead (Pb)	<3.0		3.0	ug	21-SEP-21	22-SEP-21	R5593137
Selenium (Se)	<10		10	ug	21-SEP-21	22-SEP-21	R5593137
Vanadium (V)	<5.0		5.0	ug	21-SEP-21	22-SEP-21	R5593137
Zinc (Zn)	30.6		5.0	ug	21-SEP-21	22-SEP-21	R5593137

* Refer to Referenced Information for Qualifiers (if any) and Methodology.

ALS ENVIRONMENTAL ANALYTICAL REPORT

Sample Details/Parameters	Result	Qualifier*	D.L.	Units	Extracted	Analyzed	Batch
L2637534-10 NORTH-TSP-380							
Sampled By: Client on 26-AUG-21							
Matrix: Hi Vol Filter							
Miscellaneous Parameters							
Total particulate	19400		2300	ug		21-SEP-21	R5589238
Metals on High Volume Filter by ICPMS							
Arsenic (As)	<3.0		3.0	ug	21-SEP-21	22-SEP-21	R5593137
Cadmium (Cd)	<2.0		2.0	ug	21-SEP-21	22-SEP-21	R5593137
Cobalt (Co)	<2.0		2.0	ug	21-SEP-21	22-SEP-21	R5593137
Chromium (Cr)	<5.0		5.0	ug	21-SEP-21	22-SEP-21	R5593137
Copper (Cu)	73.4		4.0	ug	21-SEP-21	22-SEP-21	R5593137
Iron (Fe)	143		20	ug	21-SEP-21	22-SEP-21	R5593137
Manganese (Mn)	5.4		1.0	ug	21-SEP-21	22-SEP-21	R5593137
Nickel (Ni)	<3.0		3.0	ug	21-SEP-21	22-SEP-21	R5593137
Lead (Pb)	<3.0		3.0	ug	21-SEP-21	22-SEP-21	R5593137
Selenium (Se)	<10		10	ug	21-SEP-21	22-SEP-21	R5593137
Vanadium (V)	<5.0		5.0	ug	21-SEP-21	22-SEP-21	R5593137
Zinc (Zn)	9.2		5.0	ug	21-SEP-21	22-SEP-21	R5593137
L2637534-11 NORTHWEST-TSP-376							
Sampled By: Client on 02-AUG-21							
Matrix: Hi Vol Filter							
Miscellaneous Parameters							
Total particulate	97500		2300	ug		21-SEP-21	R5589238
Metals on High Volume Filter by ICPMS							
Arsenic (As)	<3.0		3.0	ug	21-SEP-21	22-SEP-21	R5593137
Cadmium (Cd)	<2.0		2.0	ug	21-SEP-21	22-SEP-21	R5593137
Cobalt (Co)	<2.0		2.0	ug	21-SEP-21	22-SEP-21	R5593137
Chromium (Cr)	<5.0		5.0	ug	21-SEP-21	22-SEP-21	R5593137
Copper (Cu)	205		4.0	ug	21-SEP-21	22-SEP-21	R5593137
Iron (Fe)	343		20	ug	21-SEP-21	22-SEP-21	R5593137
Manganese (Mn)	32.0		1.0	ug	21-SEP-21	22-SEP-21	R5593137
Nickel (Ni)	<3.0		3.0	ug	21-SEP-21	22-SEP-21	R5593137
Lead (Pb)	<3.0		3.0	ug	21-SEP-21	22-SEP-21	R5593137
Selenium (Se)	<10		10	ug	21-SEP-21	22-SEP-21	R5593137
Vanadium (V)	<5.0		5.0	ug	21-SEP-21	22-SEP-21	R5593137
Zinc (Zn)	20.9		5.0	ug	21-SEP-21	22-SEP-21	R5593137
L2637534-12 NORTHWEST-TSP-377							
Sampled By: Client on 08-AUG-21							
Matrix: Hi Vol Filter							
Miscellaneous Parameters							
Total particulate	41500		2300	ug		21-SEP-21	R5589238
Metals on High Volume Filter by ICPMS							
Arsenic (As)	<3.0		3.0	ug	21-SEP-21	22-SEP-21	R5593137
Cadmium (Cd)	<2.0		2.0	ug	21-SEP-21	22-SEP-21	R5593137
Cobalt (Co)	<2.0		2.0	ug	21-SEP-21	22-SEP-21	R5593137
Chromium (Cr)	<5.0		5.0	ug	21-SEP-21	22-SEP-21	R5593137
Copper (Cu)	137		4.0	ug	21-SEP-21	22-SEP-21	R5593137
Iron (Fe)	418		20	ug	21-SEP-21	22-SEP-21	R5593137
Manganese (Mn)	12.5		1.0	ug	21-SEP-21	22-SEP-21	R5593137
Nickel (Ni)	<3.0		3.0	ug	21-SEP-21	22-SEP-21	R5593137
Lead (Pb)	<3.0		3.0	ug	21-SEP-21	22-SEP-21	R5593137
Selenium (Se)	<10		10	ug	21-SEP-21	22-SEP-21	R5593137
Vanadium (V)	<5.0		5.0	ug	21-SEP-21	22-SEP-21	R5593137
Zinc (Zn)	12.0		5.0	ug	21-SEP-21	22-SEP-21	R5593137

* Refer to Referenced Information for Qualifiers (if any) and Methodology.

ALS ENVIRONMENTAL ANALYTICAL REPORT

Sample Details/Parameters	Result	Qualifier*	D.L.	Units	Extracted	Analyzed	Batch
L2637534-13 NORTHWEST-TSP-378							
Sampled By: Client on 14-AUG-21							
Matrix: Hi Vol Filter							
Miscellaneous Parameters							
Total particulate	48800		2300	ug		21-SEP-21	R5589238
Metals on High Volume Filter by ICPMS							
Arsenic (As)	<3.0		3.0	ug	21-SEP-21	22-SEP-21	R5593137
Cadmium (Cd)	<2.0		2.0	ug	21-SEP-21	22-SEP-21	R5593137
Cobalt (Co)	<2.0		2.0	ug	21-SEP-21	22-SEP-21	R5593137
Chromium (Cr)	<5.0		5.0	ug	21-SEP-21	22-SEP-21	R5593137
Copper (Cu)	427		4.0	ug	21-SEP-21	22-SEP-21	R5593137
Iron (Fe)	837		20	ug	21-SEP-21	22-SEP-21	R5593137
Manganese (Mn)	33.9		1.0	ug	21-SEP-21	22-SEP-21	R5593137
Nickel (Ni)	<3.0		3.0	ug	21-SEP-21	22-SEP-21	R5593137
Lead (Pb)	<3.0		3.0	ug	21-SEP-21	22-SEP-21	R5593137
Selenium (Se)	<10		10	ug	21-SEP-21	22-SEP-21	R5593137
Vanadium (V)	<5.0		5.0	ug	21-SEP-21	22-SEP-21	R5593137
Zinc (Zn)	29.8		5.0	ug	21-SEP-21	22-SEP-21	R5593137
L2637534-14 NORTHWEST-TSP-379							
Sampled By: Client on 20-AUG-21							
Matrix: Hi Vol Filter							
Miscellaneous Parameters							
Total particulate	48500		2300	ug		21-SEP-21	R5589238
Metals on High Volume Filter by ICPMS							
Arsenic (As)	<3.0		3.0	ug	21-SEP-21	22-SEP-21	R5593137
Cadmium (Cd)	<2.0		2.0	ug	21-SEP-21	22-SEP-21	R5593137
Cobalt (Co)	<2.0		2.0	ug	21-SEP-21	22-SEP-21	R5593137
Chromium (Cr)	<5.0		5.0	ug	21-SEP-21	22-SEP-21	R5593137
Copper (Cu)	269		4.0	ug	21-SEP-21	22-SEP-21	R5593137
Iron (Fe)	900		20	ug	21-SEP-21	22-SEP-21	R5593137
Manganese (Mn)	27.4		1.0	ug	21-SEP-21	22-SEP-21	R5593137
Nickel (Ni)	<3.0		3.0	ug	21-SEP-21	22-SEP-21	R5593137
Lead (Pb)	<3.0		3.0	ug	21-SEP-21	22-SEP-21	R5593137
Selenium (Se)	<10		10	ug	21-SEP-21	22-SEP-21	R5593137
Vanadium (V)	<5.0		5.0	ug	21-SEP-21	22-SEP-21	R5593137
Zinc (Zn)	21.8		5.0	ug	21-SEP-21	22-SEP-21	R5593137
L2637534-15 NORTHWEST-TSP-380							
Sampled By: Client on 26-AUG-21							
Matrix: Hi Vol Filter							
Miscellaneous Parameters							
Total particulate	63900		2300	ug		21-SEP-21	R5589238
Metals on High Volume Filter by ICPMS							
Arsenic (As)	<3.0		3.0	ug	21-SEP-21	22-SEP-21	R5593137
Cadmium (Cd)	<2.0		2.0	ug	21-SEP-21	22-SEP-21	R5593137
Cobalt (Co)	<2.0		2.0	ug	21-SEP-21	22-SEP-21	R5593137
Chromium (Cr)	<5.0		5.0	ug	21-SEP-21	22-SEP-21	R5593137
Copper (Cu)	202		4.0	ug	21-SEP-21	22-SEP-21	R5593137
Iron (Fe)	1110		20	ug	21-SEP-21	22-SEP-21	R5593137
Manganese (Mn)	27.2		1.0	ug	21-SEP-21	22-SEP-21	R5593137
Nickel (Ni)	<3.0		3.0	ug	21-SEP-21	22-SEP-21	R5593137
Lead (Pb)	<3.0		3.0	ug	21-SEP-21	22-SEP-21	R5593137
Selenium (Se)	<10		10	ug	21-SEP-21	22-SEP-21	R5593137
Vanadium (V)	<5.0		5.0	ug	21-SEP-21	22-SEP-21	R5593137
Zinc (Zn)	16.9		5.0	ug	21-SEP-21	22-SEP-21	R5593137

* Refer to Referenced Information for Qualifiers (if any) and Methodology.

ALS ENVIRONMENTAL ANALYTICAL REPORT

Sample Details/Parameters	Result	Qualifier*	D.L.	Units	Extracted	Analyzed	Batch
L2637534-16 SOUTH-PM2.5-376							
Sampled By: Client on 02-AUG-21							
Matrix: 47mm Filter							
Miscellaneous Parameters							
Total particulate	2410		15	ug		26-SEP-21	R5604330
L2637534-17 SOUTH-PM2.5-377							
Sampled By: Client on 08-AUG-21							
Matrix: 47mm Filter							
Miscellaneous Parameters							
Total particulate	186		15	ug		26-SEP-21	R5604330
L2637534-18 SOUTH-PM2.5-378							
Sampled By: Client on 14-AUG-21							
Matrix: 47mm Filter							
Miscellaneous Parameters							
Total particulate	88		15	ug		26-SEP-21	R5604330
L2637534-19 SOUTH-PM2.5-379							
Sampled By: Client on 20-AUG-21							
Matrix: 47mm Filter							
Miscellaneous Parameters							
Total particulate	216		15	ug		26-SEP-21	R5604330
L2637534-20 SOUTH-PM2.5-380							
Sampled By: Client on 26-AUG-21							
Matrix: 47mm Filter							
Miscellaneous Parameters							
Total particulate	59		15	ug		26-SEP-21	R5604330
L2637534-21 NORTH-PM2.5-376							
Sampled By: Client on 02-AUG-21							
Matrix: 47mm Filter							
Miscellaneous Parameters							
Total particulate	975		15	ug		26-SEP-21	R5604330
L2637534-22 NORTH-PM2.5-377							
Sampled By: Client on 08-AUG-21							
Matrix: 47mm Filter							
Miscellaneous Parameters							
Total particulate	215		15	ug		26-SEP-21	R5604330
L2637534-23 NORTH-PM2.5-378							
Sampled By: Client on 14-AUG-21							
Matrix: 47mm Filter							
Miscellaneous Parameters							
Total particulate	177		15	ug		26-SEP-21	R5604330
L2637534-24 NORTH-PM2.5-379							
Sampled By: Client on 20-AUG-21							
Matrix: 47mm Filter							
Miscellaneous Parameters							
Total particulate	152		15	ug		26-SEP-21	R5604330
L2637534-25 NORTH-PM2.5-380							
Sampled By: Client on 26-AUG-21							
Matrix: 47mm Filter							
Miscellaneous Parameters							
Total particulate	79		15	ug		26-SEP-21	R5604330

* Refer to Referenced Information for Qualifiers (if any) and Methodology.

ALS ENVIRONMENTAL ANALYTICAL REPORT

Sample Details/Parameters	Result	Qualifier*	D.L.	Units	Extracted	Analyzed	Batch
L2637534-26 NORTHWEST-PM2.5-376							
Sampled By: Client on 02-AUG-21							
Matrix: 47mm Filter							
Miscellaneous Parameters							
Total particulate	890		15	ug		26-SEP-21	R5604330
L2637534-27 NORTHWEST-PM2.5-377							
Sampled By: Client on 08-AUG-21							
Matrix: 47mm Filter							
Miscellaneous Parameters							
Total particulate	236		15	ug		26-SEP-21	R5604330
L2637534-28 NORTHWEST-PM2.5-378							
Sampled By: Client on 14-AUG-21							
Matrix: 47mm Filter							
Miscellaneous Parameters							
Total particulate	65		15	ug		26-SEP-21	R5604330
L2637534-29 NORTHWEST-PM2.5-379							
Sampled By: Client on 20-AUG-21							
Matrix: 47mm Filter							
Miscellaneous Parameters							
Total particulate	155		15	ug		26-SEP-21	R5604330
L2637534-30 NORTHWEST-PM2.5-380							
Sampled By: Client on 26-AUG-21							
Matrix: 47mm Filter							
Miscellaneous Parameters							
Total particulate	72		15	ug		26-SEP-21	R5604330
L2637534-31 NOP1-DUSTFALL-8							
Sampled By: Client on 31-AUG-21							
Matrix: Dustfall							
Dustfalls-Total, Soluble, Insoluble +FV							
Total Dustfall	4.01		0.10	mg/dm2.day		04-OCT-21	R5608639
Total Insoluble Dustfall	3.10		0.10	mg/dm2.day		04-OCT-21	R5608639
Total Soluble Dustfall	0.90		0.10	mg/dm2.day		04-OCT-21	R5608639
Fixed Dustfall	3.11		0.10	mg/dm2.day		04-OCT-21	R5608639
Fixed Insoluble Dustfall	2.97		0.10	mg/dm2.day		04-OCT-21	R5608639
Fixed Soluble Dustfall	0.13		0.10	mg/dm2.day		04-OCT-21	R5608639
Volatile Dustfall	0.90		0.10	mg/dm2.day		04-OCT-21	R5608639
Volatile Insoluble Dustfall	0.13		0.10	mg/dm2.day		04-OCT-21	R5608639
Volatile Soluble Dustfall	0.77		0.10	mg/dm2.day		04-OCT-21	R5608639
Total Metals in Dustfalls by ICPMS							
Aluminum (Al)-Total	0.0419		0.000038	mg/dm2.day	29-SEP-21	29-SEP-21	R5605664
Interval			1	days		29-SEP-21	R5604166
Antimony (Sb)-Total	0.0000058		0.0000013	mg/dm2.day	29-SEP-21	29-SEP-21	R5605664
Arsenic (As)-Total	0.0000274		0.0000013	mg/dm2.day	29-SEP-21	29-SEP-21	R5605664
Barium (Ba)-Total	0.000175		0.0000006 3	mg/dm2.day	29-SEP-21	29-SEP-21	R5605664
Beryllium (Be)-Total	<0.0000063		0.0000063	mg/dm2.day	29-SEP-21	29-SEP-21	R5605664
Bismuth (Bi)-Total	0.0000066		0.0000063	mg/dm2.day	29-SEP-21	29-SEP-21	R5605664
Boron (B)-Total	<0.00013		0.00013	mg/dm2.day	29-SEP-21	29-SEP-21	R5605664
Cadmium (Cd)-Total	0.00000676		0.0000006 3	mg/dm2.day	29-SEP-21	29-SEP-21	R5605664
Calcium (Ca)-Total	0.102		0.00025	mg/dm2.day	29-SEP-21	29-SEP-21	R5605664
Chromium (Cr)-Total	0.0000478		0.0000063	mg/dm2.day	29-SEP-21	29-SEP-21	R5605664
Cobalt (Co)-Total	0.0000104		0.0000013	mg/dm2.day	29-SEP-21	29-SEP-21	R5605664

* Refer to Referenced Information for Qualifiers (if any) and Methodology.

ALS ENVIRONMENTAL ANALYTICAL REPORT

Sample Details/Parameters	Result	Qualifier*	D.L.	Units	Extracted	Analyzed	Batch
L2637534-31 NOP1-DUSTFALL-8							
Sampled By: Client on 31-AUG-21							
Matrix: Dustfall							
Total Metals in Dustfalls by ICPMS							
Copper (Cu)-Total	0.000195		0.0000063	mg/dm2.day	29-SEP-21	29-SEP-21	R5605664
Lead (Pb)-Total	0.000301		0.00000063	mg/dm2.day	29-SEP-21	29-SEP-21	R5605664
Iron (Fe)-Total	0.0324		0.00038	mg/dm2.day	29-SEP-21	29-SEP-21	R5605664
Lithium (Li)-Total	<0.000063		0.000063	mg/dm2.day	29-SEP-21	29-SEP-21	R5605664
Magnesium (Mg)-Total	0.0245		0.000063	mg/dm2.day	29-SEP-21	29-SEP-21	R5605664
Manganese (Mn)-Total	0.00224		0.0000013	mg/dm2.day	29-SEP-21	29-SEP-21	R5605664
Molybdenum (Mo)-Total	0.00000434		0.00000063	mg/dm2.day	29-SEP-21	29-SEP-21	R5605664
Nickel (Ni)-Total	0.0000356		0.0000063	mg/dm2.day	29-SEP-21	29-SEP-21	R5605664
Phosphorus (P)-Total	0.00249		0.00063	mg/dm2.day	29-SEP-21	29-SEP-21	R5605664
Potassium (K)-Total	0.0119		0.00063	mg/dm2.day	29-SEP-21	29-SEP-21	R5605664
Selenium (Se)-Total	<0.000013		0.000013	mg/dm2.day	29-SEP-21	29-SEP-21	R5605664
Silicon (Si)-Total	0.0537		0.00063	mg/dm2.day	29-SEP-21	29-SEP-21	R5605664
Silver (Ag)-Total	0.00000727		0.00000013	mg/dm2.day	29-SEP-21	29-SEP-21	R5605664
Sodium (Na)-Total	0.00543		0.00063	mg/dm2.day	29-SEP-21	29-SEP-21	R5605664
Strontium (Sr)-Total	0.000242		0.0000013	mg/dm2.day	29-SEP-21	29-SEP-21	R5605664
Thallium (Tl)-Total	<0.0000013		0.0000013	mg/dm2.day	29-SEP-21	29-SEP-21	R5605664
Tin (Sn)-Total	<0.0000013		0.0000013	mg/dm2.day	29-SEP-21	29-SEP-21	R5605664
Titanium (Ti)-Total	0.00074		0.00013	mg/dm2.day	29-SEP-21	29-SEP-21	R5605664
Uranium (U)-Total	0.00000078		0.00000013	mg/dm2.day	29-SEP-21	29-SEP-21	R5605664
Vanadium (V)-Total	0.000048		0.000013	mg/dm2.day	29-SEP-21	29-SEP-21	R5605664
Zinc (Zn)-Total	0.00171		0.000038	mg/dm2.day	29-SEP-21	29-SEP-21	R5605664
L2637534-32 CP1-DUSTFALL-8							
Sampled By: Client on 31-AUG-21							
Matrix: Dustfall							
Dustfalls-Total, Soluble, Insoluble +FV							
Total Dustfall	17.2		0.10	mg/dm2.day		04-OCT-21	R5608639
Total Insoluble Dustfall	7.54		0.10	mg/dm2.day		04-OCT-21	R5608639
Total Soluble Dustfall	9.61		0.10	mg/dm2.day		04-OCT-21	R5608639
Fixed Dustfall	6.04		0.10	mg/dm2.day		04-OCT-21	R5608639
Fixed Insoluble Dustfall	1.01		0.10	mg/dm2.day		04-OCT-21	R5608639
Fixed Soluble Dustfall	5.02		0.10	mg/dm2.day		04-OCT-21	R5608639
Volatile Dustfall	11.1		0.10	mg/dm2.day		04-OCT-21	R5608639
Volatile Insoluble Dustfall	6.53		0.10	mg/dm2.day		04-OCT-21	R5608639
Volatile Soluble Dustfall	4.59		0.10	mg/dm2.day		04-OCT-21	R5608639
Total Metals in Dustfalls by ICPMS							
Aluminum (Al)-Total	0.0103		0.0000441	mg/dm2.day	29-SEP-21	29-SEP-21	R5605664
Interval				days		29-SEP-21	R5604166
Antimony (Sb)-Total	<0.0000015		0.0000015	mg/dm2.day	29-SEP-21	29-SEP-21	R5605664
Arsenic (As)-Total	0.0000289		0.0000015	mg/dm2.day	29-SEP-21	29-SEP-21	R5605664
Barium (Ba)-Total	0.00153		0.00000074	mg/dm2.day	29-SEP-21	29-SEP-21	R5605664
Beryllium (Be)-Total	<0.0000074		0.0000074	mg/dm2.day	29-SEP-21	29-SEP-21	R5605664
Bismuth (Bi)-Total	<0.0000074		0.0000074	mg/dm2.day	29-SEP-21	29-SEP-21	R5605664
Boron (B)-Total	0.00025		0.00015	mg/dm2.day	29-SEP-21	29-SEP-21	R5605664
Cadmium (Cd)-Total	0.0000124		0.00000074	mg/dm2.day	29-SEP-21	29-SEP-21	R5605664
Calcium (Ca)-Total	2.01		0.00030	mg/dm2.day	29-SEP-21	29-SEP-21	R5605664
Chromium (Cr)-Total	0.0000193		0.0000074	mg/dm2.day	29-SEP-21	29-SEP-21	R5605664

* Refer to Referenced Information for Qualifiers (if any) and Methodology.

ALS ENVIRONMENTAL ANALYTICAL REPORT

Sample Details/Parameters	Result	Qualifier*	D.L.	Units	Extracted	Analyzed	Batch
L2637534-32 CP1-DUSTFALL-8							
Sampled By: Client on 31-AUG-21							
Matrix: Dustfall							
Total Metals in Dustfalls by ICPMS							
Cobalt (Co)-Total	0.0000159		0.0000015	mg/dm2.day	29-SEP-21	29-SEP-21	R5605664
Copper (Cu)-Total	0.000906		0.0000074	mg/dm2.day	29-SEP-21	29-SEP-21	R5605664
Lead (Pb)-Total	0.0000209		0.00000074	mg/dm2.day	29-SEP-21	29-SEP-21	R5605664
Iron (Fe)-Total	0.0187		0.00044	mg/dm2.day	29-SEP-21	29-SEP-21	R5605664
Lithium (Li)-Total	<0.000074		0.000074	mg/dm2.day	29-SEP-21	29-SEP-21	R5605664
Magnesium (Mg)-Total	0.126		0.000074	mg/dm2.day	29-SEP-21	29-SEP-21	R5605664
Manganese (Mn)-Total	0.00432		0.0000015	mg/dm2.day	29-SEP-21	29-SEP-21	R5605664
Molybdenum (Mo)-Total	0.00000997		0.00000074	mg/dm2.day	29-SEP-21	29-SEP-21	R5605664
Nickel (Ni)-Total	0.0000386		0.0000074	mg/dm2.day	29-SEP-21	29-SEP-21	R5605664
Phosphorus (P)-Total	0.260		0.00074	mg/dm2.day	29-SEP-21	29-SEP-21	R5605664
Potassium (K)-Total	0.390		0.00074	mg/dm2.day	29-SEP-21	29-SEP-21	R5605664
Selenium (Se)-Total	0.000017		0.000015	mg/dm2.day	29-SEP-21	29-SEP-21	R5605664
Silicon (Si)-Total	0.0217		0.00074	mg/dm2.day	29-SEP-21	29-SEP-21	R5605664
Silver (Ag)-Total	0.00000431		0.00000015	mg/dm2.day	29-SEP-21	29-SEP-21	R5605664
Sodium (Na)-Total	0.277		0.00074	mg/dm2.day	29-SEP-21	29-SEP-21	R5605664
Strontium (Sr)-Total	0.00398		0.0000015	mg/dm2.day	29-SEP-21	29-SEP-21	R5605664
Thallium (Tl)-Total	<0.0000015		0.0000015	mg/dm2.day	29-SEP-21	29-SEP-21	R5605664
Tin (Sn)-Total	<0.0000015		0.0000015	mg/dm2.day	29-SEP-21	29-SEP-21	R5605664
Titanium (Ti)-Total	0.00021		0.00015	mg/dm2.day	29-SEP-21	29-SEP-21	R5605664
Uranium (U)-Total	0.00000190		0.00000015	mg/dm2.day	29-SEP-21	29-SEP-21	R5605664
Vanadium (V)-Total	0.000027		0.000015	mg/dm2.day	29-SEP-21	29-SEP-21	R5605664
Zinc (Zn)-Total	0.00340		0.000044	mg/dm2.day	29-SEP-21	29-SEP-21	R5605664
L2637534-33 WCP1-DUSTFALL-8							
Sampled By: Client on 31-AUG-21							
Matrix: Dustfall							
Dustfalls-Total, Soluble, Insoluble +FV							
Total Dustfall	49.5		0.10	mg/dm2.day		04-OCT-21	R5608639
Total Insoluble Dustfall	36.7		0.10	mg/dm2.day		04-OCT-21	R5608639
Total Soluble Dustfall	12.8		0.10	mg/dm2.day		04-OCT-21	R5608639
Fixed Dustfall	10.2		0.10	mg/dm2.day		04-OCT-21	R5608639
Fixed Insoluble Dustfall	4.72		0.10	mg/dm2.day		04-OCT-21	R5608639
Fixed Soluble Dustfall	5.53		0.10	mg/dm2.day		04-OCT-21	R5608639
Volatile Dustfall	39.2		0.10	mg/dm2.day		04-OCT-21	R5608639
Volatile Insoluble Dustfall	31.9		0.10	mg/dm2.day		04-OCT-21	R5608639
Volatile Soluble Dustfall	7.26		0.10	mg/dm2.day		04-OCT-21	R5608639
Total Metals in Dustfalls by ICPMS							
Aluminum (Al)-Total	0.0343		0.0000411	mg/dm2.day	29-SEP-21	29-SEP-21	R5605664
Interval			1	days		29-SEP-21	R5604166
Antimony (Sb)-Total	0.0000038		0.0000014	mg/dm2.day	29-SEP-21	29-SEP-21	R5605664
Arsenic (As)-Total	0.0000399		0.0000014	mg/dm2.day	29-SEP-21	29-SEP-21	R5605664
Barium (Ba)-Total	0.000669		0.00000068	mg/dm2.day	29-SEP-21	29-SEP-21	R5605664
Beryllium (Be)-Total	<0.0000068		0.0000068	mg/dm2.day	29-SEP-21	29-SEP-21	R5605664
Bismuth (Bi)-Total	<0.0000068		0.0000068	mg/dm2.day	29-SEP-21	29-SEP-21	R5605664
Boron (B)-Total	0.00144		0.00014	mg/dm2.day	29-SEP-21	29-SEP-21	R5605664
Cadmium (Cd)-Total	0.0000230		0.00000068	mg/dm2.day	29-SEP-21	29-SEP-21	R5605664
Calcium (Ca)-Total	0.528		0.00027	mg/dm2.day	29-SEP-21	29-SEP-21	R5605664

* Refer to Referenced Information for Qualifiers (if any) and Methodology.

ALS ENVIRONMENTAL ANALYTICAL REPORT

Sample Details/Parameters	Result	Qualifier*	D.L.	Units	Extracted	Analyzed	Batch
L2637534-33 WCP1-DUSTFALL-8							
Sampled By: Client on 31-AUG-21							
Matrix: Dustfall							
Total Metals in Dustfalls by ICPMS							
Chromium (Cr)-Total	0.0000662		0.0000068	mg/dm2.day	29-SEP-21	29-SEP-21	R5605664
Cobalt (Co)-Total	0.0000479		0.0000014	mg/dm2.day	29-SEP-21	29-SEP-21	R5605664
Copper (Cu)-Total	0.00701		0.0000068	mg/dm2.day	29-SEP-21	29-SEP-21	R5605664
Lead (Pb)-Total	0.0000991		0.00000068	mg/dm2.day	29-SEP-21	29-SEP-21	R5605664
Iron (Fe)-Total	0.0478		0.00041	mg/dm2.day	29-SEP-21	29-SEP-21	R5605664
Lithium (Li)-Total	0.000120		0.000068	mg/dm2.day	29-SEP-21	29-SEP-21	R5605664
Magnesium (Mg)-Total	0.259		0.000068	mg/dm2.day	29-SEP-21	29-SEP-21	R5605664
Manganese (Mn)-Total	0.00649		0.0000014	mg/dm2.day	29-SEP-21	29-SEP-21	R5605664
Molybdenum (Mo)-Total	0.000190		0.00000068	mg/dm2.day	29-SEP-21	29-SEP-21	R5605664
Nickel (Ni)-Total	0.000540		0.0000068	mg/dm2.day	29-SEP-21	29-SEP-21	R5605664
Phosphorus (P)-Total	1.47		0.00068	mg/dm2.day	29-SEP-21	29-SEP-21	R5605664
Potassium (K)-Total	2.04		0.00068	mg/dm2.day	29-SEP-21	29-SEP-21	R5605664
Selenium (Se)-Total	0.000102		0.000014	mg/dm2.day	29-SEP-21	29-SEP-21	R5605664
Silicon (Si)-Total	0.0893		0.00068	mg/dm2.day	29-SEP-21	29-SEP-21	R5605664
Silver (Ag)-Total	0.00000753		0.00000014	mg/dm2.day	29-SEP-21	29-SEP-21	R5605664
Sodium (Na)-Total	0.224		0.00068	mg/dm2.day	29-SEP-21	29-SEP-21	R5605664
Strontium (Sr)-Total	0.00116		0.0000014	mg/dm2.day	29-SEP-21	29-SEP-21	R5605664
Thallium (Tl)-Total	<0.0000014		0.0000014	mg/dm2.day	29-SEP-21	29-SEP-21	R5605664
Tin (Sn)-Total	<0.0000014		0.0000014	mg/dm2.day	29-SEP-21	29-SEP-21	R5605664
Titanium (Ti)-Total	0.00053		0.00014	mg/dm2.day	29-SEP-21	29-SEP-21	R5605664
Uranium (U)-Total	0.00000378		0.00000014	mg/dm2.day	29-SEP-21	29-SEP-21	R5605664
Vanadium (V)-Total	0.000091		0.000014	mg/dm2.day	29-SEP-21	29-SEP-21	R5605664
Zinc (Zn)-Total	0.0214		0.000041	mg/dm2.day	29-SEP-21	29-SEP-21	R5605664
L2637534-34 GH1-DUSTFALL-8							
Sampled By: Client on 31-AUG-21							
Matrix: Dustfall							
Dustfalls-Total, Soluble, Insoluble +FV							
Total Dustfall	23.0		0.10	mg/dm2.day		04-OCT-21	R5608639
Total Insoluble Dustfall	12.0		0.10	mg/dm2.day		04-OCT-21	R5608639
Total Soluble Dustfall	11.0		0.10	mg/dm2.day		04-OCT-21	R5608639
Fixed Dustfall	5.80		0.10	mg/dm2.day		04-OCT-21	R5608639
Fixed Insoluble Dustfall	2.03		0.10	mg/dm2.day		04-OCT-21	R5608639
Fixed Soluble Dustfall	3.77		0.10	mg/dm2.day		04-OCT-21	R5608639
Volatile Dustfall	17.2		0.10	mg/dm2.day		04-OCT-21	R5608639
Volatile Insoluble Dustfall	10.0		0.10	mg/dm2.day		04-OCT-21	R5608639
Volatile Soluble Dustfall	7.21		0.10	mg/dm2.day		04-OCT-21	R5608639
Total Metals in Dustfalls by ICPMS							
Aluminum (Al)-Total	0.0250		0.0000431	mg/dm2.day	29-SEP-21	29-SEP-21	R5605664
Interval				days		29-SEP-21	R5604166
Antimony (Sb)-Total	0.0000028		0.0000014	mg/dm2.day	29-SEP-21	29-SEP-21	R5605664
Arsenic (As)-Total	0.0000293		0.0000014	mg/dm2.day	29-SEP-21	29-SEP-21	R5605664
Barium (Ba)-Total	0.000335		0.00000071	mg/dm2.day	29-SEP-21	29-SEP-21	R5605664
Beryllium (Be)-Total	<0.0000071		0.0000071	mg/dm2.day	29-SEP-21	29-SEP-21	R5605664
Bismuth (Bi)-Total	<0.0000071		0.0000071	mg/dm2.day	29-SEP-21	29-SEP-21	R5605664
Boron (B)-Total	0.00060		0.00014	mg/dm2.day	29-SEP-21	29-SEP-21	R5605664
Cadmium (Cd)-Total	0.00000867		0.00000071	mg/dm2.day	29-SEP-21	29-SEP-21	R5605664

* Refer to Referenced Information for Qualifiers (if any) and Methodology.

ALS ENVIRONMENTAL ANALYTICAL REPORT

Sample Details/Parameters	Result	Qualifier*	D.L.	Units	Extracted	Analyzed	Batch
L2637534-34 GH1-DUSTFALL-8							
Sampled By: Client on 31-AUG-21							
Matrix: Dustfall							
Total Metals in Dustfalls by ICPMS							
Calcium (Ca)-Total	0.245		0.00028	mg/dm2.day	29-SEP-21	29-SEP-21	R5605664
Chromium (Cr)-Total	0.0000603		0.0000071	mg/dm2.day	29-SEP-21	29-SEP-21	R5605664
Cobalt (Co)-Total	0.0000378		0.0000014	mg/dm2.day	29-SEP-21	29-SEP-21	R5605664
Copper (Cu)-Total	0.00699		0.0000071	mg/dm2.day	29-SEP-21	29-SEP-21	R5605664
Lead (Pb)-Total	0.0000391		0.00000071	mg/dm2.day	29-SEP-21	29-SEP-21	R5605664
Iron (Fe)-Total	0.0370		0.00043	mg/dm2.day	29-SEP-21	29-SEP-21	R5605664
Lithium (Li)-Total	0.000082		0.000071	mg/dm2.day	29-SEP-21	29-SEP-21	R5605664
Magnesium (Mg)-Total	0.172		0.000071	mg/dm2.day	29-SEP-21	29-SEP-21	R5605664
Manganese (Mn)-Total	0.00317		0.0000014	mg/dm2.day	29-SEP-21	29-SEP-21	R5605664
Molybdenum (Mo)-Total	0.000116		0.00000071	mg/dm2.day	29-SEP-21	29-SEP-21	R5605664
Nickel (Ni)-Total	0.000234		0.0000071	mg/dm2.day	29-SEP-21	29-SEP-21	R5605664
Phosphorus (P)-Total	1.02		0.00071	mg/dm2.day	29-SEP-21	29-SEP-21	R5605664
Potassium (K)-Total	1.40		0.00071	mg/dm2.day	29-SEP-21	29-SEP-21	R5605664
Selenium (Se)-Total	0.000089		0.000014	mg/dm2.day	29-SEP-21	29-SEP-21	R5605664
Silicon (Si)-Total	0.0595		0.00071	mg/dm2.day	29-SEP-21	29-SEP-21	R5605664
Silver (Ag)-Total	0.00000255		0.00000014	mg/dm2.day	29-SEP-21	29-SEP-21	R5605664
Sodium (Na)-Total	0.199		0.00071	mg/dm2.day	29-SEP-21	29-SEP-21	R5605664
Strontium (Sr)-Total	0.000749		0.0000014	mg/dm2.day	29-SEP-21	29-SEP-21	R5605664
Thallium (Tl)-Total	<0.0000014		0.0000014	mg/dm2.day	29-SEP-21	29-SEP-21	R5605664
Tin (Sn)-Total	<0.0000014		0.0000014	mg/dm2.day	29-SEP-21	29-SEP-21	R5605664
Titanium (Ti)-Total	0.00041		0.00014	mg/dm2.day	29-SEP-21	29-SEP-21	R5605664
Uranium (U)-Total	0.00000228		0.00000014	mg/dm2.day	29-SEP-21	29-SEP-21	R5605664
Vanadium (V)-Total	0.000067		0.000014	mg/dm2.day	29-SEP-21	29-SEP-21	R5605664
Zinc (Zn)-Total	0.0209		0.000043	mg/dm2.day	29-SEP-21	29-SEP-21	R5605664
L2637534-35 SPP1-DUSTFALL-33							
Sampled By: Client on 04-AUG-21							
Matrix: Dustfall							
Dustfalls-Total, Soluble, Insoluble +FV							
Total Dustfall	79.8		0.10	mg/dm2.day		04-OCT-21	R5608639
Total Insoluble Dustfall	41.6		0.10	mg/dm2.day		04-OCT-21	R5608639
Total Soluble Dustfall	38.2		0.10	mg/dm2.day		04-OCT-21	R5608639
Fixed Dustfall	17.0		0.10	mg/dm2.day		04-OCT-21	R5608639
Fixed Insoluble Dustfall	7.39		0.10	mg/dm2.day		04-OCT-21	R5608639
Fixed Soluble Dustfall	9.63		0.10	mg/dm2.day		04-OCT-21	R5608639
Volatile Dustfall	62.8		0.10	mg/dm2.day		04-OCT-21	R5608639
Volatile Insoluble Dustfall	34.2		0.10	mg/dm2.day		04-OCT-21	R5608639
Volatile Soluble Dustfall	28.6		0.10	mg/dm2.day		04-OCT-21	R5608639
Total Metals in Dustfalls by ICPMS							
Aluminum (Al)-Total	0.0558		0.00018	mg/dm2.day	29-SEP-21	29-SEP-21	R5605664
Interval			1	days		29-SEP-21	R5604166
Antimony (Sb)-Total	0.0000228		0.0000059	mg/dm2.day	29-SEP-21	29-SEP-21	R5605664
Arsenic (As)-Total	0.000168		0.0000059	mg/dm2.day	29-SEP-21	29-SEP-21	R5605664
Barium (Ba)-Total	0.00156		0.0000030	mg/dm2.day	29-SEP-21	29-SEP-21	R5605664
Beryllium (Be)-Total	<0.000030		0.000030	mg/dm2.day	29-SEP-21	29-SEP-21	R5605664
Bismuth (Bi)-Total	<0.000030		0.000030	mg/dm2.day	29-SEP-21	29-SEP-21	R5605664
Boron (B)-Total	0.00367		0.00059	mg/dm2.day	29-SEP-21	29-SEP-21	R5605664
Cadmium (Cd)-Total	0.0000450		0.0000030	mg/dm2.day	29-SEP-21	29-SEP-21	R5605664

* Refer to Referenced Information for Qualifiers (if any) and Methodology.

ALS ENVIRONMENTAL ANALYTICAL REPORT

Sample Details/Parameters	Result	Qualifier*	D.L.	Units	Extracted	Analyzed	Batch
L2637534-35 SPP1-DUSTFALL-33							
Sampled By: Client on 04-AUG-21							
Matrix: Dustfall							
Total Metals in Dustfalls by ICPMS							
Calcium (Ca)-Total	0.584		0.0012	mg/dm2.day	29-SEP-21	29-SEP-21	R5605664
Chromium (Cr)-Total	0.000117		0.000030	mg/dm2.day	29-SEP-21	29-SEP-21	R5605664
Cobalt (Co)-Total	0.0000509		0.0000059	mg/dm2.day	29-SEP-21	29-SEP-21	R5605664
Copper (Cu)-Total	0.00990		0.000030	mg/dm2.day	29-SEP-21	29-SEP-21	R5605664
Lead (Pb)-Total	0.00122		0.0000030	mg/dm2.day	29-SEP-21	29-SEP-21	R5605664
Iron (Fe)-Total	0.0720		0.0018	mg/dm2.day	29-SEP-21	29-SEP-21	R5605664
Lithium (Li)-Total	<0.00030		0.00030	mg/dm2.day	29-SEP-21	29-SEP-21	R5605664
Magnesium (Mg)-Total	0.356		0.00030	mg/dm2.day	29-SEP-21	29-SEP-21	R5605664
Manganese (Mn)-Total	0.0101		0.0000059	mg/dm2.day	29-SEP-21	29-SEP-21	R5605664
Molybdenum (Mo)-Total	0.000172		0.0000030	mg/dm2.day	29-SEP-21	29-SEP-21	R5605664
Nickel (Ni)-Total	0.00136		0.000030	mg/dm2.day	29-SEP-21	29-SEP-21	R5605664
Phosphorus (P)-Total	2.02		0.0030	mg/dm2.day	29-SEP-21	29-SEP-21	R5605664
Potassium (K)-Total	3.32		0.0030	mg/dm2.day	29-SEP-21	29-SEP-21	R5605664
Selenium (Se)-Total	0.000183		0.000059	mg/dm2.day	29-SEP-21	29-SEP-21	R5605664
Silicon (Si)-Total	0.0862		0.0030	mg/dm2.day	29-SEP-21	29-SEP-21	R5605664
Silver (Ag)-Total	0.0000256		0.00000059	mg/dm2.day	29-SEP-21	29-SEP-21	R5605664
Sodium (Na)-Total	0.186		0.0030	mg/dm2.day	29-SEP-21	29-SEP-21	R5605664
Strontium (Sr)-Total	0.00279		0.0000059	mg/dm2.day	29-SEP-21	29-SEP-21	R5605664
Thallium (Tl)-Total	<0.0000059		0.0000059	mg/dm2.day	29-SEP-21	29-SEP-21	R5605664
Tin (Sn)-Total	<0.0000059		0.0000059	mg/dm2.day	29-SEP-21	29-SEP-21	R5605664
Titanium (Ti)-Total	<0.00059		0.00059	mg/dm2.day	29-SEP-21	29-SEP-21	R5605664
Uranium (U)-Total	0.00000231		0.00000059	mg/dm2.day	29-SEP-21	29-SEP-21	R5605664
Vanadium (V)-Total	0.000076		0.000059	mg/dm2.day	29-SEP-21	29-SEP-21	R5605664
Zinc (Zn)-Total	0.0346		0.00018	mg/dm2.day	29-SEP-21	29-SEP-21	R5605664
L2637534-36 SPP1-DUSTFALL-34							
Sampled By: Client on 11-AUG-21							
Matrix: Dustfall							
Dustfalls-Total, Soluble, Insoluble +FV							
Total Dustfall	10.5		0.10	mg/dm2.day		04-OCT-21	R5608639
Total Insoluble Dustfall	3.98		0.10	mg/dm2.day		04-OCT-21	R5608639
Total Soluble Dustfall	6.54		0.10	mg/dm2.day		04-OCT-21	R5608639
Fixed Dustfall	2.28		0.10	mg/dm2.day		04-OCT-21	R5608639
Fixed Insoluble Dustfall	0.71		0.10	mg/dm2.day		04-OCT-21	R5608639
Fixed Soluble Dustfall	1.58		0.10	mg/dm2.day		04-OCT-21	R5608639
Volatile Dustfall	8.23		0.10	mg/dm2.day		04-OCT-21	R5608639
Volatile Insoluble Dustfall	3.27		0.10	mg/dm2.day		04-OCT-21	R5608639
Volatile Soluble Dustfall	4.96		0.10	mg/dm2.day		04-OCT-21	R5608639
Total Metals in Dustfalls by ICPMS							
Aluminum (Al)-Total	0.0344		0.00023	mg/dm2.day	29-SEP-21	29-SEP-21	R5605664
Interval			1	days		29-SEP-21	R5604166
Antimony (Sb)-Total	0.0000098		0.0000077	mg/dm2.day	29-SEP-21	29-SEP-21	R5605664
Arsenic (As)-Total	0.0000452		0.0000077	mg/dm2.day	29-SEP-21	29-SEP-21	R5605664
Barium (Ba)-Total	0.000484		0.0000039	mg/dm2.day	29-SEP-21	29-SEP-21	R5605664
Beryllium (Be)-Total	<0.000039		0.000039	mg/dm2.day	29-SEP-21	29-SEP-21	R5605664
Bismuth (Bi)-Total	<0.000039		0.000039	mg/dm2.day	29-SEP-21	29-SEP-21	R5605664
Boron (B)-Total	0.00175		0.00077	mg/dm2.day	29-SEP-21	29-SEP-21	R5605664
Cadmium (Cd)-Total	0.0000165		0.0000039	mg/dm2.day	29-SEP-21	29-SEP-21	R5605664
Calcium (Ca)-Total	0.450		0.0015	mg/dm2.day	29-SEP-21	29-SEP-21	R5605664
Chromium (Cr)-Total	0.000061		0.000039	mg/dm2.day	29-SEP-21	29-SEP-21	R5605664

* Refer to Referenced Information for Qualifiers (if any) and Methodology.

ALS ENVIRONMENTAL ANALYTICAL REPORT

Sample Details/Parameters	Result	Qualifier*	D.L.	Units	Extracted	Analyzed	Batch
L2637534-36 SPP1-DUSTFALL-34							
Sampled By: Client on 11-AUG-21							
Matrix: Dustfall							
Total Metals in Dustfalls by ICPMS							
Cobalt (Co)-Total	0.0000301		0.0000077	mg/dm2.day	29-SEP-21	29-SEP-21	R5605664
Copper (Cu)-Total	0.00776		0.000039	mg/dm2.day	29-SEP-21	29-SEP-21	R5605664
Lead (Pb)-Total	0.000512		0.0000039	mg/dm2.day	29-SEP-21	29-SEP-21	R5605664
Iron (Fe)-Total	0.0457		0.0023	mg/dm2.day	29-SEP-21	29-SEP-21	R5605664
Lithium (Li)-Total	<0.00039		0.00039	mg/dm2.day	29-SEP-21	29-SEP-21	R5605664
Magnesium (Mg)-Total	0.221		0.00039	mg/dm2.day	29-SEP-21	29-SEP-21	R5605664
Manganese (Mn)-Total	0.00600		0.0000077	mg/dm2.day	29-SEP-21	29-SEP-21	R5605664
Molybdenum (Mo)-Total	0.000149		0.0000039	mg/dm2.day	29-SEP-21	29-SEP-21	R5605664
Nickel (Ni)-Total	0.000364		0.000039	mg/dm2.day	29-SEP-21	29-SEP-21	R5605664
Phosphorus (P)-Total	1.41		0.0039	mg/dm2.day	29-SEP-21	29-SEP-21	R5605664
Potassium (K)-Total	2.18		0.0039	mg/dm2.day	29-SEP-21	29-SEP-21	R5605664
Selenium (Se)-Total	0.000096		0.000077	mg/dm2.day	29-SEP-21	29-SEP-21	R5605664
Silicon (Si)-Total	0.0731		0.0039	mg/dm2.day	29-SEP-21	29-SEP-21	R5605664
Silver (Ag)-Total	0.0000137		0.00000077	mg/dm2.day	29-SEP-21	29-SEP-21	R5605664
Sodium (Na)-Total	0.125		0.0039	mg/dm2.day	29-SEP-21	29-SEP-21	R5605664
Strontium (Sr)-Total	0.00128		0.0000077	mg/dm2.day	29-SEP-21	29-SEP-21	R5605664
Thallium (Tl)-Total	<0.0000077		0.0000077	mg/dm2.day	29-SEP-21	29-SEP-21	R5605664
Tin (Sn)-Total	<0.0000077		0.0000077	mg/dm2.day	29-SEP-21	29-SEP-21	R5605664
Titanium (Ti)-Total	<0.00077		0.00077	mg/dm2.day	29-SEP-21	29-SEP-21	R5605664
Uranium (U)-Total	0.00000239		0.00000077	mg/dm2.day	29-SEP-21	29-SEP-21	R5605664
Vanadium (V)-Total	<0.000077		0.000077	mg/dm2.day	29-SEP-21	29-SEP-21	R5605664
Zinc (Zn)-Total	0.0206		0.00023	mg/dm2.day	29-SEP-21	29-SEP-21	R5605664
L2637534-37 SPP1-DUSTFALL-35							
Sampled By: Client on 18-AUG-21							
Matrix: Dustfall							
Dustfalls-Total, Soluble, Insoluble +FV							
Total Dustfall	6.25		0.10	mg/dm2.day		04-OCT-21	R5608639
Total Insoluble Dustfall	2.75		0.10	mg/dm2.day		04-OCT-21	R5608639
Total Soluble Dustfall	3.50		0.10	mg/dm2.day		04-OCT-21	R5608639
Fixed Dustfall	1.68		0.10	mg/dm2.day		04-OCT-21	R5608639
Fixed Insoluble Dustfall	0.57		0.10	mg/dm2.day		04-OCT-21	R5608639
Fixed Soluble Dustfall	1.10		0.10	mg/dm2.day		04-OCT-21	R5608639
Volatile Dustfall	4.58		0.10	mg/dm2.day		04-OCT-21	R5608639
Volatile Insoluble Dustfall	2.18		0.10	mg/dm2.day		04-OCT-21	R5608639
Volatile Soluble Dustfall	2.40		0.10	mg/dm2.day		04-OCT-21	R5608639
Total Metals in Dustfalls by ICPMS							
Aluminum (Al)-Total	0.0292		0.00019	mg/dm2.day	29-SEP-21	29-SEP-21	R5605664
Interval			1	days		29-SEP-21	R5604166
Antimony (Sb)-Total	0.0000077		0.0000064	mg/dm2.day	29-SEP-21	29-SEP-21	R5605664
Arsenic (As)-Total	0.0000339		0.0000064	mg/dm2.day	29-SEP-21	29-SEP-21	R5605664
Barium (Ba)-Total	0.000453		0.0000032	mg/dm2.day	29-SEP-21	29-SEP-21	R5605664
Beryllium (Be)-Total	<0.000032		0.000032	mg/dm2.day	29-SEP-21	29-SEP-21	R5605664
Bismuth (Bi)-Total	<0.000032		0.000032	mg/dm2.day	29-SEP-21	29-SEP-21	R5605664
Boron (B)-Total	0.00151		0.00064	mg/dm2.day	29-SEP-21	29-SEP-21	R5605664
Cadmium (Cd)-Total	0.0000127		0.0000032	mg/dm2.day	29-SEP-21	29-SEP-21	R5605664
Calcium (Ca)-Total	0.335		0.0013	mg/dm2.day	29-SEP-21	29-SEP-21	R5605664
Chromium (Cr)-Total	0.000047		0.000032	mg/dm2.day	29-SEP-21	29-SEP-21	R5605664
Cobalt (Co)-Total	0.0000238		0.0000064	mg/dm2.day	29-SEP-21	29-SEP-21	R5605664
Copper (Cu)-Total	0.00535		0.000032	mg/dm2.day	29-SEP-21	29-SEP-21	R5605664

* Refer to Referenced Information for Qualifiers (if any) and Methodology.

ALS ENVIRONMENTAL ANALYTICAL REPORT

Sample Details/Parameters	Result	Qualifier*	D.L.	Units	Extracted	Analyzed	Batch
L2637534-37 SPP1-DUSTFALL-35							
Sampled By: Client on 18-AUG-21							
Matrix: Dustfall							
Total Metals in Dustfalls by ICPMS							
Lead (Pb)-Total	0.000410		0.0000032	mg/dm2.day	29-SEP-21	29-SEP-21	R5605664
Iron (Fe)-Total	0.0352		0.0019	mg/dm2.day	29-SEP-21	29-SEP-21	R5605664
Lithium (Li)-Total	<0.00032		0.00032	mg/dm2.day	29-SEP-21	29-SEP-21	R5605664
Magnesium (Mg)-Total	0.122		0.00032	mg/dm2.day	29-SEP-21	29-SEP-21	R5605664
Manganese (Mn)-Total	0.00290		0.0000064	mg/dm2.day	29-SEP-21	29-SEP-21	R5605664
Molybdenum (Mo)-Total	0.000102		0.0000032	mg/dm2.day	29-SEP-21	29-SEP-21	R5605664
Nickel (Ni)-Total	0.000366		0.000032	mg/dm2.day	29-SEP-21	29-SEP-21	R5605664
Phosphorus (P)-Total	0.687		0.0032	mg/dm2.day	29-SEP-21	29-SEP-21	R5605664
Potassium (K)-Total	1.65		0.0032	mg/dm2.day	29-SEP-21	29-SEP-21	R5605664
Selenium (Se)-Total	<0.000064		0.000064	mg/dm2.day	29-SEP-21	29-SEP-21	R5605664
Silicon (Si)-Total	0.173		0.0032	mg/dm2.day	29-SEP-21	29-SEP-21	R5605664
Silver (Ag)-Total	0.0000102		0.00000064	mg/dm2.day	29-SEP-21	29-SEP-21	R5605664
Sodium (Na)-Total	0.147		0.0032	mg/dm2.day	29-SEP-21	29-SEP-21	R5605664
Strontium (Sr)-Total	0.00119		0.0000064	mg/dm2.day	29-SEP-21	29-SEP-21	R5605664
Thallium (Tl)-Total	<0.0000064		0.0000064	mg/dm2.day	29-SEP-21	29-SEP-21	R5605664
Tin (Sn)-Total	<0.0000064		0.0000064	mg/dm2.day	29-SEP-21	29-SEP-21	R5605664
Titanium (Ti)-Total	<0.00064		0.00064	mg/dm2.day	29-SEP-21	29-SEP-21	R5605664
Uranium (U)-Total	0.00000101		0.00000064	mg/dm2.day	29-SEP-21	29-SEP-21	R5605664
Vanadium (V)-Total	<0.000064		0.000064	mg/dm2.day	29-SEP-21	29-SEP-21	R5605664
Zinc (Zn)-Total	0.0140		0.00019	mg/dm2.day	29-SEP-21	29-SEP-21	R5605664
L2637534-38 SPP1-DUSTFALL-36							
Sampled By: Client on 25-AUG-21							
Matrix: Dustfall							
Dustfalls-Total, Soluble, Insoluble +FV							
Total Dustfall	19.1		0.10	mg/dm2.day		04-OCT-21	R5608639
Total Insoluble Dustfall	7.35		0.10	mg/dm2.day		04-OCT-21	R5608639
Total Soluble Dustfall	11.7		0.10	mg/dm2.day		04-OCT-21	R5608639
Fixed Dustfall	6.39		0.10	mg/dm2.day		04-OCT-21	R5608639
Fixed Insoluble Dustfall	2.36		0.10	mg/dm2.day		04-OCT-21	R5608639
Fixed Soluble Dustfall	4.04		0.10	mg/dm2.day		04-OCT-21	R5608639
Volatile Dustfall	12.7		0.10	mg/dm2.day		04-OCT-21	R5608639
Volatile Insoluble Dustfall	4.99		0.10	mg/dm2.day		04-OCT-21	R5608639
Volatile Soluble Dustfall	7.71		0.10	mg/dm2.day		04-OCT-21	R5608639
Total Metals in Dustfalls by ICPMS							
Aluminum (Al)-Total	0.0554		0.00027	mg/dm2.day	29-SEP-21	29-SEP-21	R5605664
Interval			1	days		29-SEP-21	R5604166
Antimony (Sb)-Total	0.0000304		0.0000090	mg/dm2.day	29-SEP-21	29-SEP-21	R5605664
Arsenic (As)-Total	0.000113		0.0000090	mg/dm2.day	29-SEP-21	29-SEP-21	R5605664
Barium (Ba)-Total	0.000586		0.0000045	mg/dm2.day	29-SEP-21	29-SEP-21	R5605664
Beryllium (Be)-Total	<0.000045		0.000045	mg/dm2.day	29-SEP-21	29-SEP-21	R5605664
Bismuth (Bi)-Total	<0.000045		0.000045	mg/dm2.day	29-SEP-21	29-SEP-21	R5605664
Boron (B)-Total	0.00331		0.00090	mg/dm2.day	29-SEP-21	29-SEP-21	R5605664
Cadmium (Cd)-Total	0.0000325		0.0000045	mg/dm2.day	29-SEP-21	29-SEP-21	R5605664
Calcium (Ca)-Total	2.01		0.0018	mg/dm2.day	29-SEP-21	29-SEP-21	R5605664
Chromium (Cr)-Total	0.000094		0.000045	mg/dm2.day	29-SEP-21	29-SEP-21	R5605664
Cobalt (Co)-Total	0.0000418		0.0000090	mg/dm2.day	29-SEP-21	29-SEP-21	R5605664
Copper (Cu)-Total	0.0119		0.000045	mg/dm2.day	29-SEP-21	29-SEP-21	R5605664
Lead (Pb)-Total	0.000488		0.0000045	mg/dm2.day	29-SEP-21	29-SEP-21	R5605664
Iron (Fe)-Total	0.0543		0.0027	mg/dm2.day	29-SEP-21	29-SEP-21	R5605664

* Refer to Referenced Information for Qualifiers (if any) and Methodology.

ALS ENVIRONMENTAL ANALYTICAL REPORT

Sample Details/Parameters	Result	Qualifier*	D.L.	Units	Extracted	Analyzed	Batch
L2637534-38 SPP1-DUSTFALL-36							
Sampled By: Client on 25-AUG-21							
Matrix: Dustfall							
Total Metals in Dustfalls by ICPMS							
Lithium (Li)-Total	<0.00045		0.00045	mg/dm2.day	29-SEP-21	29-SEP-21	R5605664
Magnesium (Mg)-Total	0.353		0.00045	mg/dm2.day	29-SEP-21	29-SEP-21	R5605664
Manganese (Mn)-Total	0.00518		0.0000090	mg/dm2.day	29-SEP-21	29-SEP-21	R5605664
Molybdenum (Mo)-Total	0.000204		0.0000045	mg/dm2.day	29-SEP-21	29-SEP-21	R5605664
Nickel (Ni)-Total	0.00174		0.000045	mg/dm2.day	29-SEP-21	29-SEP-21	R5605664
Phosphorus (P)-Total	3.43		0.0045	mg/dm2.day	29-SEP-21	29-SEP-21	R5605664
Potassium (K)-Total	4.46		0.0045	mg/dm2.day	29-SEP-21	29-SEP-21	R5605664
Selenium (Se)-Total	0.000195		0.000090	mg/dm2.day	29-SEP-21	29-SEP-21	R5605664
Silicon (Si)-Total	0.0907		0.0045	mg/dm2.day	29-SEP-21	29-SEP-21	R5605664
Silver (Ag)-Total	0.0000143		0.00000090	mg/dm2.day	29-SEP-21	29-SEP-21	R5605664
Sodium (Na)-Total	1.10		0.0045	mg/dm2.day	29-SEP-21	29-SEP-21	R5605664
Strontium (Sr)-Total	0.00313		0.0000090	mg/dm2.day	29-SEP-21	29-SEP-21	R5605664
Thallium (Tl)-Total	<0.0000090		0.0000090	mg/dm2.day	29-SEP-21	29-SEP-21	R5605664
Tin (Sn)-Total	<0.0000090		0.0000090	mg/dm2.day	29-SEP-21	29-SEP-21	R5605664
Titanium (Ti)-Total	<0.00090		0.00090	mg/dm2.day	29-SEP-21	29-SEP-21	R5605664
Uranium (U)-Total	0.00000205		0.00000090	mg/dm2.day	29-SEP-21	29-SEP-21	R5605664
Vanadium (V)-Total	<0.000090		0.000090	mg/dm2.day	29-SEP-21	29-SEP-21	R5605664
Zinc (Zn)-Total	0.0333		0.00027	mg/dm2.day	29-SEP-21	29-SEP-21	R5605664
L2637534-39 SPP1-DUSTFALL-37							
Sampled By: Client on 01-SEP-21							
Matrix: Dustfall							
Dustfalls-Total, Soluble, Insoluble +FV							
Total Dustfall	13.1		0.10	mg/dm2.day		04-OCT-21	R5608639
Total Insoluble Dustfall	7.33		0.10	mg/dm2.day		04-OCT-21	R5608639
Total Soluble Dustfall	5.77		0.10	mg/dm2.day		04-OCT-21	R5608639
Fixed Dustfall	3.17		0.10	mg/dm2.day		04-OCT-21	R5608639
Fixed Insoluble Dustfall	1.59		0.10	mg/dm2.day		04-OCT-21	R5608639
Fixed Soluble Dustfall	1.58		0.10	mg/dm2.day		04-OCT-21	R5608639
Volatile Dustfall	9.93		0.10	mg/dm2.day		04-OCT-21	R5608639
Volatile Insoluble Dustfall	5.74		0.10	mg/dm2.day		04-OCT-21	R5608639
Volatile Soluble Dustfall	4.20		0.10	mg/dm2.day		04-OCT-21	R5608639
Total Metals in Dustfalls by ICPMS							
Aluminum (Al)-Total	0.0732		0.00036	mg/dm2.day	29-SEP-21	29-SEP-21	R5605664
Interval			1	days		29-SEP-21	R5604166
Antimony (Sb)-Total	0.000030		0.000012	mg/dm2.day	29-SEP-21	29-SEP-21	R5605664
Arsenic (As)-Total	0.000119		0.000012	mg/dm2.day	29-SEP-21	29-SEP-21	R5605664
Barium (Ba)-Total	0.00106		0.0000061	mg/dm2.day	29-SEP-21	29-SEP-21	R5605664
Beryllium (Be)-Total	<0.000061		0.000061	mg/dm2.day	29-SEP-21	29-SEP-21	R5605664
Bismuth (Bi)-Total	<0.000061		0.000061	mg/dm2.day	29-SEP-21	29-SEP-21	R5605664
Boron (B)-Total	0.0038		0.0012	mg/dm2.day	29-SEP-21	29-SEP-21	R5605664
Cadmium (Cd)-Total	0.0000360		0.0000061	mg/dm2.day	29-SEP-21	29-SEP-21	R5605664
Calcium (Ca)-Total	0.969		0.0024	mg/dm2.day	29-SEP-21	29-SEP-21	R5605664
Chromium (Cr)-Total	0.000151		0.000061	mg/dm2.day	29-SEP-21	29-SEP-21	R5605664
Cobalt (Co)-Total	0.000067		0.000012	mg/dm2.day	29-SEP-21	29-SEP-21	R5605664
Copper (Cu)-Total	0.00381		0.000061	mg/dm2.day	29-SEP-21	29-SEP-21	R5605664
Lead (Pb)-Total	0.000940		0.0000061	mg/dm2.day	29-SEP-21	29-SEP-21	R5605664
Iron (Fe)-Total	0.0829		0.0036	mg/dm2.day	29-SEP-21	29-SEP-21	R5605664
Lithium (Li)-Total	<0.00061		0.00061	mg/dm2.day	29-SEP-21	29-SEP-21	R5605664
Magnesium (Mg)-Total	0.233		0.00061	mg/dm2.day	29-SEP-21	29-SEP-21	R5605664

* Refer to Referenced Information for Qualifiers (if any) and Methodology.

ALS ENVIRONMENTAL ANALYTICAL REPORT

Sample Details/Parameters	Result	Qualifier*	D.L.	Units	Extracted	Analyzed	Batch
L2637534-39 SPP1-DUSTFALL-37							
Sampled By: Client on 01-SEP-21							
Matrix: Dustfall							
Total Metals in Dustfalls by ICPMS							
Manganese (Mn)-Total	0.00799		0.000012	mg/dm2.day	29-SEP-21	29-SEP-21	R5605664
Molybdenum (Mo)-Total	0.000215		0.0000061	mg/dm2.day	29-SEP-21	29-SEP-21	R5605664
Nickel (Ni)-Total	0.00210		0.000061	mg/dm2.day	29-SEP-21	29-SEP-21	R5605664
Phosphorus (P)-Total	0.982		0.0061	mg/dm2.day	29-SEP-21	29-SEP-21	R5605664
Potassium (K)-Total	1.64		0.0061	mg/dm2.day	29-SEP-21	29-SEP-21	R5605664
Selenium (Se)-Total	<0.00012		0.00012	mg/dm2.day	29-SEP-21	29-SEP-21	R5605664
Silicon (Si)-Total	0.140		0.0061	mg/dm2.day	29-SEP-21	29-SEP-21	R5605664
Silver (Ag)-Total	0.0000170		0.0000012	mg/dm2.day	29-SEP-21	29-SEP-21	R5605664
Sodium (Na)-Total	0.237		0.0061	mg/dm2.day	29-SEP-21	29-SEP-21	R5605664
Strontium (Sr)-Total	0.00411		0.000012	mg/dm2.day	29-SEP-21	29-SEP-21	R5605664
Thallium (Tl)-Total	<0.000012		0.000012	mg/dm2.day	29-SEP-21	29-SEP-21	R5605664
Tin (Sn)-Total	<0.000012		0.000012	mg/dm2.day	29-SEP-21	29-SEP-21	R5605664
Titanium (Ti)-Total	<0.0012		0.0012	mg/dm2.day	29-SEP-21	29-SEP-21	R5605664
Uranium (U)-Total	0.000155		0.0000012	mg/dm2.day	29-SEP-21	29-SEP-21	R5605664
Vanadium (V)-Total	0.00013		0.00012	mg/dm2.day	29-SEP-21	29-SEP-21	R5605664
Zinc (Zn)-Total	0.0194		0.00036	mg/dm2.day	29-SEP-21	29-SEP-21	R5605664
L2637534-40 DUSTFALL-GALLINGER ROAD							
Sampled By: Client on 31-AUG-21							
Matrix: Dustfall							
Dustfalls-Total, Soluble, Insoluble +FV							
Total Dustfall	1.65		0.10	mg/dm2.day		04-OCT-21	R5608639
Total Insoluble Dustfall	0.79		0.10	mg/dm2.day		04-OCT-21	R5608639
Total Soluble Dustfall	0.86		0.10	mg/dm2.day		04-OCT-21	R5608639
Fixed Dustfall	0.48		0.10	mg/dm2.day		04-OCT-21	R5608639
Fixed Insoluble Dustfall	0.26		0.10	mg/dm2.day		04-OCT-21	R5608639
Fixed Soluble Dustfall	0.22		0.10	mg/dm2.day		04-OCT-21	R5608639
Volatile Dustfall	1.18		0.10	mg/dm2.day		04-OCT-21	R5608639
Volatile Insoluble Dustfall	0.53		0.10	mg/dm2.day		04-OCT-21	R5608639
Volatile Soluble Dustfall	0.65		0.10	mg/dm2.day		04-OCT-21	R5608639
Total Metals in Dustfalls by ICPMS							
Aluminum (Al)-Total	0.00558		0.000051	mg/dm2.day	29-SEP-21	29-SEP-21	R5605664
Interval			1	days		29-SEP-21	R5604166
Antimony (Sb)-Total	0.0000029		0.0000017	mg/dm2.day	29-SEP-21	29-SEP-21	R5605664
Arsenic (As)-Total	0.0000049		0.0000017	mg/dm2.day	29-SEP-21	29-SEP-21	R5605664
Barium (Ba)-Total	0.0000862		0.00000085	mg/dm2.day	29-SEP-21	29-SEP-21	R5605664
Beryllium (Be)-Total	<0.0000085		0.0000085	mg/dm2.day	29-SEP-21	29-SEP-21	R5605664
Bismuth (Bi)-Total	<0.0000085		0.0000085	mg/dm2.day	29-SEP-21	29-SEP-21	R5605664
Boron (B)-Total	<0.00017		0.00017	mg/dm2.day	29-SEP-21	29-SEP-21	R5605664
Cadmium (Cd)-Total	0.00000249		0.00000085	mg/dm2.day	29-SEP-21	29-SEP-21	R5605664
Calcium (Ca)-Total	0.0332		0.00034	mg/dm2.day	29-SEP-21	29-SEP-21	R5605664
Chromium (Cr)-Total	0.0000113		0.0000085	mg/dm2.day	29-SEP-21	29-SEP-21	R5605664
Cobalt (Co)-Total	0.0000032		0.0000017	mg/dm2.day	29-SEP-21	29-SEP-21	R5605664
Copper (Cu)-Total	0.000135		0.0000085	mg/dm2.day	29-SEP-21	29-SEP-21	R5605664
Lead (Pb)-Total	0.0000185		0.00000085	mg/dm2.day	29-SEP-21	29-SEP-21	R5605664
Iron (Fe)-Total	0.00591		0.00051	mg/dm2.day	29-SEP-21	29-SEP-21	R5605664
Lithium (Li)-Total	<0.000085		0.000085	mg/dm2.day	29-SEP-21	29-SEP-21	R5605664
Magnesium (Mg)-Total	0.0119		0.000085	mg/dm2.day	29-SEP-21	29-SEP-21	R5605664
Manganese (Mn)-Total	0.000610		0.0000017	mg/dm2.day	29-SEP-21	29-SEP-21	R5605664

* Refer to Referenced Information for Qualifiers (if any) and Methodology.

ALS ENVIRONMENTAL ANALYTICAL REPORT

Sample Details/Parameters	Result	Qualifier*	D.L.	Units	Extracted	Analyzed	Batch
L2637534-40 DUSTFALL-GALLINGER ROAD							
Sampled By: Client on 31-AUG-21							
Matrix: Dustfall							
Total Metals in Dustfalls by ICPMS							
Molybdenum (Mo)-Total	0.00000813		0.00000085	mg/dm2.day	29-SEP-21	29-SEP-21	R5605664
Nickel (Ni)-Total	0.0000333		0.0000085	mg/dm2.day	29-SEP-21	29-SEP-21	R5605664
Phosphorus (P)-Total	0.0286		0.00085	mg/dm2.day	29-SEP-21	29-SEP-21	R5605664
Potassium (K)-Total	0.0400		0.00085	mg/dm2.day	29-SEP-21	29-SEP-21	R5605664
Selenium (Se)-Total	<0.000017		0.000017	mg/dm2.day	29-SEP-21	29-SEP-21	R5605664
Silicon (Si)-Total	0.00833		0.00085	mg/dm2.day	29-SEP-21	29-SEP-21	R5605664
Silver (Ag)-Total	0.00000082		0.00000017	mg/dm2.day	29-SEP-21	29-SEP-21	R5605664
Sodium (Na)-Total	0.00424		0.00085	mg/dm2.day	29-SEP-21	29-SEP-21	R5605664
Strontium (Sr)-Total	0.0000873		0.0000017	mg/dm2.day	29-SEP-21	29-SEP-21	R5605664
Thallium (Tl)-Total	<0.0000017		0.0000017	mg/dm2.day	29-SEP-21	29-SEP-21	R5605664
Tin (Sn)-Total	<0.0000017		0.0000017	mg/dm2.day	29-SEP-21	29-SEP-21	R5605664
Titanium (Ti)-Total	<0.00017		0.00017	mg/dm2.day	29-SEP-21	29-SEP-21	R5605664
Uranium (U)-Total	0.00000031		0.00000017	mg/dm2.day	29-SEP-21	29-SEP-21	R5605664
Vanadium (V)-Total	<0.000017		0.000017	mg/dm2.day	29-SEP-21	29-SEP-21	R5605664
Zinc (Zn)-Total	0.000606		0.000051	mg/dm2.day	29-SEP-21	29-SEP-21	R5605664
L2637534-41 DUSTFALL-TAIT ROAD (SOUTH)							
Sampled By: Client on 31-AUG-21							
Matrix: Dustfall							
Dustfalls-Total, Soluble, Insoluble +FV							
Total Dustfall	1.79		0.10	mg/dm2.day		04-OCT-21	R5608639
Total Insoluble Dustfall	0.98		0.10	mg/dm2.day		04-OCT-21	R5608639
Total Soluble Dustfall	0.81		0.10	mg/dm2.day		04-OCT-21	R5608639
Fixed Dustfall	0.62		0.10	mg/dm2.day		04-OCT-21	R5608639
Fixed Insoluble Dustfall	0.40		0.10	mg/dm2.day		04-OCT-21	R5608639
Fixed Soluble Dustfall	0.22		0.10	mg/dm2.day		04-OCT-21	R5608639
Volatile Dustfall	1.17		0.10	mg/dm2.day		04-OCT-21	R5608639
Volatile Insoluble Dustfall	0.58		0.10	mg/dm2.day		04-OCT-21	R5608639
Volatile Soluble Dustfall	0.59		0.10	mg/dm2.day		04-OCT-21	R5608639
Total Metals in Dustfalls by ICPMS							
Aluminum (Al)-Total	0.00713		0.0000391	mg/dm2.day	29-SEP-21	29-SEP-21	R5605664
Interval				days		29-SEP-21	R5604166
Antimony (Sb)-Total	0.0000024		0.0000013	mg/dm2.day	29-SEP-21	29-SEP-21	R5605664
Arsenic (As)-Total	0.0000059		0.0000013	mg/dm2.day	29-SEP-21	29-SEP-21	R5605664
Barium (Ba)-Total	0.000129		0.00000066	mg/dm2.day	29-SEP-21	29-SEP-21	R5605664
Beryllium (Be)-Total	<0.0000066		0.0000066	mg/dm2.day	29-SEP-21	29-SEP-21	R5605664
Bismuth (Bi)-Total	<0.0000066		0.0000066	mg/dm2.day	29-SEP-21	29-SEP-21	R5605664
Boron (B)-Total	0.00016		0.00013	mg/dm2.day	29-SEP-21	29-SEP-21	R5605664
Cadmium (Cd)-Total	0.00000148		0.00000066	mg/dm2.day	29-SEP-21	29-SEP-21	R5605664
Calcium (Ca)-Total	0.0354		0.00026	mg/dm2.day	29-SEP-21	29-SEP-21	R5605664
Chromium (Cr)-Total	0.0000140		0.0000066	mg/dm2.day	29-SEP-21	29-SEP-21	R5605664
Cobalt (Co)-Total	0.0000058		0.0000013	mg/dm2.day	29-SEP-21	29-SEP-21	R5605664
Copper (Cu)-Total	0.000172		0.0000066	mg/dm2.day	29-SEP-21	29-SEP-21	R5605664
Lead (Pb)-Total	0.0000189		0.00000066	mg/dm2.day	29-SEP-21	29-SEP-21	R5605664
Iron (Fe)-Total	0.00906		0.00039	mg/dm2.day	29-SEP-21	29-SEP-21	R5605664
Lithium (Li)-Total	<0.000066		0.000066	mg/dm2.day	29-SEP-21	29-SEP-21	R5605664
Magnesium (Mg)-Total	0.0122		0.000066	mg/dm2.day	29-SEP-21	29-SEP-21	R5605664

* Refer to Referenced Information for Qualifiers (if any) and Methodology.

ALS ENVIRONMENTAL ANALYTICAL REPORT

Sample Details/Parameters	Result	Qualifier*	D.L.	Units	Extracted	Analyzed	Batch
L2637534-41 DUSTFALL-TAIT ROAD (SOUTH)							
Sampled By: Client on 31-AUG-21							
Matrix: Dustfall							
Total Metals in Dustfalls by ICPMS							
Manganese (Mn)-Total	0.000625		0.0000013	mg/dm2.day	29-SEP-21	29-SEP-21	R5605664
Molybdenum (Mo)-Total	0.00000594		0.00000066	mg/dm2.day	29-SEP-21	29-SEP-21	R5605664
Nickel (Ni)-Total	0.0000536		0.0000066	mg/dm2.day	29-SEP-21	29-SEP-21	R5605664
Phosphorus (P)-Total	0.0330		0.00066	mg/dm2.day	29-SEP-21	29-SEP-21	R5605664
Potassium (K)-Total	0.0493		0.00066	mg/dm2.day	29-SEP-21	29-SEP-21	R5605664
Selenium (Se)-Total	<0.000013		0.000013	mg/dm2.day	29-SEP-21	29-SEP-21	R5605664
Silicon (Si)-Total	0.0110		0.00066	mg/dm2.day	29-SEP-21	29-SEP-21	R5605664
Silver (Ag)-Total	0.00000054		0.00000013	mg/dm2.day	29-SEP-21	29-SEP-21	R5605664
Sodium (Na)-Total	0.00666		0.00066	mg/dm2.day	29-SEP-21	29-SEP-21	R5605664
Strontium (Sr)-Total	0.000133		0.0000013	mg/dm2.day	29-SEP-21	29-SEP-21	R5605664
Thallium (Tl)-Total	<0.0000013		0.0000013	mg/dm2.day	29-SEP-21	29-SEP-21	R5605664
Tin (Sn)-Total	<0.0000013		0.0000013	mg/dm2.day	29-SEP-21	29-SEP-21	R5605664
Titanium (Ti)-Total	0.00018		0.00013	mg/dm2.day	29-SEP-21	29-SEP-21	R5605664
Uranium (U)-Total	0.00000030		0.00000013	mg/dm2.day	29-SEP-21	29-SEP-21	R5605664
Vanadium (V)-Total	0.000015		0.000013	mg/dm2.day	29-SEP-21	29-SEP-21	R5605664
Zinc (Zn)-Total	0.000572		0.000039	mg/dm2.day	29-SEP-21	29-SEP-21	R5605664

* Refer to Referenced Information for Qualifiers (if any) and Methodology.

Reference Information

Test Method References:

ALS Test Code	Matrix	Test Description	Method Reference**
AIR VOLUME-HIVOL-BU	Filter	Air volume (m3)	USEPA IO3.1
AIR VOLUME-M212 F-BU	Filter	Air volume (m3)	EPA QA Guidance Document 2.12
DUSTFALLS-ALL-DM2-VA	Dustfall	Dustfalls-Total, Soluble, Insoluble +FV	BC LAB MANUAL - PARTICULATE

This analysis is carried out using procedures modified from British Columbia Environmental Manual "Particulate."
Particulates or "Dustfalls" are determined gravimetrically. Total Insoluble and Soluble Dustfalls are determined by filtering a sample through a 0.45 um membrane filter and drying the filter and filtrate at 104 C, followed by ignition at 550 C. The remaining residue after 550 C represents the fixed portion and the weight lost on ignition represents the volatile portion. The sum of all fixed and volatile portions on both Insoluble and Soluble portions represents Total Dustfalls.

MET-DUST(DM2)-MS-VA	Dustfall	Total Metals in Dustfalls by ICPMS	EPA 6020A

This analysis is carried out using procedures adapted from "Standard Methods for the Examination of Water and Wastewater" published by the American Public Health Association, and with procedures adapted from "Test Methods for Evaluating Solid Waste" SW-846 published by the United States Environmental Protection Agency (EPA). Instrumental analysis is by inductively coupled plasma - mass spectrometry (EPA Method 6020A).

MET-IO3.5-MS-BU	Filter	Metals on High Volume Filter by ICPMS	IO3.5

After weighing (if required), hivol filters are sub-sampled and leached with nitric acid to extract available metal analytes. After dilution, the extracts are submitted to the ICPMS instrument for analysis.

PART-HIVOL-GRAV-BU	Filter	Particulate on High Volume Filter	USEPA IO3.1
PART-M212 F-GRAV-BU	Filter	PM via Gravimetric Analysis	EPA QA Guidance Document 2.12

The particulate matter collected onto tare-weighed 47mm Teflon Disc filter media is desiccated then brought to a constant weight on an analytical balance. Results are presented in ug (per filter). An air volume can be included to allow for reporting in ug/m3.

** ALS test methods may incorporate modifications from specified reference methods to improve performance.

The last two letters of the above test code(s) indicate the laboratory that performed analytical analysis for that test. Refer to the list below:

Laboratory Definition Code	Laboratory Location
BU	ALS ENVIRONMENTAL - BURLINGTON, ONTARIO, CANADA
VA	ALS ENVIRONMENTAL - VANCOUVER, BRITISH COLUMBIA, CANADA

Chain of Custody Numbers:

GLOSSARY OF REPORT TERMS

Surrogates are compounds that are similar in behaviour to target analyte(s), but that do not normally occur in environmental samples. For applicable tests, surrogates are added to samples prior to analysis as a check on recovery. In reports that display the D.L. column, laboratory objectives for surrogates are listed there.
mg/kg - milligrams per kilogram based on dry weight of sample
mg/kg wwt - milligrams per kilogram based on wet weight of sample
mg/kg lwt - milligrams per kilogram based on lipid-adjusted weight
mg/L - unit of concentration based on volume, parts per million.
< - Less than.
D.L. - The reporting limit.
N/A - Result not available. Refer to qualifier code and definition for explanation.

Test results reported relate only to the samples as received by the laboratory.
UNLESS OTHERWISE STATED, ALL SAMPLES WERE RECEIVED IN ACCEPTABLE CONDITION.
Analytical results in unsigned test reports with the DRAFT watermark are subject to change, pending final QC review.

Quality Control Report

Workorder: L2637534 Report Date: 05-OCT-21

Client: New Gold Inc. Rainy River Project
5967 Highway 11/71 P.O. Box 5
Emo ON P0W 1E0

Contact: Sarah Flesher

Test	Matrix	Reference	Result	Qualifier	Units	RPD	Limit	Analyzed
MET-IO3.5-MS-BU	**Filter**							
Batch R5593137								
WG3622053-3 DUP		**L2637534-1**						
Arsenic (As)		<3.0	<3.0	RPD-NA	ug	N/A	20	22-SEP-21
Cadmium (Cd)		<2.0	<2.0	RPD-NA	ug	N/A	20	22-SEP-21
Cobalt (Co)		<2.0	<2.0	RPD-NA	ug	N/A	20	22-SEP-21
Chromium (Cr)		<5.0	<5.0	RPD-NA	ug	N/A	20	22-SEP-21
Copper (Cu)		126	111		ug	13	20	22-SEP-21
Iron (Fe)		1500	1440		ug	4.3	25	22-SEP-21
Manganese (Mn)		59.9	54.5		ug	9.4	20	22-SEP-21
Nickel (Ni)		<3.0	<3.0	RPD-NA	ug	N/A	20	22-SEP-21
Lead (Pb)		<3.0	<3.0	RPD-NA	ug	N/A	20	22-SEP-21
Selenium (Se)		<10	<10	RPD-NA	ug	N/A	20	22-SEP-21
Vanadium (V)		<5.0	<5.0	RPD-NA	ug	N/A	20	22-SEP-21
Zinc (Zn)		33.3	31.6		ug	5.3	20	22-SEP-21
WG3622053-2 LCS								
Arsenic (As)			98.0		%		80-120	22-SEP-21
Cadmium (Cd)			102.8		%		80-120	22-SEP-21
Cobalt (Co)			104.0		%		80-120	22-SEP-21
Chromium (Cr)			97.3		%		80-120	22-SEP-21
Copper (Cu)			98.5		%		80-120	22-SEP-21
Iron (Fe)			104.6		%		80-120	22-SEP-21
Manganese (Mn)			104.0		%		80-120	22-SEP-21
Nickel (Ni)			99.3		%		80-120	22-SEP-21
Lead (Pb)			101.0		%		80-120	22-SEP-21
Selenium (Se)			105.0		%		80-120	22-SEP-21
Vanadium (V)			99.2		%		80-120	22-SEP-21
Zinc (Zn)			101.0		%		80-120	22-SEP-21
WG3622053-1 MB								
Arsenic (As)			<3.0		ug		3	22-SEP-21
Cadmium (Cd)			<0.027		ug		0.027	22-SEP-21
Cobalt (Co)			<0.030		ug		0.03	22-SEP-21
Chromium (Cr)			<3.4		ug		3.4	22-SEP-21
Copper (Cu)			<1.0		ug		1	22-SEP-21
Iron (Fe)			<12		ug		12	22-SEP-21
Manganese (Mn)			<0.45		ug		0.45	22-SEP-21
Nickel (Ni)			<0.25		ug		0.25	22-SEP-21
Lead (Pb)			<0.12		ug		0.12	22-SEP-21

Quality Control Report

Test	Matrix	Reference	Result	Qualifier	Units	RPD	Limit	Analyzed
MET-IO3.5-MS-BU	**Filter**							
Batch R5593137								
WG3622053-1 MB								
Selenium (Se)			<1.3		ug		1.25	22-SEP-21
Vanadium (V)			<5.0		ug		10	22-SEP-21
Zinc (Zn)			<4.5		ug		4.5	22-SEP-21
WG3622053-4 MS		**L2637534-1**						
Arsenic (As)			96.9		%		75-125	22-SEP-21
Cadmium (Cd)			101.0		%		75-125	22-SEP-21
Cobalt (Co)			97.9		%		75-125	22-SEP-21
Chromium (Cr)			95.3		%		75-125	22-SEP-21
Copper (Cu)			N/A	MS-B	%		-	22-SEP-21
Iron (Fe)			N/A	MS-B	%		-	22-SEP-21
Manganese (Mn)			N/A	MS-B	%		-	22-SEP-21
Nickel (Ni)			95.6		%		75-125	22-SEP-21
Lead (Pb)			98.1		%		75-125	22-SEP-21
Selenium (Se)			106.7		%		75-125	22-SEP-21
Vanadium (V)			96.4		%		75-125	22-SEP-21
Zinc (Zn)			101.0		%		75-125	22-SEP-21
PART-HIVOL-GRAV-BU	**Filter**							
Batch R5589238								
WG3621365-25 DUP		**L2637534-1**						
Total particulate		130000	130000		ug	0.0	5	21-SEP-21
WG3621365-21 MB								
Total particulate			<100		ug		100	21-SEP-21
PART-M212 F-GRAV-BU	**Filter**							
Batch R5604330								
WG3627493-3 DUP		**L2637534-16**						
Total particulate		2410	2410		ug	0.0	10	26-SEP-21
WG3627493-1 MB								
Total particulate			<15		ug		15	26-SEP-21
WG3627493-2 MB								
Total particulate			<15		ug		15	26-SEP-21
DUSTFALLS-ALL-DM2-VA	**Dustfall**							
Batch R5608639								
WG3627516-1 MB								
Total Dustfall			<0.10		mg/dm2.day		0.1	04-OCT-21
Total Insoluble Dustfall			<0.10		mg/dm2.day		0.1	04-OCT-21

Quality Control Report

Test	Matrix	Reference	Result	Qualifier	Units	RPD	Limit	Analyzed
DUSTFALLS-ALL-DM2-VA	**Dustfall**							
Batch R5608639								
WG3627516-1 MB								
Total Soluble Dustfall			<0.10		mg/dm2.day		0.1	04-OCT-21
Fixed Dustfall			<0.10		mg/dm2.day		0.1	04-OCT-21
Fixed Insoluble Dustfall			<0.10		mg/dm2.day		0.1	04-OCT-21
Fixed Soluble Dustfall			<0.10		mg/dm2.day		0.1	04-OCT-21
Volatile Dustfall			<0.10		mg/dm2.day		0.1	04-OCT-21
Volatile Insoluble Dustfall			<0.10		mg/dm2.day		0.1	04-OCT-21
Volatile Soluble Dustfall			<0.10		mg/dm2.day		0.1	04-OCT-21
MET-DUST(DM2)-MS-VA	**Dustfall**							
Batch R5605664								
WG3627106-3 DUP		**L2637534-31**						
Aluminum (Al)-Total		0.0419	0.0374		mg/dm2.day	11	20	29-SEP-21
Antimony (Sb)-Total		0.0000058	0.0000060		mg/dm2.day	4.4	20	29-SEP-21
Arsenic (As)-Total		0.0000274	0.0000274		mg/dm2.day	0.2	20	29-SEP-21
Barium (Ba)-Total		0.000175	0.000169		mg/dm2.day	3.6	20	29-SEP-21
Beryllium (Be)-Total		<0.0000063	<0.0000063	RPD-NA	mg/dm2.day	N/A	20	29-SEP-21
Bismuth (Bi)-Total		0.0000066	<0.0000063	RPD-NA	mg/dm2.day	N/A	20	29-SEP-21
Boron (B)-Total		<0.00013	<0.00013	RPD-NA	mg/dm2.day	N/A	20	29-SEP-21
Calcium (Ca)-Total		0.102	0.0980		mg/dm2.day	3.5	20	29-SEP-21
Chromium (Cr)-Total		0.0000478	0.0000433		mg/dm2.day	10	20	29-SEP-21
Cobalt (Co)-Total		0.0000104	0.0000094		mg/dm2.day	11	20	29-SEP-21
Copper (Cu)-Total		0.000195	0.000200		mg/dm2.day	2.7	20	29-SEP-21
Lead (Pb)-Total		0.000301	0.000280		mg/dm2.day	6.9	20	29-SEP-21
Iron (Fe)-Total		0.0324	0.0288		mg/dm2.day	12	20	29-SEP-21
Lithium (Li)-Total		<0.000063	<0.000063	RPD-NA	mg/dm2.day	N/A	20	29-SEP-21
Magnesium (Mg)-Total		0.0245	0.0227		mg/dm2.day	7.6	20	29-SEP-21
Manganese (Mn)-Total		0.00224	0.00219		mg/dm2.day	2.4	20	29-SEP-21
Molybdenum (Mo)-Total		0.00000434	0.00000367		mg/dm2.day	17	20	29-SEP-21
Nickel (Ni)-Total		0.0000356	0.0000322		mg/dm2.day	10	20	29-SEP-21
Phosphorus (P)-Total		0.00249	0.00252		mg/dm2.day	1.2	20	29-SEP-21
Potassium (K)-Total		0.0119	0.0112		mg/dm2.day	5.8	20	29-SEP-21
Selenium (Se)-Total		<0.000013	<0.000013	RPD-NA	mg/dm2.day	N/A	20	29-SEP-21
Silicon (Si)-Total		0.0537	0.0509		mg/dm2.day	5.2	20	29-SEP-21
Silver (Ag)-Total		0.00000727	0.00000734		mg/dm2.day	1.0	20	29-SEP-21
Sodium (Na)-Total		0.00543	0.00518		mg/dm2.day	4.6	20	29-SEP-21

Quality Control Report

Test	Matrix	Reference	Result	Qualifier	Units	RPD	Limit	Analyzed
MET-DUST(DM2)-MS-VA	**Dustfall**							
Batch R5605664								
WG3627106-3 DUP		**L2637534-31**						
Strontium (Sr)-Total		0.000242	0.000218		mg/dm2.day	10	20	29-SEP-21
Thallium (Tl)-Total		<0.0000013	<0.0000013	RPD-NA	mg/dm2.day	N/A	20	29-SEP-21
Tin (Sn)-Total		<0.0000013	<0.0000013	RPD-NA	mg/dm2.day	N/A	20	29-SEP-21
Titanium (Ti)-Total		0.00074	0.00064		mg/dm2.day	15	20	29-SEP-21
Uranium (U)-Total		0.00000078	0.00000067		mg/dm2.day	14	20	29-SEP-21
Vanadium (V)-Total		0.000048	0.000044		mg/dm2.day	8.6	20	29-SEP-21
WG3627106-2 LCS								
Aluminum (Al)-Total			109.6		%		80-120	29-SEP-21
Antimony (Sb)-Total			118.2		%		80-120	29-SEP-21
Arsenic (As)-Total			111.1		%		80-120	29-SEP-21
Barium (Ba)-Total			105.4		%		80-120	29-SEP-21
Beryllium (Be)-Total			112.1		%		80-120	29-SEP-21
Bismuth (Bi)-Total			94.8		%		80-120	29-SEP-21
Boron (B)-Total			102.3		%		80-120	29-SEP-21
Cadmium (Cd)-Total			110.5		%		80-120	29-SEP-21
Calcium (Ca)-Total			112.6		%		80-120	29-SEP-21
Chromium (Cr)-Total			108.4		%		80-120	29-SEP-21
Cobalt (Co)-Total			110.9		%		80-120	29-SEP-21
Copper (Cu)-Total			108.3		%		80-120	29-SEP-21
Lead (Pb)-Total			115.6		%		80-120	29-SEP-21
Iron (Fe)-Total			104.2		%		80-120	29-SEP-21
Lithium (Li)-Total			108.6		%		80-120	29-SEP-21
Magnesium (Mg)-Total			107.9		%		80-120	29-SEP-21
Manganese (Mn)-Total			106.4		%		80-120	29-SEP-21
Molybdenum (Mo)-Total			111.3		%		80-120	29-SEP-21
Nickel (Ni)-Total			106.1		%		80-120	29-SEP-21
Phosphorus (P)-Total			111.9		%		80-120	29-SEP-21
Potassium (K)-Total			110.4		%		80-120	29-SEP-21
Silicon (Si)-Total			105.7		%		80-120	29-SEP-21
Silver (Ag)-Total			113.2		%		80-120	29-SEP-21
Sodium (Na)-Total			111.5		%		80-120	29-SEP-21
Strontium (Sr)-Total			116.5		%		80-120	29-SEP-21
Thallium (Tl)-Total			104.8		%		80-120	29-SEP-21
Tin (Sn)-Total			109.5		%		80-120	29-SEP-21

Quality Control Report

Test	Matrix	Reference	Result	Qualifier	Units	RPD	Limit	Analyzed
MET-DUST(DM2)-MS-VA	**Dustfall**							
Batch R5605664								
WG3627106-2 LCS								
Titanium (Ti)-Total			112.5		%		80-120	29-SEP-21
Uranium (U)-Total			117.2		%		80-120	29-SEP-21
Vanadium (V)-Total			109.7		%		80-120	29-SEP-21
Zinc (Zn)-Total			117.7		%		80-120	29-SEP-21
WG3627106-1 MB								
Aluminum (Al)-Total			<0.000079		mg/dm2.day		0.000079	29-SEP-21
Antimony (Sb)-Total			<0.0000026		mg/dm2.day		0.0000026	29-SEP-21
Arsenic (As)-Total			<0.0000026		mg/dm2.day		0.0000026	29-SEP-21
Barium (Ba)-Total			<0.0000013		mg/dm2.day		0.0000013	29-SEP-21
Beryllium (Be)-Total			<0.000013		mg/dm2.day		0.000013	29-SEP-21
Bismuth (Bi)-Total			<0.000013		mg/dm2.day		0.000013	29-SEP-21
Boron (B)-Total			<0.00026		mg/dm2.day		0.00026	29-SEP-21
Cadmium (Cd)-Total			<0.0000013		mg/dm2.day		0.0000013	29-SEP-21
Calcium (Ca)-Total			<0.00052		mg/dm2.day		0.00052	29-SEP-21
Chromium (Cr)-Total			<0.000013		mg/dm2.day		0.000013	29-SEP-21
Cobalt (Co)-Total			<0.0000026		mg/dm2.day		0.0000026	29-SEP-21
Copper (Cu)-Total			<0.000013		mg/dm2.day		0.000013	29-SEP-21
Lead (Pb)-Total			<0.0000013		mg/dm2.day		0.0000013	29-SEP-21
Iron (Fe)-Total			<0.00079		mg/dm2.day		0.00079	29-SEP-21
Lithium (Li)-Total			<0.00013		mg/dm2.day		0.00013	29-SEP-21
Magnesium (Mg)-Total			<0.00013		mg/dm2.day		0.00013	29-SEP-21
Manganese (Mn)-Total			<0.0000026		mg/dm2.day		0.0000026	29-SEP-21
Molybdenum (Mo)-Total			<0.0000013		mg/dm2.day		0.0000013	29-SEP-21
Nickel (Ni)-Total			<0.000013		mg/dm2.day		0.000013	29-SEP-21
Phosphorus (P)-Total			<0.0013		mg/dm2.day		0.0013	29-SEP-21
Potassium (K)-Total			<0.0013		mg/dm2.day		0.0013	29-SEP-21
Selenium (Se)-Total			<0.000026		mg/dm2.day		0.000026	29-SEP-21
Silicon (Si)-Total			<0.0013		mg/dm2.day		0.0013	29-SEP-21
Silver (Ag)-Total			<0.0000002		mg/dm2.day		0.00000026	29-SEP-21
Sodium (Na)-Total			<0.0013		mg/dm2.day		0.0013	29-SEP-21
Strontium (Sr)-Total			<0.0000026		mg/dm2.day		0.0000026	29-SEP-21
Thallium (Tl)-Total			<0.0000026		mg/dm2.day		0.0000026	29-SEP-21
Tin (Sn)-Total			<0.0000026		mg/dm2.day		0.0000026	29-SEP-21
Titanium (Ti)-Total			<0.00026		mg/dm2.day		0.00026	29-SEP-21

Quality Control Report

Test	Matrix	Reference	Result	Qualifier	Units	RPD	Limit	Analyzed
MET-DUST(DM2)-MS-VA	**Dustfall**							
Batch R5605664								
WG3627106-1 MB								
Uranium (U)-Total			<0.0000002		mg/dm2.day		0.00000026	29-SEP-21
Vanadium (V)-Total			<0.000026		mg/dm2.day		0.000026	29-SEP-21
Zinc (Zn)-Total			<0.000079		mg/dm2.day		0.000079	29-SEP-21

Quality Control Report

Legend:

Limit	ALS Control Limit (Data Quality Objectives)
DUP	Duplicate
RPD	Relative Percent Difference
N/A	Not Available
LCS	Laboratory Control Sample
SRM	Standard Reference Material
MS	Matrix Spike
MSD	Matrix Spike Duplicate
ADE	Average Desorption Efficiency
MB	Method Blank
IRM	Internal Reference Material
CRM	Certified Reference Material
CCV	Continuing Calibration Verification
CVS	Calibration Verification Standard
LCSD	Laboratory Control Sample Duplicate

Sample Parameter Qualifier Definitions:

Qualifier	Description
MS-B	Matrix Spike recovery could not be accurately calculated due to high analyte background in sample.
RPD-NA	Relative Percent Difference Not Available due to result(s) being less than detection limit.

Hold Time Exceedances:

All test results reported with this submission were conducted within ALS recommended hold times.

ALS recommended hold times may vary by province. They are assigned to meet known provincial and/or federal government requirements. In the absence of regulatory hold times, ALS establishes recommendations based on guidelines published by the US EPA, APHA Standard Methods, or Environment Canada (where available). For more information, please contact ALS.

The ALS Quality Control Report is provided to ALS clients upon request. ALS includes comprehensive QC checks with every analysis to ensure our high standards of quality are met. Each QC result has a known or expected target value, which is compared against pre-determined data quality objectives to provide confidence in the accuracy of associated test results.

Please note that this report may contain QC results from anonymous Sample Duplicates and Matrix Spikes that do not originate from this Work Order.

ALS Environmental

Chain of Custody / Analytical Request Form
1435 Norjohn Court, Unit 1, Burlington, Ontario, Canada, L7L 0E6
Tel +1-905-331-3111 Fax +1-905-331-4567 www.alsglobal.com

L2637534-COFC

Report To		Report Format / Distribution		Service Requested
Company:	New Gold Inc.	☑ Standard ☐ Other:		☑ Regular Service
Contact:	Sarah Flesher	☑ PDF ☑ Excel ☐ Digital ☐ Fax		☐ Rush Service (with prior consultation) - surcharge applies
Address:	24 Marr Rd. Barwick ON P0W 1A0	Email 1:	sarah.flesher@newgold.com	☐ Other - Please contact ALS
Phone:	807-234-8200 ext. 8049 Fax:	Email 2:		
Invoice To	Same as Report ? ☑ Yes ☐ No	Client / Project Information		
Company:		Job #:	Air Quality	
Contact:		Location:		
Address:		PO:	450000093	
Phone:	Fax:	Sampled by:		
Lab Work Order #		ALS Contact:		

Sample #	Sample Identification (This description will appear on the report)	Date (dd-mmm-yy)	Time (hh:mm)	Sample Type	TSP and Metals	Pm 2.5	Dustfall Incl. volatile								Hazardous? Provide Deta	Highly Contaminated?	Number of Containers
1	SOUTH-TSP-376	2-Aug-2021	12:00	Air	X												
2	SOUTH-TSP-377	8-Aug-2021	12:00	Air	X												
3	SOUTH-TSP-378	14-Aug-2021	12:00	Air	X												
4	SOUTH-TSP-379	20-Aug-2021	12:00	Air	X												
5	SOUTH-TSP-380	26-Aug-2021	12:00	Air	X												
6	NORTH-TSP-376	2-Aug-2021	12:00	Air	X												
7	NORTH-TSP-377	8-Aug-2021	12:00	Air	X												
8	NORTH-TSP-378	14-Aug-2021	12:00	Air	X												
9	NORTH-TSP-379	20-Aug-2021	12:00	Air	X												
10	NORTH-TSP-380	26-Aug-2021	12:00	Air	X												
11	NORTHWEST-TSP-376	2-Aug-2021	12:00	Air	X												
12	NORTHWEST-TSP-377	8-Aug-2021	12:00	Air	X												
13	NORTHWEST-TSP-378	14-Aug-2021	12:00	Air	X												
14	NORTHWEST-TSP-379	20-Aug-2021	12:00	Air	X												
15	NORTHWEST-TSP-380	26-Aug-2021	12:00	Air	X												
16	SOUTH-PM2.5-376	2-Aug-2021	12:00	Air		X											
17	SOUTH-PM2.5-377	8-Aug-2021	12:00	Air		X											
18	SOUTH-PM2.5-378	14-Aug-2021	12:00	Air		X											
19	SOUTH-PM2.5-379	20-Aug-2021	12:00	Air		X											
20	SOUTH-PM2.5-380	26-Aug-2021	12:00	Air		X											
21	NORTH-PM2.5-376	2-Aug-2021	12:00	Air		X											
22	NORTH-PM2.5-377	8-Aug-2021	12:00	Air		X											
23	NORTH-PM2.5-378	14-Aug-2021	12:00	Air		X											
24	NORTH-PM2.5-379	20-Aug-2021	12:00	Air		X											
25	NORTH-PM2.5-380	26-Aug-2021	12:00	Air		X											
26	NORTHWEST-PM2.5-376	2-Aug-2021	12:00	Air		X											
27	NORTHWEST-PM2.5-377	8-Aug-2021	12:00	Air		X											
28	NORTHWEST-PM2.5-378	14-Aug-2021	12:00	Air		X											
29	NORTHWEST-PM2.5-379	20-Aug-2021	12:00	Air		X											
30	NORTHWEST-TSP-380	26-Aug-2021	12:00	Air		X											
31	NOP1-Dustfall-8	31-Aug-2021	12:00	Air			X										
32	CP1-Dustfall-8	31-Aug-2021	12:00	Air			X										
33	WCP1-Dustfall-8	31-Aug-2021	12:00	Air			X										
34	GH1-Dustfall-8	31-Aug-2021	12:00	Air			X										
35	SPP1-Dustfall-33	4-Aug-2021	12:00	Air			X										
36	SPP1-Dustfall-34	11-Aug-2021	12:00	Air			X										
37	SPP1-Dustfall-35	18-Aug-2021	12:00	Air			X										
38	SPP1-Dustfall-36	25-Aug-2021	12:00	Air			X										
39	SPP1-Dustfall-37	1-Sep-2021	12:00	Air			X										
40	Dustfall - Gallinger Road	31-Aug-2021	12:00	Air			X										
41	Dustfall - Tait Road (South)	31-Aug-2021	12:00	Air			X										
	Dustfall- Northwest	31-Aug-2021	12:00	Air			X										

Analysis Request

Special Instructions / Regulations / Hazardous Details

Please Note: Dustfall canisters are empty/ only partially full, please follow-through with sample analysis

By the use of this form the user acknowledges and agrees with the Terms and Conditions as provided by ALS

Released by:	Date (dd-mmm-yy)	Time (hh-mm)	Received by:	Date:	Time:	Temperature:	Verified by:	Date:	Time:	Observations Yes / No ? If Yes add SIF
	Sep-3-2021	11:00	AARON BURTON	9-Sept 2021	15:00	20.9°C °C				

[redacted]

New Gold Inc. Rainy River Project
ATTN: Sarah Flesher
5967 Highway 11/71
P.O. Box 5
Emo ON P0W 1E0

Date Received: 07-OCT-21
Report Date: 01-NOV-21 10:06 (MT)
Version: FINAL

Client Phone: 807-234-8200

Certificate of Analysis

Lab Work Order #: L2649276
Project P.O. #: 4500050093
Job Reference:
C of C Numbers:
Legal Site Desc:

[redacted]

[This report shall not be reproduced except in full without the written authority of the Laboratory.]

ADDRESS: 1435 Norjohn Court, Unit 1, Burlington, ON, L7L 0E6 Canada | Phone: +1 905 331 3111 | Fax: +1 905 331 4567

[redacted]

ALS ENVIRONMENTAL ANALYTICAL REPORT

Sample Details/Parameters	Result	Qualifier*	D.L.	Units	Extracted	Analyzed	Batch
L2649276-1 SOUTH-TSP-381							
Sampled By: Client on 01-SEP-21							
Matrix: Hi Vol Filter							
Miscellaneous Parameters							
Total particulate	31000		2300	ug		21-OCT-21	R5625888
Metals on High Volume Filter by ICPMS							
Arsenic (As)	<3.0		3.0	ug	22-OCT-21	22-OCT-21	R5626710
Cadmium (Cd)	<2.0		2.0	ug	22-OCT-21	22-OCT-21	R5626710
Cobalt (Co)	<2.0		2.0	ug	22-OCT-21	22-OCT-21	R5626710
Chromium (Cr)	<5.0		5.0	ug	22-OCT-21	22-OCT-21	R5626710
Copper (Cu)	75.2		4.0	ug	22-OCT-21	22-OCT-21	R5626710
Iron (Fe)	738		20	ug	22-OCT-21	22-OCT-21	R5626710
Manganese (Mn)	16.8		1.0	ug	22-OCT-21	22-OCT-21	R5626710
Nickel (Ni)	<3.0		3.0	ug	22-OCT-21	22-OCT-21	R5626710
Lead (Pb)	<3.0		3.0	ug	22-OCT-21	22-OCT-21	R5626710
Selenium (Se)	<10		10	ug	22-OCT-21	22-OCT-21	R5626710
Vanadium (V)	<5.0		5.0	ug	22-OCT-21	22-OCT-21	R5626710
Zinc (Zn)	10.3		5.0	ug	22-OCT-21	22-OCT-21	R5626710
L2649276-2 SOUTH-TSP-382							
Sampled By: Client on 07-SEP-21							
Matrix: Hi Vol Filter							
Miscellaneous Parameters							
Total particulate	27300		2300	ug		21-OCT-21	R5625888
Metals on High Volume Filter by ICPMS							
Arsenic (As)	<3.0		3.0	ug	22-OCT-21	22-OCT-21	R5626710
Cadmium (Cd)	<2.0		2.0	ug	22-OCT-21	22-OCT-21	R5626710
Cobalt (Co)	<2.0		2.0	ug	22-OCT-21	22-OCT-21	R5626710
Chromium (Cr)	<5.0		5.0	ug	22-OCT-21	22-OCT-21	R5626710
Copper (Cu)	105		4.0	ug	22-OCT-21	22-OCT-21	R5626710
Iron (Fe)	267		20	ug	22-OCT-21	22-OCT-21	R5626710
Manganese (Mn)	9.9		1.0	ug	22-OCT-21	22-OCT-21	R5626710
Nickel (Ni)	<3.0		3.0	ug	22-OCT-21	22-OCT-21	R5626710
Lead (Pb)	<3.0		3.0	ug	22-OCT-21	22-OCT-21	R5626710
Selenium (Se)	<10		10	ug	22-OCT-21	22-OCT-21	R5626710
Vanadium (V)	<5.0		5.0	ug	22-OCT-21	22-OCT-21	R5626710
Zinc (Zn)	8.0		5.0	ug	22-OCT-21	22-OCT-21	R5626710
L2649276-3 SOUTH-TSP-383							
Sampled By: Client on 13-SEP-21							
Matrix: Hi Vol Filter							
Miscellaneous Parameters							
Total particulate	26900		2300	ug		21-OCT-21	R5625888
Metals on High Volume Filter by ICPMS							
Arsenic (As)	<3.0		3.0	ug	22-OCT-21	22-OCT-21	R5626710
Cadmium (Cd)	<2.0		2.0	ug	22-OCT-21	22-OCT-21	R5626710
Cobalt (Co)	<2.0		2.0	ug	22-OCT-21	22-OCT-21	R5626710
Chromium (Cr)	<5.0		5.0	ug	22-OCT-21	22-OCT-21	R5626710
Copper (Cu)	75.2		4.0	ug	22-OCT-21	22-OCT-21	R5626710
Iron (Fe)	263		20	ug	22-OCT-21	22-OCT-21	R5626710
Manganese (Mn)	8.0		1.0	ug	22-OCT-21	22-OCT-21	R5626710
Nickel (Ni)	<3.0		3.0	ug	22-OCT-21	22-OCT-21	R5626710
Lead (Pb)	<3.0		3.0	ug	22-OCT-21	22-OCT-21	R5626710
Selenium (Se)	<10		10	ug	22-OCT-21	22-OCT-21	R5626710
Vanadium (V)	<5.0		5.0	ug	22-OCT-21	22-OCT-21	R5626710
Zinc (Zn)	8.6		5.0	ug	22-OCT-21	22-OCT-21	R5626710

* Refer to Referenced Information for Qualifiers (if any) and Methodology.

ALS ENVIRONMENTAL ANALYTICAL REPORT

Sample Details/Parameters	Result	Qualifier*	D.L.	Units	Extracted	Analyzed	Batch
L2649276-4 SOUTH-TSP-384							
Sampled By: Client on 19-SEP-21							
Matrix: Hi Vol Filter							
Miscellaneous Parameters							
Total particulate	34500		2300	ug		21-OCT-21	R5625888
Metals on High Volume Filter by ICPMS							
Arsenic (As)	<3.0		3.0	ug	22-OCT-21	22-OCT-21	R5626710
Cadmium (Cd)	<2.0		2.0	ug	22-OCT-21	22-OCT-21	R5626710
Cobalt (Co)	<2.0		2.0	ug	22-OCT-21	22-OCT-21	R5626710
Chromium (Cr)	<5.0		5.0	ug	22-OCT-21	22-OCT-21	R5626710
Copper (Cu)	51.3		4.0	ug	22-OCT-21	22-OCT-21	R5626710
Iron (Fe)	392		20	ug	22-OCT-21	22-OCT-21	R5626710
Manganese (Mn)	16.4		1.0	ug	22-OCT-21	22-OCT-21	R5626710
Nickel (Ni)	<3.0		3.0	ug	22-OCT-21	22-OCT-21	R5626710
Lead (Pb)	<3.0		3.0	ug	22-OCT-21	22-OCT-21	R5626710
Selenium (Se)	<10		10	ug	22-OCT-21	22-OCT-21	R5626710
Vanadium (V)	<5.0		5.0	ug	22-OCT-21	22-OCT-21	R5626710
Zinc (Zn)	14.2		5.0	ug	22-OCT-21	22-OCT-21	R5626710
L2649276-5 SOUTH-TSP-385							
Sampled By: Client on 25-SEP-21							
Matrix: Hi Vol Filter							
Miscellaneous Parameters							
Total particulate	48300		2300	ug		21-OCT-21	R5625888
Metals on High Volume Filter by ICPMS							
Arsenic (As)	<3.0		3.0	ug	22-OCT-21	22-OCT-21	R5626710
Cadmium (Cd)	<2.0		2.0	ug	22-OCT-21	22-OCT-21	R5626710
Cobalt (Co)	<2.0		2.0	ug	22-OCT-21	22-OCT-21	R5626710
Chromium (Cr)	<5.0		5.0	ug	22-OCT-21	22-OCT-21	R5626710
Copper (Cu)	64.8		4.0	ug	22-OCT-21	22-OCT-21	R5626710
Iron (Fe)	788		20	ug	22-OCT-21	22-OCT-21	R5626710
Manganese (Mn)	35.9		1.0	ug	22-OCT-21	22-OCT-21	R5626710
Nickel (Ni)	<3.0		3.0	ug	22-OCT-21	22-OCT-21	R5626710
Lead (Pb)	<3.0		3.0	ug	22-OCT-21	22-OCT-21	R5626710
Selenium (Se)	<10		10	ug	22-OCT-21	22-OCT-21	R5626710
Vanadium (V)	<5.0		5.0	ug	22-OCT-21	22-OCT-21	R5626710
Zinc (Zn)	12.3		5.0	ug	22-OCT-21	22-OCT-21	R5626710
L2649276-6 NORTH-TSP-381							
Sampled By: Client on 01-SEP-21							
Matrix: Hi Vol Filter							
Miscellaneous Parameters							
Total particulate	27500		2300	ug		21-OCT-21	R5625888
Metals on High Volume Filter by ICPMS							
Arsenic (As)	<3.0		3.0	ug	22-OCT-21	22-OCT-21	R5626710
Cadmium (Cd)	<2.0		2.0	ug	22-OCT-21	22-OCT-21	R5626710
Cobalt (Co)	<2.0		2.0	ug	22-OCT-21	22-OCT-21	R5626710
Chromium (Cr)	<5.0		5.0	ug	22-OCT-21	22-OCT-21	R5626710
Copper (Cu)	68.4		4.0	ug	22-OCT-21	22-OCT-21	R5626710
Iron (Fe)	445		20	ug	22-OCT-21	22-OCT-21	R5626710
Manganese (Mn)	12.5		1.0	ug	22-OCT-21	22-OCT-21	R5626710
Nickel (Ni)	<3.0		3.0	ug	22-OCT-21	22-OCT-21	R5626710
Lead (Pb)	<3.0		3.0	ug	22-OCT-21	22-OCT-21	R5626710
Selenium (Se)	<10		10	ug	22-OCT-21	22-OCT-21	R5626710
Vanadium (V)	<5.0		5.0	ug	22-OCT-21	22-OCT-21	R5626710
Zinc (Zn)	10.2		5.0	ug	22-OCT-21	22-OCT-21	R5626710

* Refer to Referenced Information for Qualifiers (if any) and Methodology.

ALS ENVIRONMENTAL ANALYTICAL REPORT

Sample Details/Parameters	Result	Qualifier*	D.L.	Units	Extracted	Analyzed	Batch
L2649276-7 NORTH-TSP-382							
Sampled By: Client on 07-SEP-21							
Matrix: Hi Vol Filter							
Miscellaneous Parameters							
Total particulate	34900		2300	ug		21-OCT-21	R5625888
Metals on High Volume Filter by ICPMS							
Arsenic (As)	<3.0		3.0	ug	22-OCT-21	22-OCT-21	R5626710
Cadmium (Cd)	<2.0		2.0	ug	22-OCT-21	22-OCT-21	R5626710
Cobalt (Co)	<2.0		2.0	ug	22-OCT-21	22-OCT-21	R5626710
Chromium (Cr)	<5.0		5.0	ug	22-OCT-21	22-OCT-21	R5626710
Copper (Cu)	43.8		4.0	ug	22-OCT-21	22-OCT-21	R5626710
Iron (Fe)	319		20	ug	22-OCT-21	22-OCT-21	R5626710
Manganese (Mn)	14.1		1.0	ug	22-OCT-21	22-OCT-21	R5626710
Nickel (Ni)	<3.0		3.0	ug	22-OCT-21	22-OCT-21	R5626710
Lead (Pb)	<3.0		3.0	ug	22-OCT-21	22-OCT-21	R5626710
Selenium (Se)	<10		10	ug	22-OCT-21	22-OCT-21	R5626710
Vanadium (V)	<5.0		5.0	ug	22-OCT-21	22-OCT-21	R5626710
Zinc (Zn)	15.0		5.0	ug	22-OCT-21	22-OCT-21	R5626710
L2649276-8 NORTH-TSP-383							
Sampled By: Client on 13-SEP-21							
Matrix: Hi Vol Filter							
Miscellaneous Parameters							
Total particulate	28200		2300	ug		21-OCT-21	R5625888
Metals on High Volume Filter by ICPMS							
Arsenic (As)	<3.0		3.0	ug	22-OCT-21	22-OCT-21	R5626710
Cadmium (Cd)	<2.0		2.0	ug	22-OCT-21	22-OCT-21	R5626710
Cobalt (Co)	<2.0		2.0	ug	22-OCT-21	22-OCT-21	R5626710
Chromium (Cr)	<5.0		5.0	ug	22-OCT-21	22-OCT-21	R5626710
Copper (Cu)	65.3		4.0	ug	22-OCT-21	22-OCT-21	R5626710
Iron (Fe)	252		20	ug	22-OCT-21	22-OCT-21	R5626710
Manganese (Mn)	7.6		1.0	ug	22-OCT-21	22-OCT-21	R5626710
Nickel (Ni)	<3.0		3.0	ug	22-OCT-21	22-OCT-21	R5626710
Lead (Pb)	<3.0		3.0	ug	22-OCT-21	22-OCT-21	R5626710
Selenium (Se)	<10		10	ug	22-OCT-21	22-OCT-21	R5626710
Vanadium (V)	<5.0		5.0	ug	22-OCT-21	22-OCT-21	R5626710
Zinc (Zn)	7.7		5.0	ug	22-OCT-21	22-OCT-21	R5626710
L2649276-9 NORTH-TSP-384							
Sampled By: Client on 19-SEP-21							
Matrix: Hi Vol Filter							
Miscellaneous Parameters							
Total particulate	44800		2300	ug		21-OCT-21	R5625888
Metals on High Volume Filter by ICPMS							
Arsenic (As)	<3.0		3.0	ug	22-OCT-21	22-OCT-21	R5626710
Cadmium (Cd)	<2.0		2.0	ug	22-OCT-21	22-OCT-21	R5626710
Cobalt (Co)	<2.0		2.0	ug	22-OCT-21	22-OCT-21	R5626710
Chromium (Cr)	<5.0		5.0	ug	22-OCT-21	22-OCT-21	R5626710
Copper (Cu)	70.2		4.0	ug	22-OCT-21	22-OCT-21	R5626710
Iron (Fe)	518		20	ug	22-OCT-21	22-OCT-21	R5626710
Manganese (Mn)	20.0		1.0	ug	22-OCT-21	22-OCT-21	R5626710
Nickel (Ni)	<3.0		3.0	ug	22-OCT-21	22-OCT-21	R5626710
Lead (Pb)	<3.0		3.0	ug	22-OCT-21	22-OCT-21	R5626710
Selenium (Se)	<10		10	ug	22-OCT-21	22-OCT-21	R5626710
Vanadium (V)	<5.0		5.0	ug	22-OCT-21	22-OCT-21	R5626710
Zinc (Zn)	17.0		5.0	ug	22-OCT-21	22-OCT-21	R5626710

* Refer to Referenced Information for Qualifiers (if any) and Methodology.

ALS ENVIRONMENTAL ANALYTICAL REPORT

Sample Details/Parameters	Result	Qualifier*	D.L.	Units	Extracted	Analyzed	Batch
L2649276-10 NORTH-TSP-385							
Sampled By: Client on 25-SEP-21							
Matrix: Hi Vol Filter							
Miscellaneous Parameters							
Total particulate	90600		2300	ug		21-OCT-21	R5625888
Metals on High Volume Filter by ICPMS							
Arsenic (As)	<3.0		3.0	ug	22-OCT-21	22-OCT-21	R5626710
Cadmium (Cd)	<2.0		2.0	ug	22-OCT-21	22-OCT-21	R5626710
Cobalt (Co)	<2.0		2.0	ug	22-OCT-21	22-OCT-21	R5626710
Chromium (Cr)	<5.0		5.0	ug	22-OCT-21	22-OCT-21	R5626710
Copper (Cu)	66.6		4.0	ug	22-OCT-21	22-OCT-21	R5626710
Iron (Fe)	1810		20	ug	22-OCT-21	22-OCT-21	R5626710
Manganese (Mn)	69.8		1.0	ug	22-OCT-21	22-OCT-21	R5626710
Nickel (Ni)	<3.0		3.0	ug	22-OCT-21	22-OCT-21	R5626710
Lead (Pb)	3.1		3.0	ug	22-OCT-21	22-OCT-21	R5626710
Selenium (Se)	<10		10	ug	22-OCT-21	22-OCT-21	R5626710
Vanadium (V)	<5.0		5.0	ug	22-OCT-21	22-OCT-21	R5626710
Zinc (Zn)	47.7		5.0	ug	22-OCT-21	22-OCT-21	R5626710
L2649276-11 NORTHWEST-TSP-381							
Sampled By: Client on 01-SEP-21							
Matrix: Hi Vol Filter							
Miscellaneous Parameters							
Total particulate	72200		2300	ug		21-OCT-21	R5625888
Metals on High Volume Filter by ICPMS							
Arsenic (As)	<3.0		3.0	ug	22-OCT-21	22-OCT-21	R5626710
Cadmium (Cd)	<2.0		2.0	ug	22-OCT-21	22-OCT-21	R5626710
Cobalt (Co)	<2.0		2.0	ug	22-OCT-21	22-OCT-21	R5626710
Chromium (Cr)	<5.0		5.0	ug	22-OCT-21	22-OCT-21	R5626710
Copper (Cu)	376		4.0	ug	22-OCT-21	22-OCT-21	R5626710
Iron (Fe)	1770		20	ug	22-OCT-21	22-OCT-21	R5626710
Manganese (Mn)	41.3		1.0	ug	22-OCT-21	22-OCT-21	R5626710
Nickel (Ni)	<3.0		3.0	ug	22-OCT-21	22-OCT-21	R5626710
Lead (Pb)	<3.0		3.0	ug	22-OCT-21	22-OCT-21	R5626710
Selenium (Se)	<10		10	ug	22-OCT-21	22-OCT-21	R5626710
Vanadium (V)	<5.0		5.0	ug	22-OCT-21	22-OCT-21	R5626710
Zinc (Zn)	24.4		5.0	ug	22-OCT-21	22-OCT-21	R5626710
L2649276-12 NORTHWEST-TSP-382							
Sampled By: Client on 07-SEP-21							
Matrix: Hi Vol Filter							
Miscellaneous Parameters							
Total particulate	35200		2300	ug		21-OCT-21	R5625888
Metals on High Volume Filter by ICPMS							
Arsenic (As)	<3.0		3.0	ug	22-OCT-21	22-OCT-21	R5626710
Cadmium (Cd)	<2.0		2.0	ug	22-OCT-21	22-OCT-21	R5626710
Cobalt (Co)	<2.0		2.0	ug	22-OCT-21	22-OCT-21	R5626710
Chromium (Cr)	<5.0		5.0	ug	22-OCT-21	22-OCT-21	R5626710
Copper (Cu)	274		4.0	ug	22-OCT-21	22-OCT-21	R5626710
Iron (Fe)	482		20	ug	22-OCT-21	22-OCT-21	R5626710
Manganese (Mn)	15.0		1.0	ug	22-OCT-21	22-OCT-21	R5626710
Nickel (Ni)	<3.0		3.0	ug	22-OCT-21	22-OCT-21	R5626710
Lead (Pb)	<3.0		3.0	ug	22-OCT-21	22-OCT-21	R5626710
Selenium (Se)	<10		10	ug	22-OCT-21	22-OCT-21	R5626710
Vanadium (V)	<5.0		5.0	ug	22-OCT-21	22-OCT-21	R5626710
Zinc (Zn)	12.3		5.0	ug	22-OCT-21	22-OCT-21	R5626710

* Refer to Referenced Information for Qualifiers (if any) and Methodology.

ALS ENVIRONMENTAL ANALYTICAL REPORT

Sample Details/Parameters	Result	Qualifier*	D.L.	Units	Extracted	Analyzed	Batch
L2649276-13 NORTHWEST-TSP-383							
Sampled By: Client on 13-SEP-21							
Matrix: Hi Vol Filter							
Miscellaneous Parameters							
Total particulate	77700		2300	ug		21-OCT-21	R5625888
Metals on High Volume Filter by ICPMS							
Arsenic (As)	<3.0		3.0	ug	22-OCT-21	22-OCT-21	R5626710
Cadmium (Cd)	<2.0		2.0	ug	22-OCT-21	22-OCT-21	R5626710
Cobalt (Co)	<2.0		2.0	ug	22-OCT-21	22-OCT-21	R5626710
Chromium (Cr)	<5.0		5.0	ug	22-OCT-21	22-OCT-21	R5626710
Copper (Cu)	302		4.0	ug	22-OCT-21	22-OCT-21	R5626710
Iron (Fe)	1800		20	ug	22-OCT-21	22-OCT-21	R5626710
Manganese (Mn)	41.6		1.0	ug	22-OCT-21	22-OCT-21	R5626710
Nickel (Ni)	<3.0		3.0	ug	22-OCT-21	22-OCT-21	R5626710
Lead (Pb)	<3.0		3.0	ug	22-OCT-21	22-OCT-21	R5626710
Selenium (Se)	<10		10	ug	22-OCT-21	22-OCT-21	R5626710
Vanadium (V)	<5.0		5.0	ug	22-OCT-21	22-OCT-21	R5626710
Zinc (Zn)	21.0		5.0	ug	22-OCT-21	22-OCT-21	R5626710
L2649276-14 NORTHWEST-TSP-384							
Sampled By: Client on 19-SEP-21							
Matrix: Hi Vol Filter							
Miscellaneous Parameters							
Total particulate	49200		2300	ug		21-OCT-21	R5625888
Metals on High Volume Filter by ICPMS							
Arsenic (As)	<3.0		3.0	ug	22-OCT-21	22-OCT-21	R5626710
Cadmium (Cd)	<2.0		2.0	ug	22-OCT-21	22-OCT-21	R5626710
Cobalt (Co)	<2.0		2.0	ug	22-OCT-21	22-OCT-21	R5626710
Chromium (Cr)	<5.0		5.0	ug	22-OCT-21	22-OCT-21	R5626710
Copper (Cu)	211		4.0	ug	22-OCT-21	22-OCT-21	R5626710
Iron (Fe)	648		20	ug	22-OCT-21	22-OCT-21	R5626710
Manganese (Mn)	23.1		1.0	ug	22-OCT-21	22-OCT-21	R5626710
Nickel (Ni)	<3.0		3.0	ug	22-OCT-21	22-OCT-21	R5626710
Lead (Pb)	<3.0		3.0	ug	22-OCT-21	22-OCT-21	R5626710
Selenium (Se)	<10		10	ug	22-OCT-21	22-OCT-21	R5626710
Vanadium (V)	<5.0		5.0	ug	22-OCT-21	22-OCT-21	R5626710
Zinc (Zn)	16.2		5.0	ug	22-OCT-21	22-OCT-21	R5626710
L2649276-15 NORTHWEST-TSP-385							
Sampled By: Client on 25-SEP-21							
Matrix: Hi Vol Filter							
Miscellaneous Parameters							
Total particulate	55600		2300	ug		21-OCT-21	R5625888
Metals on High Volume Filter by ICPMS							
Arsenic (As)	<3.0		3.0	ug	22-OCT-21	22-OCT-21	R5626710
Cadmium (Cd)	<2.0		2.0	ug	22-OCT-21	22-OCT-21	R5626710
Cobalt (Co)	<2.0		2.0	ug	22-OCT-21	22-OCT-21	R5626710
Chromium (Cr)	<5.0		5.0	ug	22-OCT-21	22-OCT-21	R5626710
Copper (Cu)	329		4.0	ug	22-OCT-21	22-OCT-21	R5626710
Iron (Fe)	1100		20	ug	22-OCT-21	22-OCT-21	R5626710
Manganese (Mn)	25.7		1.0	ug	22-OCT-21	22-OCT-21	R5626710
Nickel (Ni)	<3.0		3.0	ug	22-OCT-21	22-OCT-21	R5626710
Lead (Pb)	<3.0		3.0	ug	22-OCT-21	22-OCT-21	R5626710
Selenium (Se)	<10		10	ug	22-OCT-21	22-OCT-21	R5626710
Vanadium (V)	<5.0		5.0	ug	22-OCT-21	22-OCT-21	R5626710
Zinc (Zn)	17.9		5.0	ug	22-OCT-21	22-OCT-21	R5626710

* Refer to Referenced Information for Qualifiers (if any) and Methodology.

ALS ENVIRONMENTAL ANALYTICAL REPORT

Sample Details/Parameters	Result	Qualifier*	D.L.	Units	Extracted	Analyzed	Batch
L2649276-16 TSP-TRAVEL BLANK							
Sampled By: Client on 05-OCT-21							
Matrix: Hi Vol Filter							
Miscellaneous Parameters							
Total particulate	<2300		2300	ug		21-OCT-21	R5625888
Metals on High Volume Filter by ICPMS							
Arsenic (As)	<3.0		3.0	ug	22-OCT-21	22-OCT-21	R5626710
Cadmium (Cd)	<2.0		2.0	ug	22-OCT-21	22-OCT-21	R5626710
Cobalt (Co)	<2.0		2.0	ug	22-OCT-21	22-OCT-21	R5626710
Chromium (Cr)	<5.0		5.0	ug	22-OCT-21	22-OCT-21	R5626710
Copper (Cu)	<4.0		4.0	ug	22-OCT-21	22-OCT-21	R5626710
Iron (Fe)	42		20	ug	22-OCT-21	22-OCT-21	R5626710
Manganese (Mn)	<1.0		1.0	ug	22-OCT-21	22-OCT-21	R5626710
Nickel (Ni)	<3.0		3.0	ug	22-OCT-21	22-OCT-21	R5626710
Lead (Pb)	<3.0		3.0	ug	22-OCT-21	22-OCT-21	R5626710
Selenium (Se)	<10		10	ug	22-OCT-21	22-OCT-21	R5626710
Vanadium (V)	<5.0		5.0	ug	22-OCT-21	22-OCT-21	R5626710
Zinc (Zn)	<5.0		5.0	ug	22-OCT-21	22-OCT-21	R5626710
L2649276-17 SOUTH-PM2.5-381							
Sampled By: Client on 01-SEP-21							
Matrix: 47mm Filter							
Miscellaneous Parameters							
Total particulate	195		15	ug		01-NOV-21	R5633462
L2649276-18 SOUTH-PM2.5-382							
Sampled By: Client on 07-SEP-21							
Matrix: 47mm Filter							
Miscellaneous Parameters							
Total particulate	95		15	ug		01-NOV-21	R5633462
L2649276-19 SOUTH-PM2.5-383							
Sampled By: Client on 13-SEP-21							
Matrix: 47mm Filter							
Miscellaneous Parameters							
Total particulate	68		15	ug		01-NOV-21	R5633462
L2649276-20 SOUTH-PM2.5-384							
Sampled By: Client on 19-SEP-21							
Matrix: 47mm Filter							
Miscellaneous Parameters							
Total particulate	196		15	ug		01-NOV-21	R5633462
L2649276-21 SOUTH-PM2.5-385							
Sampled By: Client on 25-SEP-21							
Matrix: 47mm Filter							
Miscellaneous Parameters							
Total particulate	82		15	ug		01-NOV-21	R5633462
L2649276-22 NORTH-PM2.5-381							
Sampled By: Client on 01-SEP-21							
Matrix: 47mm Filter							
Miscellaneous Parameters							
Total particulate	154		15	ug		01-NOV-21	R5633462
L2649276-23 NORTH-PM2.5-382							
Sampled By: Client on 07-SEP-21							
Matrix: 47mm Filter							
Miscellaneous Parameters							

* Refer to Referenced Information for Qualifiers (if any) and Methodology.

ALS ENVIRONMENTAL ANALYTICAL REPORT

Sample Details/Parameters	Result	Qualifier*	D.L.	Units	Extracted	Analyzed	Batch
L2649276-23 NORTH-PM2.5-382							
Sampled By: Client on 07-SEP-21							
Matrix: 47mm Filter							
Total particulate	87		15	ug		01-NOV-21	R5633462
L2649276-24 NORTH-PM2.5-383							
Sampled By: Client on 13-SEP-21							
Matrix: 47mm Filter							
Miscellaneous Parameters							
Total particulate	102		15	ug		01-NOV-21	R5633462
L2649276-25 NORTH-PM2.5-384							
Sampled By: Client on 19-SEP-21							
Matrix: 47mm Filter							
Miscellaneous Parameters							
Total particulate	121		15	ug		01-NOV-21	R5633462
L2649276-26 NORTH-PM2.5-385							
Sampled By: Client on 25-SEP-21							
Matrix: 47mm Filter							
Miscellaneous Parameters							
Total particulate	58		15	ug		01-NOV-21	R5633462
L2649276-27 NORTHWEST-PM2.5-381							
Sampled By: Client on 01-SEP-21							
Matrix: 47mm Filter							
Miscellaneous Parameters							
Total particulate	178		15	ug		01-NOV-21	R5633462
L2649276-28 NORTHWEST-PM2.5-382							
Sampled By: Client on 07-SEP-21							
Matrix: 47mm Filter							
Miscellaneous Parameters							
Total particulate	88		15	ug		01-NOV-21	R5633462
L2649276-29 NORTHWEST-PM2.5-383							
Sampled By: Client on 13-SEP-21							
Matrix: 47mm Filter							
Miscellaneous Parameters							
Total particulate	63		15	ug		01-NOV-21	R5633462
L2649276-30 NORTHWEST-PM2.5-384							
Sampled By: Client on 19-SEP-21							
Matrix: 47mm Filter							
Miscellaneous Parameters							
Total particulate	178		15	ug		01-NOV-21	R5633462
L2649276-31 PM2.5-TRAVEL BLANK							
Sampled By: Client on 05-OCT-21							
Matrix: 47mm Filter							
Miscellaneous Parameters							
Total particulate	16		15	ug		01-NOV-21	R5633462
L2649276-32 NOP1-DUSTFALL-9							
Sampled By: Client on 01-OCT-21							
Matrix: Dustfall							
Dustfalls-Total, Soluble, Insoluble +FV							
Total Dustfall	0.88		0.10	mg/dm2.day		26-OCT-21	R5632814
Total Insoluble Dustfall	0.63		0.10	mg/dm2.day		26-OCT-21	R5632814

* Refer to Referenced Information for Qualifiers (if any) and Methodology.

ALS ENVIRONMENTAL ANALYTICAL REPORT

Sample Details/Parameters	Result	Qualifier*	D.L.	Units	Extracted	Analyzed	Batch
L2649276-32 NOP1-DUSTFALL-9							
Sampled By: Client on 01-OCT-21							
Matrix: Dustfall							
Dustfalls-Total, Soluble, Insoluble +FV							
Total Soluble Dustfall	0.25		0.10	mg/dm2.day		26-OCT-21	R5632814
Fixed Dustfall	0.65		0.10	mg/dm2.day		26-OCT-21	R5632814
Fixed Insoluble Dustfall	0.51		0.10	mg/dm2.day		26-OCT-21	R5632814
Fixed Soluble Dustfall	0.14		0.10	mg/dm2.day		26-OCT-21	R5632814
Volatile Dustfall	0.23		0.10	mg/dm2.day		26-OCT-21	R5632814
Volatile Insoluble Dustfall	0.12		0.10	mg/dm2.day		26-OCT-21	R5632814
Volatile Soluble Dustfall	0.11		0.10	mg/dm2.day		26-OCT-21	R5632814
Interval			1	days		26-OCT-21	R5628468
Mercury (Hg)-Total	<0.00000087		0.00000087	mg/dm2.day	26-OCT-21	26-OCT-21	R5628983
Total Metals in Dustfalls by ICPMS							
Aluminum (Al)-Total	0.00642		0.000052	mg/dm2.day	26-OCT-21	27-OCT-21	R5629542
Interval			1	days		26-OCT-21	R5629116
Interval			1	days		27-OCT-21	R5629984
Antimony (Sb)-Total	<0.0000017		0.0000017	mg/dm2.day	26-OCT-21	27-OCT-21	R5629542
Arsenic (As)-Total	0.0000066		0.0000017	mg/dm2.day	26-OCT-21	27-OCT-21	R5629542
Barium (Ba)-Total	0.0000417		0.00000087	mg/dm2.day	26-OCT-21	27-OCT-21	R5629542
Beryllium (Be)-Total	<0.0000087		0.0000087	mg/dm2.day	26-OCT-21	27-OCT-21	R5629542
Bismuth (Bi)-Total	<0.0000087		0.0000087	mg/dm2.day	26-OCT-21	27-OCT-21	R5629542
Boron (B)-Total	<0.00017		0.00017	mg/dm2.day	26-OCT-21	27-OCT-21	R5629542
Cadmium (Cd)-Total	0.00000315		0.00000087	mg/dm2.day	26-OCT-21	27-OCT-21	R5629542
Calcium (Ca)-Total	0.0125		0.00035	mg/dm2.day	26-OCT-21	27-OCT-21	R5629542
Chromium (Cr)-Total	0.0000107		0.0000087	mg/dm2.day	26-OCT-21	27-OCT-21	R5629542
Cobalt (Co)-Total	0.0000022		0.0000017	mg/dm2.day	26-OCT-21	27-OCT-21	R5629542
Copper (Cu)-Total	0.0000631		0.0000087	mg/dm2.day	26-OCT-21	27-OCT-21	R5629542
Lead (Pb)-Total	0.0000312		0.00000087	mg/dm2.day	27-OCT-21	29-OCT-21	R5632883
Iron (Fe)-Total	0.00450		0.00052	mg/dm2.day	26-OCT-21	27-OCT-21	R5629542
Lithium (Li)-Total	<0.000087		0.000087	mg/dm2.day	26-OCT-21	27-OCT-21	R5629542
Magnesium (Mg)-Total	0.00467		0.000087	mg/dm2.day	26-OCT-21	27-OCT-21	R5629542
Manganese (Mn)-Total	0.000237		0.0000017	mg/dm2.day	26-OCT-21	27-OCT-21	R5629542
Molybdenum (Mo)-Total	0.00000223		0.00000087	mg/dm2.day	26-OCT-21	27-OCT-21	R5629542
Nickel (Ni)-Total	0.0000088		0.0000087	mg/dm2.day	26-OCT-21	27-OCT-21	R5629542
Phosphorus (P)-Total	0.0126		0.00087	mg/dm2.day	26-OCT-21	27-OCT-21	R5629542
Potassium (K)-Total	0.0213		0.00087	mg/dm2.day	26-OCT-21	27-OCT-21	R5629542
Selenium (Se)-Total	<0.000017		0.000017	mg/dm2.day	26-OCT-21	27-OCT-21	R5629542
Silicon (Si)-Total	0.0108		0.00087	mg/dm2.day	26-OCT-21	27-OCT-21	R5629542
Silver (Ag)-Total	0.00000086		0.00000017	mg/dm2.day	26-OCT-21	27-OCT-21	R5629542
Sodium (Na)-Total	0.00667		0.00087	mg/dm2.day	26-OCT-21	27-OCT-21	R5629542
Strontium (Sr)-Total	0.0000419		0.0000017	mg/dm2.day	26-OCT-21	27-OCT-21	R5629542
Thallium (Tl)-Total	<0.0000017		0.0000017	mg/dm2.day	26-OCT-21	27-OCT-21	R5629542
Tin (Sn)-Total	<0.0000017		0.0000017	mg/dm2.day	26-OCT-21	27-OCT-21	R5629542
Titanium (Ti)-Total	<0.00017		0.00017	mg/dm2.day	26-OCT-21	27-OCT-21	R5629542
Uranium (U)-Total	0.00000017		0.00000017	mg/dm2.day	26-OCT-21	27-OCT-21	R5629542
Vanadium (V)-Total	<0.000017		0.000017	mg/dm2.day	26-OCT-21	27-OCT-21	R5629542
Zinc (Zn)-Total	0.000324		0.000052	mg/dm2.day	26-OCT-21	27-OCT-21	R5629542

* Refer to Referenced Information for Qualifiers (if any) and Methodology.

ALS ENVIRONMENTAL ANALYTICAL REPORT

Sample Details/Parameters	Result	Qualifier*	D.L.	Units	Extracted	Analyzed	Batch
L2649276-33 CP1-DUSTFALL-9							
Sampled By: Client on 01-OCT-21							
Matrix: Dustfall							
Dustfalls-Total, Soluble, Insoluble +FV							
Total Dustfall	0.61		0.10	mg/dm2.day		26-OCT-21	R5632814
Total Insoluble Dustfall	0.26		0.10	mg/dm2.day		26-OCT-21	R5632814
Total Soluble Dustfall	0.35		0.10	mg/dm2.day		26-OCT-21	R5632814
Fixed Dustfall	0.30		0.10	mg/dm2.day		26-OCT-21	R5632814
Fixed Insoluble Dustfall	0.13		0.10	mg/dm2.day		26-OCT-21	R5632814
Fixed Soluble Dustfall	0.17		0.10	mg/dm2.day		26-OCT-21	R5632814
Volatile Dustfall	0.31		0.10	mg/dm2.day		26-OCT-21	R5632814
Volatile Insoluble Dustfall	0.13		0.10	mg/dm2.day		26-OCT-21	R5632814
Volatile Soluble Dustfall	0.18		0.10	mg/dm2.day		26-OCT-21	R5632814
Interval			1	days		26-OCT-21	R5628468
Mercury (Hg)-Total	<0.0000016		0.0000016	mg/dm2.day	26-OCT-21	26-OCT-21	R5628983
Total Metals in Dustfalls by ICPMS							
Aluminum (Al)-Total	0.00263		0.000096	mg/dm2.day	26-OCT-21	27-OCT-21	R5629542
Interval			1	days		26-OCT-21	R5629116
Antimony (Sb)-Total	<0.0000032		0.0000032	mg/dm2.day	26-OCT-21	27-OCT-21	R5629542
Arsenic (As)-Total	0.0000041		0.0000032	mg/dm2.day	26-OCT-21	27-OCT-21	R5629542
Barium (Ba)-Total	0.0000788		0.0000016	mg/dm2.day	26-OCT-21	27-OCT-21	R5629542
Beryllium (Be)-Total	<0.000016		0.000016	mg/dm2.day	26-OCT-21	27-OCT-21	R5629542
Bismuth (Bi)-Total	<0.000016		0.000016	mg/dm2.day	26-OCT-21	27-OCT-21	R5629542
Boron (B)-Total	<0.00032		0.00032	mg/dm2.day	26-OCT-21	27-OCT-21	R5629542
Cadmium (Cd)-Total	<0.0000016		0.0000016	mg/dm2.day	26-OCT-21	27-OCT-21	R5629542
Calcium (Ca)-Total	0.0241		0.00064	mg/dm2.day	26-OCT-21	27-OCT-21	R5629542
Chromium (Cr)-Total	<0.000016		0.000016	mg/dm2.day	26-OCT-21	27-OCT-21	R5629542
Cobalt (Co)-Total	<0.0000032		0.0000032	mg/dm2.day	26-OCT-21	27-OCT-21	R5629542
Copper (Cu)-Total	0.000030		0.000016	mg/dm2.day	26-OCT-21	27-OCT-21	R5629542
Lead (Pb)-Total	0.0000080		0.0000016	mg/dm2.day	26-OCT-21	27-OCT-21	R5629542
Iron (Fe)-Total	0.00258		0.00096	mg/dm2.day	26-OCT-21	27-OCT-21	R5629542
Lithium (Li)-Total	<0.00016		0.00016	mg/dm2.day	26-OCT-21	27-OCT-21	R5629542
Magnesium (Mg)-Total	0.00551		0.00016	mg/dm2.day	26-OCT-21	27-OCT-21	R5629542
Manganese (Mn)-Total	0.000340		0.0000032	mg/dm2.day	26-OCT-21	27-OCT-21	R5629542
Molybdenum (Mo)-Total	<0.0000016		0.0000016	mg/dm2.day	26-OCT-21	27-OCT-21	R5629542
Nickel (Ni)-Total	<0.000016		0.000016	mg/dm2.day	26-OCT-21	27-OCT-21	R5629542
Phosphorus (P)-Total	0.0052		0.0016	mg/dm2.day	26-OCT-21	27-OCT-21	R5629542
Potassium (K)-Total	0.0083		0.0016	mg/dm2.day	26-OCT-21	27-OCT-21	R5629542
Selenium (Se)-Total	<0.000032		0.000032	mg/dm2.day	26-OCT-21	27-OCT-21	R5629542
Silicon (Si)-Total	0.0043		0.0016	mg/dm2.day	26-OCT-21	27-OCT-21	R5629542
Silver (Ag)-Total	<0.00000032		0.00000032	mg/dm2.day	26-OCT-21	27-OCT-21	R5629542
Sodium (Na)-Total	0.0035		0.0016	mg/dm2.day	26-OCT-21	27-OCT-21	R5629542
Strontium (Sr)-Total	0.0000571		0.0000032	mg/dm2.day	26-OCT-21	27-OCT-21	R5629542
Thallium (Tl)-Total	<0.0000032		0.0000032	mg/dm2.day	26-OCT-21	27-OCT-21	R5629542
Tin (Sn)-Total	<0.0000032		0.0000032	mg/dm2.day	26-OCT-21	27-OCT-21	R5629542
Titanium (Ti)-Total	<0.00032		0.00032	mg/dm2.day	26-OCT-21	27-OCT-21	R5629542
Uranium (U)-Total	<0.00000032		0.00000032	mg/dm2.day	26-OCT-21	27-OCT-21	R5629542
Vanadium (V)-Total	<0.000032		0.000032	mg/dm2.day	26-OCT-21	27-OCT-21	R5629542
Zinc (Zn)-Total	0.000158		0.000096	mg/dm2.day	26-OCT-21	27-OCT-21	R5629542
L2649276-34 WCP1-DUSTFALL-9							
Sampled By: Client on 01-OCT-21							
Matrix: Dustfall							

* Refer to Referenced Information for Qualifiers (if any) and Methodology.

ALS ENVIRONMENTAL ANALYTICAL REPORT

Sample Details/Parameters	Result	Qualifier*	D.L.	Units	Extracted	Analyzed	Batch
L2649276-34 WCP1-DUSTFALL-9							
Sampled By: Client on 01-OCT-21							
Matrix: Dustfall							
Dustfalls-Total, Soluble, Insoluble +FV							
Total Dustfall	75.2		0.10	mg/dm2.day		26-OCT-21	R5632814
Total Insoluble Dustfall	44.8		0.10	mg/dm2.day		26-OCT-21	R5632814
Total Soluble Dustfall	30.4		0.10	mg/dm2.day		26-OCT-21	R5632814
Fixed Dustfall	22.8		0.10	mg/dm2.day		26-OCT-21	R5632814
Fixed Insoluble Dustfall	6.92		0.10	mg/dm2.day		26-OCT-21	R5632814
Fixed Soluble Dustfall	15.9		0.10	mg/dm2.day		26-OCT-21	R5632814
Volatile Dustfall	52.4		0.10	mg/dm2.day		26-OCT-21	R5632814
Volatile Insoluble Dustfall	37.8		0.10	mg/dm2.day		26-OCT-21	R5632814
Volatile Soluble Dustfall	14.5		0.10	mg/dm2.day		26-OCT-21	R5632814
Interval			1	days		26-OCT-21	R5628468
Mercury (Hg)-Total	0.00000108		0.00000093	mg/dm2.day	26-OCT-21	26-OCT-21	R5628983
Total Metals in Dustfalls by ICPMS							
Aluminum (Al)-Total	0.0760		0.00011	mg/dm2.day	26-OCT-21	27-OCT-21	R5629542
Interval			1	days		26-OCT-21	R5629116
Antimony (Sb)-Total	0.0000064		0.0000037	mg/dm2.day	26-OCT-21	27-OCT-21	R5629542
Arsenic (As)-Total	0.0000648		0.0000037	mg/dm2.day	26-OCT-21	27-OCT-21	R5629542
Barium (Ba)-Total	0.00107		0.0000019	mg/dm2.day	26-OCT-21	27-OCT-21	R5629542
Beryllium (Be)-Total	<0.000019	DLA	0.000019	mg/dm2.day	26-OCT-21	27-OCT-21	R5629542
Bismuth (Bi)-Total	<0.000019	DLA	0.000019	mg/dm2.day	26-OCT-21	27-OCT-21	R5629542
Boron (B)-Total	0.00136		0.00037	mg/dm2.day	26-OCT-21	27-OCT-21	R5629542
Cadmium (Cd)-Total	0.0000539		0.0000019	mg/dm2.day	26-OCT-21	27-OCT-21	R5629542
Calcium (Ca)-Total	0.887		0.00075	mg/dm2.day	26-OCT-21	27-OCT-21	R5629542
Chromium (Cr)-Total	0.000174		0.000019	mg/dm2.day	26-OCT-21	27-OCT-21	R5629542
Cobalt (Co)-Total	0.0000955		0.0000037	mg/dm2.day	26-OCT-21	27-OCT-21	R5629542
Copper (Cu)-Total	0.0151		0.000019	mg/dm2.day	26-OCT-21	27-OCT-21	R5629542
Lead (Pb)-Total	0.000204		0.0000019	mg/dm2.day	26-OCT-21	27-OCT-21	R5629542
Iron (Fe)-Total	0.103		0.0011	mg/dm2.day	26-OCT-21	27-OCT-21	R5629542
Lithium (Li)-Total	<0.00019	DLA	0.00019	mg/dm2.day	26-OCT-21	27-OCT-21	R5629542
Magnesium (Mg)-Total	0.412		0.00019	mg/dm2.day	26-OCT-21	27-OCT-21	R5629542
Manganese (Mn)-Total	0.00967		0.0000037	mg/dm2.day	26-OCT-21	27-OCT-21	R5629542
Molybdenum (Mo)-Total	0.000322		0.0000019	mg/dm2.day	26-OCT-21	27-OCT-21	R5629542
Nickel (Ni)-Total	0.000759		0.000019	mg/dm2.day	26-OCT-21	27-OCT-21	R5629542
Phosphorus (P)-Total	3.56		0.0019	mg/dm2.day	26-OCT-21	27-OCT-21	R5629542
Potassium (K)-Total	5.33		0.0019	mg/dm2.day	26-OCT-21	27-OCT-21	R5629542
Selenium (Se)-Total	0.000232		0.000037	mg/dm2.day	26-OCT-21	27-OCT-21	R5629542
Silicon (Si)-Total	0.193		0.0019	mg/dm2.day	26-OCT-21	27-OCT-21	R5629542
Silver (Ag)-Total	0.0000105		0.00000037	mg/dm2.day	26-OCT-21	27-OCT-21	R5629542
Sodium (Na)-Total	0.786		0.0019	mg/dm2.day	26-OCT-21	27-OCT-21	R5629542
Strontium (Sr)-Total	0.00161		0.0000037	mg/dm2.day	26-OCT-21	27-OCT-21	R5629542
Thallium (Tl)-Total	<0.0000037	DLA	0.0000037	mg/dm2.day	26-OCT-21	27-OCT-21	R5629542
Tin (Sn)-Total	<0.0000037	DLA	0.0000037	mg/dm2.day	26-OCT-21	27-OCT-21	R5629542
Titanium (Ti)-Total	0.00099		0.00037	mg/dm2.day	26-OCT-21	27-OCT-21	R5629542
Uranium (U)-Total	0.00000875		0.00000037	mg/dm2.day	26-OCT-21	27-OCT-21	R5629542
Vanadium (V)-Total	0.000229		0.000037	mg/dm2.day	26-OCT-21	27-OCT-21	R5629542
Zinc (Zn)-Total	0.0419		0.00011	mg/dm2.day	26-OCT-21	27-OCT-21	R5629542
L2649276-35 GH1-DUSTFALL-9							
Sampled By: Client on 01-OCT-21							
Matrix: Dustfall							

* Refer to Referenced Information for Qualifiers (if any) and Methodology.

ALS ENVIRONMENTAL ANALYTICAL REPORT

Sample Details/Parameters	Result	Qualifier*	D.L.	Units	Extracted	Analyzed	Batch
L2649276-35 GH1-DUSTFALL-9							
Sampled By: Client on 01-OCT-21							
Matrix: Dustfall							
Dustfalls-Total, Soluble, Insoluble +FV							
Total Dustfall	10.2		0.10	mg/dm2.day		26-OCT-21	R5632814
Total Insoluble Dustfall	4.91		0.10	mg/dm2.day		26-OCT-21	R5632814
Total Soluble Dustfall	5.21		0.10	mg/dm2.day		26-OCT-21	R5632814
Fixed Dustfall	4.14		0.10	mg/dm2.day		26-OCT-21	R5632814
Fixed Insoluble Dustfall	2.50		0.10	mg/dm2.day		26-OCT-21	R5632814
Fixed Soluble Dustfall	1.63		0.10	mg/dm2.day		26-OCT-21	R5632814
Volatile Dustfall	6.01		0.10	mg/dm2.day		26-OCT-21	R5632814
Volatile Insoluble Dustfall	2.44		0.10	mg/dm2.day		26-OCT-21	R5632814
Volatile Soluble Dustfall	3.57		0.10	mg/dm2.day		26-OCT-21	R5632814
Interval			1	days		26-OCT-21	R5628468
Mercury (Hg)-Total	<0.00000093		0.00000093	mg/dm2.day	26-OCT-21	26-OCT-21	R5628983
Total Metals in Dustfalls by ICPMS							
Aluminum (Al)-Total	0.0245		0.000056	mg/dm2.day	26-OCT-21	27-OCT-21	R5629542
Interval			1	days		26-OCT-21	R5629116
Antimony (Sb)-Total	0.0000040		0.0000019	mg/dm2.day	26-OCT-21	27-OCT-21	R5629542
Arsenic (As)-Total	0.0000198		0.0000019	mg/dm2.day	26-OCT-21	27-OCT-21	R5629542
Barium (Ba)-Total	0.000262		0.00000093	mg/dm2.day	26-OCT-21	27-OCT-21	R5629542
Beryllium (Be)-Total	<0.0000093		0.0000093	mg/dm2.day	26-OCT-21	27-OCT-21	R5629542
Bismuth (Bi)-Total	<0.0000093		0.0000093	mg/dm2.day	26-OCT-21	27-OCT-21	R5629542
Boron (B)-Total	0.00020		0.00019	mg/dm2.day	26-OCT-21	27-OCT-21	R5629542
Cadmium (Cd)-Total	0.00000473		0.00000093	mg/dm2.day	26-OCT-21	27-OCT-21	R5629542
Calcium (Ca)-Total	0.158		0.00037	mg/dm2.day	26-OCT-21	27-OCT-21	R5629542
Chromium (Cr)-Total	0.0000765		0.0000093	mg/dm2.day	26-OCT-21	27-OCT-21	R5629542
Cobalt (Co)-Total	0.0000190		0.0000019	mg/dm2.day	26-OCT-21	27-OCT-21	R5629542
Copper (Cu)-Total	0.00116		0.0000093	mg/dm2.day	26-OCT-21	27-OCT-21	R5629542
Lead (Pb)-Total	0.0000289		0.00000093	mg/dm2.day	26-OCT-21	27-OCT-21	R5629542
Iron (Fe)-Total	0.0362		0.00056	mg/dm2.day	26-OCT-21	27-OCT-21	R5629542
Lithium (Li)-Total	<0.000093		0.000093	mg/dm2.day	26-OCT-21	27-OCT-21	R5629542
Magnesium (Mg)-Total	0.0594		0.000093	mg/dm2.day	26-OCT-21	27-OCT-21	R5629542
Manganese (Mn)-Total	0.00258		0.0000019	mg/dm2.day	26-OCT-21	27-OCT-21	R5629542
Molybdenum (Mo)-Total	0.0000266		0.00000093	mg/dm2.day	26-OCT-21	27-OCT-21	R5629542
Nickel (Ni)-Total	0.0000879		0.0000093	mg/dm2.day	26-OCT-21	27-OCT-21	R5629542
Phosphorus (P)-Total	0.336		0.00093	mg/dm2.day	26-OCT-21	27-OCT-21	R5629542
Potassium (K)-Total	0.492		0.00093	mg/dm2.day	26-OCT-21	27-OCT-21	R5629542
Selenium (Se)-Total	0.000044		0.000019	mg/dm2.day	26-OCT-21	27-OCT-21	R5629542
Silicon (Si)-Total	0.0424		0.00093	mg/dm2.day	26-OCT-21	27-OCT-21	R5629542
Silver (Ag)-Total	0.00000121		0.00000019	mg/dm2.day	26-OCT-21	27-OCT-21	R5629542
Sodium (Na)-Total	0.0945		0.00093	mg/dm2.day	26-OCT-21	27-OCT-21	R5629542
Strontium (Sr)-Total	0.000350		0.0000019	mg/dm2.day	26-OCT-21	27-OCT-21	R5629542
Thallium (Tl)-Total	<0.0000019		0.0000019	mg/dm2.day	26-OCT-21	27-OCT-21	R5629542
Tin (Sn)-Total	0.0000020		0.0000019	mg/dm2.day	26-OCT-21	27-OCT-21	R5629542
Titanium (Ti)-Total	0.00051		0.00019	mg/dm2.day	26-OCT-21	27-OCT-21	R5629542
Uranium (U)-Total	0.00000172		0.00000019	mg/dm2.day	26-OCT-21	27-OCT-21	R5629542
Vanadium (V)-Total	0.000083		0.000019	mg/dm2.day	26-OCT-21	27-OCT-21	R5629542
Zinc (Zn)-Total	0.00304		0.000056	mg/dm2.day	26-OCT-21	27-OCT-21	R5629542

* Refer to Referenced Information for Qualifiers (if any) and Methodology.

ALS ENVIRONMENTAL ANALYTICAL REPORT

Sample Details/Parameters	Result	Qualifier*	D.L.	Units	Extracted	Analyzed	Batch
L2649276-36 SPP1-DUSTFALL-38							
Sampled By: Client on 01-SEP-21							
Matrix: Dustfall							
Dustfalls-Total, Soluble, Insoluble +FV							
Total Dustfall	109		0.43	mg/dm2.day		26-OCT-21	R5632814
Total Insoluble Dustfall	60.8		0.43	mg/dm2.day		26-OCT-21	R5632814
Total Soluble Dustfall	47.7		0.43	mg/dm2.day		26-OCT-21	R5632814
Fixed Dustfall	25.6		0.43	mg/dm2.day		26-OCT-21	R5632814
Fixed Insoluble Dustfall	8.35		0.43	mg/dm2.day		26-OCT-21	R5632814
Fixed Soluble Dustfall	17.2		0.43	mg/dm2.day		26-OCT-21	R5632814
Volatile Dustfall	83.0		0.43	mg/dm2.day		26-OCT-21	R5632814
Volatile Insoluble Dustfall	52.5		0.43	mg/dm2.day		26-OCT-21	R5632814
Volatile Soluble Dustfall	30.5		0.43	mg/dm2.day		26-OCT-21	R5632814
Interval			1	days		26-OCT-21	R5628468
Mercury (Hg)-Total	<0.0000055		0.0000055	mg/dm2.day	26-OCT-21	26-OCT-21	R5628983
Total Metals in Dustfalls by ICPMS							
Aluminum (Al)-Total	0.0514		0.00033	mg/dm2.day	26-OCT-21	27-OCT-21	R5629542
Interval			1	days		26-OCT-21	R5629116
Antimony (Sb)-Total	0.000017		0.000011	mg/dm2.day	26-OCT-21	27-OCT-21	R5629542
Arsenic (As)-Total	0.000136		0.000011	mg/dm2.day	26-OCT-21	27-OCT-21	R5629542
Barium (Ba)-Total	0.00103		0.0000055	mg/dm2.day	26-OCT-21	27-OCT-21	R5629542
Beryllium (Be)-Total	<0.000055		0.000055	mg/dm2.day	26-OCT-21	27-OCT-21	R5629542
Bismuth (Bi)-Total	<0.000055		0.000055	mg/dm2.day	26-OCT-21	27-OCT-21	R5629542
Boron (B)-Total	0.0016		0.0011	mg/dm2.day	26-OCT-21	27-OCT-21	R5629542
Cadmium (Cd)-Total	0.0000511		0.0000055	mg/dm2.day	26-OCT-21	27-OCT-21	R5629542
Calcium (Ca)-Total	1.39		0.0022	mg/dm2.day	26-OCT-21	27-OCT-21	R5629542
Chromium (Cr)-Total	0.000262		0.000055	mg/dm2.day	26-OCT-21	27-OCT-21	R5629542
Cobalt (Co)-Total	0.000044		0.000011	mg/dm2.day	26-OCT-21	27-OCT-21	R5629542
Copper (Cu)-Total	0.0154		0.000055	mg/dm2.day	26-OCT-21	27-OCT-21	R5629542
Lead (Pb)-Total	0.000603		0.0000055	mg/dm2.day	26-OCT-21	27-OCT-21	R5629542
Iron (Fe)-Total	0.0627		0.0033	mg/dm2.day	26-OCT-21	27-OCT-21	R5629542
Lithium (Li)-Total	<0.00055		0.00055	mg/dm2.day	26-OCT-21	27-OCT-21	R5629542
Magnesium (Mg)-Total	0.344		0.00055	mg/dm2.day	26-OCT-21	27-OCT-21	R5629542
Manganese (Mn)-Total	0.0106		0.000011	mg/dm2.day	26-OCT-21	27-OCT-21	R5629542
Molybdenum (Mo)-Total	0.000286		0.0000055	mg/dm2.day	26-OCT-21	27-OCT-21	R5629542
Nickel (Ni)-Total	0.000735		0.000055	mg/dm2.day	26-OCT-21	27-OCT-21	R5629542
Phosphorus (P)-Total	4.32		0.0055	mg/dm2.day	26-OCT-21	27-OCT-21	R5629542
Potassium (K)-Total	4.57		0.0055	mg/dm2.day	26-OCT-21	27-OCT-21	R5629542
Selenium (Se)-Total	0.00023		0.00011	mg/dm2.day	26-OCT-21	27-OCT-21	R5629542
Silicon (Si)-Total	0.128		0.0055	mg/dm2.day	26-OCT-21	27-OCT-21	R5629542
Silver (Ag)-Total	0.0000204		0.0000011	mg/dm2.day	26-OCT-21	27-OCT-21	R5629542
Sodium (Na)-Total	0.949		0.0055	mg/dm2.day	26-OCT-21	27-OCT-21	R5629542
Strontium (Sr)-Total	0.00207		0.000011	mg/dm2.day	26-OCT-21	27-OCT-21	R5629542
Thallium (Tl)-Total	<0.000011		0.000011	mg/dm2.day	26-OCT-21	27-OCT-21	R5629542
Tin (Sn)-Total	<0.000011		0.000011	mg/dm2.day	26-OCT-21	27-OCT-21	R5629542
Titanium (Ti)-Total	<0.0011		0.0011	mg/dm2.day	26-OCT-21	27-OCT-21	R5629542
Uranium (U)-Total	0.0000044		0.0000011	mg/dm2.day	26-OCT-21	27-OCT-21	R5629542
Vanadium (V)-Total	0.00011		0.00011	mg/dm2.day	26-OCT-21	27-OCT-21	R5629542
Zinc (Zn)-Total	0.0271		0.00033	mg/dm2.day	26-OCT-21	27-OCT-21	R5629542
L2649276-37 SPP1-DUSTFALL-39							
Sampled By: Client on 08-SEP-21							
Matrix: Dustfall							
Dustfalls-Total, Soluble, Insoluble +FV							

* Refer to Referenced Information for Qualifiers (if any) and Methodology.

ALS ENVIRONMENTAL ANALYTICAL REPORT

Sample Details/Parameters	Result	Qualifier*	D.L.	Units	Extracted	Analyzed	Batch
L2649276-37 SPP1-DUSTFALL-39							
Sampled By: Client on 08-SEP-21							
Matrix: Dustfall							
Dustfalls-Total, Soluble, Insoluble +FV							
Total Dustfall	129		0.43	mg/dm2.day		26-OCT-21	R5632814
Total Insoluble Dustfall	74.6		0.43	mg/dm2.day		26-OCT-21	R5632814
Total Soluble Dustfall	54.0		0.43	mg/dm2.day		26-OCT-21	R5632814
Fixed Dustfall	29.1		0.43	mg/dm2.day		26-OCT-21	R5632814
Fixed Insoluble Dustfall	11.6		0.43	mg/dm2.day		26-OCT-21	R5632814
Fixed Soluble Dustfall	17.5		0.43	mg/dm2.day		26-OCT-21	R5632814
Volatile Dustfall	99.5		0.43	mg/dm2.day		26-OCT-21	R5632814
Volatile Insoluble Dustfall	63.0		0.43	mg/dm2.day		26-OCT-21	R5632814
Volatile Soluble Dustfall	36.5		0.43	mg/dm2.day		26-OCT-21	R5632814
Interval			1	days		26-OCT-21	R5628468
Mercury (Hg)-Total	<0.0000043		0.0000043	mg/dm2.day	26-OCT-21	26-OCT-21	R5628983
Total Metals in Dustfalls by ICPMS							
Aluminum (Al)-Total	0.110		0.00026	mg/dm2.day	26-OCT-21	27-OCT-21	R5629542
Interval			1	days		26-OCT-21	R5629116
Antimony (Sb)-Total	0.0000300		0.0000085	mg/dm2.day	26-OCT-21	27-OCT-21	R5629542
Arsenic (As)-Total	0.000226		0.0000085	mg/dm2.day	26-OCT-21	27-OCT-21	R5629542
Barium (Ba)-Total	0.00203		0.0000043	mg/dm2.day	26-OCT-21	27-OCT-21	R5629542
Beryllium (Be)-Total	<0.000043		0.000043	mg/dm2.day	26-OCT-21	27-OCT-21	R5629542
Bismuth (Bi)-Total	<0.000043		0.000043	mg/dm2.day	26-OCT-21	27-OCT-21	R5629542
Boron (B)-Total	0.00488		0.00085	mg/dm2.day	26-OCT-21	27-OCT-21	R5629542
Cadmium (Cd)-Total	0.000161		0.0000043	mg/dm2.day	26-OCT-21	27-OCT-21	R5629542
Calcium (Ca)-Total	1.58		0.0017	mg/dm2.day	26-OCT-21	27-OCT-21	R5629542
Chromium (Cr)-Total	0.000364		0.000043	mg/dm2.day	26-OCT-21	27-OCT-21	R5629542
Cobalt (Co)-Total	0.000140		0.0000085	mg/dm2.day	26-OCT-21	27-OCT-21	R5629542
Copper (Cu)-Total	0.0263		0.000043	mg/dm2.day	26-OCT-21	27-OCT-21	R5629542
Lead (Pb)-Total	0.00173		0.0000043	mg/dm2.day	26-OCT-21	27-OCT-21	R5629542
Iron (Fe)-Total	0.142		0.0026	mg/dm2.day	26-OCT-21	27-OCT-21	R5629542
Lithium (Li)-Total	<0.00043		0.00043	mg/dm2.day	26-OCT-21	27-OCT-21	R5629542
Magnesium (Mg)-Total	0.711		0.00043	mg/dm2.day	26-OCT-21	27-OCT-21	R5629542
Manganese (Mn)-Total	0.0192		0.0000085	mg/dm2.day	26-OCT-21	27-OCT-21	R5629542
Molybdenum (Mo)-Total	0.000672		0.0000043	mg/dm2.day	26-OCT-21	27-OCT-21	R5629542
Nickel (Ni)-Total	0.00334		0.000043	mg/dm2.day	26-OCT-21	27-OCT-21	R5629542
Phosphorus (P)-Total	5.39		0.0043	mg/dm2.day	26-OCT-21	27-OCT-21	R5629542
Potassium (K)-Total	7.47		0.0043	mg/dm2.day	26-OCT-21	27-OCT-21	R5629542
Selenium (Se)-Total	0.000256		0.000085	mg/dm2.day	26-OCT-21	27-OCT-21	R5629542
Silicon (Si)-Total	0.282		0.0043	mg/dm2.day	26-OCT-21	27-OCT-21	R5629542
Silver (Ag)-Total	0.0000370		0.00000085	mg/dm2.day	26-OCT-21	27-OCT-21	R5629542
Sodium (Na)-Total	0.553		0.0043	mg/dm2.day	26-OCT-21	27-OCT-21	R5629542
Strontium (Sr)-Total	0.00448		0.0000085	mg/dm2.day	26-OCT-21	27-OCT-21	R5629542
Thallium (Tl)-Total	<0.0000085		0.0000085	mg/dm2.day	26-OCT-21	27-OCT-21	R5629542
Tin (Sn)-Total	<0.0000085		0.0000085	mg/dm2.day	26-OCT-21	27-OCT-21	R5629542
Titanium (Ti)-Total	0.00213		0.00085	mg/dm2.day	26-OCT-21	27-OCT-21	R5629542
Uranium (U)-Total	0.0000149		0.00000085	mg/dm2.day	26-OCT-21	27-OCT-21	R5629542
Vanadium (V)-Total	0.000238		0.000085	mg/dm2.day	26-OCT-21	27-OCT-21	R5629542
Zinc (Zn)-Total	0.0907		0.00026	mg/dm2.day	26-OCT-21	27-OCT-21	R5629542
L2649276-38 SPP1-DUSTFALL-40							
Sampled By: Client on 15-SEP-21							
Matrix: Dustfall							
Dustfalls-Total, Soluble, Insoluble +FV							

* Refer to Referenced Information for Qualifiers (if any) and Methodology.

ALS ENVIRONMENTAL ANALYTICAL REPORT

Sample Details/Parameters	Result	Qualifier*	D.L.	Units	Extracted	Analyzed	Batch
L2649276-38 SPP1-DUSTFALL-40							
Sampled By: Client on 15-SEP-21							
Matrix: Dustfall							
Dustfalls-Total, Soluble, Insoluble +FV							
Total Dustfall	133		0.43	mg/dm2.day		26-OCT-21	R5632814
Total Insoluble Dustfall	59.7		0.43	mg/dm2.day		26-OCT-21	R5632814
Total Soluble Dustfall	73.3		0.43	mg/dm2.day		26-OCT-21	R5632814
Fixed Dustfall	28.6		0.43	mg/dm2.day		26-OCT-21	R5632814
Fixed Insoluble Dustfall	7.50		0.43	mg/dm2.day		26-OCT-21	R5632814
Fixed Soluble Dustfall	21.1		0.43	mg/dm2.day		26-OCT-21	R5632814
Volatile Dustfall	104		0.43	mg/dm2.day		26-OCT-21	R5632814
Volatile Insoluble Dustfall	52.2		0.43	mg/dm2.day		26-OCT-21	R5632814
Volatile Soluble Dustfall	52.2		0.43	mg/dm2.day		26-OCT-21	R5632814
Interval			1	days		26-OCT-21	R5628468
Mercury (Hg)-Total	<0.000011		0.000011	mg/dm2.day	26-OCT-21	26-OCT-21	R5628983
Total Metals in Dustfalls by ICPMS							
Aluminum (Al)-Total	0.0889		0.00067	mg/dm2.day	26-OCT-21	27-OCT-21	R5629542
Interval			1	days		26-OCT-21	R5629116
Antimony (Sb)-Total	0.000034		0.000022	mg/dm2.day	26-OCT-21	27-OCT-21	R5629542
Arsenic (As)-Total	0.000165		0.000022	mg/dm2.day	26-OCT-21	27-OCT-21	R5629542
Barium (Ba)-Total	0.00166		0.000011	mg/dm2.day	26-OCT-21	27-OCT-21	R5629542
Beryllium (Be)-Total	<0.00011		0.00011	mg/dm2.day	26-OCT-21	27-OCT-21	R5629542
Bismuth (Bi)-Total	<0.00011		0.00011	mg/dm2.day	26-OCT-21	27-OCT-21	R5629542
Boron (B)-Total	0.0033		0.0022	mg/dm2.day	26-OCT-21	27-OCT-21	R5629542
Cadmium (Cd)-Total	0.000095		0.000011	mg/dm2.day	26-OCT-21	27-OCT-21	R5629542
Calcium (Ca)-Total	0.970		0.0044	mg/dm2.day	26-OCT-21	27-OCT-21	R5629542
Chromium (Cr)-Total	0.00049		0.00011	mg/dm2.day	26-OCT-21	27-OCT-21	R5629542
Cobalt (Co)-Total	0.000084		0.000022	mg/dm2.day	26-OCT-21	27-OCT-21	R5629542
Copper (Cu)-Total	0.0157		0.00011	mg/dm2.day	26-OCT-21	27-OCT-21	R5629542
Lead (Pb)-Total	0.00132		0.000011	mg/dm2.day	26-OCT-21	27-OCT-21	R5629542
Iron (Fe)-Total	0.106		0.0067	mg/dm2.day	26-OCT-21	27-OCT-21	R5629542
Lithium (Li)-Total	<0.0011		0.0011	mg/dm2.day	26-OCT-21	27-OCT-21	R5629542
Magnesium (Mg)-Total	0.437		0.0011	mg/dm2.day	26-OCT-21	27-OCT-21	R5629542
Manganese (Mn)-Total	0.0147		0.000022	mg/dm2.day	26-OCT-21	27-OCT-21	R5629542
Molybdenum (Mo)-Total	0.000450		0.000011	mg/dm2.day	26-OCT-21	27-OCT-21	R5629542
Nickel (Ni)-Total	0.00134		0.00011	mg/dm2.day	26-OCT-21	27-OCT-21	R5629542
Phosphorus (P)-Total	4.39		0.011	mg/dm2.day	26-OCT-21	27-OCT-21	R5629542
Potassium (K)-Total	6.00		0.011	mg/dm2.day	26-OCT-21	27-OCT-21	R5629542
Selenium (Se)-Total	0.00026		0.00022	mg/dm2.day	26-OCT-21	27-OCT-21	R5629542
Silicon (Si)-Total	0.214		0.011	mg/dm2.day	26-OCT-21	27-OCT-21	R5629542
Silver (Ag)-Total	0.0000863		0.0000022	mg/dm2.day	26-OCT-21	27-OCT-21	R5629542
Sodium (Na)-Total	1.19		0.011	mg/dm2.day	26-OCT-21	27-OCT-21	R5629542
Strontium (Sr)-Total	0.00362		0.000022	mg/dm2.day	26-OCT-21	27-OCT-21	R5629542
Thallium (Tl)-Total	<0.000022		0.000022	mg/dm2.day	26-OCT-21	27-OCT-21	R5629542
Tin (Sn)-Total	<0.000022		0.000022	mg/dm2.day	26-OCT-21	27-OCT-21	R5629542
Titanium (Ti)-Total	<0.0022		0.0022	mg/dm2.day	26-OCT-21	27-OCT-21	R5629542
Uranium (U)-Total	0.0000527		0.0000022	mg/dm2.day	26-OCT-21	27-OCT-21	R5629542
Vanadium (V)-Total	<0.00022		0.00022	mg/dm2.day	26-OCT-21	27-OCT-21	R5629542
Zinc (Zn)-Total	0.0518		0.00067	mg/dm2.day	26-OCT-21	27-OCT-21	R5629542
L2649276-39 SPP1-DUSTFALL-41							
Sampled By: Client on 22-SEP-21							
Matrix: Dustfall							
Dustfalls-Total, Soluble, Insoluble +FV							
Total Dustfall	14.0		0.43	mg/dm2.day		26-OCT-21	R5632814

* Refer to Referenced Information for Qualifiers (if any) and Methodology.

ALS ENVIRONMENTAL ANALYTICAL REPORT

Sample Details/Parameters	Result	Qualifier*	D.L.	Units	Extracted	Analyzed	Batch
L2649276-39 SPP1-DUSTFALL-41							
Sampled By: Client on 22-SEP-21							
Matrix: Dustfall							
Dustfalls-Total, Soluble, Insoluble +FV							
Total Insoluble Dustfall	2.94		0.43	mg/dm2.day		26-OCT-21	R5632814
Total Soluble Dustfall	11.1		0.43	mg/dm2.day		26-OCT-21	R5632814
Fixed Dustfall	4.70		0.43	mg/dm2.day		26-OCT-21	R5632814
Fixed Insoluble Dustfall	1.06		0.43	mg/dm2.day		26-OCT-21	R5632814
Fixed Soluble Dustfall	3.64		0.43	mg/dm2.day		26-OCT-21	R5632814
Volatile Dustfall	9.34		0.43	mg/dm2.day		26-OCT-21	R5632814
Volatile Insoluble Dustfall	1.88		0.43	mg/dm2.day		26-OCT-21	R5632814
Volatile Soluble Dustfall	7.46		0.43	mg/dm2.day		26-OCT-21	R5632814
Interval			1	days		26-OCT-21	R5628468
Mercury (Hg)-Total	<0.0000032		0.0000032	mg/dm2.day	26-OCT-21	26-OCT-21	R5628983
Total Metals in Dustfalls by ICPMS							
Aluminum (Al)-Total	0.0109		0.00019	mg/dm2.day	26-OCT-21	27-OCT-21	R5629542
Interval			1	days		26-OCT-21	R5629116
Antimony (Sb)-Total	0.0000076		0.0000064	mg/dm2.day	26-OCT-21	27-OCT-21	R5629542
Arsenic (As)-Total	0.0000080		0.0000064	mg/dm2.day	26-OCT-21	27-OCT-21	R5629542
Barium (Ba)-Total	0.000202		0.0000032	mg/dm2.day	26-OCT-21	27-OCT-21	R5629542
Beryllium (Be)-Total	<0.000032		0.000032	mg/dm2.day	26-OCT-21	27-OCT-21	R5629542
Bismuth (Bi)-Total	<0.000032		0.000032	mg/dm2.day	26-OCT-21	27-OCT-21	R5629542
Boron (B)-Total	<0.00064		0.00064	mg/dm2.day	26-OCT-21	27-OCT-21	R5629542
Cadmium (Cd)-Total	<0.0000032		0.0000032	mg/dm2.day	26-OCT-21	27-OCT-21	R5629542
Calcium (Ca)-Total	0.837		0.0013	mg/dm2.day	26-OCT-21	27-OCT-21	R5629542
Chromium (Cr)-Total	0.000094		0.000032	mg/dm2.day	26-OCT-21	27-OCT-21	R5629542
Cobalt (Co)-Total	0.0000065		0.0000064	mg/dm2.day	26-OCT-21	27-OCT-21	R5629542
Copper (Cu)-Total	0.000642		0.000032	mg/dm2.day	26-OCT-21	27-OCT-21	R5629542
Lead (Pb)-Total	0.000103		0.0000032	mg/dm2.day	26-OCT-21	27-OCT-21	R5629542
Iron (Fe)-Total	0.0142		0.0019	mg/dm2.day	26-OCT-21	27-OCT-21	R5629542
Lithium (Li)-Total	<0.00032		0.00032	mg/dm2.day	26-OCT-21	27-OCT-21	R5629542
Magnesium (Mg)-Total	0.102		0.00032	mg/dm2.day	26-OCT-21	27-OCT-21	R5629542
Manganese (Mn)-Total	0.000780		0.0000064	mg/dm2.day	26-OCT-21	27-OCT-21	R5629542
Molybdenum (Mo)-Total	0.0000241		0.0000032	mg/dm2.day	26-OCT-21	27-OCT-21	R5629542
Nickel (Ni)-Total	0.000087		0.000032	mg/dm2.day	26-OCT-21	27-OCT-21	R5629542
Phosphorus (P)-Total	0.826		0.0032	mg/dm2.day	26-OCT-21	27-OCT-21	R5629542
Potassium (K)-Total	0.347		0.0032	mg/dm2.day	26-OCT-21	27-OCT-21	R5629542
Selenium (Se)-Total	<0.000064		0.000064	mg/dm2.day	26-OCT-21	27-OCT-21	R5629542
Silicon (Si)-Total	0.0243		0.0032	mg/dm2.day	26-OCT-21	27-OCT-21	R5629542
Silver (Ag)-Total	0.00000294		0.00000064	mg/dm2.day	26-OCT-21	27-OCT-21	R5629542
Sodium (Na)-Total	0.111		0.0032	mg/dm2.day	26-OCT-21	27-OCT-21	R5629542
Strontium (Sr)-Total	0.000383		0.0000064	mg/dm2.day	26-OCT-21	27-OCT-21	R5629542
Thallium (Tl)-Total	<0.0000064		0.0000064	mg/dm2.day	26-OCT-21	27-OCT-21	R5629542
Tin (Sn)-Total	<0.0000064		0.0000064	mg/dm2.day	26-OCT-21	27-OCT-21	R5629542
Titanium (Ti)-Total	<0.00064		0.00064	mg/dm2.day	26-OCT-21	27-OCT-21	R5629542
Uranium (U)-Total	<0.00000064		0.00000064	mg/dm2.day	26-OCT-21	27-OCT-21	R5629542
Vanadium (V)-Total	<0.000064		0.000064	mg/dm2.day	26-OCT-21	27-OCT-21	R5629542
Zinc (Zn)-Total	0.00198		0.00019	mg/dm2.day	26-OCT-21	27-OCT-21	R5629542
L2649276-40 DUSTFALL-GALLINGER ROAD							
Sampled By: Client on 01-OCT-21							
Matrix: Dustfall							
Dustfalls-Total, Soluble, Insoluble +FV							
Total Dustfall	0.50		0.10	mg/dm2.day		26-OCT-21	R5632814

* Refer to Referenced Information for Qualifiers (if any) and Methodology.

ALS ENVIRONMENTAL ANALYTICAL REPORT

Sample Details/Parameters	Result	Qualifier*	D.L.	Units	Extracted	Analyzed	Batch
L2649276-40 DUSTFALL-GALLINGER ROAD							
Sampled By: Client on 01-OCT-21							
Matrix: Dustfall							
Dustfalls-Total, Soluble, Insoluble +FV							
Total Insoluble Dustfall	0.26		0.10	mg/dm2.day		26-OCT-21	R5632814
Total Soluble Dustfall	0.24		0.10	mg/dm2.day		26-OCT-21	R5632814
Fixed Dustfall	0.23		0.10	mg/dm2.day		26-OCT-21	R5632814
Fixed Insoluble Dustfall	<0.10		0.10	mg/dm2.day		26-OCT-21	R5632814
Fixed Soluble Dustfall	0.14		0.10	mg/dm2.day		26-OCT-21	R5632814
Volatile Dustfall	0.27		0.10	mg/dm2.day		26-OCT-21	R5632814
Volatile Insoluble Dustfall	0.18		0.10	mg/dm2.day		26-OCT-21	R5632814
Volatile Soluble Dustfall	<0.10		0.10	mg/dm2.day		26-OCT-21	R5632814
Interval			1	days		26-OCT-21	R5628468
Mercury (Hg)-Total	<0.0000024		0.0000024	mg/dm2.day	26-OCT-21	26-OCT-21	R5628983
Total Metals in Dustfalls by ICPMS							
Aluminum (Al)-Total	0.00218		0.00014	mg/dm2.day	26-OCT-21	27-OCT-21	R5629542
Interval			1	days		26-OCT-21	R5629116
Antimony (Sb)-Total	<0.0000047		0.0000047	mg/dm2.day	26-OCT-21	27-OCT-21	R5629542
Arsenic (As)-Total	<0.0000047		0.0000047	mg/dm2.day	26-OCT-21	27-OCT-21	R5629542
Barium (Ba)-Total	0.0000731		0.0000024	mg/dm2.day	26-OCT-21	27-OCT-21	R5629542
Beryllium (Be)-Total	<0.000024		0.000024	mg/dm2.day	26-OCT-21	27-OCT-21	R5629542
Bismuth (Bi)-Total	<0.000024		0.000024	mg/dm2.day	26-OCT-21	27-OCT-21	R5629542
Boron (B)-Total	<0.00047		0.00047	mg/dm2.day	26-OCT-21	27-OCT-21	R5629542
Cadmium (Cd)-Total	<0.0000024		0.0000024	mg/dm2.day	26-OCT-21	27-OCT-21	R5629542
Calcium (Ca)-Total	0.0233		0.00094	mg/dm2.day	26-OCT-21	27-OCT-21	R5629542
Chromium (Cr)-Total	0.000058		0.000024	mg/dm2.day	26-OCT-21	27-OCT-21	R5629542
Cobalt (Co)-Total	<0.0000047		0.0000047	mg/dm2.day	26-OCT-21	27-OCT-21	R5629542
Copper (Cu)-Total	0.000073		0.000024	mg/dm2.day	26-OCT-21	27-OCT-21	R5629542
Lead (Pb)-Total	0.0000071		0.0000024	mg/dm2.day	26-OCT-21	27-OCT-21	R5629542
Iron (Fe)-Total	0.0031		0.0014	mg/dm2.day	26-OCT-21	27-OCT-21	R5629542
Lithium (Li)-Total	<0.00024		0.00024	mg/dm2.day	26-OCT-21	27-OCT-21	R5629542
Magnesium (Mg)-Total	0.00687		0.00024	mg/dm2.day	26-OCT-21	27-OCT-21	R5629542
Manganese (Mn)-Total	0.000329		0.0000047	mg/dm2.day	26-OCT-21	27-OCT-21	R5629542
Molybdenum (Mo)-Total	0.0000030		0.0000024	mg/dm2.day	26-OCT-21	27-OCT-21	R5629542
Nickel (Ni)-Total	0.000045		0.000024	mg/dm2.day	26-OCT-21	27-OCT-21	R5629542
Phosphorus (P)-Total	0.0051		0.0024	mg/dm2.day	26-OCT-21	27-OCT-21	R5629542
Potassium (K)-Total	0.0084		0.0024	mg/dm2.day	26-OCT-21	27-OCT-21	R5629542
Selenium (Se)-Total	<0.000047		0.000047	mg/dm2.day	26-OCT-21	27-OCT-21	R5629542
Silicon (Si)-Total	0.0040		0.0024	mg/dm2.day	26-OCT-21	27-OCT-21	R5629542
Silver (Ag)-Total	<0.00000047		0.00000047	mg/dm2.day	26-OCT-21	27-OCT-21	R5629542
Sodium (Na)-Total	0.0091		0.0024	mg/dm2.day	26-OCT-21	27-OCT-21	R5629542
Strontium (Sr)-Total	0.0000479		0.0000047	mg/dm2.day	26-OCT-21	27-OCT-21	R5629542
Thallium (Tl)-Total	<0.0000047		0.0000047	mg/dm2.day	26-OCT-21	27-OCT-21	R5629542
Tin (Sn)-Total	<0.0000047		0.0000047	mg/dm2.day	26-OCT-21	27-OCT-21	R5629542
Titanium (Ti)-Total	<0.00047		0.00047	mg/dm2.day	26-OCT-21	27-OCT-21	R5629542
Uranium (U)-Total	<0.00000047		0.00000047	mg/dm2.day	26-OCT-21	27-OCT-21	R5629542
Vanadium (V)-Total	<0.000047		0.000047	mg/dm2.day	26-OCT-21	27-OCT-21	R5629542
Zinc (Zn)-Total	0.00024		0.00014	mg/dm2.day	26-OCT-21	27-OCT-21	R5629542
L2649276-41 DUSTFALL-TAIT ROAD (SOUTH)							
Sampled By: Client on 01-OCT-21							
Matrix: Dustfall							
Dustfalls-Total, Soluble, Insoluble +FV							
Total Dustfall	0.61		0.10	mg/dm2.day		26-OCT-21	R5632814

* Refer to Referenced Information for Qualifiers (if any) and Methodology.

ALS ENVIRONMENTAL ANALYTICAL REPORT

Sample Details/Parameters	Result	Qualifier*	D.L.	Units	Extracted	Analyzed	Batch
L2649276-41 DUSTFALL-TAIT ROAD (SOUTH)							
Sampled By: Client on 01-OCT-21							
Matrix: Dustfall							
Dustfalls-Total, Soluble, Insoluble +FV							
Total Insoluble Dustfall	0.38		0.10	mg/dm2.day		26-OCT-21	R5632814
Total Soluble Dustfall	0.23		0.10	mg/dm2.day		26-OCT-21	R5632814
Fixed Dustfall	0.33		0.10	mg/dm2.day		26-OCT-21	R5632814
Fixed Insoluble Dustfall	0.18		0.10	mg/dm2.day		26-OCT-21	R5632814
Fixed Soluble Dustfall	0.14		0.10	mg/dm2.day		26-OCT-21	R5632814
Volatile Dustfall	0.28		0.10	mg/dm2.day		26-OCT-21	R5632814
Volatile Insoluble Dustfall	0.19		0.10	mg/dm2.day		26-OCT-21	R5632814
Volatile Soluble Dustfall	<0.10		0.10	mg/dm2.day		26-OCT-21	R5632814
Interval			1	days		26-OCT-21	R5628468
Mercury (Hg)-Total	<0.0000022		0.0000022	mg/dm2.day	26-OCT-21	26-OCT-21	R5628983
Total Metals in Dustfalls by ICPMS							
Aluminum (Al)-Total	0.00424		0.00013	mg/dm2.day	26-OCT-21	27-OCT-21	R5629542
Interval			1	days		26-OCT-21	R5629116
Antimony (Sb)-Total	<0.0000044		0.0000044	mg/dm2.day	26-OCT-21	27-OCT-21	R5629542
Arsenic (As)-Total	0.0000052		0.0000044	mg/dm2.day	26-OCT-21	27-OCT-21	R5629542
Barium (Ba)-Total	0.0000936		0.0000022	mg/dm2.day	26-OCT-21	27-OCT-21	R5629542
Beryllium (Be)-Total	<0.000022		0.000022	mg/dm2.day	26-OCT-21	27-OCT-21	R5629542
Bismuth (Bi)-Total	<0.000022		0.000022	mg/dm2.day	26-OCT-21	27-OCT-21	R5629542
Boron (B)-Total	<0.00044		0.00044	mg/dm2.day	26-OCT-21	27-OCT-21	R5629542
Cadmium (Cd)-Total	<0.0000022		0.0000022	mg/dm2.day	26-OCT-21	27-OCT-21	R5629542
Calcium (Ca)-Total	0.0278		0.00087	mg/dm2.day	26-OCT-21	27-OCT-21	R5629542
Chromium (Cr)-Total	<0.000022		0.000022	mg/dm2.day	26-OCT-21	27-OCT-21	R5629542
Cobalt (Co)-Total	<0.0000044		0.0000044	mg/dm2.day	26-OCT-21	27-OCT-21	R5629542
Copper (Cu)-Total	0.000028		0.000022	mg/dm2.day	26-OCT-21	27-OCT-21	R5629542
Lead (Pb)-Total	0.0000092		0.0000022	mg/dm2.day	26-OCT-21	27-OCT-21	R5629542
Iron (Fe)-Total	0.0046		0.0013	mg/dm2.day	26-OCT-21	27-OCT-21	R5629542
Lithium (Li)-Total	<0.00022		0.00022	mg/dm2.day	26-OCT-21	27-OCT-21	R5629542
Magnesium (Mg)-Total	0.00676		0.00022	mg/dm2.day	26-OCT-21	27-OCT-21	R5629542
Manganese (Mn)-Total	0.000389		0.0000044	mg/dm2.day	26-OCT-21	27-OCT-21	R5629542
Molybdenum (Mo)-Total	<0.0000022		0.0000022	mg/dm2.day	26-OCT-21	27-OCT-21	R5629542
Nickel (Ni)-Total	<0.000022		0.000022	mg/dm2.day	26-OCT-21	27-OCT-21	R5629542
Phosphorus (P)-Total	0.0094		0.0022	mg/dm2.day	26-OCT-21	27-OCT-21	R5629542
Potassium (K)-Total	0.0108		0.0022	mg/dm2.day	26-OCT-21	27-OCT-21	R5629542
Selenium (Se)-Total	<0.000044		0.000044	mg/dm2.day	26-OCT-21	27-OCT-21	R5629542
Silicon (Si)-Total	0.0077		0.0022	mg/dm2.day	26-OCT-21	27-OCT-21	R5629542
Silver (Ag)-Total	<0.00000044		0.00000044	mg/dm2.day	26-OCT-21	27-OCT-21	R5629542
Sodium (Na)-Total	0.0025		0.0022	mg/dm2.day	26-OCT-21	27-OCT-21	R5629542
Strontium (Sr)-Total	0.0000713		0.0000044	mg/dm2.day	26-OCT-21	27-OCT-21	R5629542
Thallium (Tl)-Total	<0.0000044		0.0000044	mg/dm2.day	26-OCT-21	27-OCT-21	R5629542
Tin (Sn)-Total	<0.0000044		0.0000044	mg/dm2.day	26-OCT-21	27-OCT-21	R5629542
Titanium (Ti)-Total	<0.00044		0.00044	mg/dm2.day	26-OCT-21	27-OCT-21	R5629542
Uranium (U)-Total	<0.00000044		0.00000044	mg/dm2.day	26-OCT-21	27-OCT-21	R5629542
Vanadium (V)-Total	<0.000044		0.000044	mg/dm2.day	26-OCT-21	27-OCT-21	R5629542
Zinc (Zn)-Total	0.00014		0.00013	mg/dm2.day	26-OCT-21	27-OCT-21	R5629542
L2649276-42 DUSTFALL-NORTHWEST							
Sampled By: Client on 01-OCT-21							
Matrix: Dustfall							
Dustfalls-Total, Soluble, Insoluble +FV							
Total Dustfall	0.56		0.10	mg/dm2.day		26-OCT-21	R5632814

* Refer to Referenced Information for Qualifiers (if any) and Methodology.

ALS ENVIRONMENTAL ANALYTICAL REPORT

Sample Details/Parameters	Result	Qualifier*	D.L.	Units	Extracted	Analyzed	Batch
L2649276-42 DUSTFALL-NORTHWEST							
Sampled By: Client on 01-OCT-21							
Matrix: Dustfall							
Dustfalls-Total, Soluble, Insoluble +FV							
Total Insoluble Dustfall	0.27		0.10	mg/dm2.day		26-OCT-21	R5632814
Total Soluble Dustfall	0.29		0.10	mg/dm2.day		26-OCT-21	R5632814
Fixed Dustfall	0.24		0.10	mg/dm2.day		26-OCT-21	R5632814
Fixed Insoluble Dustfall	0.16		0.10	mg/dm2.day		26-OCT-21	R5632814
Fixed Soluble Dustfall	<0.10		0.10	mg/dm2.day		26-OCT-21	R5632814
Volatile Dustfall	0.32		0.10	mg/dm2.day		26-OCT-21	R5632814
Volatile Insoluble Dustfall	0.10		0.10	mg/dm2.day		26-OCT-21	R5632814
Volatile Soluble Dustfall	0.21		0.10	mg/dm2.day		26-OCT-21	R5632814
Interval			1	days		26-OCT-21	R5628468
Mercury (Hg)-Total	<0.00000054		0.00000054	mg/dm2.day	26-OCT-21	26-OCT-21	R5628983
Total Metals in Dustfalls by ICPMS							
Aluminum (Al)-Total	0.00156		0.000032	mg/dm2.day	26-OCT-21	27-OCT-21	R5629542
Interval			1	days		26-OCT-21	R5629116
Antimony (Sb)-Total	0.0000030		0.0000011	mg/dm2.day	26-OCT-21	27-OCT-21	R5629542
Arsenic (As)-Total	0.0000022		0.0000011	mg/dm2.day	26-OCT-21	27-OCT-21	R5629542
Barium (Ba)-Total	0.0000657		0.0000054	mg/dm2.day	26-OCT-21	27-OCT-21	R5629542
Beryllium (Be)-Total	<0.0000054		0.0000054	mg/dm2.day	26-OCT-21	27-OCT-21	R5629542
Bismuth (Bi)-Total	<0.0000054		0.0000054	mg/dm2.day	26-OCT-21	27-OCT-21	R5629542
Boron (B)-Total	<0.00011		0.00011	mg/dm2.day	26-OCT-21	27-OCT-21	R5629542
Cadmium (Cd)-Total	<0.00000054		0.00000054	mg/dm2.day	26-OCT-21	27-OCT-21	R5629542
Calcium (Ca)-Total	0.0218		0.00021	mg/dm2.day	26-OCT-21	27-OCT-21	R5629542
Chromium (Cr)-Total	0.0000155		0.0000054	mg/dm2.day	26-OCT-21	27-OCT-21	R5629542
Cobalt (Co)-Total	0.0000013		0.0000011	mg/dm2.day	26-OCT-21	27-OCT-21	R5629542
Copper (Cu)-Total	0.0000264		0.0000054	mg/dm2.day	26-OCT-21	27-OCT-21	R5629542
Lead (Pb)-Total	0.00000315		0.00000054	mg/dm2.day	26-OCT-21	27-OCT-21	R5629542
Iron (Fe)-Total	0.00194		0.00032	mg/dm2.day	26-OCT-21	27-OCT-21	R5629542
Lithium (Li)-Total	<0.000054		0.000054	mg/dm2.day	26-OCT-21	27-OCT-21	R5629542
Magnesium (Mg)-Total	0.00694		0.000054	mg/dm2.day	26-OCT-21	27-OCT-21	R5629542
Manganese (Mn)-Total	0.000276		0.0000011	mg/dm2.day	26-OCT-21	27-OCT-21	R5629542
Molybdenum (Mo)-Total	0.00000095		0.00000054	mg/dm2.day	26-OCT-21	27-OCT-21	R5629542
Nickel (Ni)-Total	0.0000087		0.0000054	mg/dm2.day	26-OCT-21	27-OCT-21	R5629542
Phosphorus (P)-Total	0.00260		0.00054	mg/dm2.day	26-OCT-21	27-OCT-21	R5629542
Potassium (K)-Total	0.0176		0.00054	mg/dm2.day	26-OCT-21	27-OCT-21	R5629542
Selenium (Se)-Total	<0.000011		0.000011	mg/dm2.day	26-OCT-21	27-OCT-21	R5629542
Silicon (Si)-Total	0.00316		0.00054	mg/dm2.day	26-OCT-21	27-OCT-21	R5629542
Silver (Ag)-Total	<0.00000011		0.00000011	mg/dm2.day	26-OCT-21	27-OCT-21	R5629542
Sodium (Na)-Total	0.00242		0.00054	mg/dm2.day	26-OCT-21	27-OCT-21	R5629542
Strontium (Sr)-Total	0.0000538		0.0000011	mg/dm2.day	26-OCT-21	27-OCT-21	R5629542
Thallium (Tl)-Total	<0.0000011		0.0000011	mg/dm2.day	26-OCT-21	27-OCT-21	R5629542
Tin (Sn)-Total	<0.0000011		0.0000011	mg/dm2.day	26-OCT-21	27-OCT-21	R5629542
Titanium (Ti)-Total	<0.00011		0.00011	mg/dm2.day	26-OCT-21	27-OCT-21	R5629542
Uranium (U)-Total	0.00000012		0.00000011	mg/dm2.day	26-OCT-21	27-OCT-21	R5629542
Vanadium (V)-Total	<0.000011		0.000011	mg/dm2.day	26-OCT-21	27-OCT-21	R5629542
Zinc (Zn)-Total	0.000083		0.000032	mg/dm2.day	26-OCT-21	27-OCT-21	R5629542

* Refer to Referenced Information for Qualifiers (if any) and Methodology.

Reference Information

Sample Parameter Qualifier Key:

Qualifier	Description
B	Method Blank exceeds ALS DQO. Associated sample results which are < Limit of Reporting or > 5 times blank level are considered reliable.
DLA	Detection Limit adjusted for required dilution
MES	Data Quality Objective was marginally exceeded (by < 10% absolute) for < 10% of analytes in a Multi-Element Scan / Multi-Parameter Scan (considered acceptable as per OMOE & CCME).
MS-B	Matrix Spike recovery could not be accurately calculated due to high analyte background in sample.

Test Method References:

ALS Test Code	Matrix	Test Description	Method Reference**
AIR VOLUME-HIVOL-BU	Filter	Air volume (m3)	USEPA IO3.1
AIR VOLUME-M212 F-BU	Filter	Air volume (m3)	EPA QA Guidance Document 2.12
DUSTFALLS-ALL-DM2-VA	Dustfall	Dustfalls-Total, Soluble, Insoluble +FV	BC LAB MANUAL - PARTICULATE

This analysis is carried out using procedures modified from British Columbia Environmental Manual "Particulate."
Particulates or "Dustfalls" are determined gravimetrically. Total Insoluble and Soluble Dustfalls are determined by filtering a sample through a 0.45 um membrane filter and drying the filter and filtrate at 104 C, followed by ignition at 550 C. The remaining residue after 550 C represents the fixed portion and the weight lost on ignition represents the volatile portion. The sum of all fixed and volatile portions on both Insoluble and Soluble portions represents Total Dustfalls.

HG-DUST(DM2-CVAFS-VA	Dustfall	Total Mercury in Dustfalls by CVAFS	EPA 245.7

This analysis is carried out using procedures adapted from "Standard Methods for the Examination of Water and Wastewater" published by the American Public Health Association, and with procedures adapted from "Test Methods for Evaluating Solid Waste" SW-846 published by the United States Environmental Protection Agency (EPA). Instrumental analysis is by cold vapour atomic fluorescence spectrophotometry or atomic absorption spectrophotometry (EPA Method 245.7).

MET-DUST(DM2)-MS-VA	Dustfall	Total Metals in Dustfalls by ICPMS	EPA 6020A

This analysis is carried out using procedures adapted from "Standard Methods for the Examination of Water and Wastewater" published by the American Public Health Association, and with procedures adapted from "Test Methods for Evaluating Solid Waste" SW-846 published by the United States Environmental Protection Agency (EPA). Instrumental analysis is by inductively coupled plasma - mass spectrometry (EPA Method 6020A).

MET-IO3.5-MS-BU	Filter	Metals on High Volume Filter by ICPMS	IO3.5

After weighing (if required), hivol filters are sub-sampled and leached with nitric acid to extract available metal analytes. After dilution, the extracts are submitted to the ICPMS instrument for analysis.

PART-HIVOL-GRAV-BU	Filter	Particulate on High Volume Filter	USEPA IO3.1
PART-M212 F-GRAV-BU	Filter	PM via Gravimetric Analysis	EPA QA Guidance Document 2.12

The particulate matter collected onto tare-weighed 47mm Teflon Disc filter media is desiccated then brought to a constant weight on an analytical balance. Results are presented in ug (per filter). An air volume can be included to allow for reporting in ug/m3.

** ALS test methods may incorporate modifications from specified reference methods to improve performance.

The last two letters of the above test code(s) indicate the laboratory that performed analytical analysis for that test. Refer to the list below:

Laboratory Definition Code	Laboratory Location
BU	ALS ENVIRONMENTAL - BURLINGTON, ONTARIO, CANADA
VA	ALS ENVIRONMENTAL - VANCOUVER, BRITISH COLUMBIA, CANADA

Chain of Custody Numbers:

Reference Information

Test Method References:

ALS Test Code	Matrix	Test Description	Method Reference**

GLOSSARY OF REPORT TERMS

Surrogates are compounds that are similar in behaviour to target analyte(s), but that do not normally occur in environmental samples. For applicable tests, surrogates are added to samples prior to analysis as a check on recovery. In reports that display the D.L. column, laboratory objectives for surrogates are listed there.
mg/kg - milligrams per kilogram based on dry weight of sample
mg/kg wwt - milligrams per kilogram based on wet weight of sample
mg/kg lwt - milligrams per kilogram based on lipid-adjusted weight
mg/L - unit of concentration based on volume, parts per million.
< - Less than.
D.L. - The reporting limit.
N/A - Result not available. Refer to qualifier code and definition for explanation.

Test results reported relate only to the samples as received by the laboratory.
UNLESS OTHERWISE STATED, ALL SAMPLES WERE RECEIVED IN ACCEPTABLE CONDITION.
Analytical results in unsigned test reports with the DRAFT watermark are subject to change, pending final QC review.

[redacted]

Quality Control Report

Workorder: L2649276 Report Date: 01-NOV-21

Client: New Gold Inc. Rainy River Project
5967 Highway 11/71 P.O. Box 5
Emo ON P0W 1E0

Contact: Sarah Flesher

Test	Matrix	Reference	Result	Qualifier	Units	RPD	Limit	Analyzed
MET-IO3.5-MS-BU	**Filter**							
Batch R5626710								
WG3643407-3 DUP		**L2649276-1**						
Arsenic (As)		<3.0	<3.0	RPD-NA	ug	N/A	20	22-OCT-21
Cadmium (Cd)		<2.0	<2.0	RPD-NA	ug	N/A	20	22-OCT-21
Cobalt (Co)		<2.0	<2.0	RPD-NA	ug	N/A	20	22-OCT-21
Chromium (Cr)		<5.0	<5.0	RPD-NA	ug	N/A	20	22-OCT-21
Copper (Cu)		75.2	72.0		ug	4.3	20	22-OCT-21
Iron (Fe)		738	725		ug	1.8	25	22-OCT-21
Manganese (Mn)		16.8	17.2		ug	2.1	20	22-OCT-21
Nickel (Ni)		<3.0	<3.0	RPD-NA	ug	N/A	20	22-OCT-21
Lead (Pb)		<3.0	<3.0	RPD-NA	ug	N/A	20	22-OCT-21
Selenium (Se)		<10	<10	RPD-NA	ug	N/A	20	22-OCT-21
Vanadium (V)		<5.0	<5.0	RPD-NA	ug	N/A	20	22-OCT-21
Zinc (Zn)		10.3	10.8		ug	4.3	20	22-OCT-21
WG3643407-2 LCS								
Arsenic (As)			99.9		%		80-120	22-OCT-21
Cadmium (Cd)			108.0		%		80-120	22-OCT-21
Cobalt (Co)			104.0		%		80-120	22-OCT-21
Chromium (Cr)			100.0		%		80-120	22-OCT-21
Copper (Cu)			101.0		%		80-120	22-OCT-21
Iron (Fe)			102.8		%		80-120	22-OCT-21
Manganese (Mn)			99.9		%		80-120	22-OCT-21
Nickel (Ni)			102.0		%		80-120	22-OCT-21
Lead (Pb)			104.0		%		80-120	22-OCT-21
Selenium (Se)			108.0		%		80-120	22-OCT-21
Vanadium (V)			101.0		%		80-120	22-OCT-21
Zinc (Zn)			103.0		%		80-120	22-OCT-21
WG3643407-1 MB								
Arsenic (As)			<3.0		ug		3	22-OCT-21
Cadmium (Cd)			<0.027		ug		0.027	22-OCT-21
Cobalt (Co)			<0.030		ug		0.03	22-OCT-21
Chromium (Cr)			<3.4		ug		3.4	22-OCT-21
Copper (Cu)			<1.0		ug		1	22-OCT-21
Iron (Fe)			<12		ug		12	22-OCT-21
Manganese (Mn)			<0.45		ug		0.45	22-OCT-21
Nickel (Ni)			<0.25		ug		0.25	22-OCT-21
Lead (Pb)			<0.12		ug		0.12	22-OCT-21

[redacted]

Quality Control Report

Workorder: L2649276 Report Date: 01-NOV-21

Test	Matrix	Reference	Result	Qualifier	Units	RPD	Limit	Analyzed
MET-IO3.5-MS-BU	**Filter**							
Batch R5626710								
WG3643407-1 MB								
Selenium (Se)			<1.3		ug		1.25	22-OCT-21
Vanadium (V)			<5.0		ug		10	22-OCT-21
Zinc (Zn)			<4.5		ug		4.5	22-OCT-21
WG3643407-4 MS		**L2649276-1**						
Arsenic (As)			101.6		%		75-125	22-OCT-21
Cadmium (Cd)			108.6		%		75-125	22-OCT-21
Cobalt (Co)			104.2		%		75-125	22-OCT-21
Chromium (Cr)			100.3		%		75-125	22-OCT-21
Copper (Cu)			N/A	MS-B	%		-	22-OCT-21
Iron (Fe)			N/A	MS-B	%		-	22-OCT-21
Manganese (Mn)			102.6		%		75-125	22-OCT-21
Nickel (Ni)			102.1		%		75-125	22-OCT-21
Lead (Pb)			102.7		%		75-125	22-OCT-21
Selenium (Se)			105.6		%		75-125	22-OCT-21
Vanadium (V)			100.5		%		75-125	22-OCT-21
Zinc (Zn)			102.1		%		75-125	22-OCT-21
PART-HIVOL-GRAV-BU	**Filter**							
Batch R5625888								
WG3642485-4 DUP		**L2649276-1**						
Total particulate		31000	31200		ug	0.6	5	21-OCT-21
WG3642485-1 MB								
Total particulate			<100		ug		100	21-OCT-21
PART-M212 F-GRAV-BU	**Filter**							
Batch R5633462								
WG3649522-3 DUP		**L2649276-17**						
Total particulate		195	191		ug	2.1	10	01-NOV-21
WG3649522-1 MB								
Total particulate			<15		ug		15	01-NOV-21
WG3649522-2 MB								
Total particulate			<15		ug		15	01-NOV-21
DUSTFALLS-ALL-DM2-VA	**Dustfall**							
Batch R5632814								
WG3645723-1 MB								
Total Dustfall			<0.10		mg/dm2.day		0.1	26-OCT-21
Total Insoluble Dustfall			<0.10		mg/dm2.day		0.1	26-OCT-21

[redacted]

Quality Control Report

Test	Matrix	Reference	Result	Qualifier	Units	RPD	Limit	Analyzed
DUSTFALLS-ALL-DM2-VA	**Dustfall**							
Batch R5632814								
WG3645723-1 MB								
Total Soluble Dustfall			<0.10		mg/dm2.day		0.1	26-OCT-21
Fixed Dustfall			<0.10		mg/dm2.day		0.1	26-OCT-21
Fixed Insoluble Dustfall			<0.10		mg/dm2.day		0.1	26-OCT-21
Fixed Soluble Dustfall			<0.10		mg/dm2.day		0.1	26-OCT-21
Volatile Dustfall			<0.10		mg/dm2.day		0.1	26-OCT-21
Volatile Insoluble Dustfall			<0.10		mg/dm2.day		0.1	26-OCT-21
Volatile Soluble Dustfall			<0.10		mg/dm2.day		0.1	26-OCT-21
HG-DUST(DM2-CVAFS-VA	**Dustfall**							
Batch R5628983								
WG3645369-3 DUP		**L2649276-32**						
Mercury (Hg)-Total		<0.00000087	<0.0000008	RPD-NA	mg/dm2.day	N/A	20	26-OCT-21
WG3645369-2 LCS								
Mercury (Hg)-Total			85.8		%		70-130	26-OCT-21
WG3645369-1 MB								
Mercury (Hg)-Total			<0.0000013		mg/dm2.day		0.0000013	26-OCT-21
WG3645369-4 MS		**L2649276-33**						
Mercury (Hg)-Total			71.9		%		70-130	26-OCT-21
MET-DUST(DM2)-MS-VA	**Dustfall**							
Batch R5629542								
WG3645368-2 LCS								
Aluminum (Al)-Total			103.6		%		80-120	27-OCT-21
Antimony (Sb)-Total			107.6		%		80-120	27-OCT-21
Arsenic (As)-Total			101.3		%		80-120	27-OCT-21
Barium (Ba)-Total			105.7		%		80-120	27-OCT-21
Beryllium (Be)-Total			98.8		%		80-120	27-OCT-21
Bismuth (Bi)-Total			99.6		%		80-120	27-OCT-21
Boron (B)-Total			96.8		%		80-120	27-OCT-21
Cadmium (Cd)-Total			100.5		%		80-120	27-OCT-21
Calcium (Ca)-Total			101.5		%		80-120	27-OCT-21
Chromium (Cr)-Total			102.0		%		80-120	27-OCT-21
Cobalt (Co)-Total			101.1		%		80-120	27-OCT-21
Copper (Cu)-Total			102.2		%		80-120	27-OCT-21
Lead (Pb)-Total			100.5		%		80-120	27-OCT-21
Iron (Fe)-Total			97.7		%		80-120	27-OCT-21
Lithium (Li)-Total			100.4		%		80-120	27-OCT-21

Quality Control Report

Test	Matrix	Reference	Result	Qualifier	Units	RPD	Limit	Analyzed
MET-DUST(DM2)-MS-VA	**Dustfall**							
Batch R5629542								
WG3645368-2 LCS								
Magnesium (Mg)-Total			102.5		%		80-120	27-OCT-21
Manganese (Mn)-Total			107.2		%		80-120	27-OCT-21
Molybdenum (Mo)-Total			108.5		%		80-120	27-OCT-21
Nickel (Ni)-Total			102.8		%		80-120	27-OCT-21
Phosphorus (P)-Total			123.7	MES	%		80-120	27-OCT-21
Potassium (K)-Total			105.9		%		80-120	27-OCT-21
Selenium (Se)-Total			102.7		%		80-120	27-OCT-21
Silicon (Si)-Total			103.7		%		80-120	27-OCT-21
Silver (Ag)-Total			95.8		%		80-120	27-OCT-21
Sodium (Na)-Total			107.5		%		80-120	27-OCT-21
Strontium (Sr)-Total			111.7		%		80-120	27-OCT-21
Thallium (Tl)-Total			96.9		%		80-120	27-OCT-21
Tin (Sn)-Total			102.9		%		80-120	27-OCT-21
Titanium (Ti)-Total			105.2		%		80-120	27-OCT-21
Uranium (U)-Total			109.7		%		80-120	27-OCT-21
Vanadium (V)-Total			103.8		%		80-120	27-OCT-21
Zinc (Zn)-Total			102.9		%		80-120	27-OCT-21
WG3645368-1 MB								
Aluminum (Al)-Total			<0.000079		mg/dm2.day		0.000079	27-OCT-21
Antimony (Sb)-Total			<0.0000026		mg/dm2.day		0.0000026	27-OCT-21
Arsenic (As)-Total			<0.0000026		mg/dm2.day		0.0000026	27-OCT-21
Barium (Ba)-Total			<0.0000013		mg/dm2.day		0.0000013	27-OCT-21
Beryllium (Be)-Total			<0.000013		mg/dm2.day		0.000013	27-OCT-21
Bismuth (Bi)-Total			<0.000013		mg/dm2.day		0.000013	27-OCT-21
Boron (B)-Total			<0.00026		mg/dm2.day		0.00026	27-OCT-21
Cadmium (Cd)-Total			<0.0000013		mg/dm2.day		0.0000013	27-OCT-21
Calcium (Ca)-Total			<0.00052		mg/dm2.day		0.00052	27-OCT-21
Chromium (Cr)-Total			<0.000013		mg/dm2.day		0.000013	27-OCT-21
Cobalt (Co)-Total			<0.0000026		mg/dm2.day		0.0000026	27-OCT-21
Copper (Cu)-Total			<0.000013		mg/dm2.day		0.000013	27-OCT-21
Lead (Pb)-Total			<0.0000013		mg/dm2.day		0.0000013	27-OCT-21
Iron (Fe)-Total			<0.00079		mg/dm2.day		0.00079	27-OCT-21
Lithium (Li)-Total			<0.00013		mg/dm2.day		0.00013	27-OCT-21
Magnesium (Mg)-Total			<0.00013		mg/dm2.day		0.00013	27-OCT-21

Quality Control Report

Test	Matrix	Reference	Result	Qualifier	Units	RPD	Limit	Analyzed
MET-DUST(DM2)-MS-VA	**Dustfall**							
Batch R5629542								
WG3645368-1 MB								
Manganese (Mn)-Total			<0.0000026		mg/dm2.day		0.0000026	27-OCT-21
Molybdenum (Mo)-Total			<0.0000013		mg/dm2.day		0.0000013	27-OCT-21
Nickel (Ni)-Total			<0.000013		mg/dm2.day		0.000013	27-OCT-21
Phosphorus (P)-Total			<0.0013		mg/dm2.day		0.0013	27-OCT-21
Potassium (K)-Total			<0.0013		mg/dm2.day		0.0013	27-OCT-21
Selenium (Se)-Total			<0.000026		mg/dm2.day		0.000026	27-OCT-21
Silicon (Si)-Total			<0.0013		mg/dm2.day		0.0013	27-OCT-21
Silver (Ag)-Total			<0.0000002		mg/dm2.day		0.00000026	27-OCT-21
Sodium (Na)-Total			<0.0013		mg/dm2.day		0.0013	27-OCT-21
Strontium (Sr)-Total			<0.0000026		mg/dm2.day		0.0000026	27-OCT-21
Thallium (Tl)-Total			<0.0000026		mg/dm2.day		0.0000026	27-OCT-21
Tin (Sn)-Total			<0.0000026		mg/dm2.day		0.0000026	27-OCT-21
Titanium (Ti)-Total			<0.00026		mg/dm2.day		0.00026	27-OCT-21
Uranium (U)-Total			<0.0000002		mg/dm2.day		0.00000026	27-OCT-21
Vanadium (V)-Total			<0.000026		mg/dm2.day		0.000026	27-OCT-21
Zinc (Zn)-Total			<0.000079		mg/dm2.day		0.000079	27-OCT-21
Batch R5632883								
WG3647120-3 DUP		**L2649276-32**						
Aluminum (Al)-Total		0.00642	0.00633		mg/dm2.day	4.9	20	29-OCT-21
Antimony (Sb)-Total		<0.0000017	<0.0000017	RPD-NA	mg/dm2.day	N/A	20	29-OCT-21
Arsenic (As)-Total		0.0000066	0.0000064		mg/dm2.day	9.9	20	29-OCT-21
Barium (Ba)-Total		0.0000417	0.0000488		mg/dm2.day	14	20	29-OCT-21
Beryllium (Be)-Total		<0.0000087	<0.0000087	RPD-NA	mg/dm2.day	N/A	20	29-OCT-21
Bismuth (Bi)-Total		<0.0000087	<0.0000087	RPD-NA	mg/dm2.day	N/A	20	29-OCT-21
Boron (B)-Total		<0.00017	<0.00017	RPD-NA	mg/dm2.day	N/A	20	29-OCT-21
Cadmium (Cd)-Total		0.00000315	0.00000310		mg/dm2.day	1.1	20	29-OCT-21
Calcium (Ca)-Total		0.0125	0.0140		mg/dm2.day	1.9	20	29-OCT-21
Chromium (Cr)-Total		0.0000107	0.0000092		mg/dm2.day	14	20	29-OCT-21
Cobalt (Co)-Total		0.0000022	0.0000023		mg/dm2.day	12	20	29-OCT-21
Copper (Cu)-Total		0.0000631	0.0000655		mg/dm2.day	6.1	20	29-OCT-21
Lead (Pb)-Total		0.0000312	0.0000308		mg/dm2.day	1.2	20	29-OCT-21
Iron (Fe)-Total		0.00450	0.00443		mg/dm2.day	3.6	20	29-OCT-21
Lithium (Li)-Total		<0.000087	<0.000087	RPD-NA	mg/dm2.day	N/A	20	29-OCT-21
Magnesium (Mg)-Total		0.00467	0.00456		mg/dm2.day	0.5	20	29-OCT-21

[redacted]

Quality Control Report

Test	Matrix	Reference	Result	Qualifier	Units	RPD	Limit	Analyzed
MET-DUST(DM2)-MS-VA	**Dustfall**							
Batch R5632883								
WG3647120-3 DUP		**L2649276-32**						
Manganese (Mn)-Total		0.000237	0.000248		mg/dm2.day	1.2	20	29-OCT-21
Molybdenum (Mo)-Total		0.00000223	0.00000227		mg/dm2.day	8.6	20	29-OCT-21
Nickel (Ni)-Total		0.0000088	<0.0000087	RPD-NA	mg/dm2.day	N/A	20	29-OCT-21
Phosphorus (P)-Total		0.0126	0.0119		mg/dm2.day	7.8	20	29-OCT-21
Potassium (K)-Total		0.0213	0.0208		mg/dm2.day	2.0	20	29-OCT-21
Selenium (Se)-Total		<0.000017	<0.000017	RPD-NA	mg/dm2.day	N/A	20	29-OCT-21
Silicon (Si)-Total		0.0108	0.00918		mg/dm2.day	16	20	29-OCT-21
Sodium (Na)-Total		0.00667	0.00681		mg/dm2.day	4.4	20	29-OCT-21
Strontium (Sr)-Total		0.0000419	0.0000413		mg/dm2.day	0.8	20	29-OCT-21
Thallium (Tl)-Total		<0.0000017	<0.0000017	RPD-NA	mg/dm2.day	N/A	20	29-OCT-21
Tin (Sn)-Total		<0.0000017	<0.0000017	RPD-NA	mg/dm2.day	N/A	20	29-OCT-21
Titanium (Ti)-Total		<0.00017	<0.00017	RPD-NA	mg/dm2.day	N/A	20	29-OCT-21
Uranium (U)-Total		0.00000017	0.00000018		mg/dm2.day	6.0	20	29-OCT-21
Vanadium (V)-Total		<0.000017	<0.000017	RPD-NA	mg/dm2.day	N/A	20	29-OCT-21
Zinc (Zn)-Total		0.000324	0.000325		mg/dm2.day	4.7	20	29-OCT-21
WG3647120-2 LCS								
Aluminum (Al)-Total			100.3		%		80-120	29-OCT-21
Antimony (Sb)-Total			105.3		%		80-120	29-OCT-21
Arsenic (As)-Total			98.9		%		80-120	29-OCT-21
Barium (Ba)-Total			100.9		%		80-120	29-OCT-21
Beryllium (Be)-Total			97.3		%		80-120	29-OCT-21
Bismuth (Bi)-Total			97.9		%		80-120	29-OCT-21
Boron (B)-Total			87.5		%		80-120	29-OCT-21
Cadmium (Cd)-Total			93.1		%		80-120	29-OCT-21
Calcium (Ca)-Total			97.0		%		80-120	29-OCT-21
Chromium (Cr)-Total			100.2		%		80-120	29-OCT-21
Cobalt (Co)-Total			98.8		%		80-120	29-OCT-21
Copper (Cu)-Total			98.5		%		80-120	29-OCT-21
Lead (Pb)-Total			100.5		%		80-120	29-OCT-21
Iron (Fe)-Total			96.6		%		80-120	29-OCT-21
Lithium (Li)-Total			98.1		%		80-120	29-OCT-21
Magnesium (Mg)-Total			97.3		%		80-120	29-OCT-21
Manganese (Mn)-Total			101.5		%		80-120	29-OCT-21
Molybdenum (Mo)-Total			101.8		%		80-120	29-OCT-21

[redacted]

Quality Control Report

Test	Matrix	Reference	Result	Qualifier	Units	RPD	Limit	Analyzed
MET-DUST(DM2)-MS-VA	**Dustfall**							
Batch R5632883								
WG3647120-2 LCS								
Nickel (Ni)-Total			98.4		%		80-120	29-OCT-21
Phosphorus (P)-Total			108.6		%		80-120	29-OCT-21
Potassium (K)-Total			102.6		%		80-120	29-OCT-21
Selenium (Se)-Total			101.2		%		80-120	29-OCT-21
Silicon (Si)-Total			100.7		%		80-120	29-OCT-21
Silver (Ag)-Total			86.9		%		80-120	29-OCT-21
Sodium (Na)-Total			102.0		%		80-120	29-OCT-21
Strontium (Sr)-Total			98.4		%		80-120	29-OCT-21
Thallium (Tl)-Total			94.4		%		80-120	29-OCT-21
Tin (Sn)-Total			93.4		%		80-120	29-OCT-21
Titanium (Ti)-Total			95.2		%		80-120	29-OCT-21
Uranium (U)-Total			97.3		%		80-120	29-OCT-21
Vanadium (V)-Total			101.2		%		80-120	29-OCT-21
Zinc (Zn)-Total			100.1		%		80-120	29-OCT-21
WG3647120-1 MB								
Aluminum (Al)-Total			<0.000079		mg/dm2.day		0.000079	29-OCT-21
Antimony (Sb)-Total			<0.0000026		mg/dm2.day		0.0000026	29-OCT-21
Arsenic (As)-Total			<0.0000026		mg/dm2.day		0.0000026	29-OCT-21
Barium (Ba)-Total			<0.0000013		mg/dm2.day		0.0000013	29-OCT-21
Beryllium (Be)-Total			<0.000013		mg/dm2.day		0.000013	29-OCT-21
Bismuth (Bi)-Total			<0.000013		mg/dm2.day		0.000013	29-OCT-21
Boron (B)-Total			<0.00026		mg/dm2.day		0.00026	29-OCT-21
Cadmium (Cd)-Total			<0.0000013		mg/dm2.day		0.0000013	29-OCT-21
Calcium (Ca)-Total			<0.00052		mg/dm2.day		0.00052	29-OCT-21
Chromium (Cr)-Total			<0.000013		mg/dm2.day		0.000013	29-OCT-21
Cobalt (Co)-Total			<0.0000026		mg/dm2.day		0.0000026	29-OCT-21
Copper (Cu)-Total			<0.000013		mg/dm2.day		0.000013	29-OCT-21
Lead (Pb)-Total			<0.0000013		mg/dm2.day		0.0000013	29-OCT-21
Iron (Fe)-Total			<0.00079		mg/dm2.day		0.00079	29-OCT-21
Lithium (Li)-Total			<0.00013		mg/dm2.day		0.00013	29-OCT-21
Magnesium (Mg)-Total			<0.00013		mg/dm2.day		0.00013	29-OCT-21
Manganese (Mn)-Total			0.0000033	B	mg/dm2.day		0.0000026	29-OCT-21
Molybdenum (Mo)-Total			<0.0000013		mg/dm2.day		0.0000013	29-OCT-21
Nickel (Ni)-Total			<0.000013		mg/dm2.day		0.000013	29-OCT-21

Quality Control Report

Test	Matrix	Reference	Result	Qualifier	Units	RPD	Limit	Analyzed
MET-DUST(DM2)-MS-VA	**Dustfall**							
Batch R5632883								
WG3647120-1 MB								
Phosphorus (P)-Total			<0.0013		mg/dm2.day		0.0013	29-OCT-21
Potassium (K)-Total			<0.0013		mg/dm2.day		0.0013	29-OCT-21
Selenium (Se)-Total			<0.000026		mg/dm2.day		0.000026	29-OCT-21
Silicon (Si)-Total			<0.0013		mg/dm2.day		0.0013	29-OCT-21
Silver (Ag)-Total			<0.0000002		mg/dm2.day		0.00000026	29-OCT-21
Sodium (Na)-Total			<0.0013		mg/dm2.day		0.0013	29-OCT-21
Strontium (Sr)-Total			<0.0000026		mg/dm2.day		0.0000026	29-OCT-21
Thallium (Tl)-Total			<0.0000026		mg/dm2.day		0.0000026	29-OCT-21
Tin (Sn)-Total			<0.0000026		mg/dm2.day		0.0000026	29-OCT-21
Titanium (Ti)-Total			<0.00026		mg/dm2.day		0.00026	29-OCT-21
Uranium (U)-Total			<0.0000002		mg/dm2.day		0.00000026	29-OCT-21
Vanadium (V)-Total			<0.000026		mg/dm2.day		0.000026	29-OCT-21
Zinc (Zn)-Total			<0.000079		mg/dm2.day		0.000079	29-OCT-21

Quality Control Report

Legend:

Limit	ALS Control Limit (Data Quality Objectives)
DUP	Duplicate
RPD	Relative Percent Difference
N/A	Not Available
LCS	Laboratory Control Sample
SRM	Standard Reference Material
MS	Matrix Spike
MSD	Matrix Spike Duplicate
ADE	Average Desorption Efficiency
MB	Method Blank
IRM	Internal Reference Material
CRM	Certified Reference Material
CCV	Continuing Calibration Verification
CVS	Calibration Verification Standard
LCSD	Laboratory Control Sample Duplicate

Sample Parameter Qualifier Definitions:

Qualifier	Description
B	Method Blank exceeds ALS DQO. Associated sample results which are < Limit of Reporting or > 5 times blank level are considered reliable.
MES	Data Quality Objective was marginally exceeded (by < 10% absolute) for < 10% of analytes in a Multi-Element Scan / Multi-Parameter Scan (considered acceptable as per OMOE & CCME).
MS-B	Matrix Spike recovery could not be accurately calculated due to high analyte background in sample.
RPD-NA	Relative Percent Difference Not Available due to result(s) being less than detection limit.

Hold Time Exceedances:

All test results reported with this submission were conducted within ALS recommended hold times.

ALS recommended hold times may vary by province. They are assigned to meet known provincial and/or federal government requirements. In the absence of regulatory hold times, ALS establishes recommendations based on guidelines published by the US EPA, APHA Standard Methods, or Environment Canada (where available). For more information, please contact ALS.

The ALS Quality Control Report is provided to ALS clients upon request. ALS includes comprehensive QC checks with every analysis to ensure our high standards of quality are met. Each QC result has a known or expected target value, which is compared against pre-determined data quality objectives to provide confidence in the accuracy of associated test results.

Please note that this report may contain QC results from anonymous Sample Duplicates and Matrix Spikes that do not originate from this Work Order.

ALS Environmental

Chain of Custody / Analytical Request Form
1435 Norjohn Court, Unit 1, Burlington, Ontario, Canada, L7L 0E6
Tel +1-905-331-3111 Fax +1-905-331-4567 www.alsglobal.com

Report To		Report Format / Distribution		Service Requested
Company:	New Gold Inc.	☑ Standard ☐ Other:		☑ Regular Service
Contact:	Sarah Flesher	☑ PDF ☑ Excel ☐ Digital ☐ Fax		☐ Rush Service (with prior consultation) - surcharge applies
Address:	24 Marr Rd. Barwick ON P0W 1A0	Email 1:	sarah.flesher@newgold.com	☐ Other - Please contact ALS
Phone:	807-234-8200 ext. 8049 Fax:	Email 2:		
Invoice To	Same as Report ? ☑ Yes ☐ No	Client / Project Information		Analysis Request
Company:		Job #:	Air Quality	
Contact:		Location:		
Address:		PO:	450000093	
Phone:	Fax:	Sampled by:		
Lab Work Order #		ALS Contact:		

Sample #	Sample Identification (This description will appear on the report)	Date (dd-mmm-yy)	Time (hh:mm)	Sample Type	TSP and Metals	Pm 2.5	Dustfall Incl. volatile								Hazardous? Provide Data
1	SOUTH-TSP-381	1-Sep-2021	12:00	Air	X										
2	SOUTH-TSP-382	7-Sep-2021	12:00	Air	X										
3	SOUTH-TSP-383	13-Sep-2021	12:00	Air	X										
4	SOUTH-TSP-384	19-Sep-2021	12:00	Air	X										
5	SOUTH-TSP-385	25-Sep-2021	12:00	Air	X										
6	NORTH-TSP-381	1-Sep-2021	12:00	Air	X										
7	NORTH-TSP-382	7-Sep-2021	12:00	Air	X										
8	NORTH-TSP-383	13-Sep-2021	12:00	Air	X										
9	NORTH-TSP-384	19-Sep-2021	12:00	Air	X										
10	NORTH-TSP-385	25-Sep-2021	12:00	Air	X										
11	NORTHWEST-TSP-381	1-Sep-2021	12:00	Air	X										
12	NORTHWEST-TSP-382	7-Sep-2021	12:00	Air	X										
13	NORTHWEST-TSP-383	13-Sep-2021	12:00	Air	X										
14	NORTHWEST-TSP-384	19-Sep-2021	12:00	Air	X										
15	NORTHWEST-TSP-385	25-Sep-2021	12:00	Air	X										
17	SOUTH-PM2.5-381	1-Sep-2021	12:00	Air		X									
18	SOUTH-PM2.5-382	7-Sep-2021	12:00	Air		X									
19	SOUTH-PM2.5-383	13-Sep-2021	12:00	Air		X									
20	SOUTH-PM2.5-384	19-Sep-2021	12:00	Air		X									
21	SOUTH-PM2.5-385	25-Sep-2021	12:00	Air		X									
22	NORTH-PM2.5-381	1-Sep-2021	12:00	Air		X									
23	NORTH-PM2.5-382	7-Sep-2021	12:00	Air		X									
24	NORTH-PM2.5-383	13-Sep-2021	12:00	Air		X									
25	NORTH-PM2.5-384	19-Sep-2021	12:00	Air		X									
26	NORTH-PM2.5-385	25-Sep-2021	12:00	Air		X									
27	NORTHWEST-PM2.5-381	1-Sep-2021	12:00	Air		X									
28	NORTHWEST-PM2.5-382	7-Sep-2021	12:00	Air		X									
29	NORTHWEST-PM2.5-383	13-Sep-2021	12:00	Air		X									
30	NORTHWEST-PM2.5-384	19-Sep-2021	12:00	Air		X									
16	TSP Travel Blank	5-Oct-2021	12:00	Air	X										
~~28~~ 31	PM2.5 Travel Blank	5-Oct-2021	12:00	Air		X									
31 32	NOP1-Dustfall-9	1-Oct-2021	12:00	Air			X								
32 33	CP1-Dustfall-9	1-Oct-2021	12:00	Air			X								
33 34	WCP1-Dustfall-9	1-Oct-2021	12:00	Air			X								
~~34~~ 35	GH1-Dustfall-9	1-Oct-2021	12:00	Air			X								
~~35~~ 36	SPP1-Dustfall-38	1-Sep-2021	12:00	Air			X								
~~36~~ 37	SPP1-Dustfall-39	8-Sep-2021	12:00	Air			X								
~~37~~ 38	SPP1-Dustfall-40	15-Sep-2021	12:00	Air			X								
~~38~~ 39	SPP1-Dustfall-41	22-Sep-2021	12:00	Air			X								
~~39~~ 40	Dustfall - Gallinger Road	1-Oct-2021	12:00	Air			X								
~~40~~ 41	Dustfall - Tait Road (South)	1-Oct-2021	12:00	Air			X								
~~41~~ 42	Dustfall- Northwest	1-Oct-2021	12:00	Air			X								

Special Instructions / Regulations / Hazardous Details

Please Note: Dustfall canisters are empty/ only partially full, please follow-through with sample analysis

By the use of this form the user acknowledges and agrees with the Terms and Conditions as provided by ALS

Released by:	Date (dd-mmm-yy)	Time (hh-mm)	Received by:	Date:	Time:	Temperature:	Verified by:	Date:	Time:	Observations Yes / If Yes
	5-Oct-2021	11:00	AARON BURTON	7-OCT-2021	14:00	20.2°C °C				

L2649276-COFC

ALS Environmental

BV Labs Job Number: C157027
Report Date: 2021/08/14

Client Project #: TC111504.2015.6
Site Location: NEW GOLD - EMO, ON
Your P.O. #: 4500022601
Sampler Initials: SF

RESULTS OF CHEMICAL ANALYSES OF AIR

BV Labs ID		ADJ363	ADJ364		
Sampling Date		2021-06-30	2021-06-30		
	UNITS	**RRP SOUTH**	**RRP NORTH**	**RDL**	**QC Batch**
Passive Monitoring					
Calculated NO2	ppb	1.0	0.5	0.1	A313778
Calculated SO2	ppb	<0.1	<0.1	0.1	A314466

RDL = Reportable Detection Limit

Results relate only to the items tested.

GENERAL COMMENTS

Results relate only to the items tested.

Report Date: 2021/08/14

ALS Environmental
Attention: Claire Kocharakkal
Client Project #: TC111504.2015.6
Your P.O. #:4500022601
Site Location: NEW GOLD - EMO, ON

Quality Assurance Report
BV Labs Job Number: C157027

QA/QC Ba	Init	QC Type	Parameter	Date Analy	Value	Recovery	UNITS	QC Limits
A313778	XSZ	Spiked Blank	Calculated NO2			100	%	90 - 110
A313778	XSZ	Method Blank	Calculated NO2		<0.1		ppb	
A314466	OZ	Spiked Blank	Calculated SO2			103	%	90 - 110
A314466	OZ	Method Blank	Calculated SO2		<0.1		ppb	

Spiked Blank: A blank matrix sample to which a known amount of the analyte, usually from a second source, has been added. Used to evaluate method accuracy.
Method Blank: A blank matrix containing all reagents used in the analytical procedure. Used to identify laboratory contamination.

ALS Environmental

BV Labs Job Number: C168075
Report Date: 2021/09/20

Client Project #: TC111504.2015.6
Site Location: NEW GOLD - EMO, ON

Sampler Initials: KH

RESULTS OF CHEMICAL ANALYSES OF AIR

BV Labs ID		AFV724	AFV725		
Sampling Date		2021-07-29	2021-07-29		
	UNITS	**RRP SOUTH**	**RRP NORTH**	**RDL**	**QC Batch**
Passive Monitoring					
Calculated NO2	ppb	0.3	0.3	0.1	A350644
Calculated SO2	ppb	<0.1	<0.1	0.1	A351665

RDL = Reportable Detection Limit

Results relate only to the items tested.

GENERAL COMMENTS

Results relate only to the items tested.

ALS Environmental
Attention: Claire Kocharakkal
Client Project #: TC111504.2015.6

Report Date: 2021/09/20

Site Location: NEW GOLD - EMO, ON

Quality Assurance Report
BV Labs Job Number: C168075

QA/QC Ba	Init	QC Type	Parameter	Date Anal	Value	Recovery	UNITS	QC Limits
A350644	XSZ	Spiked Blank	Calculated NO2			104	%	90 - 110
A350644	XSZ	Method Blank	Calculated NO2		<0.1		ppb	
A351665	OZ	Spiked Blank	Calculated SO2			101	%	90 - 110
A351665	OZ	Method Blank	Calculated SO2		<0.1		ppb	

Spiked Blank: A blank matrix sample to which a known amount of the analyte, usually from a second source, has been added. Used to evaluate method accuracy.
Method Blank: A blank matrix containing all reagents used in the analytical procedure. Used to identify laboratory contamination.

ALS Environmental

Bureau Veritas Job Number: C176765 Client Project #: 2021/08/31 - 2021/10/01

Report Date: 2021/10/18 Site Location: NEW GOLD - EMO, ON

Sampler Initials: KH

RESULTS OF CHEMICAL ANALYSES OF AIR

Bureau Veritas ID		AHW149	AHW150		
Sampling Date		2021-08-31	2021-08-31		
	UNITS	**RRP SOUTH**	**RRP NORTH**	**RDL**	**QC Batch**
Passive Monitoring					
Calculated NO2	ppb	0.6	0.4	0.1	A385192
Calculated SO2	ppb	<0.1	<0.1	0.1	A386904

RDL = Reportable Detection Limit

Results relate only to the items tested.

GENERAL COMMENTS

Results relate only to the items tested.

ALS Environmental
Attention: Claire Kocharakkal
Client Project #: 2021/08/31 - 2021/10/01

Report Date: 2021/10/18

Site Location: NEW GOLD - EMO, ON

Quality Assurance Report
Bureau Veritas Job Number: C176765

QA/QC Ba	Init	QC Type	Parameter	Date Analy	Value	Recovery	UNITS	QC Limits
A385192	XSZ	Spiked Blank	Calculated NO2			106	%	90 - 110
A385192	XSZ	Method Blank	Calculated NO2		<0.1		ppb	
A386904	OZ	Spiked Blank	Calculated SO2			97	%	90 - 110
A386904	OZ	Method Blank	Calculated SO2		<0.1		ppb	

Spiked Blank: A blank matrix sample to which a known amount of the analyte, usually from a second source, has been added. Used to evaluate method accuracy.
Method Blank: A blank matrix containing all reagents used in the analytical procedure. Used to identify laboratory contamination.

APPENDIX D:
HI-VOL & PQ200 SAMPLER CALIBRATION SHEETS

Site Information

Location: South	**Site ID:** 145	**Date:** 13-08-2021
Sampler: 'E-5170 MFC	**Serial No:** 367	**Tech:** Jim Tisch

Site Conditions

Barometric Pressure (in Hg): 28.62	**Corrected Pressure (mm Hg):** 727
Temperature (deg F): 63	**Temperature (deg K):** 290
Average Press. (in Hg): 28.62	**Corrected Average (mm Hg):** 727
Average Temp. (deg F): 64	**Average Temp. (deg K):** 291

Calibration Orifice

Make: Tisch	**Qstd Slope:** 1.67418
Model: TE-5028A	**Qstd Intercept:** -0.02696
Serial#: 1179	**Date Certified:** 2020-Jul-06

Calibration Information

Plate or Test #	H2O (in)	Qstd (m3/min)	I (chart)	IC (corrected)
1	5.15	1.359	50.0	49.54
2	3.84	1.176	44.0	43.59
3	3.12	1.061	41.0	40.62
4	2.30	0.914	35.0	34.68
5	1.90	0.832	34.0	33.68

Linear Regression

Slope: 31.0900
Intercept: 7.2082
Corr. Coeff: 0.9957
# of Observations: 5

Calculations

Qstd = 1/m[Sqrt(H2O(Pa/Pstd)(Tstd/Ta))-b]
IC = I[Sqrt(Pa/Pstd)(Tstd/Ta)]

Qstd = standard flow rate
IC = corrected chart response
I = actual chart response
m = calibrator Qstd slope
b = calibrator Qstd intercept
Ta = actual temperature during calibration (deg K)
Pa = actual pressure during calibration (mm Hg)
Tstd = 298 deg K
Pstd = 760 mm Hg
For subsequent calculation of sampler flow:
1/m((I)[Sqrt(298/Tav)(Pav/760)]-b)

m = sampler slope
b = sampler intercept
I = chart response
Tav = daily average temperature
Pav = daily average pressure

Average I (chart): 44.0
Average Flow Calculation m3/min
1.169873793
Average Flow Calculation in CFM
41.30824364
Sample Time (Hrs): 24.0
Total Flow in m3/min
1684.618262
Total Flow in CFM
59483.87084

NOTE: Ensure calibration orifice has been certified within 12 months of use

TE-5170 Calibration Worksheet

Site Information

Location: Cleves, Ohio	**Site ID:** 145	**Date:** 13-Aug-21
Sampler: TE-5170 MFC	**Serial No:** 367	**Tech:** Jim Tisch

Site Conditions

Barometric Pressure (in Hg): 28.62	**Corrected Pressure (mm Hg):** 727
Temperature (deg F): 52	**Temperature (deg K):** 284
Average Press. (in Hg): 28.62	**Corrected Average (mm Hg):** 727
Average Temp. (deg F): 70	**Average Temp. (deg K):** 294

Calibration Orifice

Make: Tisch	**Qstd Slope:** 1.67418
Model: TE-5028A	**Qstd Intercept:** -0.02696
Serial#: 1179	**Date Certified:** 6-Jul-20

Calibration Information

Plate or Test #	H2O (in)	Qstd (m3/min)	I (chart)	IC (corrected)
1	4.93	1.344	52.0	52.07
2	4.15	1.234	48.0	48.06
3	3.17	1.081	44.0	44.06
4	2.52	0.966	40.0	40.05
5	1.95	0.851	36.0	36.05

Linear Regression

Slope: 31.8319
Intercept: 9.1928
Corr. Coeff: 0.9985
# of Observations: 5

Calculations

Qstd = 1/m[Sqrt(H2O(Pa/Pstd)(Tstd/Ta))-b]
IC = I[Sqrt(Pa/Pstd)(Tstd/Ta)]

Qstd = standard flow rate
IC = corrected chart response
I = actual chart response
m = calibrator Qstd slope
b = calibrator Qstd intercept
Ta = actual temperature during calibration (deg K)
Pa = actual pressure during calibration (mm Hg)
Tstd = 298 deg K
Pstd = 760 mm Hg
For subsequent calculation of sampler flow:
1/m((I)[Sqrt(298/Tav)(Pav/760)]-b)

m = sampler slope
b = sampler intercept
I = chart response
Tav = daily average temperature
Pav = daily average pressure

Average I (chart): 44.0
Average Flow Calculation m3/min
1.07198671
Average Flow Calculation in CFM
37.85185071
Sample Time (Hrs): 24.0
Total Flow in m3/min
1543.660862
Total Flow in CFM
54506.66503

NOTE: Ensure calibration orifice has been certified within 12 months of use

TE-5170 Calibration

Site Information

Location: Northwest	**Site ID:** 145	**Date:** 13-Aug-21
Sampler: 'E-5170 MFC	**Serial No:** 367	**Tech:** S.Flesher, R.Lloyd

Site Conditions

Barometric Pressure (in Hg): 28.78	**Corrected Pressure (mm Hg):** 731
Temperature (deg F): 61	**Temperature (deg K):** 289
Average Press. (in Hg): 28.78	**Corrected Average (mm Hg):** 731
Average Temp. (deg F): 61	**Average Temp. (deg K):** 289

Calibration Orifice

Make: Tisch	**Qstd Slope:** 1.67418
Model: TE-5028A	**Qstd Intercept:** -0.02696
Serial#: 1179	**Date Certified:** 2020-Jul-06

Calibration Information

Plate or Test #	H2O (in)	Qstd (m3/min)	I (chart)	IC (corrected)
1	6.16	1.492	50.0	49.77
2	5.32	1.387	46.0	45.79
3	4.50	1.277	44.0	43.80
4	3.76	1.169	40.0	39.82
5	2.89	1.027	36.0	35.83

Linear Regression

Slope: 29.4568
Intercept: 5.5767
Corr. Coeff: 0.9962
# of Observations: 5

Calculations

Qstd = 1/m[Sqrt(H2O(Pa/Pstd)(Tstd/Ta))-b]
IC = I[Sqrt(Pa/Pstd)(Tstd/Ta)]

Qstd = standard flow rate
IC = corrected chart response
I = actual chart response
m = calibrator Qstd slope
b = calibrator Qstd intercept
Ta = actual temperature during calibration (deg K)
Pa = actual pressure during calibration (mm Hg)
Tstd = 298 deg K
Pstd = 760 mm Hg
For subsequent calculation of sampler flow:
1/m((I)[Sqrt(298/Tav)(Pav/760)]-b)

m = sampler slope
b = sampler intercept
I = chart response
Tav = daily average temperature
Pav = daily average pressure

Average I (chart): 44.0
Average Flow Calculation m3/min
1.297981185
Average Flow Calculation in CFM
45.83171566
Sample Time (Hrs): 24.0
Total Flow in m3/min
1869.092907
Total Flow in CFM
65997.67055

NOTE: Ensure calibration orifice has been certified within 12 months of use

APPENDIX E:
SAMPLE EDIT LOGS

APPENDIX E-1: TOTAL SUSPENDED PARTICULATE SAMPLE EDIT LOG

Emitter: New Gold Inc.

Address: Rainy River Mine

Station Name: Tait Road Station

Station Location: Near McMillan Road along the realigned Highway 600

Pollutant/Parameter: Total Suspended Particulate (TSP)

Measurement Instrument: High Volume (Hi-Vol) Sampler

Start Date: July 1, 2021

End Date: September 30, 2021

#	Action	Date	Reason
1	Invalid sample	Aug 20	Sample air volume (1,332 m^3) was below the minimum allowable volume (1,468 m^3)
2	Invalid sample	Sept 19	Sample air volume (1,271 m^3) was below the minimum allowable volume (1,468 m^3)
3	Invalid sample	Sept 25	Sample air volume (1,377 m^3) was below the minimum allowable volume (1,468 m^3)

APPENDIX E-2: RESPIRABLE PARTICULATE MATTER SAMPLE EDIT LOG

Emitter: New Gold Inc.

Address: Rainy River Mine

Station Name: Tait Road Station

Station Location: Near McMillan Road along the realigned Highway 600

Pollutant/Parameter: Respirable Particulate Matter ($PM_{2.5}$)

Measurement Instrument: PQ200 Sampler

Start Date: July 1, 2021

End Date: September 30, 2021

#	Action	Date	Reason
1	Invalid sample	Aug 2	Sample air volume (45.15 m^3) was above the maximum allowable volume (26.4 m^3)

Emitter: New Gold Inc.

Address: Rainy River Mine

Station Name: Gallinger Road Station

Station Location: North-east of the Site along Gallinger Road

Pollutant/Parameter: Respirable Particulate Matter ($PM_{2.5}$)

Measurement Instrument: PQ200 Sampler

Start Date: July 1, 2021

End Date: September 30, 2021

#	Action	Date	Reason
1	Invalid sample	July 9	Sample air volume (72.08 m^3) was above the maximum allowable volume (26.4 m^3)
2	Invalid sample	Sept 19	Sample air volume (21.11 m^3) was below the minimum allowable volume (21.6 m^3)

Emitter: New Gold Inc.

Address: Rainy River Mine

Station Name: Northwest Station

Station Location: North-west of the Site at Tailings Management Area

Pollutant/Parameter: Respirable Particulate Matter ($PM_{2.5}$)

Measurement Instrument: PQ200 Sampler

Start Date: July 1, 2021

End Date: September 30, 2021

#	Action	Date	Reason
1	Invalid sample	July 9	Sample air volume (72.14 m^3) was above the maximum allowable volume (26.4 m^3)
2	Equipment repairs	Sept 25	Sampler sent out for repairs prior to sample

APPENDIX E-3: DUSTFALL SAMPLE EDIT LOG

Emitter: New Gold Inc.

Address: Rainy River Mine

Station Name: Northwest Station

Station Location: North-west of the Site at Tailings Management Area

Pollutant/Parameter: Dustfall

Measurement Instrument: Passive Sampler Jar

Start Date: July 1, 2021

End Date: September 30, 2021

#	Action	Date	Reason
1	Invalid samples	August 2021 September 2021	The passive sampler was accidentally left out for August and September 2021.

APPENDIX F:
MECP AUDIT

Ministry of the Environment
435 James Street South.
Suite 331
Thunder Bay, ON P7E 6S7

Ministère de l'Environnement
435, rue James sud
Bureau 331
Thunder Bay, ON P7E 6S7

Ontario

Fax/télécopieur: (807) 475-1754
Phone/ téléphone: (807) 475-1205

Northern Region Technical Support Section – Thunder Bay

September 13, 2021

Sarah Flesher
Environmental Specialist

New Gold Inc.
Rainy River Mine
5967 Highway 11/71, P.O. Box 5
Emo, Ontario, Canada, P0W 1E0
T +1.807.234.8200 ext. 8049
M +1.705.918.4696

Dear Ms. Flesher:

Re: Air Monitoring Station Audit – Non-Continuous Monitors

On September 09th 2021 your company's station [s] were audited. Attached is a copy of the Audit record, below is a summary of the results:

1. Tait Road (Station #62054)

Sampler Type	Sampler S/N	% Error	Criteria Met
PQ200 PM2.5	1751	8.4% High	Yes
TSP Tisch	2362/3105	4.00% Low	Yes
Dustfall Jars	N/A	N/A	Yes

2. Galllinger Road (Station #62055)

Sampler Type	Sampler S/N	% Error	Criteria Met
PQ200 PM2.5	1752	1.2% Low	Yes
TSP Tisch	3291	0.25% Low	Yes
* Dustfall Jars*	N/A	N/A	Yes

If you have any questions, do not hesitate to call.
Yours truly,

Jim Stachowich
Senior Environmental Officer
Badge #1528
Air, Pesticides and Environmental Planning
Technical Support Section
Northern Region

c: Garnet Cornell Newgold Inc.
c: Jason Tittlemier Senior Environmental Officer, Kenora District Office, MOE
c: File AQ 06 13 Thunder Bay/NewGold Inc./62054/62055/2021/Qtr#2

Ontario
Ministry of the Environment

Non-Continuous Instrumentation
Dustfall
Site Audit

Dustfall Site Audit			
Site Name/Address: New Gold Tait Lake			
City/Town: Timmins Municipality			
Site ID #: 62054	Operator/Representative:		
Date (yr/mm/dd): 21/09/09	Auditor: Jim Stonehouse #152Y		
Criteria	**Requirements**	**Observed**	**Criteria Met?**
			YES / NO
Sampler height	3 m above ground		✓ / ○
Distance from Obstructions	270° arc of unrestricted airflow & wind from point source quadrant must be included in arc		✓ / ○
	No overhead obstructions (hydro telephone wires) to interfere with particle deposition		✓ / ○
Distance from trees	Should be > 20 m from drip line of trees		✓ / ○
Distance from road	No nearby unpaved roads & parking lot		✓ / ○
Rooftop installation	Avoid building wake effect		✓ / ○
	No nearby chimney or flues that could emit particles (soot/coal)		✓ / ○
Bracket installation	Should be level & jar must be level in bracket		✓ / ○
Ground cover	Should have vegetative cover		✓ / ○
Liner	4 mil liner must be used		○ / ✓
Comments/observations and overall audit opinion:			
No liners in dustfall jars. Jars are sealed + sent away for analysis			
Action Required (Auditor): Nothing		**Signature:**	
Action Taken (Auditee): Nothing		**Signature:**	

00186

Ontario Ministry of the Environment

Atmospheric Analyser Audit Particulate

Site Information

Date YYYY MM DD: 2021 09 09	Company: New Gold Tait Road		
Station/Site No.: 62054	Location Address: Chapleau Municipality Tait Road		
Calibrator make: TRICAL TC-5		Instrument serial #: 1751	Instrument make: PQ 200
Calibrator Serial No.: 64		Pollutant: PM 2.5	
Accuracy (GPS)		Zone	
Easting		Northing	
+/- 10% Objective/Citeria Met	☑ Yes ☐ No		
Audit performed by (Name and Signature)	Jim Stalteucht #1528		

Results

Calibration Orifice and Equation - Manometer

Calibration orifice number:	Manometer type:	Manometer S/N:
	S = slope of the calibration orifice	
	I = intercept of the calibration orifice	

Ambient Temperature 15.0 °C Ambient Pressure 727 mm Hg

Audit Results	Required flow	
Manometer reading (in.of water)	Hi-vol & PM	40 cfm
True flow calculated result: $\sqrt{MR \times S+1}$ 18.10 - 16.7	PAH	30 cfm
Percent error = (true flow value - required flow) x 100 / required flow 16.7 ↑ 8.4%	Dioxins	8 cfm
Leak Test	47 mm	16.7 L/M
Temperature Correction = SQRT [298/(273+/-Ta)]	Ta = AMBIENT TEMP °C	

Remarks

Kept Antsy on it Running High Passed

Signature (Witness)	Name	Title
	Sarah Flesher	Enviro tech

Has the instrument been restored to service? ☐ Yes ☐ No

COPY 1

1999 (12/07)

00187

Ontario Ministry of the Environment

Atmospheric Analyser Audit Particulate

Site Information

Date (YYYY MM DD): 2021 09 09	Company: New Gold Tait Road
Station/Site No.: 62054	Location Address: Chapleau Municipality
Calibrator make	Instrument serial #: 2562/3105
Instrument make: Tisch	Calibrator Serial No.
Pollutant: TSP	Accuracy (GPS)
Zone	Easting
Northing	+/- 10% Objective/Citeria Met ☑ Yes ☐ No
Audit performed by (Name and Signature): Jim Stallwell #1528	

Results

Calibration Orifice and Equation - Manometer

Calibration orifice number: 41	Manometer type: Air-Neotronics	Manometer S/N: 1200076

17.60	S = slope of the calibration orifice
0.25	I = intercept of the calibration orifice

Ambient Temperature 15.0°C Ambient Pressure 727 mm/Hg

Audit Results		Required flow	
Manometer reading (in.of water)	4.7	Hi-vol & PM	40 cfm
True flow calculated result: $\sqrt{MR \times S+1}$	38.4	PAH	30 cfm
Percent error = (true flow value - required flow) x 100 / required flow	38.4 - 40 / 40 ↓ 4.0%	Dioxins	8 cfm
Leak Test	ok	47 mm	16.7 L/M

Temperature Correction = SQRT [298/(273+/-Ta)] Ta = AMBIENT TEMP °C

Remarks

Nothing Required SS

Signature (Witness)	Name: Sarah Flesher	Title: Enviro tech

Has the instrument been restored to service? ☐ Yes ☐ No

COPY 1

1999 (12/07)

Ontario
Ministry of the Environment

Non-Continuous Instrumentation
Dustfall
Site Audit

Dustfall Site Audit			
Site Name/Address: New Gold Gillies Lake			
City/Town: Chapleau Municipality			
Site ID #: 62055	Operator/Representative:		
Date (yr/mm/dd): 21/09/09	Auditor: Jim Stockwell #1528		
Criteria	**Requirements**	**Observed**	**Criteria Met?**
			YES / NO
Sampler height	3 m above ground		✓ / ○
Distance from Obstructions	270° arc of unrestricted airflow & wind from point source quadrant must be included in arc		✓ / ○
	No overhead obstructions (hydro telephone wires) to interfere with particle deposition		✓ / ○
Distance from trees	Should be > 20 m from drip line of trees		✓ / ○
Distance from road	No nearby unpaved roads & parking lot		✓ / ○
Rooftop installation	Avoid building wake effect		✓ / ○
	No nearby chimney or flues that could emit particles (soot/coal)		○ / ○
Bracket installation	Should be level & jar must be level in bracket		○ / ○
Ground cover	Should have vegetative cover		○ / ✓ No Cover
Liner	4 mil liner must be used		○ / ✓ No Liner
Comments/observations and overall audit opinion:			
Dust Fall Jar Is Capped & Sent To Lab For Analysis			
Action Required (Auditor): Nothing Required		**Signature:**	
Action Taken (Auditee): None Required		**Signature:**	

Ontario Ministry of the Environment

Atmospheric Analyser Audit Particulate

Site Information

Date (YYYY MM DD) 2021 09 09	Company New Gold Gallinger Lions
Station/Site No. 62055	Location Address Chapleau Municipality Gallinger Lions
Calibrator make BGI Tri-Cal	Instrument serial # 1853 / Instrument make BGI-200
Calibrator Serial No. TC-5 S/N64	Pollutant PM2.5
Accuracy (GPS)	Zone
Easting	Northing
+/- 10% Objective/Citeria Met ☑ Yes ☐ No	
Audit performed by (Name and Signature) Jim Simmonds #1578	

Results

Calibration Orifice and Equation - Manometer

Calibration orifice number:	Manometer type:	Manometer S/N:
	S = slope of the calibration orifice	
	I = intercept of the calibration orifice	

Ambient Temperature 13.9°C Ambient Pressure 727 mmHg

Audit Results	Required flow	
Manometer reading (in.of water)	Hi-vol & PM	40 cfm
True flow calculated result: $\sqrt{MR \times S+1}$ 16.5 – 16.7	PAH	30 cfm
Percent error = (true flow value - required flow) x 100 / required flow ✓ 1.2%	Dioxins	8 cfm
Leak Test OK	47 mm	16.7 L/M
Temperature Correction = SQRT [298/(273+/-Ta)]	Ta = AMBIENT TEMP °C	

Remarks

Signature (Witness)	Name	Title
	Sarah Flesher	Enviro tech

Has the instrument been restored to service? ☐ Yes ☐ No

COPY 1

1999 (12/07)

00189

Ontario Ministry of the Environment

Atmospheric Analyser Audit Particulate

Site Information

Date 2021 YYYY 09 MM 09 DD	Company New Gold		
Station/Site No. 62055	Location Address Chapleau Municipality Gallinger Road		
Calibrator make		Instrument serial # 3791	Instrument make TE-5007 S/N 4035
Calibrator Serial No.		Pollutant TSP	
Accuracy (GPS)		Zone	
Easting		Northing	
+/- 10% Objective/Citeria Met	☑ Yes ☐ No		
Audit performed by (Name and Signature)			

Results

Calibration Orifice and Equation - Manometer		
Calibration orifice number: 21	Manometer type: Air-Neotronics	Manometer S/N: 1200076
17.60	S = slope of the calibration orifice	
0.25	I = intercept of the calibration orifice	

Ambient Temperature 13.0°C Ambient Pressure 727 mm Hg

Audit Results		Required flow	
Manometer reading (in.of water)	4.9	Hi-vol & PM	40 cfm
True flow calculated result: $\sqrt{MR \times S+1}$	39.9	PAH	30 cfm
Percent error = (true flow value - required flow) x 100 / required flow (39.9 - 40 / 40)	✓ 0.25%	Dioxins	8 cfm
Leak Test		47 mm	16.7 L/M

Temperature Correction = SQRT [298/(273+/-Ta)] Ta = AMBIENT TEMP °C

Remarks

Nothing Necessary.

Signature (Witness)	Name	Title
	Sarah Flesher	Enviro tech

Has the instrument been restored to service? ☐ Yes ☐ No

COPY 1

1999 (12/07)

Ontario
Ministry of the Environment

Meteorological Instrumentation
Wind Speed & Direction
Site Audit

Wind Speed & Direction Site Audit			
Site Name/Address: New Colo TAT Com			
City/Town: Chippewa Municipality			
Site ID #: 62056	Operator/Representative:		
Date (yr/mm/dd): 21/09/09	Auditor: Jim Stallwood		
Criteria	**Requirements**	**Observed**	**Criteria Met?**
			YES / NO
Sensor height	10 m above ground (standard for open level terrain)		✓ / ○
Sensor height (elevated releases)	Near stack top or 100 m whichever is lower/feasible		✓ / ○
Distance from Obstructions	>1H (building height) upwind of building obstruction		✓ / ○
	> 5-10H downwind of building		✓ / ○
Tower installation	>2 tower widths for boom install		✓ / ○
	>1 tower width above tower for tower mast installation		✓ / ○
Distance from trees	Same as for obstruction mentioned above		✓ / ○
	Should be >10 m above vegetated cover if no open exposure		✓ / ○
Rooftop installations	Not recommended; must be > 1.5H above building roof		✓ / ○
Comments/observations (also general station conditions and status of logbooks):			
Not Tower All Good			
Action Required (Auditor):		Signature:	
Action Taken (Auditee):		Signature:	

NEW GOLD INC.

RAINY RIVER MINE

AMBIENT AIR QUALITY MONITORING PROGRAM

FOURTH QUARTER 2021 REPORT

FEBUARY 2022

ACRONYMS AND ABBREVIATIONS

$\mu g/m^3$	Microgram per Cubic Metre
AAQC	Ambient Air Quality Criteria
AAQO	Alberta Ambient Air Quality Objectives
ACFM	Cubic Feet Per Minute at Actual Conditions
AEP	Alberta Environment and Parks
ASTM	American Society for Testing and Materials
BCMOE	British Columbia Ministry of the Environment
CAAQS	Canadian Ambient Air Quality Standards
CFM	Cubic Foot Per Minute
Hi-Vol	High Volume Sampler
ICP/AES	Inductively Coupled Plasma / Atomic Emission Spectroscopy
ICP/MS	Inductively Coupled Plasma / Mass Spectrometry
LPM	Litres Per Minute
MECP	Ministry of the Environment, Conservation and Parks
NIST	National Institute of Standards and Technology
NO_2	Nitrogen Dioxide
$PM_{2.5}$	Particulate Matter less than 2.5 microns (µm) in diameter
POI	Point of Impingement
SO_2	Sulphur Dioxide
TSP	Total Suspended Particulate
U.S. EPA	United States Environmental Protection Agency
UTM	Universal Transverse Mercator

TABLE OF CONTENTS

SECTION 1. INTRODUCTION 5

SECTION 2. MONITORING STATIONS 6

2.1 METEOROLOGICAL STATION 6

SECTION 3. ANALYTICAL METHODS 18

3.1 TOTAL SUSPENDED PARTICULATE MATTER (TSP) AND METALS 18
3.2 RESPIRABLE PARTICULATE MATTER ($PM_{2.5}$) 18
3.3 TOTAL DUSTFALL 19
3.4 PASSIVE SAMPLING FOR SO_2 AND NO_2 19

SECTION 4. MONITORING METHODS 21

4.1 HI-VOL AND PQ200 SAMPLERS 21
4.2 DUSTFALL SAMPLERS 21
4.3 PASSIVE SAMPLERS 21

SECTION 5. SAMPLING ISSUES 22

5.1 PERFORMANCE AND SITE AUDITS 22
5.2 EQUIPMENT AND SAMPLING ISSUES 22

SECTION 6. SAMPLING RESULTS 23

6.1 TSP AND METALS 23
6.2 $PM_{2.5}$ 26
6.3 TOTAL DUSTFALL 27
6.4 PASSIVE SO_2 AND NO_2 34

SECTION 7. MITIGATION MEASURES 37

SECTION 8. CONCLUSION 38

SECTION 9. REFERENCES 39

SECTION 10. CLOSING 41

LIST OF TABLES

TABLE 2-1. AMBIENT AIR MONITORING STATIONS 6
TABLE 4-1. SAMPLER CALIBRATION DATES 21
TABLE 5-1. Q2 INVALIDATED SAMPLES 22
TABLE 6-1. TSP SUMMARY STATISTICS 24
TABLE 6-2. MAXIMUM CONCENTRATIONS OF METALS 24
TABLE 6-3. $PM_{2.5}$ SUMMARY STATISTICS 26
TABLE 6-4. TOTAL DUSTFALL SUMMARY STATISTICS 28
TABLE 6-5: MAXIMUM MONTHLY CONCENTRATIONS FOR DUSTFALL METALS 29
TABLE 6-6: SPP1 DUSTFALL SAMPLES VERSUS STOCKPILE SIZE AND WEATHER DATA 33
TABLE 6-7: SUMMARY STATISTICS FOR SO_2 AND NO_2 35

LIST OF FIGURES

FIGURE 2-1. AMBIENT AIR MONITORING STATION LOCATIONS 7
FIGURE 2-2. LOCATION OF NON-POI AMBIENT MONITORING STATIONS 8
FIGURE 2-3. TAIT ROAD STATION SITING 9
FIGURE 2-4. GALLINGER ROAD STATION SITING 10
FIGURE 2-5. TAIT ROAD STATION DETAILED VIEW 11
FIGURE 2-6. NORTHWEST STATION SITING 12
FIGURE 2-7. SPP1 STATION SITING 13
FIGURE 2-8. NOP1 STATION SITING 14
FIGURE 2-9. CP1 STATION SITING 15
FIGURE 2-10. GH1 STATION SITING 16
FIGURE 2-11. CP1 STATION SITING 17
FIGURE 6-1. TSP SAMPLING RESULTS 25
FIGURE 6-2. MAX METAL SAMPLING RESULT AS A FRACTION OF METAL AAQC 25
FIGURE 6-3. $PM_{2.5}$ SAMPLING RESULTS 27
FIGURE 6-4. TOTAL DUSTFALL SAMPLING RESULTS AT POI STATIONS 30
FIGURE 6-5. FIXED DUSTFALL SAMPLING RESULTS AT POI STATIONS 30
FIGURE 6-6. PERCENT OF FIXED DUSTFALL IN TOTAL DUSTFALL 31
FIGURE 6-7. FIXED DUSTFALL FRACTION VS. TOTAL DUSTFALL CONCENTRATION 31
FIGURE 6-8. DUSTFALL SAMPLING RESULTS AT NON-POI STATIONS 32
FIGURE 6-9.FIXED DUSTFALL FRACTION VS. TOTAL DUSTFALL CONCENTRATION 32
FIGURE 6-10. DUSTFALL SAMPLING RESULTS AT SPP1 STATION 33
FIGURE 6-11. SPP1 DUSTFALL CONCENTRATIONS VS. STOCKPILE SIZE AND WEATHER DATA 34
FIGURE 6-12. SO_2 MONITORING RESULTS 36
FIGURE 6-13. NO_2 MONITORING RESULTS 36

LIST OF APPENDICES

APPENDIX A: SAMPLING RESULTS ..... **A**

APPENDIX A-1: TSP, METALS, AND $PM_{2.5}$ SAMPLING RESULTS ..... B
APPENDIX A-2: TOTAL DUSTFALL SAMPLING RESULTS ..... F
APPENDIX A-3: DUSTFALL METALS SAMPLING RESULTS L
APPENDIX A-4: SO_2 AND NO_2 PASSIVE SAMPLING RESULTS ..... P

APPENDIX B: NOTICE OF EXCEEDANCES FOR Q3 2021 ..... **R**

APPENDIX C: LABORATORY RESULTS ..... **S**

APPENDIX D: HI-VOL & PQ200 SAMPLER CALIBRATION SHEETS ..... **T**

APPENDIX E: SAMPLE EDIT LOGS ..... **U**

APPENDIX E-1: TOTAL SUSPENDED PARTICULATE SAMPLE EDIT LOG V
APPENDIX E-2: RESPIRABLE PARTICULATE MATTER SAMPLE EDIT LOG X
APPENDIX E-3: DUSTFALL SAMPLE EDIT LOG ..... Y

APPENDIX F: MECP AUDIT ..... **Z**

Section 1. INTRODUCTION

The following is a summary of the Fourth Quarter 2021 Report results of the Ambient Air Quality Monitoring Program undertaken at New Gold Inc.'s Rainy River Mine located north-west of Emo, Ontario.

In this quarter, New Gold Inc. (New Gold) staff operated and maintained the ambient air quality monitoring sampling stations; communicated with laboratory staff, as required; prepared data summary reports; and performed equipment calibrations at the various monitoring stations, as necessary.

This Quarterly Ambient Air Quality Report addresses the required elements of a Quarterly Report, as defined in the "Operations Manual for Air Quality Monitoring in Ontario" (Ontario Ministry of the Environment, Conservation and Parks, 2019), hereafter referred to as the Operations Manual. The following information is provided:

- Sampling Details
- Contaminant Summary Statistics
    - Number of Valid Samples and Percent Valid Data
    - Arithmetic and Geometric Means
    - Max Sampling Results
- Summary of Exceedances of All Applicable Limits (incl. Ontario AAQCs and CAAQS)

The purpose of the Ambient Air Quality Monitoring Program is to quantify the potential air quality effects associated with mining activities. The Program is conducted in accordance with the Site's Amended Environmental Compliance Approval (ECA) No. 0412-A2LR4V, issued on September 24, 2015, and the MECP Program Approval Letter, dated November 9, 2016.

The Program consists of two (2) sampling stations established in May 2015:

- South-west of the Site near McMillan Road along the realigned Highway 600 (Tait Road Station); and
- North-east of the Site along Gallinger Road (Gallinger Road Station).

These sampling stations consist of:

- One (1) High Volume (Hi-Vol) Sampler for discrete sampling of total suspended particulate (TSP) and metals;
- One (1) PQ200 Sampler for discrete sampling of respirable particulate matter ($PM_{2.5}$);
- One (1) passive dustfall collection unit for sampling dustfall; and
- One (1) passive sampling enclosure for sampling nitrogen dioxide (NO_2) and sulphur dioxide (SO_2).

Section 2. MONITORING STATIONS

The ambient air quality monitoring stations were sited in accordance with the criteria stipulated in the Operations Manual (2019).

Universal Transverse Mercator (UTM) co-ordinates for each station based on the NAD83 co-ordinate system are presented in **Table 2-1**. The stations are shown in **Figure 2-1** through **Figure 2-7** below.

Table 2-1. Ambient Air Monitoring Stations

Station	UTM Co-ordinates			Parameters Monitored
	Easting (m)	Northing (m)	Zone	
Tait Road (Southwest Station)	426 072	5 406 996	15	TSP, Metals, $PM_{2.5}$, Dustfall, NO_2, SO_2
Gallinger Road (Northeast Station)	431 133	5 410 534	15	TSP, Metals, $PM_{2.5}$, Dustfall, NO_2, SO_2
Northwest Station (TMA)	419 797	5 413 042	15	TSP, Metals, $PM_{2.5}$, Dustfall
SPP1 Station (Stockpile Pond)	426 937	5 410 799	15	Dustfall
NOP1 Station (South Runoff Pond)	426 297	5 410 537	15	Dustfall
WCP1 Station (West Creek Pond)	425 616	5 411 230	15	Dustfall
GH1 Station (Sedimentation Pond)	423 939	5 411 468	15	Dustfall
CP1 Station (Clark Pond)	429 514	5 409 427	15	Dustfall

2.1 METEOROLOGICAL STATION

Barron Site, located near Heatwole Road, contains a meteorological station that provides real-time wind speed, wind direction, temperature, relative humidity, precipitation, and solar radiation data. All measurements taken at this Site are taken at a height of ten (10) metres above grade.

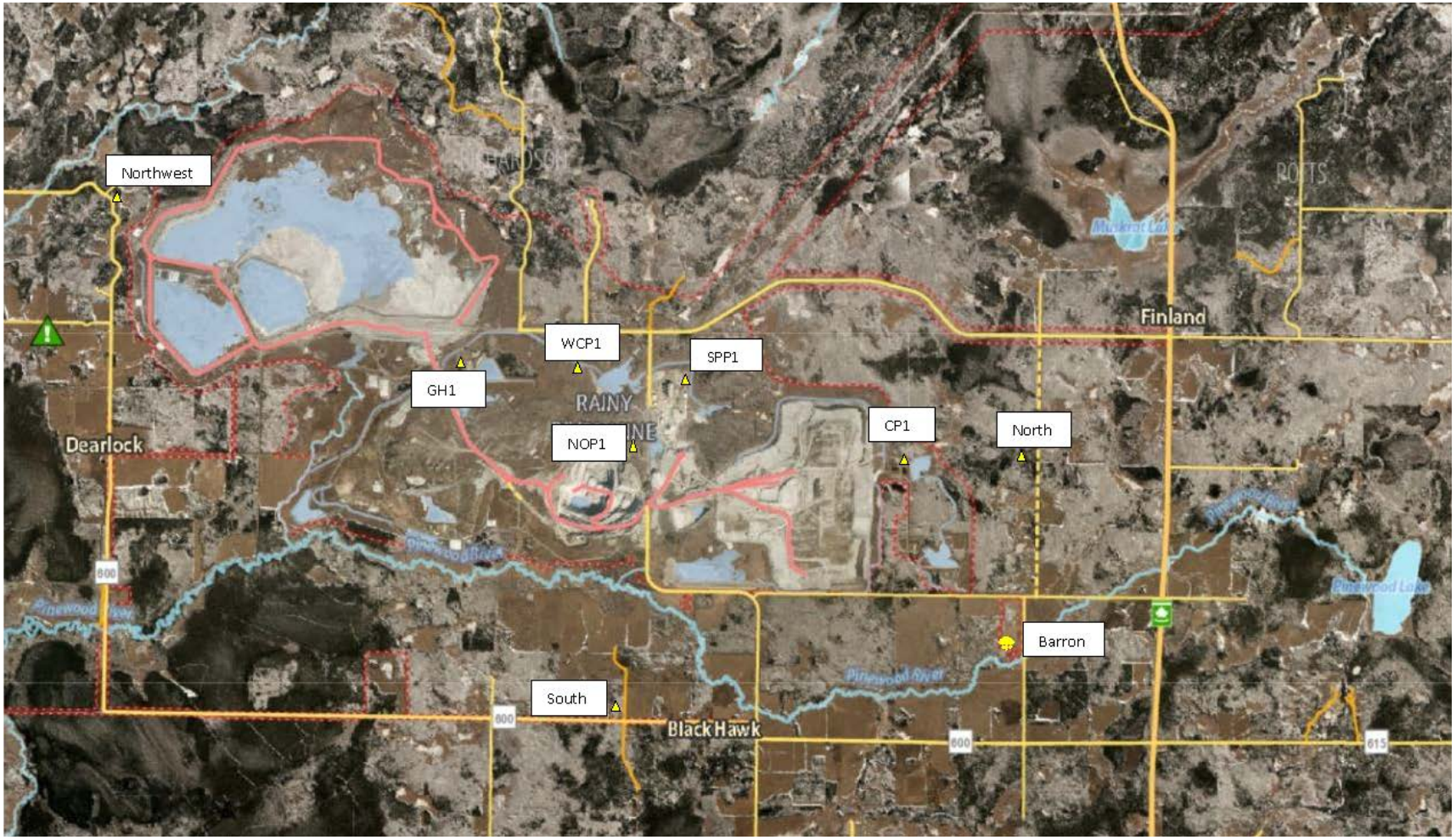

Figure 2-1. Ambient Air Monitoring Station Locations

Figure 2-2. Location of Non-POI Ambient Monitoring Stations

Figure 2-3. Tait Road Station Siting

Figure 2-4. Gallinger Road Station Siting

Figure 2-5. Tait Road Station Detailed View

Figure 2-6. Northwest Station Siting

Figure 2-7. SPP1 Station Siting

Figure 2-8. NOP1 Station Siting

Figure 2-9. WCP1 Station Siting

Figure 2-10. GH1 Station Siting

Figure 2-11. CP1 Station Siting

Section 3. Analytical Methods

3.1 Total Suspended Particulate Matter (TSP) and Metals

24-hour average TSP and metal samples were collected as specified in the Operations Manual. Samples were collected every sixth (6th) day, as per the U.S. EPA Sampling Schedule (United States Environmental Protection Agency, 2020).

TSP and metal samples were collected using High Volume (Hi-Vol) Samplers with a brush motor and controlled mass flow. The samples are collected on an 8-inch by 10-inch Hi-Vol quartz filter.

TSP concentrations are determined using the standard gravimetric reference method described in Compendium Method IO-3.1 of the U.S. EPA's "Compendium of Methods for the Determination of Inorganic Compounds in Ambient Air" (1999).

The lowest detectable mass of TSP on the filter is 2,300 micrograms (µg). A valid 24-hour sample volume for the Hi-Vol Sampler ranges between 1,468 and 1,794 cubic metres (m^3). As such, the method detection limit (MDL) for TSP ranges between 1.28 and 1.57 micrograms per cubic metre ($\mu g/m^3$).

Metal concentrations are determined using Inductively Coupled Plasma Atomic Emission Spectroscopy (ICP/AES) based on Compendium Method IO-3.5 (U.S. EPA, 1999). The metals and metalloids (elements with both metallic and non-metallic properties) analyzed include arsenic (As), cadmium (Cd), chromium (Cr), cobalt (Co), copper (Cu), iron (Fe), lead (Pb), manganese (Mn), nickel (Ni), selenium (Se), vanadium (V), and zinc (Zn).

The total volume of each sample is calculated using methods recommended by the sampler manufacturer. These calculations account for ambient temperature and pressure, sampler flow rate, and individual monitor specifications. The calculations are not corrected for humidity.

3.2 Respirable Particulate Matter ($PM_{2.5}$)

Respirable particulate samples are collected at the same time as TSP samples (every sixth day, as per the EPA Sampling Schedule).

Samples are collected using PQ200 Samplers over a 24-hour period to align with the averaging time for the Canadian Ambient Air Quality Standard (CAAQS). The samples are collected on a 47-millimetre (mm) diameter polytetrafluoroethylene (PTFE; Teflon) filter.

$PM_{2.5}$ concentrations are determined using the standard gravimetric reference method outlined in the U.S. EPA's "Quality Assurance Guidance Document 2.12: Monitoring $PM_{2.5}$ in Ambient Air Using Designated Reference or Class I Equivalent Methods" (U.S. EPA, 2016).

The lowest detectable mass of $PM_{2.5}$ on the Teflon filter is 15 micrograms (µg). Based on a valid 24-hour sample volume ranging between 21.6 and 26.4 m^3, the MDL for $PM_{2.5}$ ranges between 0.9 and 16.7 $\mu g/m^3$.

Total sample volume is recorded mechanically by the PQ200 Samplers.

3.3 TOTAL DUSTFALL

Total dustfall deposition samples are collected over a 30-day period using standard plastic dustfall sampler jars with four (4) millimetre (mm) polyethylene liners. The dustfall jars are treated with an algaecide to prevent algal growth during the summer and alcohol to prevent freezing during the winter.

The sample jars measure roughly 15.4-centimetres (cm) in diameter by 30.5 cm in height.

The water soluble and insoluble portions of dustfall are determined by gravimetric analysis using the method described in Section G of British Columbia Ministry of the Environment's "Air Constituents – Inorganic" (British Columbia Ministry of the Environment, 2020).

Metal concentrations within the dustfall samples are determined using Inductively Coupled Plasma-Mass Spectrometry (ICP/MS) in accordance with U.S. EPA's Method 6020A (SW-846) (U.S. EPA, 1998). The metals and metalloids sampled include aluminum (Al), antimony (Sb), arsenic (As), barium (Ba), beryllium (Be), bismuth (Bi), boron (B), cadmium (Cd), calcium (Ca), chromium (Cr), cobalt (Co), copper (Cu), iron (Fe), lead (Pb), lithium (Li), magnesium (Mg), manganese (Mn), molybdenum (Mo), nickel (Ni), phosphorus (P), potassium (K), selenium (Se), silicon (Si), silver (Ag), sodium (Na), strontium (Sr), thallium (Tl), tin (Sn), titanium (Ti), uranium (U), vanadium (V), and zinc (Z).

The analysis method employed for total dustfall has an MDL of 0.3 grams per square metre per 30 days (g/m^2/30 days).

3.4 PASSIVE SAMPLING FOR SO_2 AND NO_2

Sulphur dioxide (SO_2) and nitrogen dioxide (NO_2) concentrations are monitored by passive monitoring devices over a 30-day exposure period. As such, sample uptake depends on temperature, relative humidity, and wind speed. To account for this, analytical results are adjusted based on the monthly averages for these meteorological parameters throughout the exposure period. The required meteorological data are obtained by Maxxam Analytics from the Environment and Climate Change Canada website for the Fort Frances meteorological station (Climate ID 6022474) with each sample submission.

Since there is currently no MECP guidance on 30-day passive sampling of NO_2 or SO_2, sampling is performed using the methodology developed, approved, and validated by Alberta Environment with the support of the Alberta Research Council, the Clean Air Strategic Alliance of Alberta, and the National Research Council of Canada (Bari, Curran, & Kindzierski, 2015).

For both SO_2 and NO_2, the analytical MDL is on the order of 0.1 parts per billion by volume (ppbv). Validation tests conducted in Alberta show that results from passive sampling are typically within ten percent (10%) of those obtained from sampling with continuous analyzers for 30-day exposure periods (2015).

Since there are no MECP guidelines for monthly concentrations of SO_2 or NO_2 obtained from passive sampling, this data is used solely for screening purposes.

For NO_2, the monthly results are compared against Ontario's 24-hour AAQC (200 $\mu g/m^3$) converted to an equivalent 30-day (720-hour) average (78 $\mu g/m^3$) using the methodology outlined

in the MECP's "Guideline A-10: Procedure for Preparing an Emission Summary and Dispersion Modelling Report" (Ontario Ministry of the Environment, Conservation and Parks, 2019).

For SO_2, the monthly results are compared against Alberta's 30-day Ambient Air Quality Objective (AAQO) of 30 µg/m^3 (Alberta Environment and Parks, 2019).

Section 4. Monitoring Methods

4.1 Hi-Vol and PQ200 Samplers

Stations are visited every six days to take samples for TSP, metals, and $PM_{2.5}$. The exposed filter is recovered, and a pre-weighed filter is installed for the subsequent sample run.

Additional visits are made to the stations, as required, to resolve instrumentation issues, perform flow calibration checks, and preventative/proactive maintenance. All calibrations are performed in accordance with manufacturer specifications.

Flow calibrations are performed at least once per quarter by New Gold staff on the Hi-Vol TE-5170 Samplers using a Tisch Delta Calibration kit. The flow is calibrated to a flow rate of 1,133 litres per minute (LPM), which produces a sample volume of 1,632 m^3 in a 24-hour period.

Flow, temperature, and pressure calibrations are performed at least once per quarter by New Gold staff on the PQ200 Samplers using an electronic BGI Flow Calibrator. The flow is calibrated to a flow rate of 16.7 LPM, which produces a sample volume of 24 m^3 in a 24-hour period.

Table 4-1 below outlines the dates on which calibrations were performed on the Hi-Vol and PQ200 Samplers in this quarter. Calibration sheets for the samplers can be found in **Appendix D**.

Table 4-1. Sampler Calibration Dates

Station	Hi-Vol Sampler Calibration Date	PQ200 Sampler Calibration Date
Tait Road (Southwest Station)	October 10th, 2021	October 10th, 2021
Gallinger Road (Northeast Station)	October 22nd, 2021	October 22nd, 2021
Northwest Station (TMA)	October 22nd, 2021	October 22nd, 2021

4.2 Dustfall Samplers

The dustfall samplers containing algaecide are changed monthly to correspond with the 30-day exposure period.

Dustfall jars are provided by the laboratory with screw-on lids to prevent sample loss during transport.

4.3 Passive Samplers

The permeation filters in the passive samplers are also changed monthly to correspond with the 30-day exposure period.

Filters are kept in cassettes inside Ziploc bags until deployment to prevent premature exposure. After the sample is collected, the filter is placed back into the cassette and back into the Ziploc bag for shipment to the lab.

Section 5. Sampling Issues

5.1 Performance and Site Audits

There were no MECP audits in Q4. There was one (1) MECP audit conducted in Q3 on September 9, 2021. There were no follow-up actions required.

5.2 Equipment and Sampling Issues

There were six (6) samples invalidated in this quarter, as described in the table below and in **Appendix E**.

Table 5-1. Q2 Invalidated Samples

Sample Date	Station	Contaminant	Reasoning
October 1st, 2021	Tait Road	TSP	Sample volume of 1,438 m^3 was below the lower volume limit of 1,468 m^3.
October 7th, 2021	Tait Road	TSP	Sample volume of 1,446 m^3 was below the lower volume limit of 1,468 m^3.
October 13th,, 2021	Northwest Station	TSP	Sample volume of 1,425 m^3 was below the lower volume limit of 1,468 m^3.
October 19th,, 2021	Tait Road	TSP	Sample volume of 1,456 m^3 was below the lower volume limit of 1,468 m^3.
October 25th, 2021	Tait Road	TSP	Sample volume of 1,243 m^3 was below the lower volume limit of 1,468 m^3.
November 6th , 2021	Tait Road	TSP	Sample was not taken due to power outage at facility.

The PQ200 Sampler for $PM_{2.5}$ at the Northwest Station was offline for repairs from October 1st to November 18th and as such these samples were not obtained.

Section 6. Sampling Results

Sampling results for Q4 are presented in **Section 6.1** and **Appendix A-1** for TSP and metals, **Section 6.2** and **Appendix A-1** for $PM_{2.5}$, **Section 6.3** and **Appendices A-2** and **A-3** for total dustfall, and **Section 6.4** and **Appendix A-4** for passive SO_2 and NO_2.

In performing statistical analyses, as per the Operations Manual, a value of half the method detection limit is substituted for concentrations that are reported below the method detection limit. Laboratory Certificates of Analysis for all samples collected in Q4 are provided in **Appendix C**.

For comparative purposes, the Ontario AAQC and Canadian AAQS values are presented, where available. It is important to note that the Ontario AAQCs are equivalent to the standards prescribed by *Ontario Regulation 419/05: Air Pollution – Local Air Quality* (Government of Ontario, 2019).

Q4 presented fifteen (15) possible sampling days between October 1, 2021 and December 30, 2021 for the 6-day sampling schedule. Summaries of the analyses for TSP, metals, and $PM_{2.5}$ are presented in **Table 6-1, Table 6-2,** and **Table 6-3**, respectively.

Summaries of the analyses for total dustfall (incl. metals) and passive SO_2 and NO_2 are presented in **Table 6-4**, **Table 6-5**, **Table 6-6**, and **Table 6-7**.

6.1 TSP and Metals

In this quarter, the Gallinger Road Station collected sixteen (16) valid samples (100% valid data). The Northwest Station collected fifteen (15) valid samples (94% valid data), while the Tait Road Station collected ten (10) valid samples (63% valid). Since the Tait Road Station is below the 90% valid data threshold, statistical analyses for TSP and metals for Tait Road are computed using all data, including invalid samples. For the other stations (i.e., Gallinger Road and Northwest), statistical analyses are performed using valid data only.

For this quarter, the arithmetic mean TSP concentration was 14.96 µg/m^3 at the Tait Road Station, 23.58 µg/m^3 at the Gallinger Road Station, and 16.73 µg/m^3 at the Northwest Station. Geometric means for the three stations were 9.04 µg/m^3, 13.76 µg/m^3, and 10.72 µg/m^3, respectively.

The maximum 24-hour concentration for TSP was 65.83 µg/m^3 at the Tait Road Station on November 24th, 92.83 µg/m^3 at the Gallinger Road Station on October 31st and 94.09 µg/m^3 at the Northwest Station on October 25th.

Laboratory data are provided as the mass of contaminant on the filter, in micrograms. This is divided by the total sample volume measured by the Hi-Vol Sampler to determine the concentration of the contaminant in the sample using the following equation:

$$Concentration\ (\mu g/m^3) = \frac{Laboratory\ Measured\ Mass\ (\mu g)}{Sample\ Volume\ (m^3)}$$

In this quarter, there were no samples that exceeded the TSP AAQC (120 µg/m^3).

Data is summarized for TSP and metals in **Table 6-1** and **Table 6-2**. Sample data from all runs and further statistical analyses are presented in **Appendix A-1**, **Figure 6-1**, and **Figure 6-2.**

Table 6-1. TSP Summary Statistics. Concentrations presented in µg/m³.

	Tait Road Station	Gallinger Road Station	Northwest Station
Number of Valid Samples	10	16	15
% Valid Data	0.63	1	0.95
Arithmetic Mean	14.96	23.58	16.73
Geometric Mean	9.04	13.76	10.72
24-Hour Maximum	65.83	92.83	94.09
24-Hour Minimum	1.62	1.54	16.73
October Maximum	42.76	92.83	94.09
November Maximum	65.83	92.83	20.23
December Maximum	13.70	66.66	15.52
90th Percentile	39.23	57.42	25.34
95th Percentile	49.68	73.20	46.36
TSP AAQC	0	0	0
Samples > TSP AAQC	0	0	0
Samples > Metal AAQC	0	0	0

Table 6-2. Maximum Concentrations of Metals. Concentrations presented in µg/m³.

Metal	24-Hour AAQC	Tait Road Station		Gallinger Road Station		Northwest Station	
		Maximum Concentration	Fraction of AAQC	Maximum Concentration	Fraction of AAQC	Maximum Concentration	Fraction of AAQC
As	0.3	1.21E-03	0.40%	1.00E-03	0.33%	1.05E-03	0.35%
Cd	0.025	8.05E-04	3.22%	6.70E-04	2.68%	7.01E-04	2.81%
Cr	0.5	4.00E-03	0.80%	5.34E-03	1.07%	1.75E-03	0.35%
Co	0.1	8.05E-04	0.80%	6.70E-04	0.67%	7.01E-04	0.70%
Cu	50	9.27E-02	0.19%	1.39E-01	0.28%	2.80E-01	0.56%
Fe	4	1.38E+00	34.38%	2.36E+00	59.04%	1.66E+00	41.51%
Pb	0.5	8.97E-03	1.79%	5.68E-03	1.14%	3.53E-03	0.71%
Mn	0.4	5.16E-02	12.90%	6.48E-02	16.21%	4.76E-02	11.91%
Ni	0.2	2.16E-03	1.08%	3.20E-03	1.60%	1.05E-03	0.53%
Se	10	4.02E-03	0.04%	3.35E-03	0.03%	3.51E-03	0.04%
V	2	2.01E-03	0.10%	4.07E-03	0.20%	3.64E-03	0.18%
Zn	120	4.24E-02	0.04%	3.78E-02	0.03%	2.55E-02	0.02%

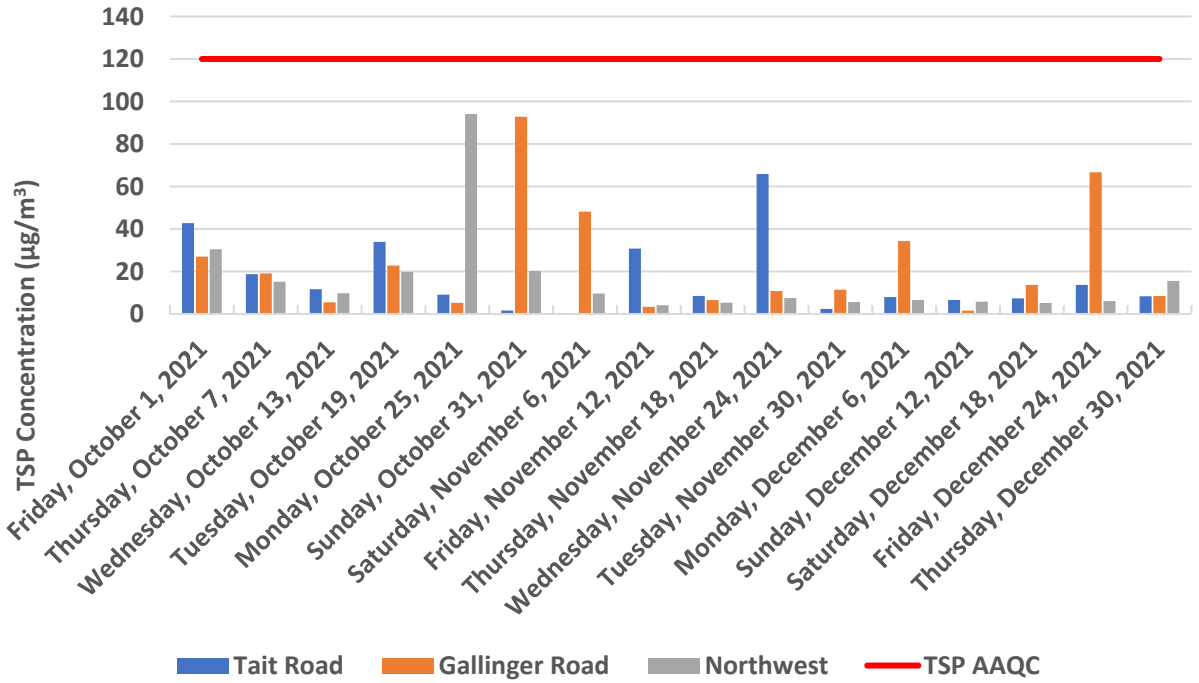

Figure 6-1. TSP Sampling Results

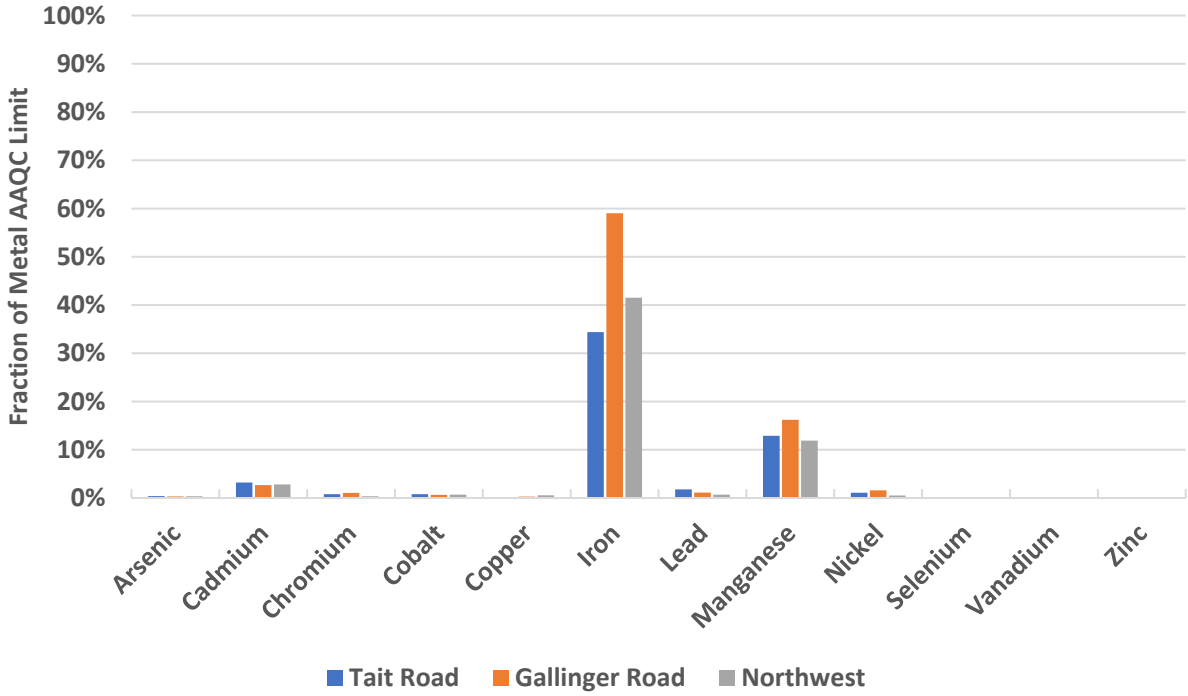

Figure 6-2. Max Metal Sampling Result as a Fraction of Metal AAQC

6.2 $PM_{2.5}$

In this quarter, the Tait Road Station and the Gallinger Road Station collected sixteen (16) valid samples (100% valid data), while the Northwest Stations collected seven (7) valid samples, which represents 100% valid data. The Northwest PQ200 was sent for repairs at the end of September and went back in service by Mid-November, as such this resulted in loss data. Statistical analyses for respirable particulate matter for all stations were computed using valid data since they are all above the 90% valid data threshold.

For this quarter, the arithmetic mean $PM_{2.5}$ concentrations were 4.84 µg/m^3, 5.04 µg/m^3, and 8.14 µg/m^3 for the Tait Road, Gallinger Road, and Northwest Stations, respectively.

The maximum 24-hour concentrations for $PM_{2.5}$ were 15.33 µg/m^3 at the Tait Road Station on October 1st, 12.87 µg/m^3 at the Gallinger Road Station on October 1st, and 16.17 µg/m^3 at the Northwest Station on December 24th.

Laboratory data is provided as the mass of $PM_{2.5}$ on the filter, in micrograms. This value is divided by the total sample volume measured by the PQ200 Sampler to determine the concentration of $PM_{2.5}$ in the sample using the following equation:

$$Concentration\ (\mu g/m^3) = \frac{Laboratory\ Measured\ Mass\ (\mu g)}{Sample\ Volume\ (m^3)}$$

In this quarter, there were no samples that exceeded the $PM_{2.5}$ AAQC or CAAQS (27 µg/m^3).

Data is summarized for $PM_{2.5}$ in **Table 6-3**. Sample data from all runs and further statistical analyses are presented in **Appendix A-1** and **Figure 6-3**.

Table 6-3. $PM_{2.5}$ Summary Statistics. Concentrations presented in µg/m^3.

	Tait Road Station	Gallinger Road Station	Northwest Station
Number of Valid Samples	16	16	7
% Valid Data	100%	100%	100%
Arithmetic Mean	4.84	5.04	8.14
Geometric Mean	3.59	3.49	6.77
24-Hour Maximum	15.33	12.87	16.17
24-Hour Minimum	0.90	0.90	2.22
July Maximum	15.33	12.87	N/A
August Maximum	7.54	7.90	12.04
September Maximum	8.62	11.80	16.17
90th Percentile	8.08	11.38	13.69
95th Percentile	10.30	12.07	14.93

	Tait Road Station	Gallinger Road Station	Northwest Station
$PM_{2.5}$ AAQC	27	27	27
Samples > $PM_{2.5}$ AAQC	0	0	0
MDL (µg)	15	15	15
Samples < MDL	0	0	0

Figure 6-3. $PM_{2.5}$ Sampling Results

6.3 TOTAL DUSTFALL

New Gold operates seven (7) ambient monitoring stations that measure 30-day dustfall levels: Tait Road, Gallinger Road, Northwest, SPP1, NOP1, WCP1, GH1, and CP1. Of these stations, only the Tait Road, Gallinger Road, and Northwest Stations are considered POI receptors, so measurements at the other stations are used solely for monitoring changes in dustfall over time and are not compared against the AAQC limit for the purpose of determining exceedances of the limit.

In this quarter, the Tait Road, Gallinger Road, and the Northwest stations collected three (3) valid samples (100% valid data). NOP1, CP1, WCP1, and GH1 Stations collected three (3) valid samples (100% valid data). Sampling at the SPP1 Station occurs on a weekly basis, and there were twelve (12) valid samples collected (100% valid data).

Laboratory data is provided as the mass of dustfall on the filter per square decimeter per day, in milligrams per decimeter square per day. This value is then converted to the appropriate units for reporting using the equation seen below:

$$Concentration\left(\frac{g}{m^2 \cdot 30\ days}\right) = Lab\ Concentration\left(\frac{mg}{dm^2 \cdot day}\right) \times \frac{1\ g}{1000\ mg} \times \frac{100\ dm^2}{1\ m^2} \times \frac{30\ days}{30\ days}$$

During the laboratory analysis, total dustfall is speciated into soluble and insoluble portions, as well as fixed and volatile portions. The fixed portion of total dustfall is the portion of the total dustfall that remains after the sample is ignited at 550°C. The mass of the sample lost during ignition represents the volatile portion. In the summer months (i.e., Q2 and Q3), the volatile portion of the dustfall is largely made up of large, organic particles (e.g., leaves, twigs, bugs, etc.) that are deposited and retained in the sample. As a result, the total dustfall may overestimate the actual dustfall mass in the sample. For this reason, the analysis of dustfall shows both fixed dustfall and total dustfall. The total dustfall versus fixed dustfall masses are compared in **Figure 6-5** and **Figure 6-6**.

In this quarter, there were no samples that exceeded the total dustfall 30-day Ontario AAQC (7 g/m^2/30 days).

Data is summarized for total dustfall in **Table 6-4**. Sample data from all runs and further statistical analyses are presented in **Appendix A-2**. Data is presented in **Table 6-5** and **Appendix A-3** for the metal concentrations measured in the dustfall at stations where metal samples are not taken by the Hi-Vol Sampler (i.e., SPP1, NOP1, WCP1, GH1, and CP1). **Table 6-6** compares the SPP1 dustfall concentrations against the stockpile elevation and weather conditions.

Table 6-4. Total Dustfall Summary Statistics. Concentrations presented in g/m^2/30 days.

	Tait Road Station	Gallinger Road Station	Northwest Station	SPP1 Station	NOP1 Station	WCP1 Station	GH1 Station	CP1 Station
Number of Valid Samples	3	3	3	12	3	3	3	3
% Valid Data	100%	100%	100%	100%	100%	100%	100%	100%
Arithmetic Mean	1.12	0.98	0.85	24.3	7.29	2.25	1.62	1.76
Monthly Maximum	1.2	0.99	1.05	198.6	9.15	3.4	1.32	2.76
Dustfall AAQC	7	7	7	7	7	7	7	7
Samples > Dustfall AAQC	0	0	0	5	2	0	0	2
Samples < MDL	0	0	0	0	0	0	0	0

Table 6-5: Maximum Monthly Concentrations for Dustfall Metals. Concentrations presented in g/m²/30 days.

Metal	SPP1 Station	NOP1 Station	WCP1 Station	GH1 Station	CP1 Station
Aluminum	2.33E+00	1.37E-01	6.27E-02	3.75E-02	4.74E-02
Antimony	7.17E-05	1.44E-05	7.50E-06	1.14E-05	1.38E-05
Arsenic	2.29E-03	1.50E-04	1.25E-04	1.22E-04	1.01E-04
Barium	1.73E-02	6.09E-04	7.26E-04	1.77E-04	2.25E-04
Beryllium	2.31E-04	4.80E-05	3.90E-05	5.70E-05	6.90E-05
Bismuth	2.31E-04	4.80E-05	6.27E-05	5.70E-05	6.90E-05
Boron	4.50E-03	9.60E-04	1.83E-03	1.14E-03	1.38E-03
Cadmium	2.25E-04	1.23E-05	4.26E-05	5.70E-06	6.90E-06
Calcium	6.48E+00	2.04E-01	4.86E-01	5.04E-02	6.75E-02
Chromium	3.93E-03	1.59E-04	8.70E-05	5.70E-05	6.90E-05
Cobalt	1.03E-03	2.97E-05	3.18E-05	1.14E-05	1.38E-05
Copper	6.99E-03	9.66E-04	3.84E-03	2.70E-04	4.71E-04
Iron	2.42E+00	9.96E-02	5.22E-02	3.36E-02	3.69E-02
Lead	4.02E-03	1.91E-04	1.28E-04	6.81E-05	7.68E-05
Lithium	2.79E-03	4.80E-04	3.90E-04	5.70E-04	6.90E-04
Magnesium	2.57E+00	5.64E-02	2.29E-01	1.79E-02	2.08E-02
Manganese	5.43E-02	4.35E-03	4.80E-03	1.01E-03	1.28E-03
Molybdenum	1.95E-04	1.66E-05	9.75E-05	5.70E-06	6.90E-06
Nickel	3.72E-03	2.07E-04	4.08E-04	5.70E-05	6.90E-05
Phosphorus	7.20E-02	4.80E-03	1.12E+00	5.70E-03	6.90E-03
Potassium	6.15E-01	2.85E-02	2.13E+00	1.08E-02	1.10E-02
Selenium	4.50E-04	9.60E-05	8.40E-05	1.14E-04	1.38E-04
Silicon	4.53E+00	1.89E-01	8.22E-02	5.31E-02	6.54E-02
Silver	3.45E-04	1.51E-05	1.25E-05	1.38E-06	2.67E-06
Sodium	1.43E-01	1.53E-02	2.18E-01	6.72E-03	7.59E-03
Strontium	8.70E-03	5.79E-04	8.46E-04	1.51E-04	1.97E-04
Thallium	4.50E-05	9.60E-06	7.50E-06	1.14E-05	1.38E-05
Tin	7.32E-05	9.90E-06	7.50E-06	1.14E-05	1.38E-05
Titanium	5.79E-02	1.98E-03	9.00E-04	1.14E-03	1.38E-03
Uranium	2.07E-04	1.80E-06	4.05E-06	1.14E-06	1.38E-06
Vanadium	6.84E-03	1.47E-04	9.30E-05	1.14E-04	1.38E-04
Zinc	5.10E-02	2.97E-03	1.64E-02	8.31E-04	1.02E-03

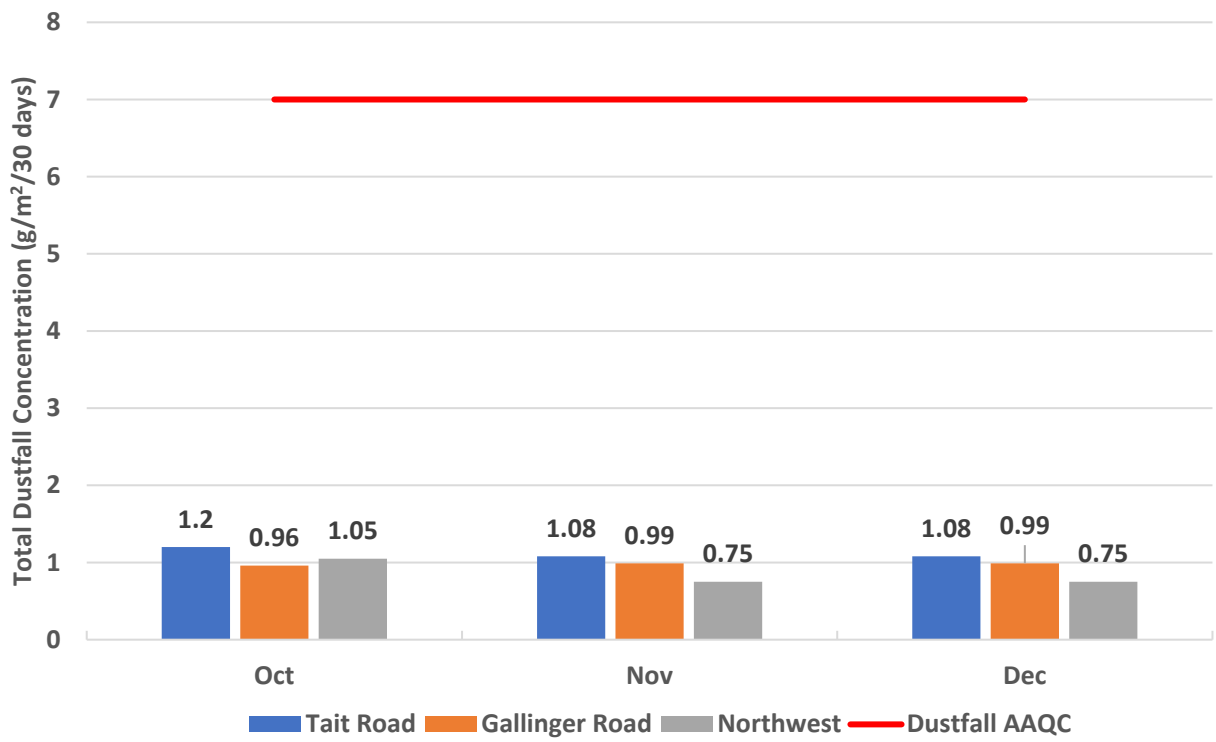

Figure 6-4. Total Dustfall Sampling Results at POI Stations

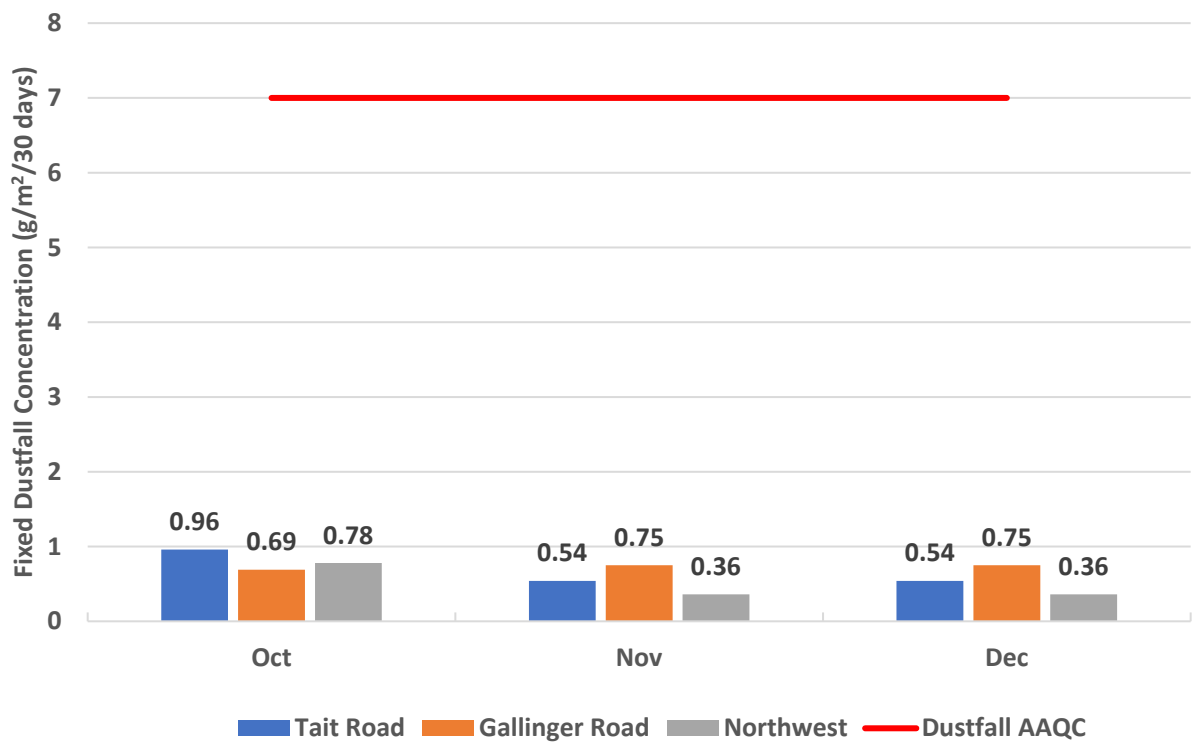

Figure 6-5. Fixed Dustfall Sampling Results at POI Stations

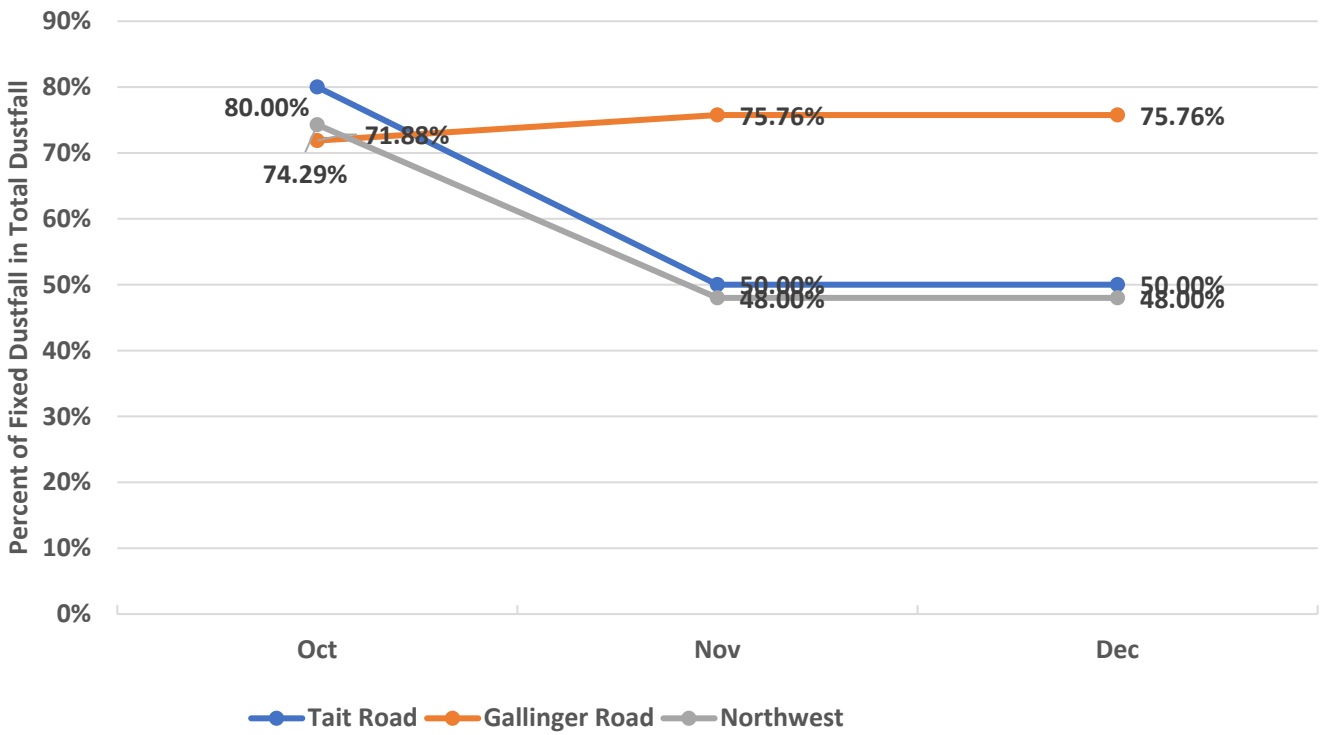

Figure 6-6. Percent of Fixed Dustfall in Total Dustfall

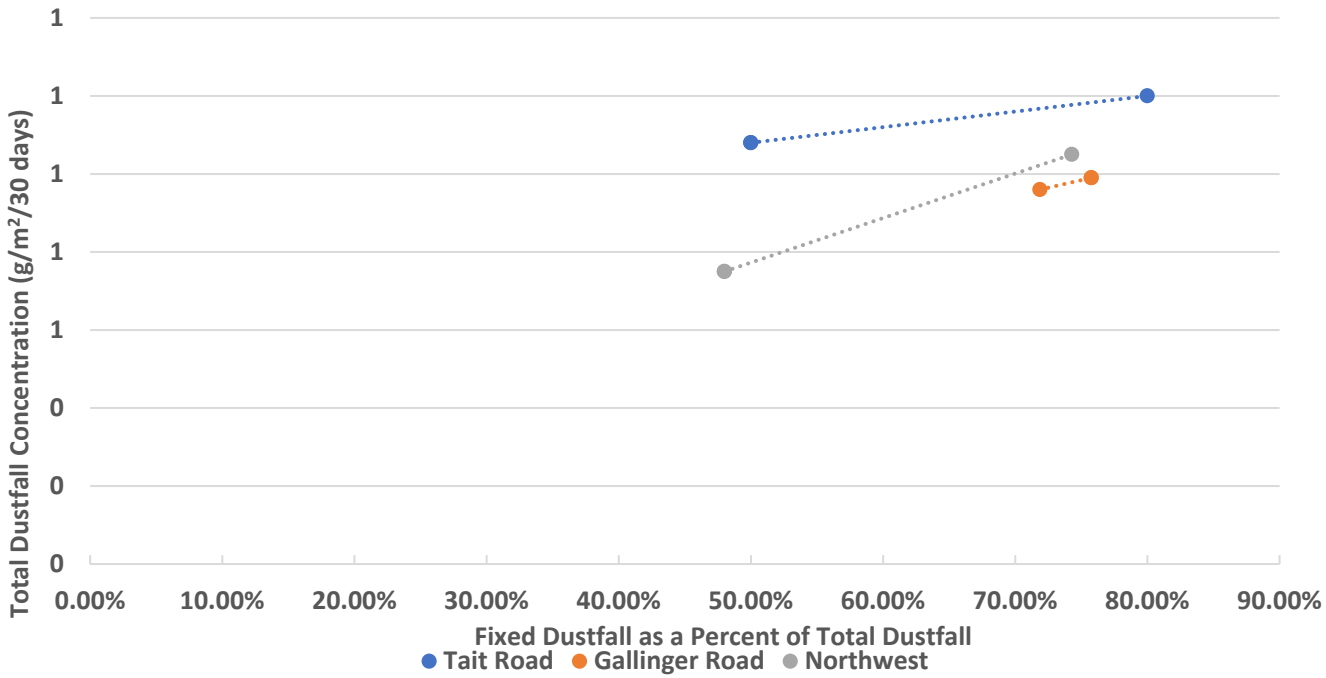

Figure 6-7. Fixed Dustfall Fraction vs. Total Dustfall Concentration

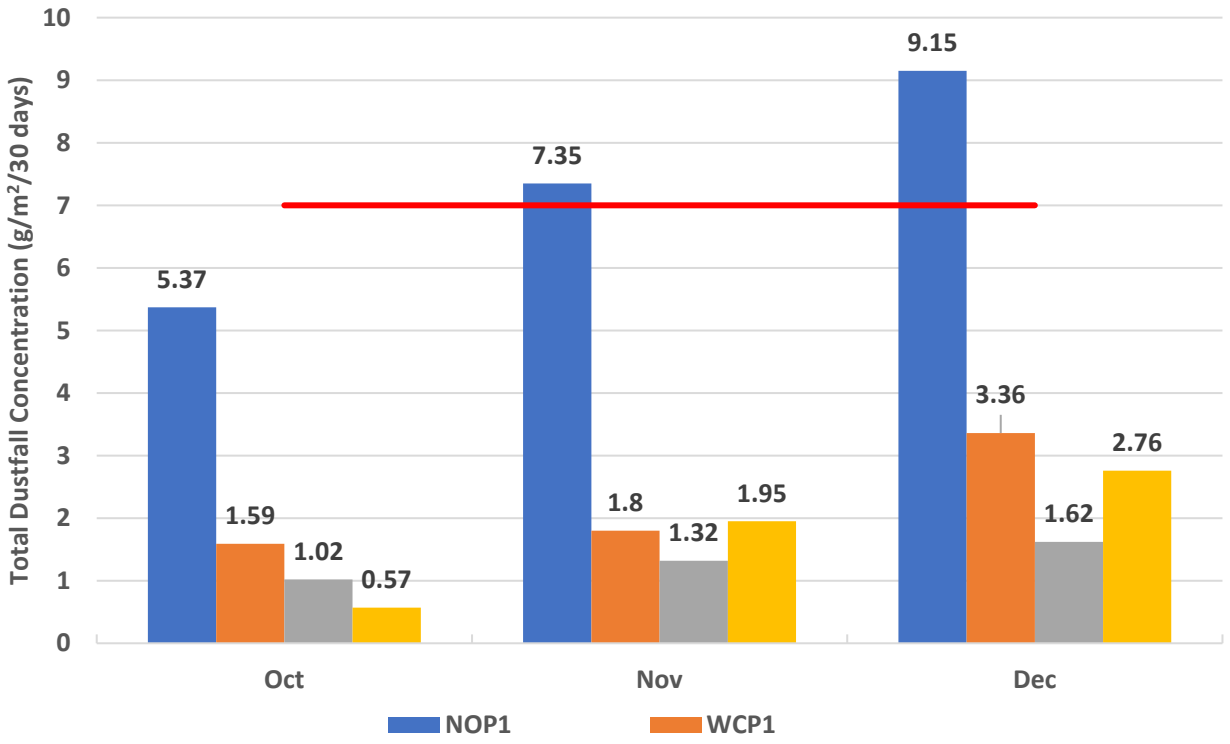

Figure 6-8. Dustfall Sampling Results at Non-POI Stations

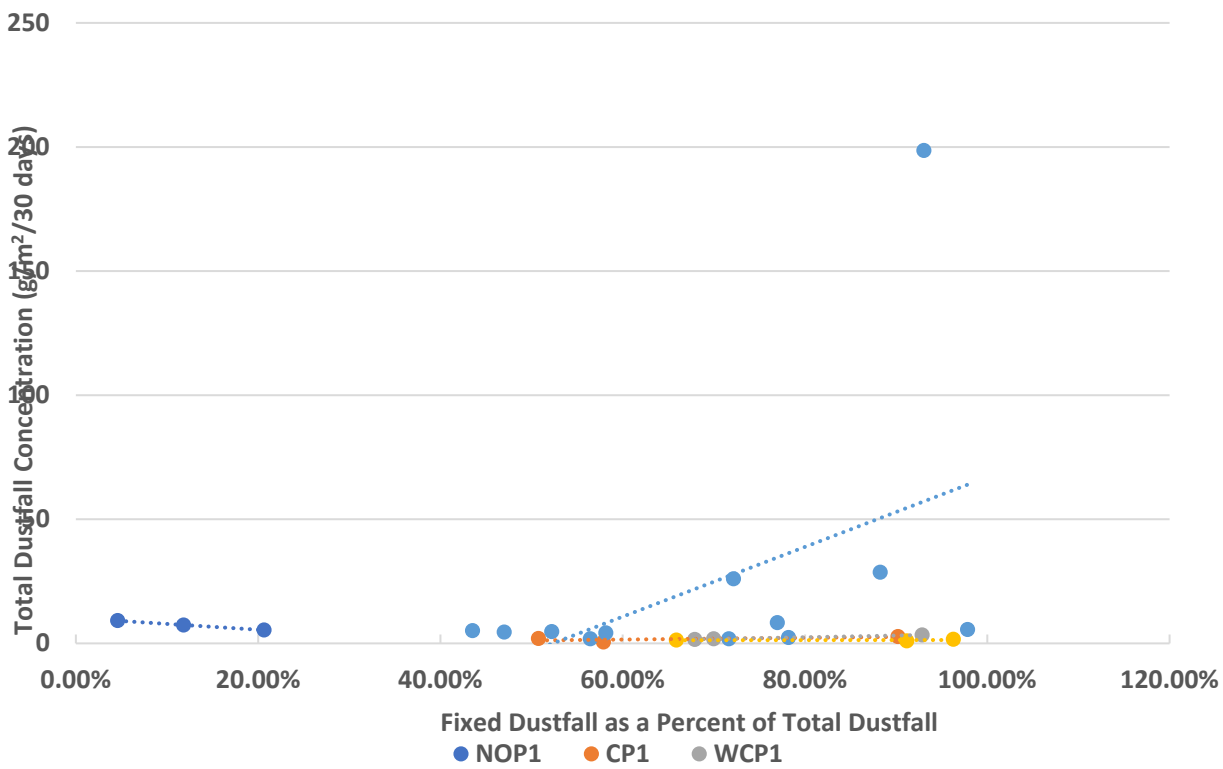

Figure 6-9.Fixed Dustfall Fraction vs. Total Dustfall Concentration

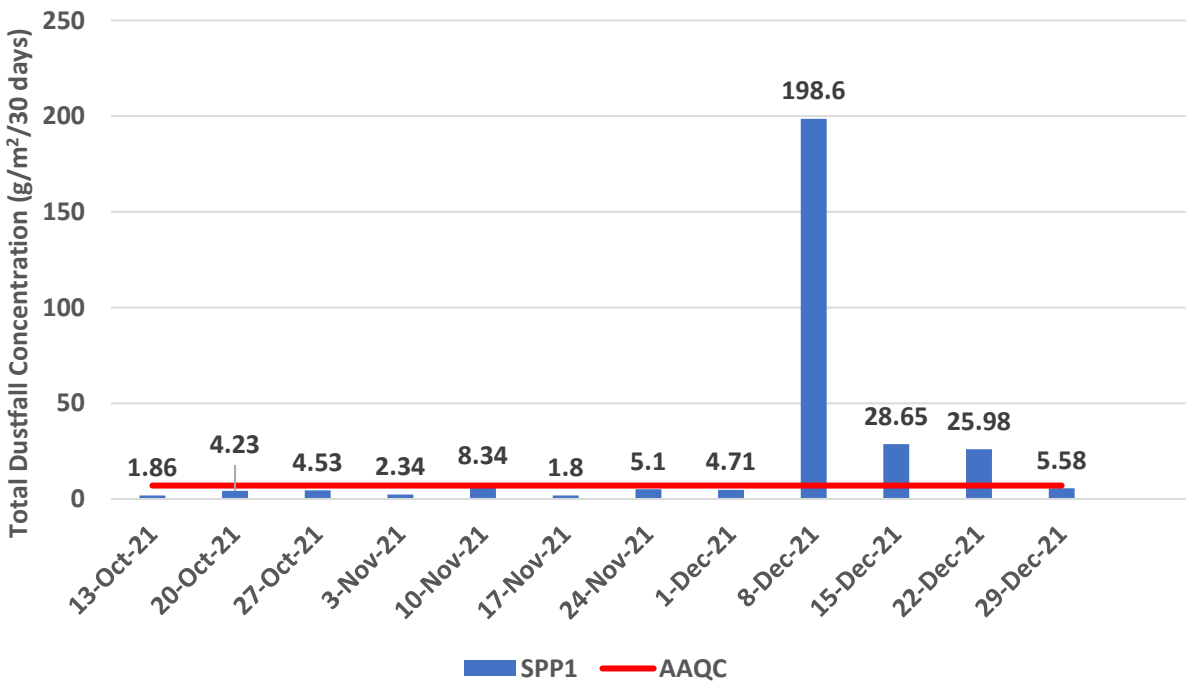

Figure 6-10. Dustfall Sampling Results at SPP1 Station

Table 6-6: SPP1 Dustfall Samples versus Stockpile Size and Weather Data

Start Date	Stop Date	Stockpile Size	Precipitation	Avg. Wind Speed	Avg. Wind Direction	Total Dustfall
		(%)	(mm)	(km/hr)	(°)	(g/m²/30 days)
October 13	October 20	65.10%	0.7	8.1	247.5	2
October 20	October 27	89.10%	14.4	7.1	45	4
October 27	November 3	83.70%	16.5	7.7	281.25	5
November 3	November 10	86.20%	3.6	4.9	225	2
November 10	November 17	80.20%	35.2	7.7	45	8
November 17	November 24	89.5%	1.3	9.9	270	2
November 24	December 1	78.20%	3.5	6.6	247.5	5
December 1	December 8	88.30%	4.3	9.7	281.25	5
December 8	December 15	65.40%	1.2	7.1	225	199
December 15	December 22	58.30%	9.8	3.2	281.25	29
December 22	December 29	81.90%	16.1	3.7	67.5	26

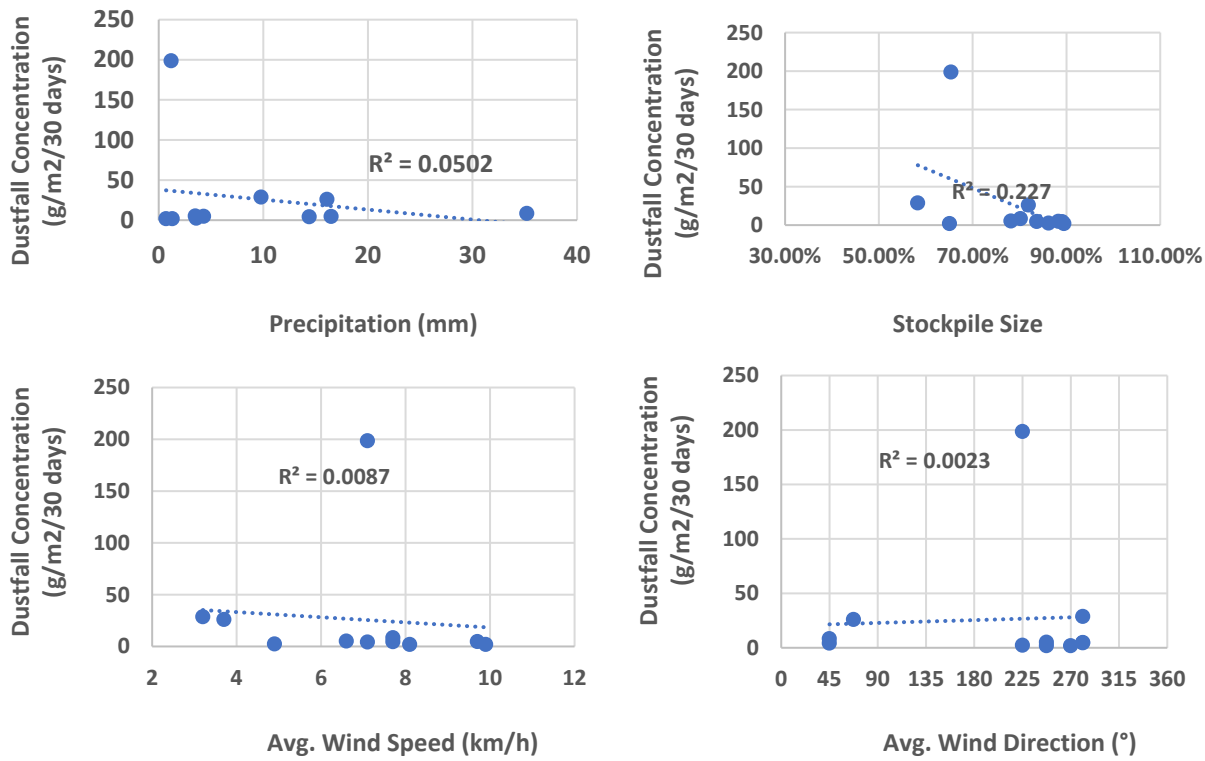

Figure 6-11. SPP1 Dustfall Concentrations vs. Stockpile Size and Weather Data

6.4 PASSIVE SO_2 AND NO_2

The Tait Road and Gallinger Road Stations collected three (3) valid samples out of a possible three (3) sampling opportunities (100% valid data) in this quarter.

There are no MECP standards, guidelines, or Ontario AAQCs for SO_2 or NO_2 for a 30-day averaging period. Instead, the 30-day measured average SO_2 or NO_2 concentrations allow for future analysis of trends in the ambient concentrations, identification of notable increases, and comparison with dispersion modelling results.

For NO_2, the monthly results are compared against Ontario's 24-hour NO_2 AAQC (200 µg/m^3) converted to an equivalent 30-day average (78 µg/m^3) using the methodology outlined in Table 7-1 of the MECP's "Guideline A-10: Procedure for Preparing an Emission Summary and Dispersion Modelling Report" (2019).

For SO_2, the monthly results are compared against Alberta's 30-day SO_2 Ambient Air Quality Objective (AAQO) of 30 µg/m^3 (Alberta Environment and Parks, 2019).

For this quarter, the arithmetic mean SO_2 concentration was 0.61 µg/m^3 at the Tait Road and 0.52 µg/m^3 at the Gallinger Road Stations. The arithmetic mean NO_2 concentrations were 2.01 µg/m^3 and 2.07 µg/m^3 at the Tait Road and Gallinger Road Stations, respectively.

The maximum monthly concentrations of SO_2 was 0.79 µg/m^3 for the Tait Road station in July and 0.52 µg/m^3 for the Gallinger Road station in all three (3) samples. The maximum monthly

concentration of NO_2 was 2.82 µg/m^3 at the Tait Road Station in October and 3.01 µg/m^3 at the Gallinger Road Station in December.

Laboratory data is provided as the concentration of the contaminant in the sample, in parts per billion by volume. This value is then converted to the appropriate units for reporting using the equation seen below:

$$Concentration\ (\mu g/m^3) = Lab\ Concentration\ (ppbv) \times \frac{Molecular\ Weight}{Molar\ Volume}$$

In this quarter, there were no samples that exceeded the converted 24-hour NO_2 Ontario AAQC (78 µg/m^3), and no samples that exceeded the 30-day Alberta SO_2 AAQO (30 µg/m^3).

Data is summarized for SO_2 and NO_2 in **Table 6-7**. Sample data from all runs and further statistical analyses are presented in **Appendix A-4**.

Table 6-7: Summary Statistics for SO_2 and NO_2. Concentrations presented in µg/m^3.

	Tait Road Station		**Gallinger Road Station**		
	SO_2	**NO_2**	**SO_2**	**NO_2**	
Number of Valid Samples	3	3	3	3	
% Valid Data	100%	100%	100%	100%	
Arithmetic Mean	0.61	2.01	0.52	2.07	
Monthly Maximum	0.79	2.82	0.52	3.01	
Limit	30	78	30	78	
Samples > Limit	0	0	0	0	
MDL	0.26	0.19	0.26	0.19	
Samples < MDL	0	0	0	0	

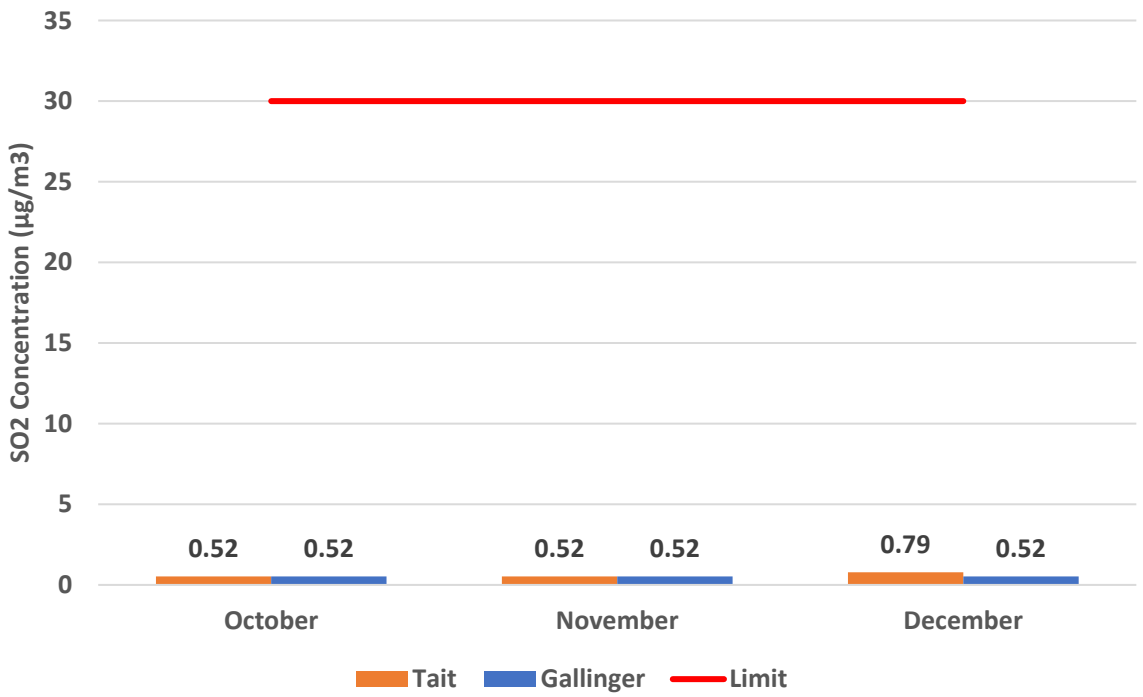

Figure 6-12. SO_2 Monitoring Results

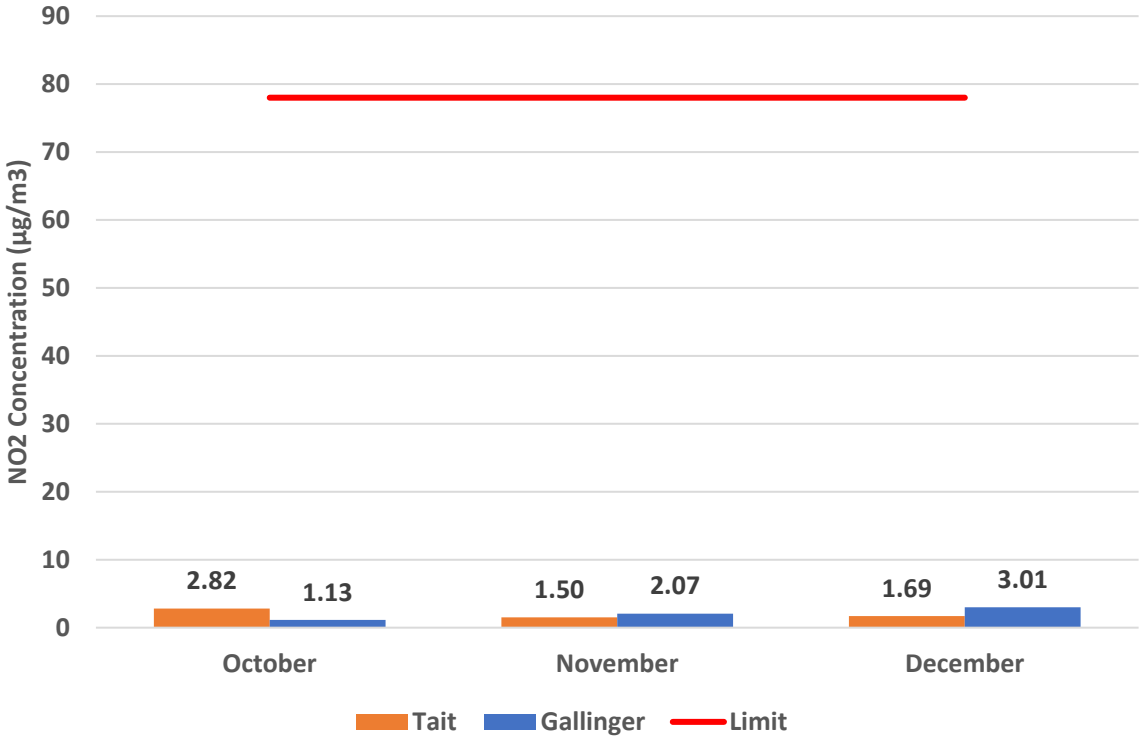

Figure 6-13. NO_2 Monitoring Results

Section 7. MITIGATION MEASURES

The Northwest PQ200 Sampler was sent for repairs and was offline from the beginning of October to mid-November.

Some of the total dustfall samples taken at the SPP1, and N0P1 Stations are in exceedance of the AAQC. However, since these Stations are located within the property boundary and not considered a point of impingement, no mitigation measures have been implemented at this time.

Section 8. CONCLUSION

The Rainy River Mine Ambient Air Quality Monitoring Program was conducted in the fourth quarter of 2021 in accordance with the Site's Amended Environmental Compliance Approval (ECA) Number 0412-A2LR4V and the MECP Program Approval Letter.

Samples were taken every sixth (6th) day for total suspended particulate matter (TSP), metals, and respirable particulate matter ($PM_{2.5}$). Samples were taken monthly for total dustfall, sulphur dioxide (SO_2), and nitrogen dioxide (NO_2).

These samples were sent out for analysis in accordance with the methods prescribed in the Operations Manual.

There were no exceedances of the TSP, $PM_{2.5}$, metal, dustfall, NO_2, or SO_2 limits.

Section 9. REFERENCES

Alberta Environment and Parks. (2019, January). *Alberta Ambient Air Quality Objectives and Guidelines Summary.* Retrieved from Ambient Air Quality Objectives: https://open.alberta.ca/dataset/0d2ad470-117e-410f-ba4f-aa352cb02d4d/resource/4ddd8097-6787-43f3-bb4a-908e20f5e8f1/download/aaqo-summary-jan2019.pdf

American Society for Testing and Materials International. (2017). *ASTM D1739-98(2017), Standard Test Method for Collection and Measurement of Dustfall (Settleable Particulate Matter).* Retrieved from Standards Products: https://www.astm.org/Standards/D1739.htm

Bari, M., Curran, R. T., & Kindzierski, W. B. (2015). Field performance evaluation of Maxxam passive samplers for regional monitoring of ambient SO2, NO2 and O3 concentrations in Alberta, Canada. *Atmospheric Environment, 114*, 39-47.

British Columbia Ministry of the Environment. (2020). *Section G: Air Constituents - Inorganic.* Retrieved from B.C. Environmental Laboratory Manual: https://www2.gov.bc.ca/assets/gov/environment/research-monitoring-and-reporting/monitoring/emre/lab-manual/section-g-2020.pdf

Government of Ontario. (2019, January 1). *O. Reg. 419/05: Air Pollution - Local Air Quality*. Retrieved from Ontario Laws: https://www.ontario.ca/laws/regulation/050419

Ontario Ministry of the Environment, Conservation and Parks. (2019, May 14). *Operations manual for air quality monitoring in Ontario*. Retrieved from Ontario.ca: https://www.ontario.ca/document/operations-manual-air-quality-monitoring-ontario-0

Ontario Ministry of the Environment, Conservation and Parks. (2019, May 1). *Procedure for Preparing an Emission Summary and Dispersion Modelling Report.* Retrieved from Guideline A-10: https://files.ontario.ca/books/20180309_moecc_65_emission_aoda_en-aoda.pdf

Ontario Ministry of the Environment, Conservation and Parks. (2020, May 1). *Ambient Air Quality Criteria.* Retrieved from Ontario's Ambient Air Quality Criteria: https://files.ontario.ca/mecp-ambient-air-quality-criteria-list-en-2020-05-01.pdf

U.S. EPA. (1998, January). *Method 6020A: Inductively Coupled Plasma - Mass Spectrometry.* Retrieved from U.S. Environmental Protection Agency: https://19january2017snapshot.epa.gov/sites/production/files/2015-07/documents/epa-6020a.pdf

U.S. EPA. (1999, June). *Compendium of Methods for the Determination of Inorganic Compounds in Ambient Air: Compendium Method IO-3.1.* Retrieved from U.S. Environmental Protection Agency: https://www.epa.gov/sites/production/files/2015-07/documents/epa-io-3.1.pdf

U.S. EPA. (1999, June). *Compendium of Methods for the Determination of Inorganic Compounds in Ambient Air: Compendium Method IO-3.5.* Retrieved from U.S. Environmental

Protection Agency: https://www.epa.gov/sites/production/files/2015-07/documents/epa-io-3.5.pdf

U.S. EPA. (2016, January). *Quality Assurance Guidance Document 2.12: Monitoring PM2.5 in Ambient Air Using Designated Reference or Class I Equivalent Methods.* Retrieved from U.S. Environmental Protection Agency: https://www3.epa.gov/ttnamti1/files/ambient/pm25/qa/m212.pdf

United States Environmental Protection Agency. (2020, November). *2021 EPA Sampling Schedule.* Retrieved from Sampling Schedule Calendar: https://www.epa.gov/sites/production/files/2020-11/documents/2021_sampling_schedule.pdf

Section 10. CLOSING

The *Rainy River Mine Ambient Air Quality Monitoring Program Fourth Quarter 2021 Report* was prepared by New Gold Inc. The quality of information, conclusions, and estimates contained herein are based on:

- Information available at the time of preparation;
- Data supplied by outside sources; and
- The assumptions, conditions, and qualifications set forth in this document.

If you require further information regarding the above, or the Mine in general, please contact the undersigned at 1(807) 234-8170.

Sincerely,

New Gold Inc.

Rainy River Mine

Prepared By:

Garnet Cornell

Environment Superintendent

APPENDIX A:
SAMPLING RESULTS

Appendix A-1 TSP, Metals, and $PM_{2.5}$ Sampling Results

Appendix A-2 Total Dustfall Sampling Results

Appendix A-3 Dustfall Metals Sampling Results

Appendix A-4 SO_2 and NO_2 Passive Sampling Results

APPENDIX A-1:

TSP, METALS, AND $PM_{2.5}$ SAMPLING RESULTS

Tait Road Station Monitoring Results
(concentrations expressed in µg/m³)

Date	TSP	As	Cd	Cr	Co	Cu	Fe	Pb	Mn	Ni	Se	V	Zn	$PM_{2.5}$
1-Oc	42.76	*1.04E-03*	*6.95E-04*	*1.74E-03*	*6.95E-04*	*6.20E-02*	8.55E-01	*1.04E-03*	*3.98E-02*	*1.04E-03*	*3.48E-03*	*1.74E-03*	*1.04E-03*	6.95E-04
7-Oct	18.73	*1.04E-03*	*6.91E-04*	*1.73E-03*	*6.91E-04*	*5.70E-02*	5.10E-01	*1.04E-03*	*1.62E-02*	*1.04E-03*	*3.46E-03*	*1.73E-03*	*1.04E-03*	6.91E-04
13-Oct	11.66	*9.82E-04*	*6.55E-04*	*4.00E-03*	*6.55E-04*	*6.31E-02*	1.38E+00	*8.97E-03*	*5.16E-02*	*2.16E-03*	*3.27E-03*	*1.64E-03*	*9.82E-04*	6.55E-04
19-Oct	33.93	*1.03E-03*	*6.87E-04*	*1.72E-03*	*6.87E-04*	*3.19E-02*	3.83E-01	*1.03E-03*	*1.16E-02*	*1.03E-03*	*3.43E-03*	*1.72E-03*	*1.03E-03*	6.87E-04
25-Oct	9.09	*1.21E-03*	*8.05E-04*	*2.01E-03*	*8.05E-04*	*8.21E-02*	4.56E-01	*1.21E-03*	*2.60E-02*	*1.21E-03*	*4.02E-03*	*2.01E-03*	*1.21E-03*	8.05E-04
31-Oct	1.62	*1.01E-03*	*6.75E-04*	*1.69E-03*	*6.75E-04*	*8.50E-02*	1.01E+00	*1.01E-03*	*4.04E-02*	*1.01E-03*	*3.37E-03*	*1.69E-03*	*1.01E-03*	6.75E-04
6-Nov	N/A	*N/A*	*N/A*	*N/A*	*N/A*	N/A	N/A	*N/A*	N/A	*N/A*	*N/A*	*N/A*	N/A	N/A
12-Nov	30.73	*9.52E-04*	*6.35E-04*	*1.59E-03*	*6.35E-04*	*9.27E-02*	*8.25E-01*	*9.52E-04*	*3.43E-02*	*9.52E-04*	*3.17E-03*	*1.59E-03*	*9.52E-04*	6.35E-04
18-Nov	8.44	*8.92E-04*	*5.95E-04*	*1.49E-03*	*5.95E-04*	*3.37E-02*	*4.42E-01*	*8.92E-04*	*1.24E-02*	*8.92E-04*	*2.97E-03*	*1.49E-03*	*8.92E-04*	5.95E-04
24-Nov	65.83	*9.68E-04*	*6.45E-04*	*1.61E-03*	*6.45E-04*	*4.94E-02*	*5.40E-01*	*9.68E-04*	*1.67E-02*	*9.68E-04*	*3.23E-03*	*1.61E-03*	*9.68E-04*	6.45E-04
30-Nov	2.34	*9.23E-04*	*6.16E-04*	*1.54E-03*	*6.16E-04*	*4.63E-02*	*4.54E-01*	*9.23E-04*	*1.03E-02*	*9.23E-04*	*3.08E-03*	*1.54E-03*	*9.23E-04*	6.16E-04
6-Dec	7.95	*9.39E-04*	*6.26E-04*	*1.57E-03*	*6.26E-04*	*6.58E-02*	*1.67E-01*	*9.39E-04*	*6.20E-03*	*9.39E-04*	*3.13E-03*	*1.57E-03*	*9.39E-04*	6.26E-04
12-Dec	6.56	*9.28E-04*	*6.19E-04*	*1.55E-03*	*6.19E-04*	*4.65E-02*	*1.63E-01*	*9.28E-04*	*4.95E-03*	*9.28E-04*	*3.09E-03*	*1.55E-03*	*9.28E-04*	6.19E-04
18-Dec	7.38	*9.07E-04*	*6.05E-04*	*1.51E-03*	*6.05E-04*	*3.10E-02*	*2.37E-01*	*9.07E-04*	*9.92E-03*	*9.07E-04*	*3.02E-03*	*1.51E-03*	*9.07E-04*	6.05E-04
24-Dec	13.70	*8.97E-04*	*5.98E-04*	*1.50E-03*	*5.98E-04*	*3.88E-02*	*4.71E-01*	*8.97E-04*	*2.15E-02*	*8.97E-04*	*2.99E-03*	*1.50E-03*	*8.97E-04*	5.98E-04
30-Dec	8.32	*8.55E-04*	*5.70E-04*	*1.43E-03*	*5.70E-04*	*3.69E-02*	*4.49E-01*	*8.55E-04*	*2.10E-02*	*8.55E-04*	*2.85E-03*	*1.43E-03*	*8.55E-04*	5.70E-04
No. Valid Samples	10	10	10	10	10	10	10	10	10	10	10	10	10	16
% Valid Data	63%	63%	63%	63%	63%	63%	63%	63%	63%	63%	63%	63%	63%	100%
Arithmetic Mean	14.96	9.72E-04	6.48E-04	1.78E-03	6.48E-04	5.48E-02	5.56E-01	1.50E-03	2.15E-02	1.05E-03	3.24E-03	1.62E-03	1.32E-02	4.84
Geometric Mean	9.04	9.68E-04	6.45E-04	1.71E-03	6.45E-04	5.15E-02	4.72E-01	1.12E-03	1.74E-02	1.02E-03	3.23E-03	1.61E-03	1.09E-02	3.59
Max Sample	65.83	1.21E-03	8.05E-04	4.00E-03	8.05E-04	9.27E-02	1.38E+00	8.97E-03	5.16E-02	2.16E-03	4.02E-03	2.01E-03	4.24E-02	15.33
Min Sample	1.62	8.55E-04	5.70E-04	1.43E-03	5.70E-04	3.10E-02	1.63E-01	8.55E-04	4.95E-03	8.55E-04	2.85E-03	1.43E-03	5.01E-03	0.90
July Max	42.76	1.21E-03	8.05E-04	4.00E-03	8.05E-04	8.50E-02	1.38E+00	8.97E-03	5.16E-02	2.16E-03	4.02E-03	2.01E-03	4.24E-02	15.33
August Max	65.83	9.68E-04	6.45E-04	1.61E-03	6.45E-04	9.27E-02	8.25E-01	9.68E-04	3.43E-02	9.68E-04	3.23E-03	1.61E-03	1.80E-02	7.54
September Max	13.70	9.39E-04	6.26E-04	1.57E-03	6.26E-04	6.58E-02	4.71E-01	9.39E-04	2.15E-02	9.39E-04	3.13E-03	1.57E-03	8.59E-03	8.62
90th Percentile	39.23	1.04E-03	6.94E-04	1.90E-03	6.94E-04	8.38E-02	9.49E-01	1.14E-03	4.02E-02	1.14E-03	3.47E-03	1.73E-03	2.17E-02	8.08
95th Percentile	49.68	1.09E-03	7.28E-04	2.61E-03	7.28E-04	8.73E-02	1.12E+00	3.54E-03	4.38E-02	1.49E-03	3.64E-03	1.82E-03	2.85E-02	10.30
Comparison Limit	120	0.3	0.025	0.5	0.1	50	4	0.5	0.4	0.2	10	2	120	27
No. > Limit	0	0	0	0	0	0	0	0	0	0	0	0	0	0
MDL (µg)	2,300	3	2	5	2	4	20	3	1	3	10	5	5	15
No. < MDL	15	15	15	15	15	15	15	15	15	15	15	15	15	15

All non-detectable results (i.e., < MDL) are reported as ½ MDL and are denoted by italics and underlining.
N/A: Not applicable
----: Invalid sample (Invalid samples that were used in calculations are identified in bold)

Gallinger Road Station Monitoring Results
(concentrations expressed in µg/m³)

Date	TSP	As	Cd	Cr	Co	Cu	Fe	Pb	Mn	Ni	Se	V	Zn	$PM_{2.5}$
1-Oc	27.00	*9.29E-04*	*6.19E-04*	*1.55E-03*	*6.19E-04*	*1.00E-01*	*9.16E-01*	*9.29E-04*	*3.57E-02*	*9.29E-04*	*3.10E-03*	*1.55E-03*	*1.26E-02*	12.87
7-Oct	19.08	*1.00E-03*	*6.67E-04*	*5.34E-03*	*6.67E-04*	*1.39E-01*	*2.36E+00*	*2.20E-03*	*6.48E-02*	*3.20E-03*	*3.34E-03*	*4.07E-03*	*1.89E-02*	7.43
13-Oct	5.43	*9.26E-04*	*6.17E-04*	*4.44E-03*	*6.17E-04*	*1.06E-01*	*1.85E+00*	*9.26E-04*	*4.97E-02*	*2.59E-03*	*3.09E-03*	*3.33E-03*	*2.03E-02*	2.22
19-Oct	22.79	*8.48E-04*	*5.65E-04*	*1.41E-03*	*5.65E-04*	*8.54E-02*	*7.52E-01*	*8.48E-04*	*1.90E-02*	*8.48E-04*	*2.83E-03*	*1.41E-03*	*8.65E-03*	3.71
25-Oct	5.23	*9.80E-04*	*6.53E-04*	*1.63E-03*	*6.53E-04*	*1.34E-01*	*4.56E-01*	*9.80E-04*	*1.87E-02*	*9.80E-04*	*3.27E-03*	*1.63E-03*	*1.53E-02*	1.92
31-Oct	92.83	*9.47E-04*	*6.31E-04*	*1.58E-03*	*6.31E-04*	*1.02E-01*	*8.90E-01*	*5.68E-03*	*4.18E-02*	*9.47E-04*	*3.16E-03*	*1.58E-03*	*3.78E-02*	1.86
6-Nov	48.18	*9.65E-04*	*6.43E-04*	*1.61E-03*	*6.43E-04*	*1.24E-01*	*2.34E-01*	*9.65E-04*	*7.01E-03*	*9.65E-04*	*3.22E-03*	*1.61E-03*	*7.66E-03*	7.90
12-Nov	3.38	*9.05E-04*	*6.03E-04*	*1.51E-03*	*6.03E-04*	*6.33E-02*	*8.93E-01*	*9.05E-04*	*2.82E-02*	*9.05E-04*	*3.02E-03*	*1.51E-03*	*1.04E-02*	0.90
18-Nov	6.54	*9.52E-04*	*6.35E-04*	*1.59E-03*	*6.35E-04*	*6.48E-02*	*1.02E+00*	*9.52E-04*	*2.91E-02*	*9.52E-04*	*3.17E-03*	*1.59E-03*	*1.94E-02*	0.90
24-Nov	10.79	*9.36E-04*	*6.24E-04*	*1.56E-03*	*6.24E-04*	*4.58E-02*	*8.92E-02*	*9.36E-04*	*3.37E-03*	*9.36E-04*	*3.12E-03*	*1.56E-03*	*5.74E-03*	3.05
30-Nov	11.41	*1.00E-03*	*6.67E-04*	*1.67E-03*	*6.67E-04*	*4.56E-02*	*2.97E-01*	*1.00E-03*	*8.34E-03*	*1.00E-03*	*3.34E-03*	*1.67E-03*	*6.81E-03*	6.17
6-Dec	34.29	*8.98E-04*	*5.98E-04*	*1.50E-03*	*5.98E-04*	*2.62E-02*	*1.91E-01*	*8.98E-04*	*8.44E-03*	*8.98E-04*	*2.99E-03*	*1.50E-03*	*8.98E-03*	0.90
12-Dec	1.54	*1.00E-03*	*6.70E-04*	*1.67E-03*	*6.70E-04*	*4.37E-02*	*1.69E-01*	*1.00E-03*	*5.09E-03*	*1.00E-03*	*3.35E-03*	*1.67E-03*	*5.16E-03*	6.17
18-Dec	13.65	*8.42E-04*	*5.62E-04*	*1.40E-03*	*5.62E-04*	*3.94E-02*	*2.91E-01*	*8.42E-04*	*1.12E-02*	*8.42E-04*	*2.81E-03*	*1.40E-03*	*9.55E-03*	1.98
24-Dec	66.66	*9.61E-04*	*6.41E-04*	*1.60E-03*	*6.41E-04*	*4.27E-02*	*1.16E+00*	*1.99E-03*	*4.47E-02*	*9.61E-04*	*3.20E-03*	*1.60E-03*	*3.06E-02*	11.80
30-Dec	8.49	*9.10E-04*	*6.06E-04*	*1.52E-03*	*6.06E-04*	*4.04E-02*	*1.10E+00*	*1.88E-03*	*4.23E-02*	*9.10E-04*	*3.03E-03*	*1.52E-03*	*2.95E-02*	10.96
No. Valid Samples	16	16	16	16	16	16	16	16	16	16	16	16	16	16
% Valid Data	16	100%	100%	100%	100%	100%	100%	100%	100%	100%	100%	100%	100%	100%
Arithmetic Mean	100%	9.38E-04	6.25E-04	1.97E-03	6.25E-04	7.51E-02	7.92E-01	1.43E-03	2.61E-02	1.18E-03	3.13E-03	1.83E-03	1.55E-02	5.04
Geometric Mean	23.58	9.37E-04	6.24E-04	1.79E-03	6.24E-04	6.64E-02	5.56E-01	1.21E-03	1.88E-02	1.07E-03	3.12E-03	1.73E-03	1.29E-02	3.49
Max Sample	13.76	1.00E-03	6.70E-04	5.34E-03	6.70E-04	1.39E-01	2.36E+00	5.68E-03	6.48E-02	3.20E-03	3.35E-03	4.07E-03	3.78E-02	12.87
Min Sample	92.83	8.42E-04	5.62E-04	1.40E-03	5.62E-04	2.62E-02	8.92E-02	8.42E-04	3.37E-03	8.42E-04	2.81E-03	1.40E-03	5.16E-03	0.90
July Max	1.54	1.00E-03	6.67E-04	5.34E-03	6.67E-04	1.39E-01	2.36E+00	5.68E-03	6.48E-02	3.20E-03	3.34E-03	4.07E-03	2.03E-02	12.87
August Max	92.83	1.00E-03	6.67E-04	1.67E-03	6.67E-04	1.24E-01	1.02E+00	1.00E-03	2.91E-02	1.00E-03	3.34E-03	1.67E-03	3.78E-02	7.90
September Max	92.83	1.00E-03	6.70E-04	1.67E-03	6.70E-04	4.37E-02	1.16E+00	1.99E-03	4.47E-02	1.00E-03	3.35E-03	1.67E-03	3.06E-02	11.80
90th Percentile	66.66	1.00E-03	6.67E-04	3.06E-03	6.67E-04	1.29E-01	1.50E+00	2.09E-03	4.72E-02	1.80E-03	3.34E-03	2.50E-03	3.01E-02	11.38
95th Percentile	57.42	1.00E-03	6.68E-04	4.67E-03	6.68E-04	1.35E-01	1.97E+00	3.07E-03	5.35E-02	2.74E-03	3.34E-03	3.52E-03	3.24E-02	12.07
Comparison Limit	120	0.3	0.025	0.5	0.1	50	4	0.5	0.4	0.2	10	2	120	27
No. > Limit	0	0	0	0	0	0	0	0	0	0	0	0	0	0
MDL (µg)	2,300	3	2	5	2	4	20	3	1	3	10	5	5	15
No. < MDL	16	16	16	16	16	16	16	16	16	16	16	16	16	16

All non-detectable results (i.e., < MDL) are reported as ½ MDL and are denoted by italics and underlining.
N/A: Not applicable
----: Invalid sample (Invalid samples that were used in calculations are identified in bold)

Northwest Station Monitoring Results
(concentrations expressed in µg/m³)

Date	TSP	As	Cd	Cr	Co	Cu	Fe	Pb	Mn	Ni	Se	V	Zn	$PM_{2.5}$
1-Oc	30.45	*9.74E-04*	*6.49E-04*	*1.62E-03*	*6.49E-04*	*1.19E-01*	*4.91E-01*	*9.74E-04*	*2.81E-02*	*9.74E-04*	*3.25E-03*	*1.62E-03*	*9.15E-03*	
7-Oct	15.20	*9.66E-04*	*6.44E-04*	*1.61E-03*	*6.44E-04*	*1.57E-01*	*3.30E-01*	*9.66E-04*	*1.02E-02*	*9.66E-04*	*3.22E-03*	*1.61E-03*	*6.70E-03*	
13-Oct	9.75	*1.05E-03*	*7.01E-04*	*1.75E-03*	*7.01E-04*	*1.70E-01*	*2.64E-01*	*1.05E-03*	*1.19E-02*	*1.05E-03*	*3.51E-03*	*1.75E-03*	*1.28E-02*	
19-Oct	19.78	*9.92E-04*	*6.62E-04*	*1.65E-03*	*6.62E-04*	*9.06E-02*	*1.66E+00*	*9.92E-04*	*4.76E-02*	*9.92E-04*	*3.31E-03*	*3.64E-03*	*2.35E-02*	
25-Oct	94.09	*9.80E-04*	*6.53E-04*	*1.63E-03*	*6.53E-04*	*1.41E-01*	*1.45E+00*	*3.53E-03*	*4.68E-02*	*9.80E-04*	*3.27E-03*	*3.59E-03*	*2.55E-02*	
31-Oct	20.23	*9.54E-04*	*6.36E-04*	*1.59E-03*	*6.36E-04*	*1.30E-01*	*2.18E-01*	*9.54E-04*	*2.04E-02*	*9.54E-04*	*3.18E-03*	*1.59E-03*	*1.33E-02*	
6-Nov	9.63	*8.97E-04*	*5.98E-04*	*1.50E-03*	*5.98E-04*	*8.20E-02*	*2.50E-01*	*8.97E-04*	*7.48E-03*	*8.97E-04*	*2.99E-03*	*1.50E-03*	*7.18E-03*	
12-Nov	4.14	*9.85E-04*	*6.57E-04*	*1.64E-03*	*6.57E-04*	*2.80E-01*	*5.50E-01*	*9.85E-04*	*2.23E-02*	*9.85E-04*	*3.28E-03*	*1.64E-03*	*1.96E-02*	
18-Nov	5.30	*8.55E-04*	*5.70E-04*	*1.43E-03*	*5.70E-04*	*1.53E-01*	*5.13E-01*	*8.55E-04*	*1.56E-02*	*8.55E-04*	*2.85E-03*	*1.43E-03*	*1.24E-02*	
24-Nov	7.51	*9.32E-04*	*6.21E-04*	*1.55E-03*	*6.21E-04*	*1.25E-01*	*6.89E-01*	*9.32E-04*	*1.69E-02*	*9.32E-04*	*3.11E-03*	*1.55E-03*	*1.05E-02*	6.05
30-Nov	5.60	*8.94E-04*	*5.96E-04*	*1.49E-03*	*5.96E-04*	*2.24E-01*	*1.05E+00*	*8.94E-04*	*2.46E-02*	*8.94E-04*	*2.98E-03*	*1.49E-03*	*1.45E-02*	12.04
6-Dec	6.57	*9.21E-04*	*6.14E-04*	*1.53E-03*	*6.14E-04*	*1.68E-01*	*2.96E-01*	*9.21E-04*	*9.21E-03*	*9.21E-04*	*3.07E-03*	*1.53E-03*	*7.55E-03*	10.96
12-Dec	5.74	*8.04E-04*	*5.36E-04*	*1.34E-03*	*5.36E-04*	*1.62E-01*	*9.65E-01*	*8.04E-04*	*2.23E-02*	*8.04E-04*	*2.68E-03*	*1.34E-03*	*1.13E-02*	4.61
18-Dec	5.15	*7.73E-04*	*5.15E-04*	*1.29E-03*	*5.15E-04*	*1.09E-01*	*3.34E-01*	*7.73E-04*	*1.19E-02*	*7.73E-04*	*2.58E-03*	*1.29E-03*	*8.35E-03*	2.22
24-Dec	6.07	*8.12E-04*	*5.42E-04*	*1.35E-03*	*5.42E-04*	*1.78E-01*	*5.96E-01*	*8.12E-04*	*1.39E-02*	*8.12E-04*	*2.71E-03*	*1.35E-03*	*9.70E-03*	16.17
30-Dec	15.52	*9.13E-04*	*6.09E-04*	*1.52E-03*	*6.09E-04*	*2.00E-01*	*6.70E-01*	*9.13E-04*	*1.63E-02*	*9.13E-04*	*3.04E-03*	*1.52E-03*	*1.15E-02*	4.97
No. Valid Samples	15	15	15	15	15	15	15	15	15	15	15	15	15	7
% Valid Data	94%	94%	94%	94%	94%	94%	94%	94%	94%	94%	94%	94%	94%	47%
Arithmetic Mean	16.7	9.19E-04	6.13E-04	1.53E-03	6.13E-04	1.56E-01	6.46E-01	1.08E-03	2.03E-02	9.19E-04	3.06E-03	1.78E-03	1.27E-02	9.19E-04
Geometric Mean	10.7	9.16E-04	6.11E-04	1.53E-03	6.11E-04	1.48E-01	5.34E-01	9.92E-04	1.77E-02	9.16E-04	3.05E-03	1.68E-03	1.17E-02	9.16E-04
Max Sample	94.1	1.05E-03	7.01E-04	1.75E-03	7.01E-04	2.80E-01	1.66E+00	3.53E-03	4.76E-02	1.05E-03	3.51E-03	3.64E-03	2.55E-02	1.05E-03
Min Sample	16.7	7.73E-04	5.15E-04	1.29E-03	5.15E-04	8.20E-02	2.18E-01	7.73E-04	7.48E-03	7.73E-04	2.58E-03	1.29E-03	6.70E-03	7.73E-04
July Max	94.1	1.05E-03	7.01E-04	1.75E-03	7.01E-04	1.70E-01	1.66E+00	3.53E-03	4.76E-02	1.05E-03	3.51E-03	3.64E-03	2.55E-02	1.05E-03
August Max	20.2	9.85E-04	6.57E-04	1.64E-03	6.57E-04	2.80E-01	1.05E+00	9.85E-04	2.46E-02	9.85E-04	3.28E-03	1.64E-03	1.96E-02	9.85E-04
September Max	15.5	9.21E-04	6.14E-04	1.53E-03	6.14E-04	2.00E-01	9.65E-01	9.21E-04	2.23E-02	9.21E-04	3.07E-03	1.53E-03	1.45E-02	9.21E-04
90th Percentile	25.3	9.89E-04	6.59E-04	1.65E-03	6.59E-04	2.12E-01	1.25E+00	1.02E-03	3.74E-02	9.89E-04	3.30E-03	2.67E-03	2.15E-02	9.89E-04
95th Percentile	46.4	1.01E-03	6.71E-04	1.68E-03	6.71E-04	2.38E-01	1.50E+00	1.67E-03	4.70E-02	1.01E-03	3.36E-03	3.60E-03	2.41E-02	1.01E-03
Comparison Limit	120	0.3	0.025	0.5	0.1	50	4	0.5	0.4	0.2	10	2	120	27
No. > Limit	0	0	0	0	0	0	0	0	0	0	0	0	0	0
MDL (µg)	2,300	3	2	5	2	4	20	3	1	3	10	5	5	15
No. < MDL	15	15	15	15	15	0	0	14	0	15	15	13	0	0

All non-detectable results (i.e., < MDL) are reported as ½ MDL and are denoted by italics and underlining.
N/A: Not applicable
----: Invalid sample (Invalid samples that were used in calculations are identified in bold)

APPENDIX A-2:

TOTAL DUSTFALL SAMPLING RESULTS

Tait Road Station Monitoring Results (concentrations expressed in g/m²/30 days)						
Month	**No. Exposure Days**	**Insoluble Dustfall**	**Soluble Dustfall**	**Total Dustfall**	**Fixed Dustfall**	**Volatile Dustfall**
October	31	0.63	0.60	1.20	0.96	0.24
November	30	0.42	0.69	1.08	0.54	0.54
December	31	0.42	0.69	1.08	0.54	0.54
			No. Valid Samples	3	-	-
			% Valid Data	100%	-	-
			Arithmetic Mean	1.12	0.68	0.44
			Max Monthly Concentration	1.20	0.96	0.54
			Min Monthly Concentration	1.08	0.54	0.24
			Comparison Limit	7	-	-
			No. > Limit	0	-	-
			MDL	0.3	-	-
			No. < MDL	0	-	-

Gallinger Road Station Monitoring Results (concentrations expressed in g/m²/30 days)						
Month	**No. Exposure Days**	**Insoluble Dustfall**	**Soluble Dustfall**	**Total Dustfall**	**Fixed Dustfall**	**Volatile Dustfall**
October	31	0.39	0.57	0.96	0.69	0.27
November	30	0.72	0.3	0.99	0.75	0.24
December	31	0.72	0.3	0.99	0.75	0.24
			No. Valid Samples	3	-	-
			% Valid Data	100%	-	-
			Arithmetic Mean	0.98	0.73	0.25
			Max Monthly Concentration	0.99	0.75	0.27
			Min Monthly Concentration	0.96	0.69	0.24
			Comparison Limit	7	-	-
			No. > Limit	0	-	-
			MDL	0.3	-	-
			No. < MDL	0	-	-

Northwest Station Monitoring Results (concentrations expressed in g/m²/30 days)						
Month	**No. Exposure Days**	**Insoluble Dustfall**	**Soluble Dustfall**	**Total Dustfall**	**Fixed Dustfall**	**Volatile Dustfall**
October	31	0.51	0.51	1.05	0.78	0.27
November	30	0.3	0.48	0.75	0.36	0.39
December	31	0.3	0.48	0.75	0.36	0.39
			No. Valid Samples	3	-	-
			% Valid Data	100%	-	-
			Arithmetic Mean	0.85	0.50	0.35
			Max Monthly Concentration	1.05	0.78	0.39
			Min Monthly Concentration	0.75	0.36	0.27
			Comparison Limit	7	-	-
			No. > Limit	0	-	-
			MDL	0.3	-	-
			No. < MDL	0	-	-

NOP1 Station Monitoring Results (concentrations expressed in g/m²/30 days)				
Month	**No. Exposure Days**	**Insoluble Dustfall**	**Soluble Dustfall**	**Total Dustfall**
October	31	3.63	1.74	5.37
November	30	5.91	1.41	7.35
December	31	8.58	0.57	9.15
			No. Valid Samples	3
			% Valid Data	100%
			Arithmetic Mean	7.29
			Max Monthly Concentration	9.15
			Min Monthly Concentration	5.37
			Comparison Limit	7
			No. > Limit	2
			MDL	0.3
			No. < MDL	0

WCP1 Station Monitoring Results (concentrations expressed in g/m^2/30 days)				
Month	**No. Exposure Days**	**Insoluble Dustfall**	**Soluble Dustfall**	**Total Dustfall**
October	31	0.87	0.72	1.59
November	30	0.99	0.81	1.8
December	31	3.06	0.3	3.36
			No. Valid Samples	3
			% Valid Data	100%
			Arithmetic Mean	2.25
			Max Monthly Concentration	3.4
			Min Monthly Concentration	1.8
			Comparison Limit	7
			No. > Limit	0
			MDL	0.3
			No. < MDL	0

GH1 Station Monitoring Results (concentrations expressed in g/m^2/30 days)				
Month	**No. Exposure Days**	**Insoluble Dustfall**	**Soluble Dustfall**	**Total Dustfall**
October	31	0.69	0.33	1.02
November	30	0.42	0.9	1.32
December	31	1.5	0.3	1.62
			No. Valid Samples	3
			% Valid Data	100%
			Arithmetic Mean	1.32
			Max Monthly Concentration	1.02
			Min Monthly Concentration	1.62
			Comparison Limit	7
			No. > Limit	0
			MDL	0.3
			No. < MDL	0

CP1 Station Monitoring Results (concentrations expressed in g/m^2/30 days)				
Month	**No. Exposure Days**	**Insoluble Dustfall**	**Soluble Dustfall**	**Total Dustfall**
October	31	0.33	0.36	0.57
November	30	0.54	1.41	1.95
December	31	2.46	0.3	2.76

No. Valid Samples	3
% Valid Data	100%
Arithmetic Mean	1.76
Max Monthly Concentration	2.76
Min Monthly Concentration	0.57
Comparison Limit	0
No. > Limit	2
MDL	0.3
No. < MDL	0

newgold Rainy River

SPP1 Station Monitoring Results (concentrations expressed in g/m^2/30 days)				
Month	**No. Exposure Days**	**Insoluble Dustfall**	**Soluble Dustfall**	**Total Dustfall**
13-Oct-21	7	0.57	1.29	1.86
20-Oct-21	7	1.38	2.85	4.23
27-Oct-21	7	1.29	4.08	4.53
3-Nov-21	7	1.29	1.29	2.34
10-Nov-21	7	4.95	3.39	8.34
17-Nov-21	7	1.29	2.07	1.8
24-Nov-21	7	1.38	3.75	5.1
1-Dec-21	7	1.41	3.3	4.71
8-Dec-21	7	189.9	9	198.6
15-Dec-21	7	25.77	2.88	28.65
22-Dec-21	7	18.6	7.38	25.98
29-Dec-21	7	5.1	1.29	5.58

No. Valid Samples	12
% Valid Data	100%
Arithmetic Mean	24.31
Max Concentration	198.6
Min Concentration	1.8
Comparison Limit	7
No. > Limit	4
MDL	1.29
No. < MDL	0

APPENDIX A-3:

DUSTFALL METALS SAMPLING RESULTS

newgold Rainy River

SPP1 Station Monitoring Results (concentrations expressed in g/m²/30 days)													
Metal	**13-Oct-21**	**20-Oct-21**	**27-Oct-21**	**3-Nov-21**	**10-Nov-21**	**17-Nov-21**	**24-Nov-21**	**1-Dec-21**	**8-Dec-21**	**15-Dec-21**	**22-Dec-21**	**29-Dec-21**	**Max**
Aluminum	1.36E-02	3.24E-02	7.08E-03	1.98E-02	2.16E-01	1.50E-03	4.62E-02	6.21E-02	2.33E+00	4.17E-01	4.26E-01	1.10E-01	2.33E+00
Antimony	*1.19E-05*	*1.65E-05*	*1.65E-05*	*2.25E-05*	*1.80E-05*	*1.95E-05*	*1.80E-05*	*1.80E-05*	7.17E-05	4.83E-05	*1.95E-05*	*1.50E-05*	7.17E-05
Arsenic	2.43E-05	1.65E-05	1.65E-05	2.25E-05	1.43E-04	9.90E-05	1.25E-04	9.15E-05	2.29E-03	9.69E-04	1.26E-04	9.00E-05	2.29E-03
Barium	1.72E-04	2.17E-04	5.16E-05	1.07E-04	1.14E-03	2.73E-05	2.67E-04	2.90E-04	1.73E-02	1.37E-03	1.45E-03	4.83E-04	1.73E-02
Beryllium	*5.85E-05*	*8.55E-05*	*8.25E-05*	*1.16E-04*	*8.85E-05*	*9.90E-05*	*8.85E-05*	*9.15E-05*	*6.00E-05*	*4.50E-05*	*9.90E-05*	*7.50E-05*	1.16E-04
Bismuth	*5.85E-05*	*8.55E-05*	*8.25E-05*	*1.16E-04*	*8.85E-05*	*9.90E-05*	*8.85E-05*	*9.15E-05*	*6.00E-05*	*4.50E-05*	*9.90E-05*	*7.50E-05*	1.16E-04
Boron	*1.19E-03*	*1.65E-03*	*1.65E-03*	*2.25E-03*	*1.80E-03*	*1.95E-03*	*1.80E-03*	*1.80E-03*	2.85E-03	*8.85E-04*	*1.95E-03*	*1.50E-03*	2.85E-03
Cadmium	*5.85E-06*	*8.55E-06*	*8.25E-06*	*1.16E-05*	*8.85E-06*	*9.90E-06*	*8.85E-06*	*9.15E-06*	2.25E-04	8.85E-05	*9.90E-06*	*7.50E-06*	2.25E-04
Calcium	*6.42E-02*	*9.03E-02*	*1.80E-02*	*4.32E-02*	*5.22E-01*	*1.11E-02*	*1.20E-01*	*1.06E-01*	*6.48E+00*	*4.65E-01*	*4.17E-01*	*1.07E-01*	6.48E+00
Chromium	*5.85E-05*	*8.55E-05*	*8.25E-05*	*1.16E-04*	*8.85E-05*	*9.90E-05*	*8.85E-05*	*9.15E-05*	3.93E-03	2.73E-04	2.19E-04	*7.50E-05*	3.93E-03
Cobalt	*1.19E-05*	*1.65E-05*	*1.65E-05*	*2.25E-05*	*1.80E-05*	*1.95E-05*	*1.80E-05*	*1.80E-05*	1.03E-03	9.48E-05	5.10E-05	*1.50E-05*	1.03E-03
Copper	*5.85E-05*	2.04E-04	*8.25E-05*	*1.16E-04*	2.33E-03	*9.90E-05*	8.91E-04	3.63E-04	6.39E-03	3.27E-03	6.99E-03	9.75E-04	6.99E-03
Iron	1.17E-02	2.64E-02	*4.95E-03*	1.53E-02	1.86E-01	*5.85E-03*	3.93E-02	5.37E-02	2.42E+00	4.47E-01	3.90E-01	8.76E-02	2.42E+00
Lead	3.69E-05	1.21E-04	*8.25E-06*	3.93E-05	4.23E-04	*9.90E-06*	2.60E-04	7.80E-05	4.02E-03	7.08E-04	1.50E-04	6.96E-05	4.02E-03
Lithium	*5.85E-04*	*8.55E-04*	*8.25E-04*	*1.16E-03*	*8.85E-04*	*9.90E-04*	*8.85E-04*	*9.15E-04*	*1.40E-03*	9.00E-04	*9.90E-04*	*7.50E-04*	1.40E-03
Magnesium	1.16E-02	1.98E-02	4.89E-03	1.15E-02	1.65E-01	*9.90E-04*	3.03E-02	3.36E-02	2.57E+00	2.13E-01	1.95E-01	3.69E-02	2.57E+00
Manganese	7.50E-04	1.93E-03	2.55E-04	7.47E-04	8.70E-03	5.70E-05	3.84E-03	2.17E-03	5.43E-02	1.53E-02	8.97E-03	2.05E-03	5.43E-02
Molybdenum	*5.85E-06*	*8.55E-06*	2.58E-05	*1.16E-05*	2.16E-05	*9.90E-06*	*8.85E-06*	*9.15E-06*	1.95E-04	1.80E-05	*9.90E-06*	*7.50E-06*	1.95E-04
Nickel	*5.85E-05*	*8.55E-05*	1.65E-04	*1.16E-04*	*8.85E-05*	*9.90E-05*	9.15E-04	*9.15E-05*	3.72E-03	2.52E-04	2.49E-04	*7.50E-05*	3.72E-03
Phosphorus	*5.85E-03*	*8.55E-03*	*8.25E-03*	*1.16E-02*	4.65E-02	*9.90E-03*	*8.85E-03*	*9.15E-03*	7.20E-02	1.02E-02	*9.90E-03*	*7.50E-03*	7.20E-02
Potassium	1.23E-02	*8.55E-03*	*8.25E-03*	*1.16E-02*	5.13E-01	*9.90E-03*	*8.85E-03*	*9.15E-03*	6.15E-01	8.85E-02	6.42E-02	2.91E-02	6.15E-01
Selenium	*1.19E-04*	*1.65E-04*	*1.65E-04*	*2.25E-04*	*1.80E-04*	*1.95E-04*	*1.80E-04*	*1.80E-04*	*1.20E-04*	1.77E-04	*1.95E-04*	*1.50E-04*	2.25E-04
Silicon	1.68E-02	3.66E-02	*8.25E-03*	*1.16E-02*	3.48E-01	*9.90E-03*	5.28E-02	7.38E-02	4.53E+00	4.89E-01	4.68E-01	1.40E-01	4.53E+00
Silver	*1.19E-06*	*1.65E-06*	*1.65E-06*	7.80E-06	1.92E-05	*1.95E-06*	5.04E-05	2.19E-05	1.55E-04	2.02E-05	3.45E-04	1.47E-05	3.45E-04
Sodium	*5.85E-03*	*8.55E-03*	*8.25E-03*	*1.16E-02*	3.09E-02	*9.90E-03*	*8.85E-03*	*9.15E-03*	1.43E-01	2.64E-02	4.26E-02	1.77E-02	1.43E-01
Strontium	1.36E-04	2.43E-04	4.50E-05	1.08E-04	1.12E-03	*1.95E-05*	2.58E-04	3.27E-04	8.70E-03	1.16E-03	1.54E-03	4.68E-04	8.70E-03
Thallium	*1.19E-05*	*1.65E-05*	*1.65E-05*	*2.25E-05*	*1.80E-05*	*1.95E-05*	*1.80E-05*	*1.80E-05*	3.12E-05	*8.85E-06*	*1.95E-05*	*1.50E-05*	3.12E-05
Tin	*1.19E-05*	*1.65E-05*	*1.65E-05*	*2.25E-05*	*1.80E-05*	*1.95E-05*	*1.80E-05*	*1.80E-05*	7.32E-05	*8.85E-06*	*1.95E-05*	*1.50E-05*	7.32E-05
Titanium	*1.19E-03*	*1.65E-03*	*1.65E-03*	*2.25E-03*	*1.80E-03*	*1.95E-03*	*1.80E-03*	*1.80E-03*	5.79E-02	4.98E-03	5.40E-03	*1.50E-03*	5.79E-02
Uranium	*1.19E-06*	*1.65E-06*	*1.65E-06*	*2.25E-06*	*1.80E-06*	*1.95E-06*	*1.80E-06*	*1.80E-06*	2.07E-04	5.55E-06	4.80E-06	*1.50E-06*	2.07E-04
Vanadium	*1.19E-04*	*1.65E-04*	*1.65E-04*	*2.25E-04*	3.90E-04	*1.95E-04*	*1.80E-04*	*1.80E-04*	6.84E-03	4.68E-04	6.90E-04	*1.50E-04*	6.84E-03
Zinc	*3.60E-04*	*5.10E-04*	*4.95E-04*	*6.90E-04*	3.81E-03	*5.85E-04*	2.46E-03	*5.40E-04*	5.10E-02	2.06E-02	3.90E-03	1.32E-03	5.10E-02

NOP1 Station Monitoring Results (concentrations expressed in g/m²/30 days)				
Metal	**October**	**November**	**December**	**Max**
Aluminum	5.67E-02	1.04E-01	1.37E-01	1.37E-01
Antimony	1.05E-05	1.44E-05	9.30E-06	1.44E-05
Arsenic	2.61E-05	6.15E-05	*1.50E-04*	1.50E-04
Barium	2.84E-04	3.81E-04	6.09E-04	6.09E-04
Beryllium	*2.40E-05*	*1.65E-05*	*1.13E-05*	2.40E-05
Bismuth	*2.40E-05*	*1.65E-05*	2.82E-05	2.82E-05
Boron	*4.80E-04*	*3.15E-04*	*2.25E-04*	4.80E-04
Cadmium	5.40E-06	1.23E-05	8.82E-06	1.23E-05
Calcium	1.09E-01	2.04E-01	1.85E-01	2.04E-01
Chromium	5.40E-05	1.59E-04	1.44E-04	1.59E-04
Cobalt	1.17E-05	2.52E-05	2.97E-05	2.97E-05
Copper	2.67E-04	7.08E-04	9.66E-04	9.66E-04
Iron	4.23E-02	7.53E-02	9.96E-02	9.96E-02
Lead	1.85E-04	1.91E-04	1.86E-04	1.91E-04
Lithium	*2.40E-04*	*1.65E-04*	*1.13E-04*	2.40E-04
Magnesium	2.90E-02	5.13E-02	5.64E-02	5.64E-02
Manganese	2.45E-03	4.35E-03	3.81E-03	4.35E-03
Molybdenum	8.70E-06	1.26E-05	1.66E-05	1.66E-05
Nickel	4.80E-05	2.07E-04	1.85E-04	2.07E-04
Phosphorus	*2.40E-03*	3.90E-03	2.79E-03	3.90E-03
Potassium	1.56E-02	2.16E-02	2.85E-02	2.85E-02
Selenium	*4.80E-05*	*3.15E-05*	2.25E-05	4.80E-05
Silicon	6.51E-02	1.33E-01	1.89E-01	1.89E-01
Silver	6.54E-06	1.51E-05	8.01E-06	1.51E-05
Sodium	9.90E-03	1.38E-02	1.53E-02	1.53E-02
Strontium	3.03E-04	5.22E-04	5.79E-04	5.79E-04
Thallium	*4.80E-06*	*3.15E-06*	*2.25E-06*	4.80E-06
Tin	*4.80E-06*	*3.15E-06*	9.90E-06	9.90E-06
Titanium	*4.80E-04*	1.92E-03	1.98E-03	1.98E-03
Uranium	*4.80E-07*	1.56E-06	1.80E-06	1.80E-06
Vanadium	*4.80E-05*	1.11E-04	1.47E-04	1.47E-04
Zinc	1.64E-03	2.97E-03	2.26E-03	2.97E-03

WCP1 Station Monitoring Results (concentrations expressed in g/m²/30 days)				
Metal	**October**	**November**	**December**	**Max**
Aluminum	4.89E-03	1.34E-02	4.74E-02	4.74E-02
Antimony	*6.90E-06*	3.75E-06	6.00E-06	6.90E-06
Arsenic	*6.90E-06*	1.80E-05	1.01E-04	1.01E-04
Barium	9.93E-05	8.64E-05	2.25E-04	2.25E-04
Beryllium	*3.45E-05*	1.80E-05	*1.28E-05*	3.45E-05
Bismuth	*3.45E-05*	1.80E-05	*1.28E-05*	3.45E-05
Boron	*6.90E-04*	3.75E-04	*2.55E-04*	6.90E-04
Cadmium	*3.45E-06*	1.80E-06	3.84E-06	3.84E-06
Calcium	2.82E-02	3.06E-02	6.75E-02	6.75E-02
Chromium	*3.45E-05*	1.80E-05	4.17E-05	4.17E-05
Cobalt	*6.90E-06*	3.75E-06	1.05E-05	1.05E-05
Copper	1.08E-04	1.35E-04	4.71E-04	4.71E-04
Iron	4.50E-03	1.07E-02	3.69E-02	3.69E-02
Lead	2.82E-05	2.40E-05	7.68E-05	7.68E-05
Lithium	6.90E-04	*1.80E-04*	*1.28E-04*	6.90E-04
Magnesium	6.18E-03	8.67E-03	2.08E-02	2.08E-02
Manganese	3.15E-04	6.51E-04	1.28E-03	1.28E-03
Molybdenum	6.90E-06	*1.80E-06*	*1.28E-06*	6.90E-06
Nickel	6.90E-05	*1.80E-05*	6.87E-05	6.90E-05
Phosphorus	6.90E-03	*1.80E-03*	1.28E-03	6.90E-03
Potassium	9.90E-03	3.90E-03	1.10E-02	1.10E-02
Selenium	1.38E-04	*3.75E-05*	*2.55E-05*	1.38E-04
Silicon	7.20E-03	1.80E-02	6.54E-02	6.54E-02
Silver	1.38E-06	*4.20E-07*	2.67E-06	2.67E-06
Sodium	6.90E-03	*2.40E-03*	7.59E-03	7.59E-03
Strontium	6.48E-05	7.47E-05	1.97E-04	1.97E-04
Thallium	1.38E-05	*3.75E-06*	*2.55E-06*	1.38E-05
Tin	1.38E-05	*3.75E-06*	6.30E-06	1.38E-05
Titanium	1.38E-03	*3.75E-04*	9.00E-04	1.38E-03
Uranium	1.38E-06	*3.75E-07*	8.70E-07	1.38E-06
Vanadium	1.38E-04	*3.75E-05*	7.50E-05	1.38E-04
Zinc	4.20E-04	*1.89E-04*	1.02E-03	1.02E-03

GH1 Station Monitoring Results (concentrations expressed in g/m²/30 days)				
Metal	**October**	**November**	**December**	**Max**
Aluminum	1.45E-02	2.43E-02	6.27E-02	6.27E-02
Antimony	*5.55E-06*	*3.75E-06*	*2.55E-06*	5.55E-06
Arsenic	1.29E-05	*2.25E-05*	1.25E-04	1.25E-04
Barium	*1.34E-04*	1.17E-04	2.66E-04	2.66E-04
Beryllium	*2.70E-05*	*1.95E-05*	*1.31E-05*	2.70E-05
Bismuth	*2.70E-05*	*1.95E-05*	6.27E-05	6.27E-05
Boron	*5.55E-04*	*3.75E-04*	*2.55E-04*	5.55E-04
Cadmium	*2.70E-06*	*1.95E-06*	4.65E-06	4.65E-06
Calcium	4.26E-02	4.68E-02	8.10E-02	8.10E-02
Chromium	*2.70E-05*	*1.95E-05*	6.45E-05	6.45E-05
Cobalt	*5.55E-06*	*3.75E-06*	1.59E-05	1.59E-05
Copper	7.50E-05	2.19E-04	4.92E-04	4.92E-04
Iron	1.05E-02	2.09E-02	5.22E-02	5.22E-02
Lead	2.61E-05	5.55E-05	8.46E-05	8.46E-05
Lithium	*2.70E-04*	*1.95E-04*	*1.31E-04*	2.70E-04
Magnesium	9.15E-03	1.39E-02	2.95E-02	2.95E-02
Manganese	6.27E-04	1.02E-03	1.56E-03	1.56E-03
Molybdenum	6.90E-06	*1.95E-06*	4.44E-06	6.90E-06
Nickel	*2.70E-05*	6.90E-05	8.34E-05	8.34E-05
Phosphorus	*2.70E-03*	*1.95E-03*	*1.31E-03*	2.70E-03
Potassium	1.20E-02	6.30E-03	1.41E-02	1.41E-02
Selenium	*5.55E-05*	*3.75E-05*	*2.55E-05*	5.55E-05
Silicon	1.98E-02	3.27E-02	8.22E-02	8.22E-02
Silver	*5.55E-07*	3.63E-06	7.44E-06	7.44E-06
Sodium	*2.70E-03*	6.30E-03	8.73E-03	8.73E-03
Strontium	1.09E-04	1.49E-04	2.35E-04	2.35E-04
Thallium	*5.55E-06*	*3.75E-06*	*2.55E-06*	5.55E-06
Tin	*5.55E-06*	*3.75E-06*	*2.55E-06*	5.55E-06
Titanium	*5.55E-04*	*3.75E-04*	9.00E-04	9.00E-04
Uranium	*5.55E-07*	*3.75E-07*	9.30E-07	9.30E-07
Vanadium	*5.55E-05*	*3.75E-05*	9.30E-05	9.30E-05
Zinc	3.90E-04	6.57E-04	1.33E-03	1.33E-03

CP1 Station Monitoring Results (concentrations expressed in g/m²/30 days)				
Metal	**October**	**November**	**December**	**Max**
Aluminum	1.50E-02	2.61E-02	*3.75E-02*	3.75E-02
Antimony	*5.70E-06*	*3.00E-06*	2.10E-06	5.70E-06
Arsenic	*5.70E-06*	*2.10E-05*	1.22E-04	1.22E-04
Barium	1.39E-04	1.21E-04	1.77E-04	1.77E-04
Beryllium	*2.85E-05*	*1.47E-05*	*1.08E-05*	2.85E-05
Bismuth	*2.85E-05*	*1.47E-05*	*1.08E-05*	2.85E-05
Boron	*5.70E-04*	*3.00E-04*	*2.10E-04*	5.70E-04
Cadmium	*2.85E-06*	*1.47E-06*	3.48E-06	3.48E-06
Calcium	4.77E-02	5.04E-02	4.50E-02	5.04E-02
Chromium	*2.85E-05*	4.35E-05	5.40E-05	5.40E-05
Cobalt	*5.70E-06*	8.70E-06	1.08E-05	1.08E-05
Copper	8.10E-05	1.23E-04	2.70E-04	2.70E-04
Iron	1.47E-02	2.45E-02	3.36E-02	3.36E-02
Lead	2.49E-05	5.34E-05	6.81E-05	6.81E-05
Lithium	*2.85E-04*	*1.47E-04*	*1.08E-04*	2.85E-04
Magnesium	1.14E-02	1.52E-02	1.79E-02	1.79E-02
Manganese	6.66E-04	9.78E-04	1.01E-03	1.01E-03
Molybdenum	*2.85E-06*	3.24E-06	3.93E-06	3.93E-06
Nickel	*2.85E-05*	5.64E-05	5.10E-05	5.64E-05
Phosphorus	*2.85E-03*	*1.47E-03*	*1.08E-03*	2.85E-03
Potassium	1.08E-02	6.63E-03	9.45E-03	1.08E-02
Selenium	*5.70E-05*	*3.00E-05*	*2.10E-05*	5.70E-05
Silicon	2.04E-02	3.63E-02	5.31E-02	5.31E-02
Silver	*5.70E-07*	1.26E-06	1.38E-06	1.38E-06
Sodium	*2.85E-03*	6.72E-03	6.69E-03	6.72E-03
Strontium	1.26E-04	1.51E-04	1.45E-04	1.51E-04
Thallium	*5.70E-06*	*3.00E-06*	*2.10E-06*	5.70E-06
Tin	*5.70E-06*	*3.00E-06*	*2.10E-06*	5.70E-06
Titanium	*5.70E-04*	*3.00E-04*	6.60E-04	6.60E-04
Uranium	*5.70E-07*	*3.00E-07*	5.70E-07	5.70E-07
Vanadium	*5.70E-05*	*3.00E-05*	6.60E-05	6.60E-05
Zinc	*1.65E-04*	4.89E-04	8.31E-04	8.31E-04

APPENDIX A-4:

SO_2 AND NO_2 PASSIVE SAMPLING RESULTS

Tait Road Station Monitoring Results (concentrations expressed in µg/m³)		
Month	**SO_2**	**NO_2**
October	0.52	2.82
November	0.52	1.50
December	0.79	1.69
No. Valid Samples	3	3
% Valid data	100%	100%
Arithmetic Mean	0.61	2.01
Max Monthly Concentration	0.70	2.82
Min Monthly Concentration	0.52	1.50
Comparison Limit	30	78
No. > Limit	0	0
MDL	0.26	0.19
No. < MDL	0	0

Gallinger Road Station Monitoring Results (concentrations expressed in µg/m³)		
Month	**SO_2**	**NO_2**
October	*0.52*	1.13
November	*0.52*	2.07
December	*0.52*	3.01
No. Valid Samples	3	3
% Valid data	100%	100%
Arithmetic Mean	*0.52*	2.07
Max Monthly Concentration	*0.52*	3.01
Min Monthly Concentration	*0.52*	1.13
Comparison Limit	30	78
No. > Limit	0	0
MDL	0.26	0.19
No. < MDL	0	0

APPENDIX B:
NOTICE OF EXCEEDANCES FOR Q4 2021

NOT APPLICABLE IN Q4 2021

APPENDIX C:
LABORATORY RESULTS

Your Project #: 2021/08/31 - 2021/10/01
Site Location: NEW GOLD - EMO, ON

Attention: Claire Kocharakkal

ALS Environmental
Burlington ON
1435 Norjohn Court
Unit 1
Burlington, ON
CANADA L7L 0E6

Report Date: 2021/10/18
Report #: R3085876
Version: 1 - Final

CERTIFICATE OF ANALYSIS

BV LABS JOB #: C176765
Received: 2021/10/08, 09:33

Sample Matrix: Air
Samples Received: 2

Analyses	Quantity	Date Extracted	Date Analyzed	Laboratory Method	Analytical Method
NO2 Passive Analysis	2	2021/10/13	2021/10/18	PTC SOP-00148	Passive NO2 in ATM
SO2 Passive Analysis	2	2021/10/14	2021/10/18	PTC SOP-00149	Passive SO2 in ATM

This report shall not be reproduced except in full, without the written approval of the laboratory.
Results relate only to the items tested.
* RPDs calculated using raw data. The rounding of final results may result in the apparent difference.

Encryption Key

Please direct all questions regarding this Certificate of Analysis to your Project Manager.
Customer Service Passives,
Email: PassiveAir@bureauveritas.com
Phone# (780) 378-8500
==========
BV Labs has procedures in place to guard against improper use of the electronic signature and have the required "signatories", as per ISO/IEC 17025, signing the reports. For Service Group specific validation please refer to the Validation Signature Page.

Bureau Veritas Laboratories Edmonton: 6744 - 50th Street T6B 3M9 Telephone (780) 378-8500 Fax (780) 378-8699

Bureau Veritas Job #: C176765
Report Date: 2021/10/18

ALS Environmental
Client Project #: 2021/08/31 - 2021/10/01
Site Location: NEW GOLD - EMO, ON
Sampler Initials: KH

RESULTS OF CHEMICAL ANALYSES OF AIR

Bureau Veritas ID		AHW149	AHW150		
Sampling Date		2021/08/31 00:00	2021/08/31 00:00		
	UNITS	**RRP SOUTH**	**RRP NORTH**	**RDL**	**QC Batch**
Passive Monitoring					
Calculated NO2	ppb	0.6	0.4	0.1	A385192
Calculated SO2	ppb	<0.1	<0.1	0.1	A386904
RDL = Reportable Detection Limit					

Bureau Veritas Laboratories Edmonton: 6744 - 50th Street T6B 3M9 Telephone (780) 378-8500 Fax (780) 378-8699

Bureau Veritas Job #: C176765
Report Date: 2021/10/18

ALS Environmental
Client Project #: 2021/08/31 - 2021/10/01
Site Location: NEW GOLD - EMO, ON
Sampler Initials: KH

GENERAL COMMENTS

Results relate only to the items tested.

Bureau Veritas Laboratories Edmonton: 6744 - 50th Street T6B 3M9 Telephone (780) 378-8500 Fax (780) 378-8699

Bureau Veritas Job #: C176765
Report Date: 2021/10/18

ALS Environmental
Client Project #: 2021/08/31 - 2021/10/01
Site Location: NEW GOLD - EMO, ON
Sampler Initials: KH

QUALITY ASSURANCE REPORT

QA/QC Batch	Init	QC Type	Parameter	Date Analyzed	Value	Recovery	UNITS	QC Limits
A385192	XSZ	Spiked Blank	Calculated NO2			106	%	90 - 110
A385192	XSZ	Method Blank	Calculated NO2		<0.1		ppb	
A386904	OZ	Spiked Blank	Calculated SO2			97	%	90 - 110
A386904	OZ	Method Blank	Calculated SO2		<0.1		ppb	

Spiked Blank: A blank matrix sample to which a known amount of the analyte, usually from a second source, has been added. Used to evaluate method accuracy.

Method Blank: A blank matrix containing all reagents used in the analytical procedure. Used to identify laboratory contamination.

Bureau Veritas Laboratories Edmonton: 6744 - 50th Street T6B 3M9 Telephone (780) 378-8500 Fax (780) 378-8699

Bureau Veritas Job #: C176765
Report Date: 2021/10/18

ALS Environmental
Client Project #: 2021/08/31 - 2021/10/01
Site Location: NEW GOLD - EMO, ON
Sampler Initials: KH

VALIDATION SIGNATURE PAGE

The analytical data and all QC contained in this report were reviewed and validated by:

Yang Liu

Yang Liu, Analyst II

BV Labs has procedures in place to guard against improper use of the electronic signature and have the required "signatories", as per ISO/IEC 17025, signing the reports.
For Service Group specific validation please refer to the Validation Signature Page.

Bureau Veritas Laboratories Edmonton: 6744 - 50th Street T6B 3M9 Telephone (780) 378-8500 Fax (780) 378-8699

Your P.O. #: 4500022601
Your Project #: TC111504.2015.6
Site#: 2019/10/01 - 2019/10/29
Site Location: NEW GOLD - EMO, ON

Attention: Claire Kocharakkal

ALS Environmental
Burlington ON
1435 Norjohn Court
Unit 1
Burlington, ON
CANADA L7L 0E6

Report Date: 2021/12/08
Report #: R3105088
Version: 1 - Final

CERTIFICATE OF ANALYSIS

BV LABS JOB #: C187194
Received: 2021/11/08, 10:30

Sample Matrix: Air
Samples Received: 2

Analyses	Quantity	Date Extracted	Date Analyzed	Laboratory Method	Analytical Method
NO2 Passive Analysis	2	2021/11/15	2021/11/20	PTC SOP-00148	Passive NO2 in ATM
SO2 Passive Analysis	2	2021/11/15	2021/11/20	PTC SOP-00149	Passive SO2 in ATM

This report shall not be reproduced except in full, without the written approval of the laboratory.
Results relate only to the items tested.
* RPDs calculated using raw data. The rounding of final results may result in the apparent difference.

Encryption Key

Please direct all questions regarding this Certificate of Analysis to your Project Manager.
Customer Service Passives,
Email: PassiveAir@bureauveritas.com
Phone# (780) 378-8500
==========
BV Labs has procedures in place to guard against improper use of the electronic signature and have the required "signatories", as per ISO/IEC 17025, signing the reports. For Service Group specific validation please refer to the Validation Signature Page.

Bureau Veritas Laboratories Edmonton: 6744 - 50th Street T6B 3M9 Telephone (780) 378-8500 Fax (780) 378-8699

Bureau Veritas Job #: C187194
Report Date: 2021/12/08

ALS Environmental
Client Project #: TC111504.2015.6
Site Location: NEW GOLD - EMO, ON
Your P.O. #: 4500022601
Sampler Initials: KH

RESULTS OF CHEMICAL ANALYSES OF AIR

Bureau Veritas ID		AKL180	AKL181		
Sampling Date		2021/10/01 00:00	2021/10/01 00:00		
	UNITS	**RRP SOUTH**	**RRP NORTH**	**RDL**	**QC Batch**
Passive Monitoring					
Calculated NO2	ppb	1.5	0.6	0.1	A425239
Calculated SO2	ppb	0.2	0.2	0.1	A426099
RDL = Reportable Detection Limit					

Bureau Veritas Laboratories Edmonton: 6744 - 50th Street T6B 3M9 Telephone (780) 378-8500 Fax (780) 378-8699

Bureau Veritas Job #: C187194
Report Date: 2021/12/08

ALS Environmental
Client Project #: TC111504.2015.6
Site Location: NEW GOLD - EMO, ON
Your P.O. #: 4500022601
Sampler Initials: KH

GENERAL COMMENTS

Results relate only to the items tested.

Bureau Veritas Laboratories Edmonton: 6744 - 50th Street T6B 3M9 Telephone (780) 378-8500 Fax (780) 378-8699

Bureau Veritas Job #: C187194
Report Date: 2021/12/08

ALS Environmental
Client Project #: TC111504.2015.6
Site Location: NEW GOLD - EMO, ON
Your P.O. #: 4500022601
Sampler Initials: KH

QUALITY ASSURANCE REPORT

QA/QC Batch	Init	QC Type	Parameter	Date Analyzed	Value	Recovery	UNITS	QC Limits
A425239	XSZ	Spiked Blank	Calculated NO2			101	%	90 - 110
A425239	XSZ	Method Blank	Calculated NO2		<0.1		ppb	
A426099	OZ	Spiked Blank	Calculated SO2			102	%	90 - 110
A426099	OZ	Method Blank	Calculated SO2		<0.1		ppb	

Spiked Blank: A blank matrix sample to which a known amount of the analyte, usually from a second source, has been added. Used to evaluate method accuracy.

Method Blank: A blank matrix containing all reagents used in the analytical procedure. Used to identify laboratory contamination.

Bureau Veritas Laboratories Edmonton: 6744 - 50th Street T6B 3M9 Telephone (780) 378-8500 Fax (780) 378-8699

Bureau Veritas Job #: C187194
Report Date: 2021/12/08

ALS Environmental
Client Project #: TC111504.2015.6
Site Location: NEW GOLD - EMO, ON
Your P.O. #: 4500022601
Sampler Initials: KH

VALIDATION SIGNATURE PAGE

The analytical data and all QC contained in this report were reviewed and validated by:

Carmen Toker, CT, Manager Air Laboratory Services

BV Labs has procedures in place to guard against improper use of the electronic signature and have the required "signatories", as per ISO/IEC 17025, signing the reports.
For Service Group specific validation please refer to the Validation Signature Page.

Bureau Veritas Laboratories Edmonton: 6744 - 50th Street T6B 3M9 Telephone (780) 378-8500 Fax (780) 378-8699

Your P.O. #: 4500022601
Your Project #: TC111504.2015.6
Site#: 2019/10/29 - 2021/12/01
Site Location: NEW GOLD - EMO, ON

Attention: Claire Kocharakkal

ALS Environmental
Burlington ON
1435 Norjohn Court
Unit 1
Burlington, ON
CANADA L7L 0E6

Report Date: 2021/12/17
Report #: R3110135
Version: 1 - Final

CERTIFICATE OF ANALYSIS

BV LABS JOB #: C192373
Received: 2021/12/10, 15:04

Sample Matrix: Air
Samples Received: 2

Analyses	Quantity	Date Extracted	Date Analyzed	Laboratory Method	Analytical Method
NO2 Passive Analysis	2	2021/12/15	2021/12/17	PTC SOP-00148	Passive NO2 in ATM
SO2 Passive Analysis	2	2021/12/16	2021/12/17	PTC SOP-00149	Passive SO2 in ATM

This report shall not be reproduced except in full, without the written approval of the laboratory.
Results relate only to the items tested.
* RPDs calculated using raw data. The rounding of final results may result in the apparent difference.

Encryption Key

Please direct all questions regarding this Certificate of Analysis to your Project Manager.
Customer Service Passives,
Email: PassiveAir@bureauveritas.com
Phone# (780) 378-8500
==========
BV Labs has procedures in place to guard against improper use of the electronic signature and have the required "signatories", as per ISO/IEC 17025, signing the reports. For Service Group specific validation please refer to the Validation Signature Page.

Bureau Veritas Laboratories Edmonton: 6744 - 50th Street T6B 3M9 Telephone (780) 378-8500 Fax (780) 378-8699

Bureau Veritas Job #: C192373
Report Date: 2021/12/17

ALS Environmental
Client Project #: TC111504.2015.6
Site Location: NEW GOLD - EMO, ON
Your P.O. #: 4500022601
Sampler Initials: SF

RESULTS OF CHEMICAL ANALYSES OF AIR

Bureau Veritas ID		ALO358	ALO359		
Sampling Date		2021/10/29	2021/10/29		
	UNITS	**RRP SOUTH**	**RRP NORTH**	**RDL**	**QC Batch**
Passive Monitoring					
Calculated NO2	ppb	0.8	1.1	0.1	A444416
Calculated SO2	ppb	0.2	0.2	0.1	A447205
RDL = Reportable Detection Limit					

Bureau Veritas Laboratories Edmonton: 6744 - 50th Street T6B 3M9 Telephone (780) 378-8500 Fax (780) 378-8699

Bureau Veritas Job #: C192373
Report Date: 2021/12/17

ALS Environmental
Client Project #: TC111504.2015.6
Site Location: NEW GOLD - EMO, ON
Your P.O. #: 4500022601
Sampler Initials: SF

GENERAL COMMENTS

Results relate only to the items tested.

Bureau Veritas Laboratories Edmonton: 6744 - 50th Street T6B 3M9 Telephone (780) 378-8500 Fax (780) 378-8699

Bureau Veritas Job #: C192373
Report Date: 2021/12/17

ALS Environmental
Client Project #: TC111504.2015.6
Site Location: NEW GOLD - EMO, ON
Your P.O. #: 4500022601
Sampler Initials: SF

QUALITY ASSURANCE REPORT

QA/QC Batch	Init	QC Type	Parameter	Date Analyzed	Value	Recovery	UNITS	QC Limits
A444416	XSZ	Spiked Blank	Calculated NO2			98	%	90 - 110
A444416	XSZ	Method Blank	Calculated NO2		<0.1		ppb	
A447205	OZ	Spiked Blank	Calculated SO2			100	%	90 - 110
A447205	OZ	Method Blank	Calculated SO2		<0.1		ppb	

Spiked Blank: A blank matrix sample to which a known amount of the analyte, usually from a second source, has been added. Used to evaluate method accuracy.

Method Blank: A blank matrix containing all reagents used in the analytical procedure. Used to identify laboratory contamination.

Bureau Veritas Laboratories Edmonton: 6744 - 50th Street T6B 3M9 Telephone (780) 378-8500 Fax (780) 378-8699

Bureau Veritas Job #: C192373
Report Date: 2021/12/17

ALS Environmental
Client Project #: TC111504.2015.6
Site Location: NEW GOLD - EMO, ON
Your P.O. #: 4500022601
Sampler Initials: SF

VALIDATION SIGNATURE PAGE

The analytical data and all QC contained in this report were reviewed and validated by:

Yang Liu

Yang Liu, Analyst II

BV Labs has procedures in place to guard against improper use of the electronic signature and have the required "signatories", as per ISO/IEC 17025, signing the reports.
For Service Group specific validation please refer to the Validation Signature Page.

Bureau Veritas Laboratories Edmonton: 6744 - 50th Street T6B 3M9 Telephone (780) 378-8500 Fax (780) 378-8699

Your P.O. #: 4500022601
Your Project #: TC111504.2015.6
Site#: 2021/12/01 - 2022/01/04
Site Location: NEW GOLD - EMO, ON

Attention: Claire Kocharakkal

ALS Environmental
Burlington ON
1435 Norjohn Court
Unit 1
Burlington, ON
CANADA L7L 0E6

Report Date: 2022/01/17
Report #: R3122804
Version: 1 - Final

CERTIFICATE OF ANALYSIS

BV LABS JOB #: C201449
Received: 2022/01/10, 08:30

Sample Matrix: Air
Samples Received: 2

Analyses	Quantity	Date Extracted	Date Analyzed	Laboratory Method	Analytical Method
NO2 Passive Analysis	2	2022/01/12	2022/01/17	PTC SOP-00148	Passive NO2 in ATM
SO2 Passive Analysis	2	2022/01/12	2022/01/17	PTC SOP-00149	Passive SO2 in ATM

This report shall not be reproduced except in full, without the written approval of the laboratory.
Results relate only to the items tested.
* RPDs calculated using raw data. The rounding of final results may result in the apparent difference.

Encryption Key

Please direct all questions regarding this Certificate of Analysis to your Project Manager.
Customer Service Passives,
Email: PassiveAir@bureauveritas.com
Phone# (780) 378-8500
==========
BV Labs has procedures in place to guard against improper use of the electronic signature and have the required "signatories", as per ISO/IEC 17025, signing the reports. For Service Group specific validation please refer to the Validation Signature Page.

Bureau Veritas Laboratories Edmonton: 6744 - 50th Street T6B 3M9 Telephone (780) 378-8500 Fax (780) 378-8699

Bureau Veritas Job #: C201449
Report Date: 2022/01/17

ALS Environmental
Client Project #: TC111504.2015.6
Site Location: NEW GOLD - EMO, ON
Your P.O. #: 4500022601
Sampler Initials: SF

RESULTS OF CHEMICAL ANALYSES OF AIR

Bureau Veritas ID		AMW216	AMW217		
Sampling Date		2021/12/01 00:00	2021/12/01 00:00		
	UNITS	**RRP SOUTH**	**RRP NORTH**	**RDL**	**QC Batch**
Passive Monitoring					
Calculated NO2	ppb	0.9	1.6	0.1	A468041
Calculated SO2	ppb	0.3	0.2	0.1	A469324
RDL = Reportable Detection Limit					

Bureau Veritas Laboratories Edmonton: 6744 - 50th Street T6B 3M9 Telephone (780) 378-8500 Fax (780) 378-8699

Bureau Veritas Job #: C201449
Report Date: 2022/01/17

ALS Environmental
Client Project #: TC111504.2015.6
Site Location: NEW GOLD - EMO, ON
Your P.O. #: 4500022601
Sampler Initials: SF

GENERAL COMMENTS

Results relate only to the items tested.

Bureau Veritas Laboratories Edmonton: 6744 - 50th Street T6B 3M9 Telephone (780) 378-8500 Fax (780) 378-8699

Bureau Veritas Job #: C201449
Report Date: 2022/01/17

ALS Environmental
Client Project #: TC111504.2015.6
Site Location: NEW GOLD - EMO, ON
Your P.O. #: 4500022601
Sampler Initials: SF

QUALITY ASSURANCE REPORT

QA/QC Batch	Init	QC Type	Parameter	Date Analyzed	Value	Recovery	UNITS	QC Limits
A468041	XSZ	Spiked Blank	Calculated NO2			95	%	90 - 110
A468041	XSZ	Method Blank	Calculated NO2		<0.1		ppb	
A469324	SS6	Spiked Blank	Calculated SO2			99	%	90 - 110
A469324	SS6	Method Blank	Calculated SO2				ppb	

Spiked Blank: A blank matrix sample to which a known amount of the analyte, usually from a second source, has been added. Used to evaluate method accuracy.

Method Blank: A blank matrix containing all reagents used in the analytical procedure. Used to identify laboratory contamination.

Bureau Veritas Laboratories Edmonton: 6744 - 50th Street T6B 3M9 Telephone (780) 378-8500 Fax (780) 378-8699

Bureau Veritas Job #: C201449
Report Date: 2022/01/17

ALS Environmental
Client Project #: TC111504.2015.6
Site Location: NEW GOLD - EMO, ON
Your P.O. #: 4500022601
Sampler Initials: SF

VALIDATION SIGNATURE PAGE

The analytical data and all QC contained in this report were reviewed and validated by:

Yang Liu

Yang Liu, Analyst II

BV Labs has procedures in place to guard against improper use of the electronic signature and have the required "signatories", as per ISO/IEC 17025, signing the reports.
For Service Group specific validation please refer to the Validation Signature Page.

Bureau Veritas Laboratories Edmonton: 6744 - 50th Street T6B 3M9 Telephone (780) 378-8500 Fax (780) 378-8699

New Gold Inc. Rainy River Project
ATTN: Sarah Flesher
5967 Highway 11/71
P.O. Box 5
Emo ON P0W 1E0

Date Received: 08-NOV-21
Report Date: 03-DEC-21 09:22 (MT)
Version: FINAL

Client Phone: 807-234-8200

Certificate of Analysis

Lab Work Order #: L2660517
Project P.O. #: 4500050093
Job Reference:
C of C Numbers:
Legal Site Desc:

Claire Kocharakkal, B.Sc.
Account Manager

[This report shall not be reproduced except in full without the written authority of the Laboratory.]

ALS ENVIRONMENTAL ANALYTICAL REPORT

Sample Details/Parameters	Result	Qualifier*	D.L.	Units	Extracted	Analyzed	Batch
L2660517-1 SOUTH-TSP-386							
Sampled By: Client on 01-OCT-21							
Matrix: Hi Vol Filter							
Miscellaneous Parameters							
Total particulate	61500		2300	ug		22-NOV-21	R5656955
Metals on High Volume Filter by ICPMS							
Arsenic (As)	<3.0		3.0	ug	23-NOV-21	25-NOV-21	R5658124
Cadmium (Cd)	<2.0		2.0	ug	23-NOV-21	25-NOV-21	R5658124
Cobalt (Co)	<2.0		2.0	ug	23-NOV-21	25-NOV-21	R5658124
Chromium (Cr)	<5.0		5.0	ug	23-NOV-21	25-NOV-21	R5658124
Copper (Cu)	90.9		4.0	ug	23-NOV-21	25-NOV-21	R5658124
Iron (Fe)	783		20	ug	23-NOV-21	25-NOV-21	R5658124
Manganese (Mn)	26.4		1.0	ug	23-NOV-21	25-NOV-21	R5658124
Nickel (Ni)	<3.0		3.0	ug	23-NOV-21	25-NOV-21	R5658124
Lead (Pb)	<3.0		3.0	ug	23-NOV-21	25-NOV-21	R5658124
Selenium (Se)	<10		10	ug	23-NOV-21	25-NOV-21	R5658124
Vanadium (V)	<5.0		5.0	ug	23-NOV-21	25-NOV-21	R5658124
Zinc (Zn)	29.7		5.0	ug	23-NOV-21	25-NOV-21	R5658124
L2660517-2 SOUTH-TSP-387							
Sampled By: Client on 07-OCT-21							
Matrix: Hi Vol Filter							
Miscellaneous Parameters							
Total particulate	27100		2300	ug		22-NOV-21	R5656955
Metals on High Volume Filter by ICPMS							
Arsenic (As)	<3.0		3.0	ug	23-NOV-21	25-NOV-21	R5658124
Cadmium (Cd)	<2.0		2.0	ug	23-NOV-21	25-NOV-21	R5658124
Cobalt (Co)	<2.0		2.0	ug	23-NOV-21	25-NOV-21	R5658124
Chromium (Cr)	<5.0		5.0	ug	23-NOV-21	25-NOV-21	R5658124
Copper (Cu)	51.3		4.0	ug	23-NOV-21	25-NOV-21	R5658124
Iron (Fe)	439		20	ug	23-NOV-21	25-NOV-21	R5658124
Manganese (Mn)	11.5		1.0	ug	23-NOV-21	25-NOV-21	R5658124
Nickel (Ni)	<3.0		3.0	ug	23-NOV-21	25-NOV-21	R5658124
Lead (Pb)	<3.0		3.0	ug	23-NOV-21	25-NOV-21	R5658124
Selenium (Se)	<10		10	ug	23-NOV-21	25-NOV-21	R5658124
Vanadium (V)	<5.0		5.0	ug	23-NOV-21	25-NOV-21	R5658124
Zinc (Zn)	14.9		5.0	ug	23-NOV-21	25-NOV-21	R5658124
L2660517-3 SOUTH-TSP-388							
Sampled By: Client on 13-OCT-21							
Matrix: Hi Vol Filter							
Miscellaneous Parameters							
Total particulate	17800		2300	ug		22-NOV-21	R5656955
Metals on High Volume Filter by ICPMS							
Arsenic (As)	<3.0		3.0	ug	23-NOV-21	25-NOV-21	R5658124
Cadmium (Cd)	<2.0		2.0	ug	23-NOV-21	25-NOV-21	R5658124
Cobalt (Co)	<2.0		2.0	ug	23-NOV-21	25-NOV-21	R5658124
Chromium (Cr)	<5.0		5.0	ug	23-NOV-21	25-NOV-21	R5658124
Copper (Cu)	42.1		4.0	ug	23-NOV-21	25-NOV-21	R5658124
Iron (Fe)	323		20	ug	23-NOV-21	25-NOV-21	R5658124
Manganese (Mn)	10.5		1.0	ug	23-NOV-21	25-NOV-21	R5658124
Nickel (Ni)	<3.0		3.0	ug	23-NOV-21	25-NOV-21	R5658124
Lead (Pb)	<3.0		3.0	ug	23-NOV-21	25-NOV-21	R5658124
Selenium (Se)	<10		10	ug	23-NOV-21	25-NOV-21	R5658124
Vanadium (V)	<5.0		5.0	ug	23-NOV-21	25-NOV-21	R5658124
Zinc (Zn)	10.6		5.0	ug	23-NOV-21	25-NOV-21	R5658124

* Refer to Referenced Information for Qualifiers (if any) and Methodology.

ALS ENVIRONMENTAL ANALYTICAL REPORT

Sample Details/Parameters	Result	Qualifier*	D.L.	Units	Extracted	Analyzed	Batch
L2660517-4 SOUTH-TSP-389							
Sampled By: Client on 19-OCT-21							
Matrix: Hi Vol Filter							
Miscellaneous Parameters							
Total particulate	49400		2300	ug		22-NOV-21	R5656955
Metals on High Volume Filter by ICPMS							
Arsenic (As)	<3.0		3.0	ug	23-NOV-21	25-NOV-21	R5658124
Cadmium (Cd)	<2.0		2.0	ug	23-NOV-21	25-NOV-21	R5658124
Cobalt (Co)	<2.0		2.0	ug	23-NOV-21	25-NOV-21	R5658124
Chromium (Cr)	<5.0		5.0	ug	23-NOV-21	25-NOV-21	R5658124
Copper (Cu)	42.3		4.0	ug	23-NOV-21	25-NOV-21	R5658124
Iron (Fe)	923		20	ug	23-NOV-21	25-NOV-21	R5658124
Manganese (Mn)	41.3		1.0	ug	23-NOV-21	25-NOV-21	R5658124
Nickel (Ni)	<3.0		3.0	ug	23-NOV-21	25-NOV-21	R5658124
Lead (Pb)	<3.0		3.0	ug	23-NOV-21	25-NOV-21	R5658124
Selenium (Se)	<10		10	ug	23-NOV-21	25-NOV-21	R5658124
Vanadium (V)	<5.0		5.0	ug	23-NOV-21	25-NOV-21	R5658124
Zinc (Zn)	15.6		5.0	ug	23-NOV-21	25-NOV-21	R5658124
L2660517-5 SOUTH-TSP-390							
Sampled By: Client on 25-OCT-21							
Matrix: Hi Vol Filter							
Miscellaneous Parameters							
Total particulate	11300		2300	ug		22-NOV-21	R5656955
Metals on High Volume Filter by ICPMS							
Arsenic (As)	<3.0		3.0	ug	23-NOV-21	25-NOV-21	R5658124
Cadmium (Cd)	<2.0		2.0	ug	23-NOV-21	25-NOV-21	R5658124
Cobalt (Co)	<2.0		2.0	ug	23-NOV-21	25-NOV-21	R5658124
Chromium (Cr)	<5.0		5.0	ug	23-NOV-21	25-NOV-21	R5658124
Copper (Cu)	31.4		4.0	ug	23-NOV-21	25-NOV-21	R5658124
Iron (Fe)	298		20	ug	23-NOV-21	25-NOV-21	R5658124
Manganese (Mn)	5.4		1.0	ug	23-NOV-21	25-NOV-21	R5658124
Nickel (Ni)	<3.0		3.0	ug	23-NOV-21	25-NOV-21	R5658124
Lead (Pb)	<3.0		3.0	ug	23-NOV-21	25-NOV-21	R5658124
Selenium (Se)	<10		10	ug	23-NOV-21	25-NOV-21	R5658124
Vanadium (V)	<5.0		5.0	ug	23-NOV-21	25-NOV-21	R5658124
Zinc (Zn)	7.0		5.0	ug	23-NOV-21	25-NOV-21	R5658124
L2660517-6 NORTH-TSP-386							
Sampled By: Client on 01-OCT-21							
Matrix: Hi Vol Filter							
Miscellaneous Parameters							
Total particulate	43600		2300	ug		22-NOV-21	R5656955
Metals on High Volume Filter by ICPMS							
Arsenic (As)	<3.0		3.0	ug	23-NOV-21	25-NOV-21	R5658124
Cadmium (Cd)	<2.0		2.0	ug	23-NOV-21	25-NOV-21	R5658124
Cobalt (Co)	<2.0		2.0	ug	23-NOV-21	25-NOV-21	R5658124
Chromium (Cr)	<5.0		5.0	ug	23-NOV-21	25-NOV-21	R5658124
Copper (Cu)	53.1		4.0	ug	23-NOV-21	25-NOV-21	R5658124
Iron (Fe)	220		20	ug	23-NOV-21	25-NOV-21	R5658124
Manganese (Mn)	9.7		1.0	ug	23-NOV-21	25-NOV-21	R5658124
Nickel (Ni)	<3.0		3.0	ug	23-NOV-21	25-NOV-21	R5658124
Lead (Pb)	<3.0		3.0	ug	23-NOV-21	25-NOV-21	R5658124
Selenium (Se)	<10		10	ug	23-NOV-21	25-NOV-21	R5658124
Vanadium (V)	<5.0		5.0	ug	23-NOV-21	25-NOV-21	R5658124
Zinc (Zn)	11.1		5.0	ug	23-NOV-21	25-NOV-21	R5658124

* Refer to Referenced Information for Qualifiers (if any) and Methodology.

ALS ENVIRONMENTAL ANALYTICAL REPORT

Sample Details/Parameters	Result	Qualifier*	D.L.	Units	Extracted	Analyzed	Batch
L2660517-7 NORTH-TSP-387							
Sampled By: Client on 07-OCT-21							
Matrix: Hi Vol Filter							
Miscellaneous Parameters							
Total particulate	28600		2300	ug		22-NOV-21	R5656955
Metals on High Volume Filter by ICPMS							
Arsenic (As)	<3.0		3.0	ug	23-NOV-21	25-NOV-21	R5658124
Cadmium (Cd)	<2.0		2.0	ug	23-NOV-21	25-NOV-21	R5658124
Cobalt (Co)	<2.0		2.0	ug	23-NOV-21	25-NOV-21	R5658124
Chromium (Cr)	<5.0		5.0	ug	23-NOV-21	25-NOV-21	R5658124
Copper (Cu)	53.1		4.0	ug	23-NOV-21	25-NOV-21	R5658124
Iron (Fe)	419		20	ug	23-NOV-21	25-NOV-21	R5658124
Manganese (Mn)	11.7		1.0	ug	23-NOV-21	25-NOV-21	R5658124
Nickel (Ni)	<3.0		3.0	ug	23-NOV-21	25-NOV-21	R5658124
Lead (Pb)	<3.0		3.0	ug	23-NOV-21	25-NOV-21	R5658124
Selenium (Se)	<10		10	ug	23-NOV-21	25-NOV-21	R5658124
Vanadium (V)	<5.0		5.0	ug	23-NOV-21	25-NOV-21	R5658124
Zinc (Zn)	11.2		5.0	ug	23-NOV-21	25-NOV-21	R5658124
L2660517-8 NORTH-TSP-388							
Sampled By: Client on 13-OCT-21							
Matrix: Hi Vol Filter							
Miscellaneous Parameters							
Total particulate	8800		2300	ug		22-NOV-21	R5656955
Metals on High Volume Filter by ICPMS							
Arsenic (As)	<3.0		3.0	ug	23-NOV-21	25-NOV-21	R5658124
Cadmium (Cd)	<2.0		2.0	ug	23-NOV-21	25-NOV-21	R5658124
Cobalt (Co)	<2.0		2.0	ug	23-NOV-21	25-NOV-21	R5658124
Chromium (Cr)	<5.0		5.0	ug	23-NOV-21	25-NOV-21	R5658124
Copper (Cu)	32.2		4.0	ug	23-NOV-21	25-NOV-21	R5658124
Iron (Fe)	112		20	ug	23-NOV-21	25-NOV-21	R5658124
Manganese (Mn)	4.0		1.0	ug	23-NOV-21	25-NOV-21	R5658124
Nickel (Ni)	<3.0		3.0	ug	23-NOV-21	25-NOV-21	R5658124
Lead (Pb)	<3.0		3.0	ug	23-NOV-21	25-NOV-21	R5658124
Selenium (Se)	<10		10	ug	23-NOV-21	25-NOV-21	R5658124
Vanadium (V)	<5.0		5.0	ug	23-NOV-21	25-NOV-21	R5658124
Zinc (Zn)	7.7		5.0	ug	23-NOV-21	25-NOV-21	R5658124
L2660517-9 NORTH-TSP-389							
Sampled By: Client on 19-OCT-21							
Matrix: Hi Vol Filter							
Miscellaneous Parameters							
Total particulate	40300		2300	ug		22-NOV-21	R5656955
Metals on High Volume Filter by ICPMS							
Arsenic (As)	<3.0		3.0	ug	23-NOV-21	25-NOV-21	R5658124
Cadmium (Cd)	<2.0		2.0	ug	23-NOV-21	25-NOV-21	R5658124
Cobalt (Co)	<2.0		2.0	ug	23-NOV-21	25-NOV-21	R5658124
Chromium (Cr)	<5.0		5.0	ug	23-NOV-21	25-NOV-21	R5658124
Copper (Cu)	68.4		4.0	ug	23-NOV-21	25-NOV-21	R5658124
Iron (Fe)	738		20	ug	23-NOV-21	25-NOV-21	R5658124
Manganese (Mn)	38.7		1.0	ug	23-NOV-21	25-NOV-21	R5658124
Nickel (Ni)	<3.0		3.0	ug	23-NOV-21	25-NOV-21	R5658124
Lead (Pb)	<3.0		3.0	ug	23-NOV-21	25-NOV-21	R5658124
Selenium (Se)	<10		10	ug	23-NOV-21	25-NOV-21	R5658124
Vanadium (V)	<5.0		5.0	ug	23-NOV-21	25-NOV-21	R5658124
Zinc (Zn)	15.2		5.0	ug	23-NOV-21	25-NOV-21	R5658124

* Refer to Referenced Information for Qualifiers (if any) and Methodology.

ALS ENVIRONMENTAL ANALYTICAL REPORT

Sample Details/Parameters	Result	Qualifier*	D.L.	Units	Extracted	Analyzed	Batch
L2660517-10 NORTH-TSP-390							
Sampled By: Client on 25-OCT-21							
Matrix: Hi Vol Filter							
Miscellaneous Parameters							
Total particulate	8000		2300	ug		22-NOV-21	R5656955
Metals on High Volume Filter by ICPMS							
Arsenic (As)	<3.0		3.0	ug	23-NOV-21	25-NOV-21	R5658124
Cadmium (Cd)	<2.0		2.0	ug	23-NOV-21	25-NOV-21	R5658124
Cobalt (Co)	<2.0		2.0	ug	23-NOV-21	25-NOV-21	R5658124
Chromium (Cr)	<5.0		5.0	ug	23-NOV-21	25-NOV-21	R5658124
Copper (Cu)	32.8		4.0	ug	23-NOV-21	25-NOV-21	R5658124
Iron (Fe)	198		20	ug	23-NOV-21	25-NOV-21	R5658124
Manganese (Mn)	3.6		1.0	ug	23-NOV-21	25-NOV-21	R5658124
Nickel (Ni)	<3.0		3.0	ug	23-NOV-21	25-NOV-21	R5658124
Lead (Pb)	<3.0		3.0	ug	23-NOV-21	25-NOV-21	R5658124
Selenium (Se)	<10		10	ug	23-NOV-21	25-NOV-21	R5658124
Vanadium (V)	<5.0		5.0	ug	23-NOV-21	25-NOV-21	R5658124
Zinc (Zn)	5.7		5.0	ug	23-NOV-21	25-NOV-21	R5658124
L2660517-11 NORTHWEST-TSP-386							
Sampled By: Client on 01-OCT-21							
Matrix: Hi Vol Filter							
Miscellaneous Parameters							
Total particulate	46900		2300	ug		22-NOV-21	R5656955
Metals on High Volume Filter by ICPMS							
Arsenic (As)	<3.0		3.0	ug	23-NOV-21	25-NOV-21	R5658124
Cadmium (Cd)	<2.0		2.0	ug	23-NOV-21	25-NOV-21	R5658124
Cobalt (Co)	<2.0		2.0	ug	23-NOV-21	25-NOV-21	R5658124
Chromium (Cr)	<5.0		5.0	ug	23-NOV-21	25-NOV-21	R5658124
Copper (Cu)	199		4.0	ug	23-NOV-21	25-NOV-21	R5658124
Iron (Fe)	590		20	ug	23-NOV-21	25-NOV-21	R5658124
Manganese (Mn)	14.9		1.0	ug	23-NOV-21	25-NOV-21	R5658124
Nickel (Ni)	<3.0		3.0	ug	23-NOV-21	25-NOV-21	R5658124
Lead (Pb)	<3.0		3.0	ug	23-NOV-21	25-NOV-21	R5658124
Selenium (Se)	<10		10	ug	23-NOV-21	25-NOV-21	R5658124
Vanadium (V)	<5.0		5.0	ug	23-NOV-21	25-NOV-21	R5658124
Zinc (Zn)	10.6		5.0	ug	23-NOV-21	25-NOV-21	R5658124
L2660517-12 NORTHWEST-TSP-387							
Sampled By: Client on 07-OCT-21							
Matrix: Hi Vol Filter							
Miscellaneous Parameters							
Total particulate	23600		2300	ug		22-NOV-21	R5656955
Metals on High Volume Filter by ICPMS							
Arsenic (As)	<3.0		3.0	ug	23-NOV-21	25-NOV-21	R5658124
Cadmium (Cd)	<2.0		2.0	ug	23-NOV-21	25-NOV-21	R5658124
Cobalt (Co)	<2.0		2.0	ug	23-NOV-21	25-NOV-21	R5658124
Chromium (Cr)	<5.0		5.0	ug	23-NOV-21	25-NOV-21	R5658124
Copper (Cu)	238		4.0	ug	23-NOV-21	25-NOV-21	R5658124
Iron (Fe)	435		20	ug	23-NOV-21	25-NOV-21	R5658124
Manganese (Mn)	10.2		1.0	ug	23-NOV-21	25-NOV-21	R5658124
Nickel (Ni)	<3.0		3.0	ug	23-NOV-21	25-NOV-21	R5658124
Lead (Pb)	<3.0		3.0	ug	23-NOV-21	25-NOV-21	R5658124
Selenium (Se)	<10		10	ug	23-NOV-21	25-NOV-21	R5658124
Vanadium (V)	<5.0		5.0	ug	23-NOV-21	25-NOV-21	R5658124
Zinc (Zn)	10.6		5.0	ug	23-NOV-21	25-NOV-21	R5658124

* Refer to Referenced Information for Qualifiers (if any) and Methodology.

ALS ENVIRONMENTAL ANALYTICAL REPORT

Sample Details/Parameters	Result	Qualifier*	D.L.	Units	Extracted	Analyzed	Batch
L2660517-13 NORTHWEST-TSP-388							
Sampled By: Client on 13-OCT-21							
Matrix: Hi Vol Filter							
Miscellaneous Parameters							
Total particulate	13900		2300	ug		22-NOV-21	R5656955
Metals on High Volume Filter by ICPMS							
Arsenic (As)	<3.0		3.0	ug	23-NOV-21	25-NOV-21	R5658124
Cadmium (Cd)	<2.0		2.0	ug	23-NOV-21	25-NOV-21	R5658124
Cobalt (Co)	<2.0		2.0	ug	23-NOV-21	25-NOV-21	R5658124
Chromium (Cr)	<5.0		5.0	ug	23-NOV-21	25-NOV-21	R5658124
Copper (Cu)	134		4.0	ug	23-NOV-21	25-NOV-21	R5658124
Iron (Fe)	180		20	ug	23-NOV-21	25-NOV-21	R5658124
Manganese (Mn)	4.8		1.0	ug	23-NOV-21	25-NOV-21	R5658124
Nickel (Ni)	<3.0		3.0	ug	23-NOV-21	25-NOV-21	R5658124
Lead (Pb)	<3.0		3.0	ug	23-NOV-21	25-NOV-21	R5658124
Selenium (Se)	<10		10	ug	23-NOV-21	25-NOV-21	R5658124
Vanadium (V)	<5.0		5.0	ug	23-NOV-21	25-NOV-21	R5658124
Zinc (Zn)	9.4		5.0	ug	23-NOV-21	25-NOV-21	R5658124
L2660517-14 NORTHWEST-TSP-389							
Sampled By: Client on 19-OCT-21							
Matrix: Hi Vol Filter							
Miscellaneous Parameters							
Total particulate	29900		2300	ug		22-NOV-21	R5656955
Metals on High Volume Filter by ICPMS							
Arsenic (As)	<3.0		3.0	ug	23-NOV-21	25-NOV-21	R5658124
Cadmium (Cd)	<2.0		2.0	ug	23-NOV-21	25-NOV-21	R5658124
Cobalt (Co)	<2.0		2.0	ug	23-NOV-21	25-NOV-21	R5658124
Chromium (Cr)	<5.0		5.0	ug	23-NOV-21	25-NOV-21	R5658124
Copper (Cu)	185		4.0	ug	23-NOV-21	25-NOV-21	R5658124
Iron (Fe)	545		20	ug	23-NOV-21	25-NOV-21	R5658124
Manganese (Mn)	27.3		1.0	ug	23-NOV-21	25-NOV-21	R5658124
Nickel (Ni)	<3.0		3.0	ug	23-NOV-21	25-NOV-21	R5658124
Lead (Pb)	<3.0		3.0	ug	23-NOV-21	25-NOV-21	R5658124
Selenium (Se)	<10		10	ug	23-NOV-21	25-NOV-21	R5658124
Vanadium (V)	<5.0		5.0	ug	23-NOV-21	25-NOV-21	R5658124
Zinc (Zn)	8.9		5.0	ug	23-NOV-21	25-NOV-21	R5658124
L2660517-15 NORTHWEST-TSP-390							
Sampled By: Client on 25-OCT-21							
Matrix: Hi Vol Filter							
Miscellaneous Parameters							
Total particulate	144000		2300	ug		22-NOV-21	R5656955
Metals on High Volume Filter by ICPMS							
Arsenic (As)	<3.0		3.0	ug	23-NOV-21	25-NOV-21	R5658124
Cadmium (Cd)	<2.0		2.0	ug	23-NOV-21	25-NOV-21	R5658124
Cobalt (Co)	<2.0		2.0	ug	23-NOV-21	25-NOV-21	R5658124
Chromium (Cr)	7.5		5.0	ug	23-NOV-21	25-NOV-21	R5658124
Copper (Cu)	71.6		4.0	ug	23-NOV-21	25-NOV-21	R5658124
Iron (Fe)	3470		20	ug	23-NOV-21	25-NOV-21	R5658124
Manganese (Mn)	79.7		1.0	ug	23-NOV-21	25-NOV-21	R5658124
Nickel (Ni)	5.0		3.0	ug	23-NOV-21	25-NOV-21	R5658124
Lead (Pb)	<3.0		3.0	ug	23-NOV-21	25-NOV-21	R5658124
Selenium (Se)	<10		10	ug	23-NOV-21	25-NOV-21	R5658124
Vanadium (V)	6.9		5.0	ug	23-NOV-21	25-NOV-21	R5658124
Zinc (Zn)	33.6		5.0	ug	23-NOV-21	25-NOV-21	R5658124

* Refer to Referenced Information for Qualifiers (if any) and Methodology.

ALS ENVIRONMENTAL ANALYTICAL REPORT

Sample Details/Parameters	Result	Qualifier*	D.L.	Units	Extracted	Analyzed	Batch
L2660517-16 TSP-TRAVEL BLANK							
Sampled By: Client on 05-NOV-21							
Matrix: Hi Vol Filter							
Miscellaneous Parameters							
Total particulate	<2300		2300	ug		22-NOV-21	R5656955
Metals on High Volume Filter by ICPMS							
Arsenic (As)	<3.0		3.0	ug	23-NOV-21	25-NOV-21	R5658124
Cadmium (Cd)	<2.0		2.0	ug	23-NOV-21	25-NOV-21	R5658124
Cobalt (Co)	<2.0		2.0	ug	23-NOV-21	25-NOV-21	R5658124
Chromium (Cr)	<5.0		5.0	ug	23-NOV-21	25-NOV-21	R5658124
Copper (Cu)	<4.0		4.0	ug	23-NOV-21	25-NOV-21	R5658124
Iron (Fe)	38		20	ug	23-NOV-21	25-NOV-21	R5658124
Manganese (Mn)	<1.0		1.0	ug	23-NOV-21	25-NOV-21	R5658124
Nickel (Ni)	<3.0		3.0	ug	23-NOV-21	25-NOV-21	R5658124
Lead (Pb)	<3.0		3.0	ug	23-NOV-21	25-NOV-21	R5658124
Selenium (Se)	<10		10	ug	23-NOV-21	25-NOV-21	R5658124
Vanadium (V)	<5.0		5.0	ug	23-NOV-21	25-NOV-21	R5658124
Zinc (Zn)	<5.0		5.0	ug	23-NOV-21	25-NOV-21	R5658124
L2660517-17 SOUTH-PM2.5-386							
Sampled By: Client on 01-OCT-21							
Matrix: 47mm Filter							
Miscellaneous Parameters							
Total particulate	256		15	ug		30-NOV-21	R5659152
L2660517-18 SOUTH-PM2.5-387							
Sampled By: Client on 07-OCT-21							
Matrix: 47mm Filter							
Miscellaneous Parameters							
Total particulate	116		15	ug		30-NOV-21	R5659152
L2660517-19 SOUTH-PM2.5-388							
Sampled By: Client on 13-OCT-21							
Matrix: 47mm Filter							
Miscellaneous Parameters							
Total particulate	60		15	ug		30-NOV-21	R5659152
L2660517-20 SOUTH-PM2.5-389							
Sampled By: Client on 19-OCT-21							
Matrix: 47mm Filter							
Miscellaneous Parameters							
Total particulate	101		15	ug		30-NOV-21	R5659152
L2660517-21 SOUTH-PM2.5-390							
Sampled By: Client on 25-OCT-21							
Matrix: 47mm Filter							
Miscellaneous Parameters							
Total particulate	<15		15	ug		30-NOV-21	R5659152
L2660517-22 NORTH-PM2.5-386							
Sampled By: Client on 01-OCT-21							
Matrix: 47mm Filter							
Miscellaneous Parameters							
Total particulate	215		15	ug		30-NOV-21	R5659152
L2660517-23 NORTH-PM2.5-387							
Sampled By: Client on 07-OCT-21							
Matrix: 47mm Filter							
Miscellaneous Parameters							

* Refer to Referenced Information for Qualifiers (if any) and Methodology.

ALS ENVIRONMENTAL ANALYTICAL REPORT

Sample Details/Parameters	Result	Qualifier*	D.L.	Units	Extracted	Analyzed	Batch
L2660517-23 NORTH-PM2.5-387							
Sampled By: Client on 07-OCT-21							
Matrix: 47mm Filter							
Total particulate	124		15	ug		30-NOV-21	R5659152
L2660517-24 NORTH-PM2.5-388							
Sampled By: Client on 13-OCT-21							
Matrix: 47mm Filter							
Miscellaneous Parameters							
Total particulate	37		15	ug		30-NOV-21	R5659152
L2660517-25 NORTH-PM2.5-389							
Sampled By: Client on 19-OCT-21							
Matrix: 47mm Filter							
Miscellaneous Parameters							
Total particulate	62		15	ug		30-NOV-21	R5659152
L2660517-26 NORTH-PM2.5-390							
Sampled By: Client on 25-OCT-21							
Matrix: 47mm Filter							
Miscellaneous Parameters							
Total particulate	32		15	ug		30-NOV-21	R5659152
L2660517-27 PM2.5-TRAVEL BLANK							
Sampled By: Client on 05-NOV-21							
Matrix: 47mm Filter							
Miscellaneous Parameters							
Total particulate	<15		15	ug		30-NOV-21	R5659152
L2660517-28 NOP1-DUSTFALL-10							
Sampled By: Client on 29-OCT-21							
Matrix: Dustfall							
Dustfalls-Total, Soluble, Insoluble +FV							
Total Dustfall	1.79		0.11	mg/dm2.day		24-NOV-21	R5658015
Total Insoluble Dustfall	1.21		0.11	mg/dm2.day		24-NOV-21	R5658015
Total Soluble Dustfall	0.58		0.11	mg/dm2.day		24-NOV-21	R5658015
Fixed Dustfall	1.42		0.11	mg/dm2.day		24-NOV-21	R5658015
Fixed Insoluble Dustfall	1.19		0.11	mg/dm2.day		24-NOV-21	R5658015
Fixed Soluble Dustfall	0.23		0.11	mg/dm2.day		24-NOV-21	R5658015
Volatile Dustfall	0.36		0.11	mg/dm2.day		24-NOV-21	R5658015
Volatile Insoluble Dustfall	<0.11		0.11	mg/dm2.day		24-NOV-21	R5658015
Volatile Soluble Dustfall	0.35		0.11	mg/dm2.day		24-NOV-21	R5658015
Interval			1	days		24-NOV-21	R5656260
Mercury (Hg)-Total	<0.0000016		0.0000016	mg/dm2.day	24-NOV-21	24-NOV-21	R5656821
Total Metals in Dustfalls by ICPMS							
Aluminum (Al)-Total	0.0189		0.000095	mg/dm2.day	25-NOV-21	26-NOV-21	R5657864
Interval			1	days		25-NOV-21	R5656950
Antimony (Sb)-Total	0.0000035		0.0000032	mg/dm2.day	25-NOV-21	26-NOV-21	R5657864
Arsenic (As)-Total	0.0000087		0.0000032	mg/dm2.day	25-NOV-21	26-NOV-21	R5657864
Barium (Ba)-Total	0.0000946		0.0000016	mg/dm2.day	25-NOV-21	26-NOV-21	R5657864
Beryllium (Be)-Total	<0.000016		0.000016	mg/dm2.day	25-NOV-21	26-NOV-21	R5657864
Bismuth (Bi)-Total	<0.000016		0.000016	mg/dm2.day	25-NOV-21	26-NOV-21	R5657864
Boron (B)-Total	<0.00032		0.00032	mg/dm2.day	25-NOV-21	26-NOV-21	R5657864
Cadmium (Cd)-Total	0.0000018		0.0000016	mg/dm2.day	25-NOV-21	26-NOV-21	R5657864
Calcium (Ca)-Total	0.0362		0.00063	mg/dm2.day	25-NOV-21	26-NOV-21	R5657864
Chromium (Cr)-Total	0.000018		0.000016	mg/dm2.day	25-NOV-21	26-NOV-21	R5657864
Cobalt (Co)-Total	0.0000039		0.0000032	mg/dm2.day	25-NOV-21	26-NOV-21	R5657864

* Refer to Referenced Information for Qualifiers (if any) and Methodology.

ALS ENVIRONMENTAL ANALYTICAL REPORT

Sample Details/Parameters	Result	Qualifier*	D.L.	Units	Extracted	Analyzed	Batch
L2660517-28 NOP1-DUSTFALL-10							
Sampled By: Client on 29-OCT-21							
Matrix: Dustfall							
Total Metals in Dustfalls by ICPMS							
Copper (Cu)-Total	0.000089		0.000016	mg/dm2.day	25-NOV-21	26-NOV-21	R5657864
Lead (Pb)-Total	0.0000617		0.0000016	mg/dm2.day	25-NOV-21	26-NOV-21	R5657864
Iron (Fe)-Total	0.0141		0.00095	mg/dm2.day	25-NOV-21	26-NOV-21	R5657864
Lithium (Li)-Total	<0.00016		0.00016	mg/dm2.day	25-NOV-21	26-NOV-21	R5657864
Magnesium (Mg)-Total	0.00965		0.00016	mg/dm2.day	25-NOV-21	26-NOV-21	R5657864
Manganese (Mn)-Total	0.000817		0.0000032	mg/dm2.day	25-NOV-21	26-NOV-21	R5657864
Molybdenum (Mo)-Total	0.0000029		0.0000016	mg/dm2.day	25-NOV-21	26-NOV-21	R5657864
Nickel (Ni)-Total	0.000016		0.000016	mg/dm2.day	25-NOV-21	26-NOV-21	R5657864
Phosphorus (P)-Total	<0.0016		0.0016	mg/dm2.day	25-NOV-21	26-NOV-21	R5657864
Potassium (K)-Total	0.0052		0.0016	mg/dm2.day	25-NOV-21	26-NOV-21	R5657864
Selenium (Se)-Total	<0.000032		0.000032	mg/dm2.day	25-NOV-21	26-NOV-21	R5657864
Silicon (Si)-Total	0.0217		0.0016	mg/dm2.day	25-NOV-21	26-NOV-21	R5657864
Silver (Ag)-Total	0.00000218		0.00000032	mg/dm2.day	25-NOV-21	26-NOV-21	R5657864
Sodium (Na)-Total	0.0033		0.0016	mg/dm2.day	25-NOV-21	26-NOV-21	R5657864
Strontium (Sr)-Total	0.000101		0.0000032	mg/dm2.day	25-NOV-21	26-NOV-21	R5657864
Thallium (Tl)-Total	<0.0000032		0.0000032	mg/dm2.day	25-NOV-21	26-NOV-21	R5657864
Tin (Sn)-Total	<0.0000032		0.0000032	mg/dm2.day	25-NOV-21	26-NOV-21	R5657864
Titanium (Ti)-Total	<0.00032		0.00032	mg/dm2.day	25-NOV-21	26-NOV-21	R5657864
Uranium (U)-Total	<0.00000032		0.00000032	mg/dm2.day	25-NOV-21	26-NOV-21	R5657864
Vanadium (V)-Total	<0.000032		0.000032	mg/dm2.day	25-NOV-21	26-NOV-21	R5657864
Zinc (Zn)-Total	0.000545		0.000095	mg/dm2.day	25-NOV-21	26-NOV-21	R5657864
L2660517-29 CP1-DUSTFALL-10							
Sampled By: Client on 29-OCT-21							
Matrix: Dustfall							
Dustfalls-Total, Soluble, Insoluble +FV							
Total Dustfall	0.19		0.11	mg/dm2.day		24-NOV-21	R5658015
Total Insoluble Dustfall	<0.11		0.11	mg/dm2.day		24-NOV-21	R5658015
Total Soluble Dustfall	0.12		0.11	mg/dm2.day		24-NOV-21	R5658015
Fixed Dustfall	<0.11		0.11	mg/dm2.day		24-NOV-21	R5658015
Fixed Insoluble Dustfall	<0.11		0.11	mg/dm2.day		24-NOV-21	R5658015
Fixed Soluble Dustfall	<0.11		0.11	mg/dm2.day		24-NOV-21	R5658015
Volatile Dustfall	<0.11		0.11	mg/dm2.day		24-NOV-21	R5658015
Volatile Insoluble Dustfall	<0.11		0.11	mg/dm2.day		24-NOV-21	R5658015
Volatile Soluble Dustfall	<0.11		0.11	mg/dm2.day		24-NOV-21	R5658015
Interval			1	days		24-NOV-21	R5656260
Mercury (Hg)-Total	<0.0000023		0.0000023	mg/dm2.day	24-NOV-21	26-NOV-21	R5656821
Total Metals in Dustfalls by ICPMS							
Aluminum (Al)-Total	0.00163		0.00014	mg/dm2.day	25-NOV-21	26-NOV-21	R5657864
Interval			1	days		25-NOV-21	R5656950
Antimony (Sb)-Total	<0.0000046		0.0000046	mg/dm2.day	25-NOV-21	26-NOV-21	R5657864
Arsenic (As)-Total	<0.0000046		0.0000046	mg/dm2.day	25-NOV-21	26-NOV-21	R5657864
Barium (Ba)-Total	0.0000331		0.0000023	mg/dm2.day	25-NOV-21	26-NOV-21	R5657864
Beryllium (Be)-Total	<0.000023		0.000023	mg/dm2.day	25-NOV-21	26-NOV-21	R5657864
Bismuth (Bi)-Total	<0.000023		0.000023	mg/dm2.day	25-NOV-21	26-NOV-21	R5657864
Boron (B)-Total	<0.00046		0.00046	mg/dm2.day	25-NOV-21	26-NOV-21	R5657864
Cadmium (Cd)-Total	<0.0000023		0.0000023	mg/dm2.day	25-NOV-21	26-NOV-21	R5657864
Calcium (Ca)-Total	0.00939		0.00092	mg/dm2.day	25-NOV-21	26-NOV-21	R5657864
Chromium (Cr)-Total	<0.000023		0.000023	mg/dm2.day	25-NOV-21	26-NOV-21	R5657864
Cobalt (Co)-Total	<0.0000046		0.0000046	mg/dm2.day	25-NOV-21	26-NOV-21	R5657864

* Refer to Referenced Information for Qualifiers (if any) and Methodology.

ALS ENVIRONMENTAL ANALYTICAL REPORT

Sample Details/Parameters	Result	Qualifier*	D.L.	Units	Extracted	Analyzed	Batch
L2660517-29 CP1-DUSTFALL-10							
Sampled By: Client on 29-OCT-21							
Matrix: Dustfall							
Total Metals in Dustfalls by ICPMS							
Copper (Cu)-Total	0.000036		0.000023	mg/dm2.day	25-NOV-21	26-NOV-21	R5657864
Lead (Pb)-Total	0.0000094		0.0000023	mg/dm2.day	25-NOV-21	26-NOV-21	R5657864
Iron (Fe)-Total	0.0015		0.0014	mg/dm2.day	25-NOV-21	26-NOV-21	R5657864
Lithium (Li)-Total	<0.00023		0.00023	mg/dm2.day	25-NOV-21	26-NOV-21	R5657864
Magnesium (Mg)-Total	0.00206		0.00023	mg/dm2.day	25-NOV-21	26-NOV-21	R5657864
Manganese (Mn)-Total	0.000105		0.0000046	mg/dm2.day	25-NOV-21	26-NOV-21	R5657864
Molybdenum (Mo)-Total	<0.0000023		0.0000023	mg/dm2.day	25-NOV-21	26-NOV-21	R5657864
Nickel (Ni)-Total	<0.000023		0.000023	mg/dm2.day	25-NOV-21	26-NOV-21	R5657864
Phosphorus (P)-Total	<0.0023		0.0023	mg/dm2.day	25-NOV-21	26-NOV-21	R5657864
Potassium (K)-Total	0.0033		0.0023	mg/dm2.day	25-NOV-21	26-NOV-21	R5657864
Selenium (Se)-Total	<0.000046		0.000046	mg/dm2.day	25-NOV-21	26-NOV-21	R5657864
Silicon (Si)-Total	0.0024		0.0023	mg/dm2.day	25-NOV-21	26-NOV-21	R5657864
Silver (Ag)-Total	<0.00000046		0.00000046	mg/dm2.day	25-NOV-21	26-NOV-21	R5657864
Sodium (Na)-Total	<0.0023		0.0023	mg/dm2.day	25-NOV-21	26-NOV-21	R5657864
Strontium (Sr)-Total	0.0000216		0.0000046	mg/dm2.day	25-NOV-21	26-NOV-21	R5657864
Thallium (Tl)-Total	<0.0000046		0.0000046	mg/dm2.day	25-NOV-21	26-NOV-21	R5657864
Tin (Sn)-Total	<0.0000046		0.0000046	mg/dm2.day	25-NOV-21	26-NOV-21	R5657864
Titanium (Ti)-Total	<0.00046		0.00046	mg/dm2.day	25-NOV-21	26-NOV-21	R5657864
Uranium (U)-Total	<0.00000046		0.00000046	mg/dm2.day	25-NOV-21	26-NOV-21	R5657864
Vanadium (V)-Total	<0.000046		0.000046	mg/dm2.day	25-NOV-21	26-NOV-21	R5657864
Zinc (Zn)-Total	<0.00014		0.00014	mg/dm2.day	25-NOV-21	26-NOV-21	R5657864
L2660517-30 WCP1-DUSTFALL-10							
Sampled By: Client on 29-OCT-21							
Matrix: Dustfall							
Dustfalls-Total, Soluble, Insoluble +FV							
Total Dustfall	0.53		0.11	mg/dm2.day		24-NOV-21	R5658015
Total Insoluble Dustfall	0.29		0.11	mg/dm2.day		24-NOV-21	R5658015
Total Soluble Dustfall	0.24		0.11	mg/dm2.day		24-NOV-21	R5658015
Fixed Dustfall	0.36		0.11	mg/dm2.day		24-NOV-21	R5658015
Fixed Insoluble Dustfall	0.28		0.11	mg/dm2.day		24-NOV-21	R5658015
Fixed Soluble Dustfall	<0.11		0.11	mg/dm2.day		24-NOV-21	R5658015
Volatile Dustfall	0.17		0.11	mg/dm2.day		24-NOV-21	R5658015
Volatile Insoluble Dustfall	<0.11		0.11	mg/dm2.day		24-NOV-21	R5658015
Volatile Soluble Dustfall	0.16		0.11	mg/dm2.day		24-NOV-21	R5658015
Interval			1	days		24-NOV-21	R5656260
Mercury (Hg)-Total	<0.0000018		0.0000018	mg/dm2.day	24-NOV-21	24-NOV-21	R5656821
Total Metals in Dustfalls by ICPMS							
Aluminum (Al)-Total	0.00484		0.00011	mg/dm2.day	25-NOV-21	26-NOV-21	R5657864
Interval			1	days		25-NOV-21	R5656950
Antimony (Sb)-Total	<0.0000037		0.0000037	mg/dm2.day	25-NOV-21	26-NOV-21	R5657864
Arsenic (As)-Total	0.0000043		0.0000037	mg/dm2.day	25-NOV-21	26-NOV-21	R5657864
Barium (Ba)-Total	0.0000445		0.0000018	mg/dm2.day	25-NOV-21	26-NOV-21	R5657864
Beryllium (Be)-Total	<0.000018		0.000018	mg/dm2.day	25-NOV-21	26-NOV-21	R5657864
Bismuth (Bi)-Total	<0.000018		0.000018	mg/dm2.day	25-NOV-21	26-NOV-21	R5657864
Boron (B)-Total	<0.00037		0.00037	mg/dm2.day	25-NOV-21	26-NOV-21	R5657864
Cadmium (Cd)-Total	<0.0000018		0.0000018	mg/dm2.day	25-NOV-21	26-NOV-21	R5657864
Calcium (Ca)-Total	0.0142		0.00073	mg/dm2.day	25-NOV-21	26-NOV-21	R5657864
Chromium (Cr)-Total	<0.000018		0.000018	mg/dm2.day	25-NOV-21	26-NOV-21	R5657864
Cobalt (Co)-Total	<0.0000037		0.0000037	mg/dm2.day	25-NOV-21	26-NOV-21	R5657864

* Refer to Referenced Information for Qualifiers (if any) and Methodology.

ALS ENVIRONMENTAL ANALYTICAL REPORT

Sample Details/Parameters	Result	Qualifier*	D.L.	Units	Extracted	Analyzed	Batch
L2660517-30 WCP1-DUSTFALL-10							
Sampled By: Client on 29-OCT-21							
Matrix: Dustfall							
Total Metals in Dustfalls by ICPMS							
Copper (Cu)-Total	0.000025		0.000018	mg/dm2.day	25-NOV-21	26-NOV-21	R5657864
Lead (Pb)-Total	0.0000087		0.0000018	mg/dm2.day	25-NOV-21	26-NOV-21	R5657864
Iron (Fe)-Total	0.0035		0.0011	mg/dm2.day	25-NOV-21	26-NOV-21	R5657864
Lithium (Li)-Total	<0.00018		0.00018	mg/dm2.day	25-NOV-21	26-NOV-21	R5657864
Magnesium (Mg)-Total	0.00305		0.00018	mg/dm2.day	25-NOV-21	26-NOV-21	R5657864
Manganese (Mn)-Total	0.000209		0.0000037	mg/dm2.day	25-NOV-21	26-NOV-21	R5657864
Molybdenum (Mo)-Total	0.0000023		0.0000018	mg/dm2.day	25-NOV-21	26-NOV-21	R5657864
Nickel (Ni)-Total	<0.000018		0.000018	mg/dm2.day	25-NOV-21	26-NOV-21	R5657864
Phosphorus (P)-Total	<0.0018		0.0018	mg/dm2.day	25-NOV-21	26-NOV-21	R5657864
Potassium (K)-Total	0.0040		0.0018	mg/dm2.day	25-NOV-21	26-NOV-21	R5657864
Selenium (Se)-Total	<0.000037		0.000037	mg/dm2.day	25-NOV-21	26-NOV-21	R5657864
Silicon (Si)-Total	0.0066		0.0018	mg/dm2.day	25-NOV-21	26-NOV-21	R5657864
Silver (Ag)-Total	<0.00000037		0.00000037	mg/dm2.day	25-NOV-21	26-NOV-21	R5657864
Sodium (Na)-Total	<0.0018		0.0018	mg/dm2.day	25-NOV-21	26-NOV-21	R5657864
Strontium (Sr)-Total	0.0000363		0.0000037	mg/dm2.day	25-NOV-21	26-NOV-21	R5657864
Thallium (Tl)-Total	<0.0000037		0.0000037	mg/dm2.day	25-NOV-21	26-NOV-21	R5657864
Tin (Sn)-Total	<0.0000037		0.0000037	mg/dm2.day	25-NOV-21	26-NOV-21	R5657864
Titanium (Ti)-Total	<0.00037		0.00037	mg/dm2.day	25-NOV-21	26-NOV-21	R5657864
Uranium (U)-Total	<0.00000037		0.00000037	mg/dm2.day	25-NOV-21	26-NOV-21	R5657864
Vanadium (V)-Total	<0.000037		0.000037	mg/dm2.day	25-NOV-21	26-NOV-21	R5657864
Zinc (Zn)-Total	0.00013		0.00011	mg/dm2.day	25-NOV-21	26-NOV-21	R5657864
L2660517-31 GH1-DUSTFALL-10							
Sampled By: Client on 29-OCT-21							
Matrix: Dustfall							
Dustfalls-Total, Soluble, Insoluble +FV							
Total Dustfall	0.34		0.11	mg/dm2.day		24-NOV-21	R5658015
Total Insoluble Dustfall	0.23		0.11	mg/dm2.day		24-NOV-21	R5658015
Total Soluble Dustfall	<0.11		0.11	mg/dm2.day		24-NOV-21	R5658015
Fixed Dustfall	0.31		0.11	mg/dm2.day		24-NOV-21	R5658015
Fixed Insoluble Dustfall	0.21		0.11	mg/dm2.day		24-NOV-21	R5658015
Fixed Soluble Dustfall	<0.11		0.11	mg/dm2.day		24-NOV-21	R5658015
Volatile Dustfall	<0.11		0.11	mg/dm2.day		24-NOV-21	R5658015
Volatile Insoluble Dustfall	<0.11		0.11	mg/dm2.day		24-NOV-21	R5658015
Volatile Soluble Dustfall	<0.11		0.11	mg/dm2.day		24-NOV-21	R5658015
Interval			1	days		24-NOV-21	R5656260
Mercury (Hg)-Total	<0.0000019		0.0000019	mg/dm2.day	24-NOV-21	24-NOV-21	R5656821
Total Metals in Dustfalls by ICPMS							
Aluminum (Al)-Total	0.00501		0.00011	mg/dm2.day	25-NOV-21	26-NOV-21	R5657864
Interval			1	days		25-NOV-21	R5656950
Antimony (Sb)-Total	<0.0000038		0.0000038	mg/dm2.day	25-NOV-21	26-NOV-21	R5657864
Arsenic (As)-Total	<0.0000038		0.0000038	mg/dm2.day	25-NOV-21	26-NOV-21	R5657864
Barium (Ba)-Total	0.0000463		0.0000019	mg/dm2.day	25-NOV-21	26-NOV-21	R5657864
Beryllium (Be)-Total	<0.000019		0.000019	mg/dm2.day	25-NOV-21	26-NOV-21	R5657864
Bismuth (Bi)-Total	<0.000019		0.000019	mg/dm2.day	25-NOV-21	26-NOV-21	R5657864
Boron (B)-Total	<0.00038		0.00038	mg/dm2.day	25-NOV-21	26-NOV-21	R5657864
Cadmium (Cd)-Total	<0.0000019		0.0000019	mg/dm2.day	25-NOV-21	26-NOV-21	R5657864
Calcium (Ca)-Total	0.0159		0.00076	mg/dm2.day	25-NOV-21	26-NOV-21	R5657864
Chromium (Cr)-Total	<0.000019		0.000019	mg/dm2.day	25-NOV-21	26-NOV-21	R5657864
Cobalt (Co)-Total	<0.0000038		0.0000038	mg/dm2.day	25-NOV-21	26-NOV-21	R5657864

* Refer to Referenced Information for Qualifiers (if any) and Methodology.

ALS ENVIRONMENTAL ANALYTICAL REPORT

Sample Details/Parameters	Result	Qualifier*	D.L.	Units	Extracted	Analyzed	Batch
L2660517-31 GH1-DUSTFALL-10							
Sampled By: Client on 29-OCT-21							
Matrix: Dustfall							
Total Metals in Dustfalls by ICPMS							
Copper (Cu)-Total	0.000027		0.000019	mg/dm2.day	25-NOV-21	26-NOV-21	R5657864
Lead (Pb)-Total	0.0000083		0.0000019	mg/dm2.day	25-NOV-21	26-NOV-21	R5657864
Iron (Fe)-Total	0.0049		0.0011	mg/dm2.day	25-NOV-21	26-NOV-21	R5657864
Lithium (Li)-Total	<0.00019		0.00019	mg/dm2.day	25-NOV-21	26-NOV-21	R5657864
Magnesium (Mg)-Total	0.00380		0.00019	mg/dm2.day	25-NOV-21	26-NOV-21	R5657864
Manganese (Mn)-Total	0.000222		0.0000038	mg/dm2.day	25-NOV-21	26-NOV-21	R5657864
Molybdenum (Mo)-Total	<0.0000019		0.0000019	mg/dm2.day	25-NOV-21	26-NOV-21	R5657864
Nickel (Ni)-Total	<0.000019		0.000019	mg/dm2.day	25-NOV-21	26-NOV-21	R5657864
Phosphorus (P)-Total	<0.0019		0.0019	mg/dm2.day	25-NOV-21	26-NOV-21	R5657864
Potassium (K)-Total	0.0036		0.0019	mg/dm2.day	25-NOV-21	26-NOV-21	R5657864
Selenium (Se)-Total	<0.000038		0.000038	mg/dm2.day	25-NOV-21	26-NOV-21	R5657864
Silicon (Si)-Total	0.0068		0.0019	mg/dm2.day	25-NOV-21	26-NOV-21	R5657864
Silver (Ag)-Total	<0.00000038		0.00000038	mg/dm2.day	25-NOV-21	26-NOV-21	R5657864
Sodium (Na)-Total	<0.0019		0.0019	mg/dm2.day	25-NOV-21	26-NOV-21	R5657864
Strontium (Sr)-Total	0.0000419		0.0000038	mg/dm2.day	25-NOV-21	26-NOV-21	R5657864
Thallium (Tl)-Total	<0.0000038		0.0000038	mg/dm2.day	25-NOV-21	26-NOV-21	R5657864
Tin (Sn)-Total	<0.0000038		0.0000038	mg/dm2.day	25-NOV-21	26-NOV-21	R5657864
Titanium (Ti)-Total	<0.00038		0.00038	mg/dm2.day	25-NOV-21	26-NOV-21	R5657864
Uranium (U)-Total	<0.00000038		0.00000038	mg/dm2.day	25-NOV-21	26-NOV-21	R5657864
Vanadium (V)-Total	<0.000038		0.000038	mg/dm2.day	25-NOV-21	26-NOV-21	R5657864
Zinc (Zn)-Total	<0.00011		0.00011	mg/dm2.day	25-NOV-21	26-NOV-21	R5657864
L2660517-32 SPP1-DUSTFALL-42							
Sampled By: Client on 13-OCT-21							
Matrix: Dustfall							
Dustfalls-Total, Soluble, Insoluble +FV							
Total Dustfall	0.62		0.14	mg/dm2.day		24-NOV-21	R5658015
Total Insoluble Dustfall	0.19		0.14	mg/dm2.day		24-NOV-21	R5658015
Total Soluble Dustfall	0.43		0.14	mg/dm2.day		24-NOV-21	R5658015
Fixed Dustfall	0.35		0.14	mg/dm2.day		24-NOV-21	R5658015
Fixed Insoluble Dustfall	0.19		0.14	mg/dm2.day		24-NOV-21	R5658015
Fixed Soluble Dustfall	0.16		0.14	mg/dm2.day		24-NOV-21	R5658015
Volatile Dustfall	0.28		0.14	mg/dm2.day		24-NOV-21	R5658015
Volatile Insoluble Dustfall	<0.14		0.14	mg/dm2.day		24-NOV-21	R5658015
Volatile Soluble Dustfall	0.28		0.14	mg/dm2.day		24-NOV-21	R5658015
Interval			1	days		24-NOV-21	R5656260
Mercury (Hg)-Total	<0.0000039		0.0000039	mg/dm2.day	24-NOV-21	24-NOV-21	R5656821
Total Metals in Dustfalls by ICPMS							
Aluminum (Al)-Total	0.00454		0.00024	mg/dm2.day	25-NOV-21	26-NOV-21	R5657864
Interval			1	days		25-NOV-21	R5656950
Antimony (Sb)-Total	<0.0000079		0.0000079	mg/dm2.day	25-NOV-21	26-NOV-21	R5657864
Arsenic (As)-Total	0.0000081		0.0000079	mg/dm2.day	25-NOV-21	26-NOV-21	R5657864
Barium (Ba)-Total	0.0000574		0.0000039	mg/dm2.day	25-NOV-21	26-NOV-21	R5657864
Beryllium (Be)-Total	<0.000039		0.000039	mg/dm2.day	25-NOV-21	26-NOV-21	R5657864
Bismuth (Bi)-Total	<0.000039		0.000039	mg/dm2.day	25-NOV-21	26-NOV-21	R5657864
Boron (B)-Total	<0.00079		0.00079	mg/dm2.day	25-NOV-21	26-NOV-21	R5657864
Cadmium (Cd)-Total	<0.0000039		0.0000039	mg/dm2.day	25-NOV-21	26-NOV-21	R5657864
Calcium (Ca)-Total	0.0214		0.0016	mg/dm2.day	25-NOV-21	26-NOV-21	R5657864
Chromium (Cr)-Total	<0.000039		0.000039	mg/dm2.day	25-NOV-21	26-NOV-21	R5657864
Cobalt (Co)-Total	<0.0000079		0.0000079	mg/dm2.day	25-NOV-21	26-NOV-21	R5657864

* Refer to Referenced Information for Qualifiers (if any) and Methodology.

ALS ENVIRONMENTAL ANALYTICAL REPORT

Sample Details/Parameters	Result	Qualifier*	D.L.	Units	Extracted	Analyzed	Batch
L2660517-32 SPP1-DUSTFALL-42							
Sampled By: Client on 13-OCT-21							
Matrix: Dustfall							
Total Metals in Dustfalls by ICPMS							
Copper (Cu)-Total	<0.000039		0.000039	mg/dm2.day	25-NOV-21	26-NOV-21	R5657864
Lead (Pb)-Total	0.0000123		0.0000039	mg/dm2.day	25-NOV-21	26-NOV-21	R5657864
Iron (Fe)-Total	0.0039		0.0024	mg/dm2.day	25-NOV-21	26-NOV-21	R5657864
Lithium (Li)-Total	<0.00039		0.00039	mg/dm2.day	25-NOV-21	26-NOV-21	R5657864
Magnesium (Mg)-Total	0.00385		0.00039	mg/dm2.day	25-NOV-21	26-NOV-21	R5657864
Manganese (Mn)-Total	0.000250		0.0000079	mg/dm2.day	25-NOV-21	26-NOV-21	R5657864
Molybdenum (Mo)-Total	<0.0000039		0.0000039	mg/dm2.day	25-NOV-21	26-NOV-21	R5657864
Nickel (Ni)-Total	<0.000039		0.000039	mg/dm2.day	25-NOV-21	26-NOV-21	R5657864
Phosphorus (P)-Total	<0.0039		0.0039	mg/dm2.day	25-NOV-21	26-NOV-21	R5657864
Potassium (K)-Total	0.0041		0.0039	mg/dm2.day	25-NOV-21	26-NOV-21	R5657864
Selenium (Se)-Total	<0.000079		0.000079	mg/dm2.day	25-NOV-21	26-NOV-21	R5657864
Silicon (Si)-Total	0.0056		0.0039	mg/dm2.day	25-NOV-21	26-NOV-21	R5657864
Silver (Ag)-Total	<0.00000079		0.00000079	mg/dm2.day	25-NOV-21	26-NOV-21	R5657864
Sodium (Na)-Total	<0.0039		0.0039	mg/dm2.day	25-NOV-21	26-NOV-21	R5657864
Strontium (Sr)-Total	0.0000452		0.0000079	mg/dm2.day	25-NOV-21	26-NOV-21	R5657864
Thallium (Tl)-Total	<0.0000079		0.0000079	mg/dm2.day	25-NOV-21	26-NOV-21	R5657864
Tin (Sn)-Total	<0.0000079		0.0000079	mg/dm2.day	25-NOV-21	26-NOV-21	R5657864
Titanium (Ti)-Total	<0.00079		0.00079	mg/dm2.day	25-NOV-21	26-NOV-21	R5657864
Uranium (U)-Total	<0.00000079		0.00000079	mg/dm2.day	25-NOV-21	26-NOV-21	R5657864
Vanadium (V)-Total	<0.000079		0.000079	mg/dm2.day	25-NOV-21	26-NOV-21	R5657864
Zinc (Zn)-Total	<0.00024		0.00024	mg/dm2.day	25-NOV-21	26-NOV-21	R5657864
L2660517-33 SPP1-DUSTFALL-43							
Sampled By: Client on 20-OCT-21							
Matrix: Dustfall							
Dustfalls-Total, Soluble, Insoluble +FV							
Total Dustfall	1.41		0.43	mg/dm2.day		24-NOV-21	R5658015
Total Insoluble Dustfall	0.46		0.43	mg/dm2.day		24-NOV-21	R5658015
Total Soluble Dustfall	0.95		0.43	mg/dm2.day		24-NOV-21	R5658015
Fixed Dustfall	0.82		0.43	mg/dm2.day		24-NOV-21	R5658015
Fixed Insoluble Dustfall	0.45		0.43	mg/dm2.day		24-NOV-21	R5658015
Fixed Soluble Dustfall	<0.43		0.43	mg/dm2.day		24-NOV-21	R5658015
Volatile Dustfall	0.58		0.43	mg/dm2.day		24-NOV-21	R5658015
Volatile Insoluble Dustfall	<0.43		0.43	mg/dm2.day		24-NOV-21	R5658015
Volatile Soluble Dustfall	0.57		0.43	mg/dm2.day		24-NOV-21	R5658015
Interval			1	days		24-NOV-21	R5656260
Mercury (Hg)-Total	<0.0000057		0.0000057	mg/dm2.day	24-NOV-21	24-NOV-21	R5656821
Total Metals in Dustfalls by ICPMS							
Aluminum (Al)-Total	0.0108		0.00034	mg/dm2.day	25-NOV-21	26-NOV-21	R5657864
Interval			1	days		25-NOV-21	R5656950
Antimony (Sb)-Total	<0.000011		0.000011	mg/dm2.day	25-NOV-21	26-NOV-21	R5657864
Arsenic (As)-Total	<0.000011		0.000011	mg/dm2.day	25-NOV-21	26-NOV-21	R5657864
Barium (Ba)-Total	0.0000724		0.0000057	mg/dm2.day	25-NOV-21	26-NOV-21	R5657864
Beryllium (Be)-Total	<0.000057		0.000057	mg/dm2.day	25-NOV-21	26-NOV-21	R5657864
Bismuth (Bi)-Total	<0.000057		0.000057	mg/dm2.day	25-NOV-21	26-NOV-21	R5657864
Boron (B)-Total	<0.0011		0.0011	mg/dm2.day	25-NOV-21	26-NOV-21	R5657864
Cadmium (Cd)-Total	<0.0000057		0.0000057	mg/dm2.day	25-NOV-21	26-NOV-21	R5657864
Calcium (Ca)-Total	0.0301		0.0023	mg/dm2.day	25-NOV-21	26-NOV-21	R5657864
Chromium (Cr)-Total	<0.000057		0.000057	mg/dm2.day	25-NOV-21	26-NOV-21	R5657864
Cobalt (Co)-Total	<0.000011		0.000011	mg/dm2.day	25-NOV-21	26-NOV-21	R5657864

* Refer to Referenced Information for Qualifiers (if any) and Methodology.

ALS ENVIRONMENTAL ANALYTICAL REPORT

Sample Details/Parameters	Result	Qualifier*	D.L.	Units	Extracted	Analyzed	Batch
L2660517-33 SPP1-DUSTFALL-43							
Sampled By: Client on 20-OCT-21							
Matrix: Dustfall							
Total Metals in Dustfalls by ICPMS							
Copper (Cu)-Total	0.000068		0.000057	mg/dm2.day	25-NOV-21	26-NOV-21	R5657864
Lead (Pb)-Total	0.0000403		0.0000057	mg/dm2.day	25-NOV-21	26-NOV-21	R5657864
Iron (Fe)-Total	0.0088		0.0034	mg/dm2.day	25-NOV-21	26-NOV-21	R5657864
Lithium (Li)-Total	<0.00057		0.00057	mg/dm2.day	25-NOV-21	26-NOV-21	R5657864
Magnesium (Mg)-Total	0.00660		0.00057	mg/dm2.day	25-NOV-21	26-NOV-21	R5657864
Manganese (Mn)-Total	0.000643		0.000011	mg/dm2.day	25-NOV-21	26-NOV-21	R5657864
Molybdenum (Mo)-Total	<0.0000057		0.0000057	mg/dm2.day	25-NOV-21	26-NOV-21	R5657864
Nickel (Ni)-Total	<0.000057		0.000057	mg/dm2.day	25-NOV-21	26-NOV-21	R5657864
Phosphorus (P)-Total	<0.0057		0.0057	mg/dm2.day	25-NOV-21	26-NOV-21	R5657864
Potassium (K)-Total	<0.0057		0.0057	mg/dm2.day	25-NOV-21	26-NOV-21	R5657864
Selenium (Se)-Total	<0.00011		0.00011	mg/dm2.day	25-NOV-21	26-NOV-21	R5657864
Silicon (Si)-Total	0.0122		0.0057	mg/dm2.day	25-NOV-21	26-NOV-21	R5657864
Silver (Ag)-Total	<0.0000011		0.0000011	mg/dm2.day	25-NOV-21	26-NOV-21	R5657864
Sodium (Na)-Total	<0.0057		0.0057	mg/dm2.day	25-NOV-21	26-NOV-21	R5657864
Strontium (Sr)-Total	0.000081		0.000011	mg/dm2.day	25-NOV-21	26-NOV-21	R5657864
Thallium (Tl)-Total	<0.000011		0.000011	mg/dm2.day	25-NOV-21	26-NOV-21	R5657864
Tin (Sn)-Total	<0.000011		0.000011	mg/dm2.day	25-NOV-21	26-NOV-21	R5657864
Titanium (Ti)-Total	<0.0011		0.0011	mg/dm2.day	25-NOV-21	26-NOV-21	R5657864
Uranium (U)-Total	<0.0000011		0.0000011	mg/dm2.day	25-NOV-21	26-NOV-21	R5657864
Vanadium (V)-Total	<0.00011		0.00011	mg/dm2.day	25-NOV-21	26-NOV-21	R5657864
Zinc (Zn)-Total	<0.00034		0.00034	mg/dm2.day	25-NOV-21	26-NOV-21	R5657864
L2660517-34 SPP1-DUSTFALL-44							
Sampled By: Client on 27-OCT-21							
Matrix: Dustfall							
Dustfalls-Total, Soluble, Insoluble +FV							
Total Dustfall	1.51		0.43	mg/dm2.day		24-NOV-21	R5658015
Total Insoluble Dustfall	<0.43		0.43	mg/dm2.day		24-NOV-21	R5658015
Total Soluble Dustfall	1.36		0.43	mg/dm2.day		24-NOV-21	R5658015
Fixed Dustfall	0.71		0.43	mg/dm2.day		24-NOV-21	R5658015
Fixed Insoluble Dustfall	<0.43		0.43	mg/dm2.day		24-NOV-21	R5658015
Fixed Soluble Dustfall	0.56		0.43	mg/dm2.day		24-NOV-21	R5658015
Volatile Dustfall	0.80		0.43	mg/dm2.day		24-NOV-21	R5658015
Volatile Insoluble Dustfall	<0.43		0.43	mg/dm2.day		24-NOV-21	R5658015
Volatile Soluble Dustfall	0.80		0.43	mg/dm2.day		24-NOV-21	R5658015
Interval			1	days		24-NOV-21	R5656260
Mercury (Hg)-Total	<0.0000055		0.0000055	mg/dm2.day	24-NOV-21	24-NOV-21	R5656821
Total Metals in Dustfalls by ICPMS							
Aluminum (Al)-Total	0.00236		0.00033	mg/dm2.day	25-NOV-21	26-NOV-21	R5657864
Interval			1	days		25-NOV-21	R5656950
Antimony (Sb)-Total	<0.000011		0.000011	mg/dm2.day	25-NOV-21	26-NOV-21	R5657864
Arsenic (As)-Total	<0.000011		0.000011	mg/dm2.day	25-NOV-21	26-NOV-21	R5657864
Barium (Ba)-Total	0.0000172		0.0000055	mg/dm2.day	25-NOV-21	26-NOV-21	R5657864
Beryllium (Be)-Total	<0.000055		0.000055	mg/dm2.day	25-NOV-21	26-NOV-21	R5657864
Bismuth (Bi)-Total	<0.000055		0.000055	mg/dm2.day	25-NOV-21	26-NOV-21	R5657864
Boron (B)-Total	<0.0011		0.0011	mg/dm2.day	25-NOV-21	26-NOV-21	R5657864
Cadmium (Cd)-Total	<0.0000055		0.0000055	mg/dm2.day	25-NOV-21	26-NOV-21	R5657864
Calcium (Ca)-Total	0.0060		0.0022	mg/dm2.day	25-NOV-21	26-NOV-21	R5657864
Chromium (Cr)-Total	<0.000055		0.000055	mg/dm2.day	25-NOV-21	26-NOV-21	R5657864
Cobalt (Co)-Total	<0.000011		0.000011	mg/dm2.day	25-NOV-21	26-NOV-21	R5657864
Copper (Cu)-Total	<0.000055		0.000055	mg/dm2.day	25-NOV-21	26-NOV-21	R5657864

* Refer to Referenced Information for Qualifiers (if any) and Methodology.

ALS ENVIRONMENTAL ANALYTICAL REPORT

Sample Details/Parameters	Result	Qualifier*	D.L.	Units	Extracted	Analyzed	Batch
L2660517-34 SPP1-DUSTFALL-44							
Sampled By: Client on 27-OCT-21							
Matrix: Dustfall							
Total Metals in Dustfalls by ICPMS							
Lead (Pb)-Total	<0.0000055		0.0000055	mg/dm2.day	25-NOV-21	26-NOV-21	R5657864
Iron (Fe)-Total	<0.0033		0.0033	mg/dm2.day	25-NOV-21	26-NOV-21	R5657864
Lithium (Li)-Total	<0.00055		0.00055	mg/dm2.day	25-NOV-21	26-NOV-21	R5657864
Magnesium (Mg)-Total	0.00163		0.00055	mg/dm2.day	25-NOV-21	26-NOV-21	R5657864
Manganese (Mn)-Total	0.000085		0.000011	mg/dm2.day	25-NOV-21	26-NOV-21	R5657864
Molybdenum (Mo)-Total	0.0000086		0.0000055	mg/dm2.day	25-NOV-21	26-NOV-21	R5657864
Nickel (Ni)-Total	<0.000055		0.000055	mg/dm2.day	25-NOV-21	26-NOV-21	R5657864
Phosphorus (P)-Total	<0.0055		0.0055	mg/dm2.day	25-NOV-21	26-NOV-21	R5657864
Potassium (K)-Total	<0.0055		0.0055	mg/dm2.day	25-NOV-21	26-NOV-21	R5657864
Selenium (Se)-Total	<0.00011		0.00011	mg/dm2.day	25-NOV-21	26-NOV-21	R5657864
Silicon (Si)-Total	<0.0055		0.0055	mg/dm2.day	25-NOV-21	26-NOV-21	R5657864
Silver (Ag)-Total	<0.0000011		0.0000011	mg/dm2.day	25-NOV-21	26-NOV-21	R5657864
Sodium (Na)-Total	<0.0055		0.0055	mg/dm2.day	25-NOV-21	26-NOV-21	R5657864
Strontium (Sr)-Total	0.000015		0.000011	mg/dm2.day	25-NOV-21	26-NOV-21	R5657864
Thallium (Tl)-Total	<0.000011		0.000011	mg/dm2.day	25-NOV-21	26-NOV-21	R5657864
Tin (Sn)-Total	<0.000011		0.000011	mg/dm2.day	25-NOV-21	26-NOV-21	R5657864
Titanium (Ti)-Total	<0.0011		0.0011	mg/dm2.day	25-NOV-21	26-NOV-21	R5657864
Uranium (U)-Total	<0.0000011		0.0000011	mg/dm2.day	25-NOV-21	26-NOV-21	R5657864
Vanadium (V)-Total	<0.00011		0.00011	mg/dm2.day	25-NOV-21	26-NOV-21	R5657864
Zinc (Zn)-Total	<0.00033		0.00033	mg/dm2.day	25-NOV-21	26-NOV-21	R5657864
L2660517-35 SPP1-DUSTFALL-45							
Sampled By: Client on 03-NOV-21							
Matrix: Dustfall							
Dustfalls-Total, Soluble, Insoluble +FV							
Total Dustfall	0.78		0.43	mg/dm2.day		24-NOV-21	R5658015
Total Insoluble Dustfall	<0.43		0.43	mg/dm2.day		24-NOV-21	R5658015
Total Soluble Dustfall	<0.43		0.43	mg/dm2.day		24-NOV-21	R5658015
Fixed Dustfall	0.61		0.43	mg/dm2.day		24-NOV-21	R5658015
Fixed Insoluble Dustfall	<0.43		0.43	mg/dm2.day		24-NOV-21	R5658015
Fixed Soluble Dustfall	<0.43		0.43	mg/dm2.day		24-NOV-21	R5658015
Volatile Dustfall	<0.43		0.43	mg/dm2.day		24-NOV-21	R5658015
Volatile Insoluble Dustfall	<0.43		0.43	mg/dm2.day		24-NOV-21	R5658015
Volatile Soluble Dustfall	<0.43		0.43	mg/dm2.day		24-NOV-21	R5658015
Interval			1	days		24-NOV-21	R5656260
Mercury (Hg)-Total	<0.0000077		0.0000077	mg/dm2.day	24-NOV-21	24-NOV-21	R5656821
Total Metals in Dustfalls by ICPMS							
Aluminum (Al)-Total	0.00659		0.00046	mg/dm2.day	25-NOV-21	26-NOV-21	R5657864
Interval			1	days		25-NOV-21	R5656950
Antimony (Sb)-Total	<0.000015		0.000015	mg/dm2.day	25-NOV-21	26-NOV-21	R5657864
Arsenic (As)-Total	<0.000015		0.000015	mg/dm2.day	25-NOV-21	26-NOV-21	R5657864
Barium (Ba)-Total	0.0000356		0.0000077	mg/dm2.day	25-NOV-21	26-NOV-21	R5657864
Beryllium (Be)-Total	<0.000077		0.000077	mg/dm2.day	25-NOV-21	26-NOV-21	R5657864
Bismuth (Bi)-Total	<0.000077		0.000077	mg/dm2.day	25-NOV-21	26-NOV-21	R5657864
Boron (B)-Total	<0.0015		0.0015	mg/dm2.day	25-NOV-21	26-NOV-21	R5657864
Cadmium (Cd)-Total	<0.0000077		0.0000077	mg/dm2.day	25-NOV-21	26-NOV-21	R5657864
Calcium (Ca)-Total	0.0144		0.0031	mg/dm2.day	25-NOV-21	26-NOV-21	R5657864
Chromium (Cr)-Total	<0.000077		0.000077	mg/dm2.day	25-NOV-21	26-NOV-21	R5657864
Cobalt (Co)-Total	<0.000015		0.000015	mg/dm2.day	25-NOV-21	26-NOV-21	R5657864
Copper (Cu)-Total	<0.000077		0.000077	mg/dm2.day	25-NOV-21	26-NOV-21	R5657864
Lead (Pb)-Total	0.0000131		0.0000077	mg/dm2.day	25-NOV-21	26-NOV-21	R5657864

* Refer to Referenced Information for Qualifiers (if any) and Methodology.

ALS ENVIRONMENTAL ANALYTICAL REPORT

Sample Details/Parameters	Result	Qualifier*	D.L.	Units	Extracted	Analyzed	Batch
L2660517-35 SPP1-DUSTFALL-45							
Sampled By: Client on 03-NOV-21							
Matrix: Dustfall							
Total Metals in Dustfalls by ICPMS							
Iron (Fe)-Total	0.0051		0.0046	mg/dm2.day	25-NOV-21	26-NOV-21	R5657864
Lithium (Li)-Total	<0.00077		0.00077	mg/dm2.day	25-NOV-21	26-NOV-21	R5657864
Magnesium (Mg)-Total	0.00383		0.00077	mg/dm2.day	25-NOV-21	26-NOV-21	R5657864
Manganese (Mn)-Total	0.000249		0.000015	mg/dm2.day	25-NOV-21	26-NOV-21	R5657864
Molybdenum (Mo)-Total	<0.0000077		0.0000077	mg/dm2.day	25-NOV-21	26-NOV-21	R5657864
Nickel (Ni)-Total	<0.000077		0.000077	mg/dm2.day	25-NOV-21	26-NOV-21	R5657864
Phosphorus (P)-Total	<0.0077		0.0077	mg/dm2.day	25-NOV-21	26-NOV-21	R5657864
Potassium (K)-Total	<0.0077		0.0077	mg/dm2.day	25-NOV-21	26-NOV-21	R5657864
Selenium (Se)-Total	<0.00015		0.00015	mg/dm2.day	25-NOV-21	26-NOV-21	R5657864
Silicon (Si)-Total	<0.0077		0.0077	mg/dm2.day	25-NOV-21	26-NOV-21	R5657864
Silver (Ag)-Total	0.0000026		0.0000015	mg/dm2.day	25-NOV-21	26-NOV-21	R5657864
Sodium (Na)-Total	<0.0077		0.0077	mg/dm2.day	25-NOV-21	26-NOV-21	R5657864
Strontium (Sr)-Total	0.000036		0.000015	mg/dm2.day	25-NOV-21	26-NOV-21	R5657864
Thallium (Tl)-Total	<0.000015		0.000015	mg/dm2.day	25-NOV-21	26-NOV-21	R5657864
Tin (Sn)-Total	<0.000015		0.000015	mg/dm2.day	25-NOV-21	26-NOV-21	R5657864
Titanium (Ti)-Total	<0.0015		0.0015	mg/dm2.day	25-NOV-21	26-NOV-21	R5657864
Uranium (U)-Total	<0.0000015		0.0000015	mg/dm2.day	25-NOV-21	26-NOV-21	R5657864
Vanadium (V)-Total	<0.00015		0.00015	mg/dm2.day	25-NOV-21	26-NOV-21	R5657864
Zinc (Zn)-Total	<0.00046		0.00046	mg/dm2.day	25-NOV-21	26-NOV-21	R5657864
L2660517-36 DUSTFALL-GALLINGER ROAD							
Sampled By: Client on 29-OCT-21							
Matrix: Dustfall							
Dustfalls-Total, Soluble, Insoluble +FV							
Total Dustfall	0.32		0.11	mg/dm2.day		24-NOV-21	R5658015
Total Insoluble Dustfall	0.13		0.11	mg/dm2.day		24-NOV-21	R5658015
Total Soluble Dustfall	0.19		0.11	mg/dm2.day		24-NOV-21	R5658015
Fixed Dustfall	0.23		0.11	mg/dm2.day		24-NOV-21	R5658015
Fixed Insoluble Dustfall	<0.11		0.11	mg/dm2.day		24-NOV-21	R5658015
Fixed Soluble Dustfall	0.12		0.11	mg/dm2.day		24-NOV-21	R5658015
Volatile Dustfall	<0.11		0.11	mg/dm2.day		24-NOV-21	R5658015
Volatile Insoluble Dustfall	<0.11		0.11	mg/dm2.day		24-NOV-21	R5658015
Volatile Soluble Dustfall	<0.11		0.11	mg/dm2.day		24-NOV-21	R5658015
Interval			1	days		24-NOV-21	R5656260
Mercury (Hg)-Total	<0.0000026		0.0000026	mg/dm2.day	24-NOV-21	24-NOV-21	R5656821
Total Metals in Dustfalls by ICPMS							
Aluminum (Al)-Total	0.00261		0.00015	mg/dm2.day	25-NOV-21	26-NOV-21	R5657864
Interval			1	days		25-NOV-21	R5656950
Antimony (Sb)-Total	<0.0000052		0.0000052	mg/dm2.day	25-NOV-21	26-NOV-21	R5657864
Arsenic (As)-Total	<0.0000052		0.0000052	mg/dm2.day	25-NOV-21	26-NOV-21	R5657864
Barium (Ba)-Total	0.0000368		0.0000026	mg/dm2.day	25-NOV-21	26-NOV-21	R5657864
Beryllium (Be)-Total	<0.000026		0.000026	mg/dm2.day	25-NOV-21	26-NOV-21	R5657864
Bismuth (Bi)-Total	<0.000026		0.000026	mg/dm2.day	25-NOV-21	26-NOV-21	R5657864
Boron (B)-Total	<0.00052		0.00052	mg/dm2.day	25-NOV-21	26-NOV-21	R5657864
Cadmium (Cd)-Total	<0.0000026		0.0000026	mg/dm2.day	25-NOV-21	26-NOV-21	R5657864
Calcium (Ca)-Total	0.0107		0.0010	mg/dm2.day	25-NOV-21	26-NOV-21	R5657864
Chromium (Cr)-Total	<0.000026		0.000026	mg/dm2.day	25-NOV-21	26-NOV-21	R5657864
Cobalt (Co)-Total	<0.0000052		0.0000052	mg/dm2.day	25-NOV-21	26-NOV-21	R5657864
Copper (Cu)-Total	<0.000026		0.000026	mg/dm2.day	25-NOV-21	26-NOV-21	R5657864
Lead (Pb)-Total	0.0000061		0.0000026	mg/dm2.day	25-NOV-21	26-NOV-21	R5657864
Iron (Fe)-Total	0.0027		0.0015	mg/dm2.day	25-NOV-21	26-NOV-21	R5657864

* Refer to Referenced Information for Qualifiers (if any) and Methodology.

ALS ENVIRONMENTAL ANALYTICAL REPORT

Sample Details/Parameters	Result	Qualifier*	D.L.	Units	Extracted	Analyzed	Batch
L2660517-36 DUSTFALL-GALLINGER ROAD							
Sampled By: Client on 29-OCT-21							
Matrix: Dustfall							
Total Metals in Dustfalls by ICPMS							
Lithium (Li)-Total	<0.00026		0.00026	mg/dm2.day	25-NOV-21	26-NOV-21	R5657864
Magnesium (Mg)-Total	0.00255		0.00026	mg/dm2.day	25-NOV-21	26-NOV-21	R5657864
Manganese (Mn)-Total	0.000145		0.0000052	mg/dm2.day	25-NOV-21	26-NOV-21	R5657864
Molybdenum (Mo)-Total	<0.0000026		0.0000026	mg/dm2.day	25-NOV-21	26-NOV-21	R5657864
Nickel (Ni)-Total	0.000053		0.000026	mg/dm2.day	25-NOV-21	26-NOV-21	R5657864
Phosphorus (P)-Total	<0.0026		0.0026	mg/dm2.day	25-NOV-21	26-NOV-21	R5657864
Potassium (K)-Total	<0.0026		0.0026	mg/dm2.day	25-NOV-21	26-NOV-21	R5657864
Selenium (Se)-Total	<0.000052		0.000052	mg/dm2.day	25-NOV-21	26-NOV-21	R5657864
Silicon (Si)-Total	0.0036		0.0026	mg/dm2.day	25-NOV-21	26-NOV-21	R5657864
Silver (Ag)-Total	<0.00000052		0.00000052	mg/dm2.day	25-NOV-21	26-NOV-21	R5657864
Sodium (Na)-Total	<0.0026		0.0026	mg/dm2.day	25-NOV-21	26-NOV-21	R5657864
Strontium (Sr)-Total	0.0000271		0.0000052	mg/dm2.day	25-NOV-21	26-NOV-21	R5657864
Thallium (Tl)-Total	<0.0000052		0.0000052	mg/dm2.day	25-NOV-21	26-NOV-21	R5657864
Tin (Sn)-Total	<0.0000052		0.0000052	mg/dm2.day	25-NOV-21	26-NOV-21	R5657864
Titanium (Ti)-Total	<0.00052		0.00052	mg/dm2.day	25-NOV-21	26-NOV-21	R5657864
Uranium (U)-Total	<0.00000052		0.00000052	mg/dm2.day	25-NOV-21	26-NOV-21	R5657864
Vanadium (V)-Total	<0.000052		0.000052	mg/dm2.day	25-NOV-21	26-NOV-21	R5657864
Zinc (Zn)-Total	<0.00015		0.00015	mg/dm2.day	25-NOV-21	26-NOV-21	R5657864
L2660517-37 DUSTFALL-TAIT ROAD (SOUTH)							
Sampled By: Client on 29-OCT-21							
Matrix: Dustfall							
Dustfalls-Total, Soluble, Insoluble +FV							
Total Dustfall	0.40		0.11	mg/dm2.day		24-NOV-21	R5658015
Total Insoluble Dustfall	0.21		0.11	mg/dm2.day		24-NOV-21	R5658015
Total Soluble Dustfall	0.20		0.11	mg/dm2.day		24-NOV-21	R5658015
Fixed Dustfall	0.32		0.11	mg/dm2.day		24-NOV-21	R5658015
Fixed Insoluble Dustfall	0.18		0.11	mg/dm2.day		24-NOV-21	R5658015
Fixed Soluble Dustfall	0.13		0.11	mg/dm2.day		24-NOV-21	R5658015
Volatile Dustfall	<0.11		0.11	mg/dm2.day		24-NOV-21	R5658015
Volatile Insoluble Dustfall	<0.11		0.11	mg/dm2.day		24-NOV-21	R5658015
Volatile Soluble Dustfall	<0.11		0.11	mg/dm2.day		24-NOV-21	R5658015
Interval			1	days		24-NOV-21	R5656260
Mercury (Hg)-Total	<0.0000027		0.0000027	mg/dm2.day	24-NOV-21	24-NOV-21	R5656821
Total Metals in Dustfalls by ICPMS							
Aluminum (Al)-Total	0.00432		0.00016	mg/dm2.day	25-NOV-21	26-NOV-21	R5657864
Interval			1	days		25-NOV-21	R5656950
Antimony (Sb)-Total	<0.0000055		0.0000055	mg/dm2.day	25-NOV-21	26-NOV-21	R5657864
Arsenic (As)-Total	<0.0000055		0.0000055	mg/dm2.day	25-NOV-21	26-NOV-21	R5657864
Barium (Ba)-Total	0.0000496		0.0000027	mg/dm2.day	25-NOV-21	26-NOV-21	R5657864
Beryllium (Be)-Total	<0.000027		0.000027	mg/dm2.day	25-NOV-21	26-NOV-21	R5657864
Bismuth (Bi)-Total	<0.000027		0.000027	mg/dm2.day	25-NOV-21	26-NOV-21	R5657864
Boron (B)-Total	<0.00055		0.00055	mg/dm2.day	25-NOV-21	26-NOV-21	R5657864
Cadmium (Cd)-Total	<0.0000027		0.0000027	mg/dm2.day	25-NOV-21	26-NOV-21	R5657864
Calcium (Ca)-Total	0.0152		0.0011	mg/dm2.day	25-NOV-21	26-NOV-21	R5657864
Chromium (Cr)-Total	<0.000027		0.000027	mg/dm2.day	25-NOV-21	26-NOV-21	R5657864
Cobalt (Co)-Total	<0.0000055		0.0000055	mg/dm2.day	25-NOV-21	26-NOV-21	R5657864
Copper (Cu)-Total	0.000039		0.000027	mg/dm2.day	25-NOV-21	26-NOV-21	R5657864
Lead (Pb)-Total	0.0000096		0.0000027	mg/dm2.day	25-NOV-21	26-NOV-21	R5657864
Iron (Fe)-Total	0.0045		0.0016	mg/dm2.day	25-NOV-21	26-NOV-21	R5657864

* Refer to Referenced Information for Qualifiers (if any) and Methodology.

ALS ENVIRONMENTAL ANALYTICAL REPORT

Sample Details/Parameters	Result	Qualifier*	D.L.	Units	Extracted	Analyzed	Batch
L2660517-37 DUSTFALL-TAIT ROAD (SOUTH)							
Sampled By: Client on 29-OCT-21							
Matrix: Dustfall							
Total Metals in Dustfalls by ICPMS							
Lithium (Li)-Total	<0.00027		0.00027	mg/dm2.day	25-NOV-21	26-NOV-21	R5657864
Magnesium (Mg)-Total	0.00448		0.00027	mg/dm2.day	25-NOV-21	26-NOV-21	R5657864
Manganese (Mn)-Total	0.000285		0.0000055	mg/dm2.day	25-NOV-21	26-NOV-21	R5657864
Molybdenum (Mo)-Total	0.0000037		0.0000027	mg/dm2.day	25-NOV-21	26-NOV-21	R5657864
Nickel (Ni)-Total	0.000028		0.000027	mg/dm2.day	25-NOV-21	26-NOV-21	R5657864
Phosphorus (P)-Total	0.0080		0.0027	mg/dm2.day	25-NOV-21	26-NOV-21	R5657864
Potassium (K)-Total	0.0090		0.0027	mg/dm2.day	25-NOV-21	26-NOV-21	R5657864
Selenium (Se)-Total	<0.000055		0.000055	mg/dm2.day	25-NOV-21	26-NOV-21	R5657864
Silicon (Si)-Total	0.0062		0.0027	mg/dm2.day	25-NOV-21	26-NOV-21	R5657864
Silver (Ag)-Total	<0.00000055		0.00000055	mg/dm2.day	25-NOV-21	26-NOV-21	R5657864
Sodium (Na)-Total	<0.0027		0.0027	mg/dm2.day	25-NOV-21	26-NOV-21	R5657864
Strontium (Sr)-Total	0.0000420		0.0000055	mg/dm2.day	25-NOV-21	26-NOV-21	R5657864
Thallium (Tl)-Total	<0.0000055		0.0000055	mg/dm2.day	25-NOV-21	26-NOV-21	R5657864
Tin (Sn)-Total	<0.0000055		0.0000055	mg/dm2.day	25-NOV-21	26-NOV-21	R5657864
Titanium (Ti)-Total	<0.00055		0.00055	mg/dm2.day	25-NOV-21	26-NOV-21	R5657864
Uranium (U)-Total	<0.00000055		0.00000055	mg/dm2.day	25-NOV-21	26-NOV-21	R5657864
Vanadium (V)-Total	<0.000055		0.000055	mg/dm2.day	25-NOV-21	26-NOV-21	R5657864
Zinc (Zn)-Total	0.00022		0.00016	mg/dm2.day	25-NOV-21	26-NOV-21	R5657864
L2660517-38 DUSTFALL-NORTHWEST							
Sampled By: Client on 29-OCT-21							
Matrix: Dustfall							
Dustfalls-Total, Soluble, Insoluble +FV							
Total Dustfall	0.35		0.11	mg/dm2.day		24-NOV-21	R5658015
Total Insoluble Dustfall	0.17		0.11	mg/dm2.day		24-NOV-21	R5658015
Total Soluble Dustfall	0.17		0.11	mg/dm2.day		24-NOV-21	R5658015
Fixed Dustfall	0.26		0.11	mg/dm2.day		24-NOV-21	R5658015
Fixed Insoluble Dustfall	0.17		0.11	mg/dm2.day		24-NOV-21	R5658015
Fixed Soluble Dustfall	<0.11		0.11	mg/dm2.day		24-NOV-21	R5658015
Volatile Dustfall	<0.11		0.11	mg/dm2.day		24-NOV-21	R5658015
Volatile Insoluble Dustfall	<0.11		0.11	mg/dm2.day		24-NOV-21	R5658015
Volatile Soluble Dustfall	<0.11		0.11	mg/dm2.day		24-NOV-21	R5658015
Interval			1	days		24-NOV-21	R5656260
Mercury (Hg)-Total	<0.0000024		0.0000024	mg/dm2.day	24-NOV-21	24-NOV-21	R5656821
Total Metals in Dustfalls by ICPMS							
Aluminum (Al)-Total	0.00529		0.00015	mg/dm2.day	25-NOV-21	26-NOV-21	R5657864
Interval			1	days		25-NOV-21	R5656950
Antimony (Sb)-Total	<0.0000049		0.0000049	mg/dm2.day	25-NOV-21	26-NOV-21	R5657864
Arsenic (As)-Total	<0.0000049		0.0000049	mg/dm2.day	25-NOV-21	26-NOV-21	R5657864
Barium (Ba)-Total	0.0000519		0.0000024	mg/dm2.day	25-NOV-21	26-NOV-21	R5657864
Beryllium (Be)-Total	<0.000024		0.000024	mg/dm2.day	25-NOV-21	26-NOV-21	R5657864
Bismuth (Bi)-Total	<0.000024		0.000024	mg/dm2.day	25-NOV-21	26-NOV-21	R5657864
Boron (B)-Total	<0.00049		0.00049	mg/dm2.day	25-NOV-21	26-NOV-21	R5657864
Cadmium (Cd)-Total	<0.0000024		0.0000024	mg/dm2.day	25-NOV-21	26-NOV-21	R5657864
Calcium (Ca)-Total	0.0185		0.00098	mg/dm2.day	25-NOV-21	26-NOV-21	R5657864
Chromium (Cr)-Total	<0.000024		0.000024	mg/dm2.day	25-NOV-21	26-NOV-21	R5657864
Cobalt (Co)-Total	<0.0000049		0.0000049	mg/dm2.day	25-NOV-21	26-NOV-21	R5657864
Copper (Cu)-Total	0.000036		0.000024	mg/dm2.day	25-NOV-21	26-NOV-21	R5657864
Lead (Pb)-Total	0.0000054		0.0000024	mg/dm2.day	25-NOV-21	26-NOV-21	R5657864
Iron (Fe)-Total	0.0054		0.0015	mg/dm2.day	25-NOV-21	26-NOV-21	R5657864

* Refer to Referenced Information for Qualifiers (if any) and Methodology.

ALS ENVIRONMENTAL ANALYTICAL REPORT

Sample Details/Parameters	Result	Qualifier*	D.L.	Units	Extracted	Analyzed	Batch
L2660517-38 DUSTFALL-NORTHWEST							
Sampled By: Client on 29-OCT-21							
Matrix: Dustfall							
Total Metals in Dustfalls by ICPMS							
Lithium (Li)-Total	<0.00024		0.00024	mg/dm2.day	25-NOV-21	26-NOV-21	R5657864
Magnesium (Mg)-Total	0.00433		0.00024	mg/dm2.day	25-NOV-21	26-NOV-21	R5657864
Manganese (Mn)-Total	0.000225		0.0000049	mg/dm2.day	25-NOV-21	26-NOV-21	R5657864
Molybdenum (Mo)-Total	<0.0000024		0.0000024	mg/dm2.day	25-NOV-21	26-NOV-21	R5657864
Nickel (Ni)-Total	<0.000024		0.000024	mg/dm2.day	25-NOV-21	26-NOV-21	R5657864
Phosphorus (P)-Total	<0.0024		0.0024	mg/dm2.day	25-NOV-21	26-NOV-21	R5657864
Potassium (K)-Total	0.0027		0.0024	mg/dm2.day	25-NOV-21	26-NOV-21	R5657864
Selenium (Se)-Total	<0.000049		0.000049	mg/dm2.day	25-NOV-21	26-NOV-21	R5657864
Silicon (Si)-Total	0.0080		0.0024	mg/dm2.day	25-NOV-21	26-NOV-21	R5657864
Silver (Ag)-Total	<0.00000049		0.00000049	mg/dm2.day	25-NOV-21	26-NOV-21	R5657864
Sodium (Na)-Total	<0.0024		0.0024	mg/dm2.day	25-NOV-21	26-NOV-21	R5657864
Strontium (Sr)-Total	0.0000517		0.0000049	mg/dm2.day	25-NOV-21	26-NOV-21	R5657864
Thallium (Tl)-Total	<0.0000049		0.0000049	mg/dm2.day	25-NOV-21	26-NOV-21	R5657864
Tin (Sn)-Total	<0.0000049		0.0000049	mg/dm2.day	25-NOV-21	26-NOV-21	R5657864
Titanium (Ti)-Total	<0.00049		0.00049	mg/dm2.day	25-NOV-21	26-NOV-21	R5657864
Uranium (U)-Total	<0.00000049		0.00000049	mg/dm2.day	25-NOV-21	26-NOV-21	R5657864
Vanadium (V)-Total	<0.000049		0.000049	mg/dm2.day	25-NOV-21	26-NOV-21	R5657864
Zinc (Zn)-Total	<0.00015		0.00015	mg/dm2.day	25-NOV-21	26-NOV-21	R5657864

* Refer to Referenced Information for Qualifiers (if any) and Methodology.

Reference Information

Test Method References:

ALS Test Code	Matrix	Test Description	Method Reference**
AIR VOLUME-HIVOL-BU	Filter	Air volume (m3)	USEPA IO3.1
AIR VOLUME-M212 F-BU	Filter	Air volume (m3)	EPA QA Guidance Document 2.12
DUSTFALLS-ALL-DM2-VA	Dustfall	Dustfalls-Total, Soluble, Insoluble +FV	BC LAB MANUAL - PARTICULATE

This analysis is carried out using procedures modified from British Columbia Environmental Manual "Particulate."
Particulates or "Dustfalls" are determined gravimetrically. Total Insoluble and Soluble Dustfalls are determined by filtering a sample through a 0.45 um membrane filter and drying the filter and filtrate at 104 C, followed by ignition at 550 C. The remaining residue after 550 C represents the fixed portion and the weight lost on ignition represents the volatile portion. The sum of all fixed and volatile portions on both Insoluble and Soluble portions represents Total Dustfalls.

HG-DUST(DM2-CVAFS-VA	Dustfall	Total Mercury in Dustfalls by CVAFS	EPA 245.7

This analysis is carried out using procedures adapted from "Standard Methods for the Examination of Water and Wastewater" published by the American Public Health Association, and with procedures adapted from "Test Methods for Evaluating Solid Waste" SW-846 published by the United States Environmental Protection Agency (EPA). Instrumental analysis is by cold vapour atomic fluorescence spectrophotometry or atomic absorption spectrophotometry (EPA Method 245.7).

MET-DUST(DM2)-MS-VA	Dustfall	Total Metals in Dustfalls by ICPMS	EPA 6020A

This analysis is carried out using procedures adapted from "Standard Methods for the Examination of Water and Wastewater" published by the American Public Health Association, and with procedures adapted from "Test Methods for Evaluating Solid Waste" SW-846 published by the United States Environmental Protection Agency (EPA). Instrumental analysis is by inductively coupled plasma - mass spectrometry (EPA Method 6020A).

MET-IO3.5-MS-BU	Filter	Metals on High Volume Filter by ICPMS	IO3.5

After weighing (if required), hivol filters are sub-sampled and leached with nitric acid to extract available metal analytes. After dilution, the extracts are submitted to the ICPMS instrument for analysis.

PART-HIVOL-GRAV-BU	Filter	Particulate on High Volume Filter	USEPA IO3.1
PART-M212 F-GRAV-BU	Filter	PM via Gravimetric Analysis	EPA QA Guidance Document 2.12

The particulate matter collected onto tare-weighed 47mm Teflon Disc filter media is desiccated then brought to a constant weight on an analytical balance. Results are presented in ug (per filter). An air volume can be included to allow for reporting in ug/m3.

** ALS test methods may incorporate modifications from specified reference methods to improve performance.

The last two letters of the above test code(s) indicate the laboratory that performed analytical analysis for that test. Refer to the list below:

Laboratory Definition Code	Laboratory Location
BU	ALS ENVIRONMENTAL - BURLINGTON, ONTARIO, CANADA
VA	ALS ENVIRONMENTAL - VANCOUVER, BRITISH COLUMBIA, CANADA

Chain of Custody Numbers:

GLOSSARY OF REPORT TERMS

Surrogates are compounds that are similar in behaviour to target analyte(s), but that do not normally occur in environmental samples. For applicable tests, surrogates are added to samples prior to analysis as a check on recovery. In reports that display the D.L. column, laboratory objectives for surrogates are listed there.
mg/kg - milligrams per kilogram based on dry weight of sample
mg/kg wwt - milligrams per kilogram based on wet weight of sample
mg/kg lwt - milligrams per kilogram based on lipid-adjusted weight
mg/L - unit of concentration based on volume, parts per million.
< - Less than.
D.L. - The reporting limit.
N/A - Result not available. Refer to qualifier code and definition for explanation.

Test results reported relate only to the samples as received by the laboratory.
UNLESS OTHERWISE STATED, ALL SAMPLES WERE RECEIVED IN ACCEPTABLE CONDITION.
Analytical results in unsigned test reports with the DRAFT watermark are subject to change, pending final QC review.

Quality Control Report

Workorder: L2660517 Report Date: 03-DEC-21

Client: New Gold Inc. Rainy River Project
5967 Highway 11/71 P.O. Box 5
Emo ON P0W 1E0

Contact: Sarah Flesher

Test	Matrix	Reference	Result	Qualifier	Units	RPD	Limit	Analyzed
MET-IO3.5-MS-BU	**Filter**							
Batch R5658124								
WG3665928-3 DUP		**L2660517-1**						
Arsenic (As)		<3.0	<3.0	RPD-NA	ug	N/A	20	25-NOV-21
Cadmium (Cd)		<2.0	<2.0	RPD-NA	ug	N/A	20	25-NOV-21
Cobalt (Co)		<2.0	<2.0	RPD-NA	ug	N/A	20	25-NOV-21
Chromium (Cr)		<5.0	<5.0	RPD-NA	ug	N/A	20	25-NOV-21
Copper (Cu)		90.9	104		ug	13	20	25-NOV-21
Iron (Fe)		783	828		ug	5.6	25	25-NOV-21
Manganese (Mn)		26.4	28.5		ug	7.7	20	25-NOV-21
Nickel (Ni)		<3.0	<3.0	RPD-NA	ug	N/A	20	25-NOV-21
Lead (Pb)		<3.0	<3.0	RPD-NA	ug	N/A	20	25-NOV-21
Selenium (Se)		<10	<10	RPD-NA	ug	N/A	20	25-NOV-21
Vanadium (V)		<5.0	<5.0	RPD-NA	ug	N/A	20	25-NOV-21
Zinc (Zn)		29.7	35.9		ug	19	20	25-NOV-21
WG3665928-2 LCS								
Arsenic (As)			102.0		%		80-120	25-NOV-21
Cadmium (Cd)			110.2		%		80-120	25-NOV-21
Cobalt (Co)			102.0		%		80-120	25-NOV-21
Chromium (Cr)			101.0		%		80-120	25-NOV-21
Copper (Cu)			90.1		%		80-120	25-NOV-21
Iron (Fe)			104.2		%		80-120	25-NOV-21
Manganese (Mn)			100.0		%		80-120	25-NOV-21
Nickel (Ni)			103.0		%		80-120	25-NOV-21
Lead (Pb)			108.0		%		80-120	25-NOV-21
Selenium (Se)			108.0		%		80-120	25-NOV-21
Vanadium (V)			103.0		%		80-120	25-NOV-21
Zinc (Zn)			105.5		%		80-120	25-NOV-21
WG3665928-1 MB								
Arsenic (As)			<3.0		ug		3	25-NOV-21
Cadmium (Cd)			<0.027		ug		0.027	25-NOV-21
Cobalt (Co)			<0.030		ug		0.03	25-NOV-21
Chromium (Cr)			<3.4		ug		3.4	25-NOV-21
Copper (Cu)			<1.0		ug		1	25-NOV-21
Iron (Fe)			<12		ug		12	25-NOV-21
Manganese (Mn)			<0.45		ug		0.45	25-NOV-21
Nickel (Ni)			<0.25		ug		0.25	25-NOV-21
Lead (Pb)			<0.12		ug		0.12	25-NOV-21

Quality Control Report

Test	Matrix	Reference	Result	Qualifier	Units	RPD	Limit	Analyzed
MET-IO3.5-MS-BU	**Filter**							
Batch R5658124								
WG3665928-1 MB								
Selenium (Se)			<1.3		ug		1.25	25-NOV-21
Vanadium (V)			<5.0		ug		10	25-NOV-21
Zinc (Zn)			<4.5		ug		4.5	25-NOV-21
WG3665928-4 MS		**L2660517-1**						
Arsenic (As)			98.4		%		75-125	25-NOV-21
Cadmium (Cd)			103.9		%		75-125	25-NOV-21
Cobalt (Co)			97.8		%		75-125	25-NOV-21
Chromium (Cr)			99.6		%		75-125	25-NOV-21
Copper (Cu)			N/A	MS-B	%		-	25-NOV-21
Iron (Fe)			N/A	MS-B	%		-	25-NOV-21
Manganese (Mn)			112.3		%		75-125	25-NOV-21
Nickel (Ni)			98.5		%		75-125	25-NOV-21
Lead (Pb)			106.4		%		75-125	25-NOV-21
Selenium (Se)			103.9		%		75-125	25-NOV-21
Vanadium (V)			98.9		%		75-125	25-NOV-21
Zinc (Zn)			113.5		%		75-125	25-NOV-21
PART-HIVOL-GRAV-BU	**Filter**							
Batch R5656955								
WG3662713-2 DUP		**L2660517-1**						
Total particulate		61500	61100		ug	0.7	5	22-NOV-21
WG3662713-1 MB								
Total particulate			<100		ug		100	22-NOV-21
PART-M212 F-GRAV-BU	**Filter**							
Batch R5659152								
WG3667204-3 DUP		**L2660517-17**						
Total particulate		256	253		ug	1.2	10	30-NOV-21
WG3667204-1 MB								
Total particulate			<15		ug		15	30-NOV-21
WG3667204-2 MB								
Total particulate			<15		ug		15	30-NOV-21
DUSTFALLS-ALL-DM2-VA	**Dustfall**							
Batch R5658015								
WG3664184-1 MB								
Total Dustfall			<0.10		mg/dm2.day		0.1	24-NOV-21
Total Insoluble Dustfall			<0.10		mg/dm2.day		0.1	24-NOV-21

Quality Control Report

Test	Matrix	Reference	Result	Qualifier	Units	RPD	Limit	Analyzed
DUSTFALLS-ALL-DM2-VA	**Dustfall**							
Batch R5658015								
WG3664184-1 MB								
Total Soluble Dustfall			<0.10		mg/dm2.day		0.1	24-NOV-21
Fixed Dustfall			<0.10		mg/dm2.day		0.1	24-NOV-21
Fixed Insoluble Dustfall			<0.10		mg/dm2.day		0.1	24-NOV-21
Fixed Soluble Dustfall			<0.10		mg/dm2.day		0.1	24-NOV-21
Volatile Dustfall			<0.10		mg/dm2.day		0.1	24-NOV-21
Volatile Insoluble Dustfall			<0.10		mg/dm2.day		0.1	24-NOV-21
Volatile Soluble Dustfall			<0.10		mg/dm2.day		0.1	24-NOV-21
HG-DUST(DM2-CVAFS-VA	**Dustfall**							
Batch R5656821								
WG3663886-3 DUP		**L2660517-28**						
Mercury (Hg)-Total		<0.0000016	<0.0000016	RPD-NA	mg/dm2.day	N/A	20	24-NOV-21
WG3663886-2 LCS								
Mercury (Hg)-Total			90.7		%		70-130	24-NOV-21
WG3663886-1 MB								
Mercury (Hg)-Total			<0.0000013		mg/dm2.day		0.0000013	24-NOV-21
MET-DUST(DM2)-MS-VA	**Dustfall**							
Batch R5657864								
WG3663885-3 DUP		**L2660517-28**						
Aluminum (Al)-Total		0.0189	0.0175		mg/dm2.day	7.2	20	26-NOV-21
Antimony (Sb)-Total		0.0000035	0.0000039		mg/dm2.day	11	20	26-NOV-21
Arsenic (As)-Total		0.0000087	0.0000085		mg/dm2.day	2.9	20	26-NOV-21
Barium (Ba)-Total		0.0000946	0.0000926		mg/dm2.day	2.1	20	26-NOV-21
Beryllium (Be)-Total		<0.000016	<0.000016	RPD-NA	mg/dm2.day	N/A	20	26-NOV-21
Bismuth (Bi)-Total		<0.000016	<0.000016	RPD-NA	mg/dm2.day	N/A	20	26-NOV-21
Boron (B)-Total		<0.00032	<0.00032	RPD-NA	mg/dm2.day	N/A	20	26-NOV-21
Cadmium (Cd)-Total		0.0000018	0.0000020		mg/dm2.day	10	20	26-NOV-21
Calcium (Ca)-Total		0.0362	0.0353		mg/dm2.day	2.5	20	26-NOV-21
Chromium (Cr)-Total		0.000018	0.000018		mg/dm2.day	0.0	20	26-NOV-21
Cobalt (Co)-Total		0.0000039	0.0000037		mg/dm2.day	6.8	20	26-NOV-21
Copper (Cu)-Total		0.000089	0.000087		mg/dm2.day	2.7	20	26-NOV-21
Lead (Pb)-Total		0.0000617	0.0000516		mg/dm2.day	18	20	26-NOV-21
Iron (Fe)-Total		0.0141	0.0134		mg/dm2.day	5.0	20	26-NOV-21
Lithium (Li)-Total		<0.00016	<0.00016	RPD-NA	mg/dm2.day	N/A	20	26-NOV-21
Magnesium (Mg)-Total		0.00965	0.00923		mg/dm2.day	4.4	20	26-NOV-21
Manganese (Mn)-Total		0.000817	0.000784		mg/dm2.day	4.1	20	26-NOV-21

Quality Control Report

Test	Matrix	Reference	Result	Qualifier	Units	RPD	Limit	Analyzed
MET-DUST(DM2)-MS-VA	**Dustfall**							
Batch R5657864								
WG3663885-3 DUP		**L2660517-28**						
Molybdenum (Mo)-Total		0.0000029	0.0000032		mg/dm2.day	8.0	20	26-NOV-21
Nickel (Ni)-Total		0.000016	<0.000016	RPD-NA	mg/dm2.day	N/A	20	26-NOV-21
Phosphorus (P)-Total		<0.0016	<0.0016	RPD-NA	mg/dm2.day	N/A	20	26-NOV-21
Potassium (K)-Total		0.0052	0.0048		mg/dm2.day	8.9	20	26-NOV-21
Selenium (Se)-Total		<0.000032	<0.000032	RPD-NA	mg/dm2.day	N/A	20	26-NOV-21
Silicon (Si)-Total		0.0217	0.0201		mg/dm2.day	7.6	20	26-NOV-21
Silver (Ag)-Total		0.00000218	0.00000212		mg/dm2.day	2.7	20	26-NOV-21
Sodium (Na)-Total		0.0033	0.0030		mg/dm2.day	11	20	26-NOV-21
Strontium (Sr)-Total		0.000101	0.0000945		mg/dm2.day	6.6	20	26-NOV-21
Thallium (Tl)-Total		<0.0000032	<0.0000032	RPD-NA	mg/dm2.day	N/A	20	26-NOV-21
Tin (Sn)-Total		<0.0000032	<0.0000032	RPD-NA	mg/dm2.day	N/A	20	26-NOV-21
Titanium (Ti)-Total		<0.00032	<0.00032	RPD-NA	mg/dm2.day	N/A	20	26-NOV-21
Uranium (U)-Total		<0.00000032	<0.0000003	RPD-NA	mg/dm2.day	N/A	20	26-NOV-21
Vanadium (V)-Total		<0.000032	<0.000032	RPD-NA	mg/dm2.day	N/A	20	26-NOV-21
Zinc (Zn)-Total		0.000545	0.000514		mg/dm2.day	5.7	20	26-NOV-21
WG3663885-2 LCS								
Aluminum (Al)-Total			100.1		%		80-120	26-NOV-21
Antimony (Sb)-Total			102.4		%		80-120	26-NOV-21
Arsenic (As)-Total			99.4		%		80-120	26-NOV-21
Barium (Ba)-Total			102.3		%		80-120	26-NOV-21
Beryllium (Be)-Total			96.4		%		80-120	26-NOV-21
Bismuth (Bi)-Total			95.9		%		80-120	26-NOV-21
Boron (B)-Total			83.0		%		80-120	26-NOV-21
Cadmium (Cd)-Total			102.2		%		80-120	26-NOV-21
Calcium (Ca)-Total			95.3		%		80-120	26-NOV-21
Chromium (Cr)-Total			102.9		%		80-120	26-NOV-21
Cobalt (Co)-Total			100.7		%		80-120	26-NOV-21
Copper (Cu)-Total			97.8		%		80-120	26-NOV-21
Lead (Pb)-Total			97.7		%		80-120	26-NOV-21
Iron (Fe)-Total			104.6		%		80-120	26-NOV-21
Lithium (Li)-Total			93.0		%		80-120	26-NOV-21
Magnesium (Mg)-Total			104.4		%		80-120	26-NOV-21
Manganese (Mn)-Total			102.9		%		80-120	26-NOV-21
Molybdenum (Mo)-Total			102.2		%		80-120	26-NOV-21

Quality Control Report

Test	Matrix	Reference	Result	Qualifier	Units	RPD	Limit	Analyzed
MET-DUST(DM2)-MS-VA	**Dustfall**							
Batch R5657864								
WG3663885-2 LCS								
Nickel (Ni)-Total			99.3		%		80-120	26-NOV-21
Phosphorus (P)-Total			99.1		%		80-120	26-NOV-21
Potassium (K)-Total			102.7		%		80-120	26-NOV-21
Selenium (Se)-Total			103.8		%		80-120	26-NOV-21
Silicon (Si)-Total			91.4		%		80-120	26-NOV-21
Silver (Ag)-Total			92.2		%		80-120	26-NOV-21
Sodium (Na)-Total			100.9		%		80-120	26-NOV-21
Strontium (Sr)-Total			101.5		%		80-120	26-NOV-21
Thallium (Tl)-Total			94.8		%		80-120	26-NOV-21
Tin (Sn)-Total			100.4		%		80-120	26-NOV-21
Titanium (Ti)-Total			96.3		%		80-120	26-NOV-21
Uranium (U)-Total			105.1		%		80-120	26-NOV-21
Vanadium (V)-Total			103.8		%		80-120	26-NOV-21
Zinc (Zn)-Total			98.2		%		80-120	26-NOV-21
WG3663885-1 MB								
Aluminum (Al)-Total			<0.000079		mg/dm2.day		0.000079	26-NOV-21
Antimony (Sb)-Total			<0.0000026		mg/dm2.day		0.0000026	26-NOV-21
Arsenic (As)-Total			<0.0000026		mg/dm2.day		0.0000026	26-NOV-21
Barium (Ba)-Total			<0.0000013		mg/dm2.day		0.0000013	26-NOV-21
Beryllium (Be)-Total			<0.000013		mg/dm2.day		0.000013	26-NOV-21
Bismuth (Bi)-Total			<0.000013		mg/dm2.day		0.000013	26-NOV-21
Boron (B)-Total			<0.00026		mg/dm2.day		0.00026	26-NOV-21
Cadmium (Cd)-Total			<0.0000013		mg/dm2.day		0.0000013	26-NOV-21
Calcium (Ca)-Total			<0.00052		mg/dm2.day		0.00052	26-NOV-21
Chromium (Cr)-Total			<0.000013		mg/dm2.day		0.000013	26-NOV-21
Cobalt (Co)-Total			<0.0000026		mg/dm2.day		0.0000026	26-NOV-21
Copper (Cu)-Total			<0.000013		mg/dm2.day		0.000013	26-NOV-21
Lead (Pb)-Total			<0.0000013		mg/dm2.day		0.0000013	26-NOV-21
Iron (Fe)-Total			<0.00079		mg/dm2.day		0.00079	26-NOV-21
Lithium (Li)-Total			<0.00013		mg/dm2.day		0.00013	26-NOV-21
Magnesium (Mg)-Total			<0.00013		mg/dm2.day		0.00013	26-NOV-21
Manganese (Mn)-Total			<0.0000026		mg/dm2.day		0.0000026	26-NOV-21
Molybdenum (Mo)-Total			<0.0000013		mg/dm2.day		0.0000013	26-NOV-21
Nickel (Ni)-Total			<0.000013		mg/dm2.day		0.000013	26-NOV-21

Quality Control Report

Test	Matrix	Reference	Result	Qualifier	Units	RPD	Limit	Analyzed
MET-DUST(DM2)-MS-VA	**Dustfall**							
Batch R5657864								
WG3663885-1 MB								
Phosphorus (P)-Total			<0.0013		mg/dm2.day		0.0013	26-NOV-21
Potassium (K)-Total			<0.0013		mg/dm2.day		0.0013	26-NOV-21
Selenium (Se)-Total			<0.000026		mg/dm2.day		0.000026	26-NOV-21
Silicon (Si)-Total			<0.0013		mg/dm2.day		0.0013	26-NOV-21
Silver (Ag)-Total			<0.0000002		mg/dm2.day		0.00000026	26-NOV-21
Sodium (Na)-Total			<0.0013		mg/dm2.day		0.0013	26-NOV-21
Strontium (Sr)-Total			<0.0000026		mg/dm2.day		0.0000026	26-NOV-21
Thallium (Tl)-Total			<0.0000026		mg/dm2.day		0.0000026	26-NOV-21
Tin (Sn)-Total			<0.0000026		mg/dm2.day		0.0000026	26-NOV-21
Titanium (Ti)-Total			<0.00026		mg/dm2.day		0.00026	26-NOV-21
Uranium (U)-Total			<0.0000002		mg/dm2.day		0.00000026	26-NOV-21
Vanadium (V)-Total			<0.000026		mg/dm2.day		0.000026	26-NOV-21
Zinc (Zn)-Total			<0.000079		mg/dm2.day		0.000079	26-NOV-21

Quality Control Report

Legend:

Limit	ALS Control Limit (Data Quality Objectives)
DUP	Duplicate
RPD	Relative Percent Difference
N/A	Not Available
LCS	Laboratory Control Sample
SRM	Standard Reference Material
MS	Matrix Spike
MSD	Matrix Spike Duplicate
ADE	Average Desorption Efficiency
MB	Method Blank
IRM	Internal Reference Material
CRM	Certified Reference Material
CCV	Continuing Calibration Verification
CVS	Calibration Verification Standard
LCSD	Laboratory Control Sample Duplicate

Sample Parameter Qualifier Definitions:

Qualifier	Description
MS-B	Matrix Spike recovery could not be accurately calculated due to high analyte background in sample.
RPD-NA	Relative Percent Difference Not Available due to result(s) being less than detection limit.

Hold Time Exceedances:

All test results reported with this submission were conducted within ALS recommended hold times.

ALS recommended hold times may vary by province. They are assigned to meet known provincial and/or federal government requirements. In the absence of regulatory hold times, ALS establishes recommendations based on guidelines published by the US EPA, APHA Standard Methods, or Environment Canada (where available). For more information, please contact ALS.

The ALS Quality Control Report is provided to ALS clients upon request. ALS includes comprehensive QC checks with every analysis to ensure our high standards of quality are met. Each QC result has a known or expected target value, which is compared against pre-determined data quality objectives to provide confidence in the accuracy of associated test results.

Please note that this report may contain QC results from anonymous Sample Duplicates and Matrix Spikes that do not originate from this Work Order.

L2660517-COFC

ALS Environmental

Chain of Custody / Analytical Request Form
1435 Norjohn Court, Unit 1, Burlington, Ontario, Canada, L7L 0E6
Tel +1-905-331-3111 Fax +1-905-331-4567 www.alsglobal.com

Pa

Report To		Report Format / Distribution		Service Requested
Company:	New Gold Inc.	☑ Standard ☐ Other:		☑ Regular Service
Contact:	Sarah Flesher	☑ PDF ☑ Excel ☐ Digital ☐ Fax		☐ Rush Service (with prior consultation) - surcharge applies
Address:	24 Marr Rd. Barwick ON P0W 1A0	Email 1:	sarah.flesher@newgold.com	☐ Other - Please contact ALS
Phone:	807-234-8200 ext. 8049 Fax:	Email 2:		
Invoice To	Same as Report ? ☑ Yes ☐ No	Client / Project Information		
Company:		Job #:	Air Quality	
Contact:		Location:		
Address:		PO:	450000093	
Phone:	Fax:	Sampled by:		
Lab Work Order #		ALS Contact:		

Analysis Request

Sample #	Sample Identification (This description will appear on the report)	Date (dd-mmm-yy)	Time (hh:mm)	Sample Type	TSP and Metals	Pm 2.5	Dustfall Incl. volatile								Hazardous? Provide Date
1	SOUTH-TSP-386	1-Oct-2021	12:00	Air	X										
2	SOUTH-TSP-387	7-Oct-2021	12:00	Air	X										
3	SOUTH-TSP-388	13-Oct-2021	12:00	Air	X										
4	SOUTH-TSP-389	19-Oct-2021	12:00	Air	X										
5	SOUTH-TSP-390	25-Oct-2021	12:00	Air	X										
6	NORTH-TSP-386	1-Oct-2021	12:00	Air	X										
7	NORTH-TSP-387	7-Oct-2021	12:00	Air	X										
8	NORTH-TSP-388	13-Oct-2021	12:00	Air	X										
9	NORTH-TSP-389	19-Oct-2021	12:00	Air	X										
10	NORTH-TSP-390	25-Oct-2021	12:00	Air	X										
11	NORTHWEST-TSP-386	1-Oct-2021	12:00	Air	X										
12	NORTHWEST-TSP-387	7-Oct-2021	12:00	Air	X										
13	NORTHWEST-TSP-388	13-Oct-2021	12:00	Air	X										
14	NORTHWEST-TSP-389	19-Oct-2021	12:00	Air	X										
15	NORTHWEST-TSP-390	25-Oct-2021	12:00	Air	X										
17	SOUTH-PM2.5-386	1-Oct-2021	12:00	Air		X									
18	SOUTH-PM2.5-387	7-Oct-2021	12:00	Air		X									
19	SOUTH-PM2.5-388	13-Oct-2021	12:00	Air		X									
20	SOUTH-PM2.5-389	19-Oct-2021	12:00	Air		X									
21	SOUTH-PM2.5-390	25-Oct-2021	12:00	Air		X									
22	NORTH-PM2.5-386	1-Oct-2021	12:00	Air		X									
23	NORTH-PM2.5-387	7-Oct-2021	12:00	Air		X									
24	NORTH-PM2.5-388	13-Oct-2021	12:00	Air		X									
25	NORTH-PM2.5-389	19-Oct-2021	12:00	Air		X									
26	NORTH-PM2.5-390	25-Oct-2021	12:00	Air		X									
16	TSP Travel Blank	5-Nov-2021	12:00	Air	X										
27	PM2.5 Travel Blank	5-Nov-2021	12:00	Air		X									
28	NOP1-Dustfall-10	29-Oct-2021	12:00	Air			X								
29	CP1-Dustfall-10	29-Oct-2021	12:00	Air			X								
30	WCP1-Dustfall-10	29-Oct-2021	12:00	Air			X								
31	GH1-Dustfall-10	29-Oct-2021	12:00	Air			X								
32	SPP1-Dustfall-42	13-Oct-2021	12:00	Air			X								
33	SPP1-Dustfall-43	20-Oct-2021	12:00	Air			X								
34	SPP1-Dustfall-44	27-Oct-2021	12:00	Air			X								
35	SPP1-Dustfall-45	3-Nov-2021	12:00	Air			X								
36	Dustfall - Gallinger Road	29-Oct-2021	12:00	Air			X								
37	Dustfall - Tait Road (South)	29-Oct-2021	12:00	Air			X								
38	Dustfall- Northwest	29-Oct-2021	12:00	Air			X								

Special Instructions / Regulations / Hazardous Details

Please Note: Dustfall canisters are empty/ only partially full, please follow-through with sample analysis

By the use of this form the user acknowledges and agrees with the Terms and Conditions as provided by ALS

Released by:	Date (dd-mmm-yy)	Time (hh-mm)	Received by:	Date:	Time:	Temperature:	Verified by:	Date:	Time:	Obs
	5-Nov-2021	11:00	AARA BULTAU	8-NOV 2021	11:00	20.4 °C				Yes If Ye

New Gold Inc. Rainy River Project
ATTN: Sarah Flesher
5967 Highway 11/71
P.O. Box 5
Emo ON P0W 1E0

Date Received: 09-DEC-21
Report Date: 21-JAN-22 10:05 (MT)
Version: FINAL

Client Phone: 807-234-8200

Certificate of Analysis

Lab Work Order #: L2670874
Project P.O. #: 4500050093
Job Reference:
C of C Numbers:
Legal Site Desc:

Claire Kocharakkal, B.Sc.
Account Manager

[This report shall not be reproduced except in full without the written authority of the Laboratory.]

ADDRESS: 1435 Norjohn Court, Unit 1, Burlington, ON, L7L 0E6 Canada | Phone: +1 905 331 3111 | Fax: +1 905 331 4567
ALS CANADA LTD Part of the ALS Group An ALS Limited Company

ALS ENVIRONMENTAL ANALYTICAL REPORT

Sample Details/Parameters	Result	Qualifier*	D.L.	Units	Extracted	Analyzed	Batch
L2670874-1 SOUTH-TSP-391							
Sampled By: Client on 31-OCT-21							
Matrix: Hi Vol Filter							
Miscellaneous Parameters							
Total particulate	2400		2300	ug		20-DEC-21	R5682100
Metals on High Volume Filter by ICPMS							
Arsenic (As)	<3.0		3.0	ug	21-DEC-21	22-DEC-21	R5682784
Cadmium (Cd)	<2.0		2.0	ug	21-DEC-21	22-DEC-21	R5682784
Cobalt (Co)	<2.0		2.0	ug	21-DEC-21	22-DEC-21	R5682784
Chromium (Cr)	<5.0		5.0	ug	21-DEC-21	22-DEC-21	R5682784
Copper (Cu)	49.1		4.0	ug	21-DEC-21	22-DEC-21	R5682784
Iron (Fe)	110		20	ug	21-DEC-21	22-DEC-21	R5682784
Manganese (Mn)	2.8		1.0	ug	21-DEC-21	22-DEC-21	R5682784
Nickel (Ni)	<3.0		3.0	ug	21-DEC-21	22-DEC-21	R5682784
Lead (Pb)	<3.0		3.0	ug	21-DEC-21	22-DEC-21	R5682784
Selenium (Se)	<10		10	ug	21-DEC-21	22-DEC-21	R5682784
Vanadium (V)	<5.0		5.0	ug	21-DEC-21	22-DEC-21	R5682784
Zinc (Zn)	6.8		5.0	ug	21-DEC-21	22-DEC-21	R5682784
L2670874-2 SOUTH-TSP-392							
Sampled By: Client on 06-NOV-21							
Matrix: Hi Vol Filter							
Miscellaneous Parameters							
Total particulate	<2300		2300	ug		20-DEC-21	R5682100
Metals on High Volume Filter by ICPMS							
Arsenic (As)	<3.0		3.0	ug	21-DEC-21	22-DEC-21	R5682784
Cadmium (Cd)	<2.0		2.0	ug	21-DEC-21	22-DEC-21	R5682784
Cobalt (Co)	<2.0		2.0	ug	21-DEC-21	22-DEC-21	R5682784
Chromium (Cr)	<5.0		5.0	ug	21-DEC-21	22-DEC-21	R5682784
Copper (Cu)	<4.0		4.0	ug	21-DEC-21	22-DEC-21	R5682784
Iron (Fe)	54		20	ug	21-DEC-21	22-DEC-21	R5682784
Manganese (Mn)	1.5		1.0	ug	21-DEC-21	22-DEC-21	R5682784
Nickel (Ni)	<3.0		3.0	ug	21-DEC-21	22-DEC-21	R5682784
Lead (Pb)	<3.0		3.0	ug	21-DEC-21	22-DEC-21	R5682784
Selenium (Se)	<10		10	ug	21-DEC-21	22-DEC-21	R5682784
Vanadium (V)	<5.0		5.0	ug	21-DEC-21	22-DEC-21	R5682784
Zinc (Zn)	<5.0		5.0	ug	21-DEC-21	22-DEC-21	R5682784
L2670874-3 SOUTH-TSP-393							
Sampled By: Client on 12-NOV-21							
Matrix: Hi Vol Filter							
Miscellaneous Parameters							
Total particulate	48400		2300	ug		20-DEC-21	R5682100
Metals on High Volume Filter by ICPMS							
Arsenic (As)	<3.0		3.0	ug	21-DEC-21	22-DEC-21	R5682784
Cadmium (Cd)	<2.0		2.0	ug	21-DEC-21	22-DEC-21	R5682784
Cobalt (Co)	<2.0		2.0	ug	21-DEC-21	22-DEC-21	R5682784
Chromium (Cr)	<5.0		5.0	ug	21-DEC-21	22-DEC-21	R5682784
Copper (Cu)	90.9		4.0	ug	21-DEC-21	22-DEC-21	R5682784
Iron (Fe)	833		20	ug	21-DEC-21	22-DEC-21	R5682784
Manganese (Mn)	27.2		1.0	ug	21-DEC-21	22-DEC-21	R5682784
Nickel (Ni)	4.0		3.0	ug	21-DEC-21	22-DEC-21	R5682784
Lead (Pb)	5.2		3.0	ug	21-DEC-21	22-DEC-21	R5682784
Selenium (Se)	<10		10	ug	21-DEC-21	22-DEC-21	R5682784
Vanadium (V)	<5.0		5.0	ug	21-DEC-21	22-DEC-21	R5682784
Zinc (Zn)	70.2		5.0	ug	21-DEC-21	22-DEC-21	R5682784

* Refer to Referenced Information for Qualifiers (if any) and Methodology.

ALS ENVIRONMENTAL ANALYTICAL REPORT

Sample Details/Parameters	Result	Qualifier*	D.L.	Units	Extracted	Analyzed	Batch
L2670874-4 SOUTH-TSP-394							
Sampled By: Client on 18-NOV-21							
Matrix: Hi Vol Filter							
Miscellaneous Parameters							
Total particulate	14200		2300	ug		20-DEC-21	R5682100
Metals on High Volume Filter by ICPMS							
Arsenic (As)	<3.0		3.0	ug	21-DEC-21	22-DEC-21	R5682784
Cadmium (Cd)	<2.0		2.0	ug	21-DEC-21	22-DEC-21	R5682784
Cobalt (Co)	<2.0		2.0	ug	21-DEC-21	22-DEC-21	R5682784
Chromium (Cr)	<5.0		5.0	ug	21-DEC-21	22-DEC-21	R5682784
Copper (Cu)	153		4.0	ug	21-DEC-21	22-DEC-21	R5682784
Iron (Fe)	293		20	ug	21-DEC-21	22-DEC-21	R5682784
Manganese (Mn)	7.7		1.0	ug	21-DEC-21	22-DEC-21	R5682784
Nickel (Ni)	<3.0		3.0	ug	21-DEC-21	22-DEC-21	R5682784
Lead (Pb)	<3.0		3.0	ug	21-DEC-21	22-DEC-21	R5682784
Selenium (Se)	<10		10	ug	21-DEC-21	22-DEC-21	R5682784
Vanadium (V)	<5.0		5.0	ug	21-DEC-21	22-DEC-21	R5682784
Zinc (Zn)	25.6		5.0	ug	21-DEC-21	22-DEC-21	R5682784
L2670874-5 SOUTH-TSP-395							
Sampled By: Client on 24-NOV-21							
Matrix: Hi Vol Filter							
Miscellaneous Parameters							
Total particulate	102000		2300	ug		20-DEC-21	R5682100
Metals on High Volume Filter by ICPMS							
Arsenic (As)	3.0		3.0	ug	21-DEC-21	22-DEC-21	R5682784
Cadmium (Cd)	<2.0		2.0	ug	21-DEC-21	22-DEC-21	R5682784
Cobalt (Co)	<2.0		2.0	ug	21-DEC-21	22-DEC-21	R5682784
Chromium (Cr)	<5.0		5.0	ug	21-DEC-21	22-DEC-21	R5682784
Copper (Cu)	129		4.0	ug	21-DEC-21	22-DEC-21	R5682784
Iron (Fe)	1530		20	ug	21-DEC-21	22-DEC-21	R5682784
Manganese (Mn)	68.4		1.0	ug	21-DEC-21	22-DEC-21	R5682784
Nickel (Ni)	3.4		3.0	ug	21-DEC-21	22-DEC-21	R5682784
Lead (Pb)	7.2		3.0	ug	21-DEC-21	22-DEC-21	R5682784
Selenium (Se)	<10		10	ug	21-DEC-21	22-DEC-21	R5682784
Vanadium (V)	<5.0		5.0	ug	21-DEC-21	22-DEC-21	R5682784
Zinc (Zn)	69.3		5.0	ug	21-DEC-21	22-DEC-21	R5682784
L2670874-6 SOUTH-TSP-396							
Sampled By: Client on 30-NOV-21							
Matrix: Hi Vol Filter							
Miscellaneous Parameters							
Total particulate	3800		2300	ug		20-DEC-21	R5682100
Metals on High Volume Filter by ICPMS							
Arsenic (As)	<3.0		3.0	ug	21-DEC-21	22-DEC-21	R5682784
Cadmium (Cd)	<2.0		2.0	ug	21-DEC-21	22-DEC-21	R5682784
Cobalt (Co)	<2.0		2.0	ug	21-DEC-21	22-DEC-21	R5682784
Chromium (Cr)	<5.0		5.0	ug	21-DEC-21	22-DEC-21	R5682784
Copper (Cu)	130		4.0	ug	21-DEC-21	22-DEC-21	R5682784
Iron (Fe)	128		20	ug	21-DEC-21	22-DEC-21	R5682784
Manganese (Mn)	4.6		1.0	ug	21-DEC-21	22-DEC-21	R5682784
Nickel (Ni)	<3.0		3.0	ug	21-DEC-21	22-DEC-21	R5682784
Lead (Pb)	<3.0		3.0	ug	21-DEC-21	22-DEC-21	R5682784
Selenium (Se)	<10		10	ug	21-DEC-21	22-DEC-21	R5682784
Vanadium (V)	<5.0		5.0	ug	21-DEC-21	22-DEC-21	R5682784
Zinc (Zn)	12.2		5.0	ug	21-DEC-21	22-DEC-21	R5682784

* Refer to Referenced Information for Qualifiers (if any) and Methodology.

ALS ENVIRONMENTAL ANALYTICAL REPORT

Sample Details/Parameters	Result	Qualifier*	D.L.	Units	Extracted	Analyzed	Batch
L2670874-7 NORTH-TSP-391							
Sampled By: Client on 31-OCT-21							
Matrix: Hi Vol Filter							
Miscellaneous Parameters							
Total particulate	7200		2300	ug		20-DEC-21	R5682100
Metals on High Volume Filter by ICPMS							
Arsenic (As)	<3.0		3.0	ug	21-DEC-21	22-DEC-21	R5682784
Cadmium (Cd)	<2.0		2.0	ug	21-DEC-21	22-DEC-21	R5682784
Cobalt (Co)	<2.0		2.0	ug	21-DEC-21	22-DEC-21	R5682784
Chromium (Cr)	<5.0		5.0	ug	21-DEC-21	22-DEC-21	R5682784
Copper (Cu)	44.7		4.0	ug	21-DEC-21	22-DEC-21	R5682784
Iron (Fe)	205		20	ug	21-DEC-21	22-DEC-21	R5682784
Manganese (Mn)	6.3		1.0	ug	21-DEC-21	22-DEC-21	R5682784
Nickel (Ni)	<3.0		3.0	ug	21-DEC-21	22-DEC-21	R5682784
Lead (Pb)	<3.0		3.0	ug	21-DEC-21	22-DEC-21	R5682784
Selenium (Se)	<10		10	ug	21-DEC-21	22-DEC-21	R5682784
Vanadium (V)	<5.0		5.0	ug	21-DEC-21	22-DEC-21	R5682784
Zinc (Zn)	10.5		5.0	ug	21-DEC-21	22-DEC-21	R5682784
L2670874-8 NORTH-TSP-392							
Sampled By: Client on 06-NOV-21							
Matrix: Hi Vol Filter							
Miscellaneous Parameters							
Total particulate	74900		2300	ug		20-DEC-21	R5682100
Metals on High Volume Filter by ICPMS							
Arsenic (As)	<3.0		3.0	ug	21-DEC-21	22-DEC-21	R5682784
Cadmium (Cd)	<2.0		2.0	ug	21-DEC-21	22-DEC-21	R5682784
Cobalt (Co)	<2.0		2.0	ug	21-DEC-21	22-DEC-21	R5682784
Chromium (Cr)	<5.0		5.0	ug	21-DEC-21	22-DEC-21	R5682784
Copper (Cu)	70.7		4.0	ug	21-DEC-21	22-DEC-21	R5682784
Iron (Fe)	1450		20	ug	21-DEC-21	22-DEC-21	R5682784
Manganese (Mn)	40.7		1.0	ug	21-DEC-21	22-DEC-21	R5682784
Nickel (Ni)	<3.0		3.0	ug	21-DEC-21	22-DEC-21	R5682784
Lead (Pb)	<3.0		3.0	ug	21-DEC-21	22-DEC-21	R5682784
Selenium (Se)	<10		10	ug	21-DEC-21	22-DEC-21	R5682784
Vanadium (V)	<5.0		5.0	ug	21-DEC-21	22-DEC-21	R5682784
Zinc (Zn)	35.6		5.0	ug	21-DEC-21	22-DEC-21	R5682784
L2670874-9 NORTH-TSP-393							
Sampled By: Client on 12-NOV-21							
Matrix: Hi Vol Filter							
Miscellaneous Parameters							
Total particulate	5600		2300	ug		20-DEC-21	R5682100
Metals on High Volume Filter by ICPMS							
Arsenic (As)	<3.0		3.0	ug	21-DEC-21	22-DEC-21	R5682784
Cadmium (Cd)	<2.0		2.0	ug	21-DEC-21	22-DEC-21	R5682784
Cobalt (Co)	<2.0		2.0	ug	21-DEC-21	22-DEC-21	R5682784
Chromium (Cr)	<5.0		5.0	ug	21-DEC-21	22-DEC-21	R5682784
Copper (Cu)	131		4.0	ug	21-DEC-21	22-DEC-21	R5682784
Iron (Fe)	159		20	ug	21-DEC-21	22-DEC-21	R5682784
Manganese (Mn)	4.0		1.0	ug	21-DEC-21	22-DEC-21	R5682784
Nickel (Ni)	<3.0		3.0	ug	21-DEC-21	22-DEC-21	R5682784
Lead (Pb)	<3.0		3.0	ug	21-DEC-21	22-DEC-21	R5682784
Selenium (Se)	<10		10	ug	21-DEC-21	22-DEC-21	R5682784
Vanadium (V)	<5.0		5.0	ug	21-DEC-21	22-DEC-21	R5682784
Zinc (Zn)	8.1		5.0	ug	21-DEC-21	22-DEC-21	R5682784

* Refer to Referenced Information for Qualifiers (if any) and Methodology.

ALS ENVIRONMENTAL ANALYTICAL REPORT

Sample Details/Parameters	Result	Qualifier*	D.L.	Units	Extracted	Analyzed	Batch
L2670874-10 NORTH-TSP-394							
Sampled By: Client on 18-NOV-21							
Matrix: Hi Vol Filter							
Miscellaneous Parameters							
Total particulate	10300		2300	ug		20-DEC-21	R5682100
Metals on High Volume Filter by ICPMS							
Arsenic (As)	<3.0		3.0	ug	21-DEC-21	22-DEC-21	R5682784
Cadmium (Cd)	<2.0		2.0	ug	21-DEC-21	22-DEC-21	R5682784
Cobalt (Co)	<2.0		2.0	ug	21-DEC-21	22-DEC-21	R5682784
Chromium (Cr)	<5.0		5.0	ug	21-DEC-21	22-DEC-21	R5682784
Copper (Cu)	86.0		4.0	ug	21-DEC-21	22-DEC-21	R5682784
Iron (Fe)	266		20	ug	21-DEC-21	22-DEC-21	R5682784
Manganese (Mn)	8.1		1.0	ug	21-DEC-21	22-DEC-21	R5682784
Nickel (Ni)	<3.0		3.0	ug	21-DEC-21	22-DEC-21	R5682784
Lead (Pb)	<3.0		3.0	ug	21-DEC-21	22-DEC-21	R5682784
Selenium (Se)	<10		10	ug	21-DEC-21	22-DEC-21	R5682784
Vanadium (V)	<5.0		5.0	ug	21-DEC-21	22-DEC-21	R5682784
Zinc (Zn)	19.4		5.0	ug	21-DEC-21	22-DEC-21	R5682784
L2670874-11 NORTH-TSP-395							
Sampled By: Client on 24-NOV-21							
Matrix: Hi Vol Filter							
Miscellaneous Parameters							
Total particulate	17300		2300	ug		20-DEC-21	R5682100
Metals on High Volume Filter by ICPMS							
Arsenic (As)	<3.0		3.0	ug	21-DEC-21	22-DEC-21	R5682784
Cadmium (Cd)	<2.0		2.0	ug	21-DEC-21	22-DEC-21	R5682784
Cobalt (Co)	<2.0		2.0	ug	21-DEC-21	22-DEC-21	R5682784
Chromium (Cr)	<5.0		5.0	ug	21-DEC-21	22-DEC-21	R5682784
Copper (Cu)	93.2		4.0	ug	21-DEC-21	22-DEC-21	R5682784
Iron (Fe)	324		20	ug	21-DEC-21	22-DEC-21	R5682784
Manganese (Mn)	9.8		1.0	ug	21-DEC-21	22-DEC-21	R5682784
Nickel (Ni)	<3.0		3.0	ug	21-DEC-21	22-DEC-21	R5682784
Lead (Pb)	<3.0		3.0	ug	21-DEC-21	22-DEC-21	R5682784
Selenium (Se)	<10		10	ug	21-DEC-21	22-DEC-21	R5682784
Vanadium (V)	<5.0		5.0	ug	21-DEC-21	22-DEC-21	R5682784
Zinc (Zn)	13.9		5.0	ug	21-DEC-21	22-DEC-21	R5682784
L2670874-12 NORTH-TSP-396							
Sampled By: Client on 30-NOV-21							
Matrix: Hi Vol Filter							
Miscellaneous Parameters							
Total particulate	17100		2300	ug		20-DEC-21	R5682100
Metals on High Volume Filter by ICPMS							
Arsenic (As)	<3.0		3.0	ug	21-DEC-21	22-DEC-21	R5682784
Cadmium (Cd)	<2.0		2.0	ug	21-DEC-21	22-DEC-21	R5682784
Cobalt (Co)	<2.0		2.0	ug	21-DEC-21	22-DEC-21	R5682784
Chromium (Cr)	<5.0		5.0	ug	21-DEC-21	22-DEC-21	R5682784
Copper (Cu)	79.7		4.0	ug	21-DEC-21	22-DEC-21	R5682784
Iron (Fe)	416		20	ug	21-DEC-21	22-DEC-21	R5682784
Manganese (Mn)	11.2		1.0	ug	21-DEC-21	22-DEC-21	R5682784
Nickel (Ni)	<3.0		3.0	ug	21-DEC-21	22-DEC-21	R5682784
Lead (Pb)	<3.0		3.0	ug	21-DEC-21	22-DEC-21	R5682784
Selenium (Se)	<10		10	ug	21-DEC-21	22-DEC-21	R5682784
Vanadium (V)	<5.0		5.0	ug	21-DEC-21	22-DEC-21	R5682784
Zinc (Zn)	31.8		5.0	ug	21-DEC-21	22-DEC-21	R5682784

* Refer to Referenced Information for Qualifiers (if any) and Methodology.

ALS ENVIRONMENTAL ANALYTICAL REPORT

Sample Details/Parameters	Result	Qualifier*	D.L.	Units	Extracted	Analyzed	Batch
L2670874-13 NORTHWEST-TSP-391							
Sampled By: Client on 31-OCT-21							
Matrix: Hi Vol Filter							
Miscellaneous Parameters							
Total particulate	31800		2300	ug		20-DEC-21	R5682100
Metals on High Volume Filter by ICPMS							
Arsenic (As)	<3.0		3.0	ug	21-DEC-21	22-DEC-21	R5682784
Cadmium (Cd)	<2.0		2.0	ug	21-DEC-21	22-DEC-21	R5682784
Cobalt (Co)	<2.0		2.0	ug	21-DEC-21	22-DEC-21	R5682784
Chromium (Cr)	<5.0		5.0	ug	21-DEC-21	22-DEC-21	R5682784
Copper (Cu)	90.0		4.0	ug	21-DEC-21	22-DEC-21	R5682784
Iron (Fe)	842		20	ug	21-DEC-21	22-DEC-21	R5682784
Manganese (Mn)	18.6		1.0	ug	21-DEC-21	22-DEC-21	R5682784
Nickel (Ni)	<3.0		3.0	ug	21-DEC-21	22-DEC-21	R5682784
Lead (Pb)	<3.0		3.0	ug	21-DEC-21	22-DEC-21	R5682784
Selenium (Se)	<10		10	ug	21-DEC-21	22-DEC-21	R5682784
Vanadium (V)	<5.0		5.0	ug	21-DEC-21	22-DEC-21	R5682784
Zinc (Zn)	14.3		5.0	ug	21-DEC-21	22-DEC-21	R5682784
L2670874-14 NORTHWEST-TSP-392							
Sampled By: Client on 06-NOV-21							
Matrix: Hi Vol Filter							
Miscellaneous Parameters							
Total particulate	16100		2300	ug		20-DEC-21	R5682100
Metals on High Volume Filter by ICPMS							
Arsenic (As)	<3.0		3.0	ug	21-DEC-21	22-DEC-21	R5682784
Cadmium (Cd)	<2.0		2.0	ug	21-DEC-21	22-DEC-21	R5682784
Cobalt (Co)	<2.0		2.0	ug	21-DEC-21	22-DEC-21	R5682784
Chromium (Cr)	<5.0		5.0	ug	21-DEC-21	22-DEC-21	R5682784
Copper (Cu)	131		4.0	ug	21-DEC-21	22-DEC-21	R5682784
Iron (Fe)	287		20	ug	21-DEC-21	22-DEC-21	R5682784
Manganese (Mn)	11.7		1.0	ug	21-DEC-21	22-DEC-21	R5682784
Nickel (Ni)	<3.0		3.0	ug	21-DEC-21	22-DEC-21	R5682784
Lead (Pb)	<3.0		3.0	ug	21-DEC-21	22-DEC-21	R5682784
Selenium (Se)	<10		10	ug	21-DEC-21	22-DEC-21	R5682784
Vanadium (V)	<5.0		5.0	ug	21-DEC-21	22-DEC-21	R5682784
Zinc (Zn)	11.1		5.0	ug	21-DEC-21	22-DEC-21	R5682784
L2670874-15 NORTHWEST-TSP-393							
Sampled By: Client on 12-NOV-21							
Matrix: Hi Vol Filter							
Miscellaneous Parameters							
Total particulate	6300		2300	ug		20-DEC-21	R5682100
Metals on High Volume Filter by ICPMS							
Arsenic (As)	<3.0		3.0	ug	21-DEC-21	22-DEC-21	R5682784
Cadmium (Cd)	<2.0		2.0	ug	21-DEC-21	22-DEC-21	R5682784
Cobalt (Co)	<2.0		2.0	ug	21-DEC-21	22-DEC-21	R5682784
Chromium (Cr)	<5.0		5.0	ug	21-DEC-21	22-DEC-21	R5682784
Copper (Cu)	50.4		4.0	ug	21-DEC-21	22-DEC-21	R5682784
Iron (Fe)	221		20	ug	21-DEC-21	22-DEC-21	R5682784
Manganese (Mn)	6.3		1.0	ug	21-DEC-21	22-DEC-21	R5682784
Nickel (Ni)	<3.0		3.0	ug	21-DEC-21	22-DEC-21	R5682784
Lead (Pb)	<3.0		3.0	ug	21-DEC-21	22-DEC-21	R5682784
Selenium (Se)	<10		10	ug	21-DEC-21	22-DEC-21	R5682784
Vanadium (V)	<5.0		5.0	ug	21-DEC-21	22-DEC-21	R5682784
Zinc (Zn)	8.8		5.0	ug	21-DEC-21	22-DEC-21	R5682784

* Refer to Referenced Information for Qualifiers (if any) and Methodology.

ALS ENVIRONMENTAL ANALYTICAL REPORT

Sample Details/Parameters	Result	Qualifier*	D.L.	Units	Extracted	Analyzed	Batch
L2670874-16 NORTHWEST-TSP-394							
Sampled By: Client on 18-NOV-21							
Matrix: Hi Vol Filter							
Miscellaneous Parameters							
Total particulate	9300		2300	ug		20-DEC-21	R5682100
Metals on High Volume Filter by ICPMS							
Arsenic (As)	<3.0		3.0	ug	21-DEC-21	22-DEC-21	R5682784
Cadmium (Cd)	<2.0		2.0	ug	21-DEC-21	22-DEC-21	R5682784
Cobalt (Co)	<2.0		2.0	ug	21-DEC-21	22-DEC-21	R5682784
Chromium (Cr)	<5.0		5.0	ug	21-DEC-21	22-DEC-21	R5682784
Copper (Cu)	81.5		4.0	ug	21-DEC-21	22-DEC-21	R5682784
Iron (Fe)	175		20	ug	21-DEC-21	22-DEC-21	R5682784
Manganese (Mn)	4.5		1.0	ug	21-DEC-21	22-DEC-21	R5682784
Nickel (Ni)	<3.0		3.0	ug	21-DEC-21	22-DEC-21	R5682784
Lead (Pb)	<3.0		3.0	ug	21-DEC-21	22-DEC-21	R5682784
Selenium (Se)	<10		10	ug	21-DEC-21	22-DEC-21	R5682784
Vanadium (V)	<5.0		5.0	ug	21-DEC-21	22-DEC-21	R5682784
Zinc (Zn)	10.0		5.0	ug	21-DEC-21	22-DEC-21	R5682784
L2670874-17 NORTHWEST-TSP-395							
Sampled By: Client on 24-NOV-21							
Matrix: Hi Vol Filter							
Miscellaneous Parameters							
Total particulate	12100		2300	ug		20-DEC-21	R5682100
Metals on High Volume Filter by ICPMS							
Arsenic (As)	<3.0		3.0	ug	21-DEC-21	22-DEC-21	R5682784
Cadmium (Cd)	<2.0		2.0	ug	21-DEC-21	22-DEC-21	R5682784
Cobalt (Co)	<2.0		2.0	ug	21-DEC-21	22-DEC-21	R5682784
Chromium (Cr)	<5.0		5.0	ug	21-DEC-21	22-DEC-21	R5682784
Copper (Cu)	111		4.0	ug	21-DEC-21	22-DEC-21	R5682784
Iron (Fe)	345		20	ug	21-DEC-21	22-DEC-21	R5682784
Manganese (Mn)	13.1		1.0	ug	21-DEC-21	22-DEC-21	R5682784
Nickel (Ni)	<3.0		3.0	ug	21-DEC-21	22-DEC-21	R5682784
Lead (Pb)	<3.0		3.0	ug	21-DEC-21	22-DEC-21	R5682784
Selenium (Se)	<10		10	ug	21-DEC-21	22-DEC-21	R5682784
Vanadium (V)	<5.0		5.0	ug	21-DEC-21	22-DEC-21	R5682784
Zinc (Zn)	13.0		5.0	ug	21-DEC-21	22-DEC-21	R5682784
L2670874-18 NORTHWEST-TSP-396							
Sampled By: Client on 30-NOV-21							
Matrix: Hi Vol Filter							
Miscellaneous Parameters							
Total particulate	9400		2300	ug		20-DEC-21	R5682100
Metals on High Volume Filter by ICPMS							
Arsenic (As)	<3.0		3.0	ug	21-DEC-21	22-DEC-21	R5682784
Cadmium (Cd)	<2.0		2.0	ug	21-DEC-21	22-DEC-21	R5682784
Cobalt (Co)	<2.0		2.0	ug	21-DEC-21	22-DEC-21	R5682784
Chromium (Cr)	<5.0		5.0	ug	21-DEC-21	22-DEC-21	R5682784
Copper (Cu)	186		4.0	ug	21-DEC-21	22-DEC-21	R5682784
Iron (Fe)	241		20	ug	21-DEC-21	22-DEC-21	R5682784
Manganese (Mn)	6.8		1.0	ug	21-DEC-21	22-DEC-21	R5682784
Nickel (Ni)	<3.0		3.0	ug	21-DEC-21	22-DEC-21	R5682784
Lead (Pb)	<3.0		3.0	ug	21-DEC-21	22-DEC-21	R5682784
Selenium (Se)	<10		10	ug	21-DEC-21	22-DEC-21	R5682784
Vanadium (V)	<5.0		5.0	ug	21-DEC-21	22-DEC-21	R5682784
Zinc (Zn)	11.6		5.0	ug	21-DEC-21	22-DEC-21	R5682784

* Refer to Referenced Information for Qualifiers (if any) and Methodology.

ALS ENVIRONMENTAL ANALYTICAL REPORT

Sample Details/Parameters	Result	Qualifier*	D.L.	Units	Extracted	Analyzed	Batch
L2670874-19 SOUTH-PM2.5-391							
Sampled By: Client on 31-OCT-21							
Matrix: 47mm Filter							
Miscellaneous Parameters							
Total particulate	34		15	ug		30-DEC-21	R5684183
L2670874-20 SOUTH-PM2.5-392							
Sampled By: Client on 06-NOV-21							
Matrix: 47mm Filter							
Miscellaneous Parameters							
Total particulate	100		15	ug		30-DEC-21	R5684183
L2670874-21 SOUTH-PM2.5-393							
Sampled By: Client on 12-NOV-21							
Matrix: 47mm Filter							
Miscellaneous Parameters							
Total particulate	15		15	ug		30-DEC-21	R5684183
L2670874-22 SOUTH-PM2.5-394							
Sampled By: Client on 18-NOV-21							
Matrix: 47mm Filter							
Miscellaneous Parameters							
Total particulate	15		15	ug		30-DEC-21	R5684183
L2670874-23 SOUTH-PM2.5-395							
Sampled By: Client on 24-NOV-21							
Matrix: 47mm Filter							
Miscellaneous Parameters							
Total particulate	126		15	ug		30-DEC-21	R5684183
L2670874-24 SOUTH-PM2.5-396							
Sampled By: Client on 30-NOV-21							
Matrix: 47mm Filter							
Miscellaneous Parameters							
Total particulate	72		15	ug		30-DEC-21	R5684183
L2670874-25 NORTH-PM2.5-391							
Sampled By: Client on 31-OCT-21							
Matrix: 47mm Filter							
Miscellaneous Parameters							
Total particulate	31		15	ug		30-DEC-21	R5684183
L2670874-26 NORTH-PM2.5-392							
Sampled By: Client on 06-NOV-21							
Matrix: 47mm Filter							
Miscellaneous Parameters							
Total particulate	132		15	ug		30-DEC-21	R5684183
L2670874-27 NORTH-PM2.5-393							
Sampled By: Client on 12-NOV-21							
Matrix: 47mm Filter							
Miscellaneous Parameters							
Total particulate	<15		15	ug		30-DEC-21	R5684183
L2670874-28 NORTH-PM2.5-394							
Sampled By: Client on 18-NOV-21							
Matrix: 47mm Filter							
Miscellaneous Parameters							
Total particulate	<15		15	ug		30-DEC-21	R5684183

* Refer to Referenced Information for Qualifiers (if any) and Methodology.

ALS ENVIRONMENTAL ANALYTICAL REPORT

Sample Details/Parameters	Result	Qualifier*	D.L.	Units	Extracted	Analyzed	Batch
L2670874-29 NORTH-PM2.5-395							
Sampled By: Client on 24-NOV-21							
Matrix: 47mm Filter							
Miscellaneous Parameters							
Total particulate	51		15	ug		30-DEC-21	R5684183
L2670874-30 NORTH-PM2.5-396							
Sampled By: Client on 30-NOV-21							
Matrix: 47mm Filter							
Miscellaneous Parameters							
Total particulate	103		15	ug		30-DEC-21	R5684183
L2670874-31 NORTHWEST-PM2.5-395							
Sampled By: Client on 24-NOV-21							
Matrix: 47mm Filter							
Miscellaneous Parameters							
Total particulate	101		15	ug		30-DEC-21	R5684183
L2670874-32 NORTHWEST-PM2.5-396							
Sampled By: Client on 30-NOV-21							
Matrix: 47mm Filter							
Miscellaneous Parameters							
Total particulate	201		15	ug		30-DEC-21	R5684183
L2670874-33 NOP1-DUSTFALL-11							
Sampled By: Client on 01-DEC-21							
Matrix: Dustfall							
Dustfalls-Total, Soluble, Insoluble +FV							
Total Dustfall	2.45		0.10	mg/dm2.day		17-JAN-22	R5699196
Total Insoluble Dustfall	1.97		0.10	mg/dm2.day		17-JAN-22	R5699196
Total Soluble Dustfall	0.47		0.10	mg/dm2.day		17-JAN-22	R5699196
Fixed Dustfall	2.16		0.10	mg/dm2.day		17-JAN-22	R5699196
Fixed Insoluble Dustfall	1.96		0.10	mg/dm2.day		17-JAN-22	R5699196
Fixed Soluble Dustfall	0.21		0.10	mg/dm2.day		17-JAN-22	R5699196
Volatile Dustfall	0.29		0.10	mg/dm2.day		17-JAN-22	R5699196
Volatile Insoluble Dustfall	<0.10		0.10	mg/dm2.day		17-JAN-22	R5699196
Volatile Soluble Dustfall	0.27		0.10	mg/dm2.day		17-JAN-22	R5699196
Interval			1	days		12-JAN-22	R5692242
Mercury (Hg)-Total	<0.0000011		0.0000011	mg/dm2.day	12-JAN-22	13-JAN-22	R5694798
Total Metals in Dustfalls by ICPMS							
Aluminum (Al)-Total	0.0346		0.000064	mg/dm2.day	12-JAN-22	13-JAN-22	R5694337
Interval			1	days		14-JAN-22	R5695096
Interval			1	days		12-JAN-22	R5692241
Antimony (Sb)-Total	0.0000048		0.0000021	mg/dm2.day	12-JAN-22	13-JAN-22	R5694337
Arsenic (As)-Total	<0.000041	DLDF	0.000041	mg/dm2.day	12-JAN-22	13-JAN-22	R5694337
Barium (Ba)-Total	0.000127		0.0000011	mg/dm2.day	12-JAN-22	13-JAN-22	R5694337
Beryllium (Be)-Total	<0.000011		0.000011	mg/dm2.day	12-JAN-22	13-JAN-22	R5694337
Bismuth (Bi)-Total	<0.000011		0.000011	mg/dm2.day	12-JAN-22	13-JAN-22	R5694337
Boron (B)-Total	<0.00021		0.00021	mg/dm2.day	12-JAN-22	13-JAN-22	R5694337
Cadmium (Cd)-Total	0.0000041		0.0000011	mg/dm2.day	12-JAN-22	13-JAN-22	R5694337
Calcium (Ca)-Total	0.0679		0.00043	mg/dm2.day	12-JAN-22	13-JAN-22	R5694337
Chromium (Cr)-Total	0.000053		0.000011	mg/dm2.day	12-JAN-22	13-JAN-22	R5694337
Cobalt (Co)-Total	0.0000084		0.0000021	mg/dm2.day	12-JAN-22	13-JAN-22	R5694337
Copper (Cu)-Total	0.000236		0.000011	mg/dm2.day	12-JAN-22	13-JAN-22	R5694337
Lead (Pb)-Total	0.0000637		0.0000011	mg/dm2.day	14-JAN-22	16-JAN-22	R5698680
Iron (Fe)-Total	0.0251		0.00064	mg/dm2.day	12-JAN-22	13-JAN-22	R5694337

* Refer to Referenced Information for Qualifiers (if any) and Methodology.

ALS ENVIRONMENTAL ANALYTICAL REPORT

Sample Details/Parameters	Result	Qualifier*	D.L.	Units	Extracted	Analyzed	Batch
L2670874-33 NOP1-DUSTFALL-11							
Sampled By: Client on 01-DEC-21							
Matrix: Dustfall							
Total Metals in Dustfalls by ICPMS							
Lithium (Li)-Total	<0.00011		0.00011	mg/dm2.day	12-JAN-22	13-JAN-22	R5694337
Magnesium (Mg)-Total	0.0171		0.00011	mg/dm2.day	12-JAN-22	13-JAN-22	R5694337
Manganese (Mn)-Total	0.00145		0.0000021	mg/dm2.day	12-JAN-22	13-JAN-22	R5694337
Molybdenum (Mo)-Total	0.0000042		0.0000011	mg/dm2.day	12-JAN-22	13-JAN-22	R5694337
Nickel (Ni)-Total	0.000069		0.000011	mg/dm2.day	12-JAN-22	13-JAN-22	R5694337
Phosphorus (P)-Total	0.0013		0.0011	mg/dm2.day	12-JAN-22	13-JAN-22	R5694337
Potassium (K)-Total	0.0072		0.0011	mg/dm2.day	12-JAN-22	13-JAN-22	R5694337
Selenium (Se)-Total	<0.000021		0.000021	mg/dm2.day	12-JAN-22	13-JAN-22	R5694337
Silicon (Si)-Total	0.0443		0.0011	mg/dm2.day	12-JAN-22	13-JAN-22	R5694337
Silver (Ag)-Total	0.00000502		0.00000021	mg/dm2.day	14-JAN-22	16-JAN-22	R5698680
Sodium (Na)-Total	0.0046		0.0011	mg/dm2.day	12-JAN-22	13-JAN-22	R5694337
Strontium (Sr)-Total	0.000174		0.0000021	mg/dm2.day	12-JAN-22	13-JAN-22	R5694337
Thallium (Tl)-Total	<0.0000021		0.0000021	mg/dm2.day	12-JAN-22	13-JAN-22	R5694337
Tin (Sn)-Total	<0.0000021		0.0000021	mg/dm2.day	12-JAN-22	13-JAN-22	R5694337
Titanium (Ti)-Total	0.00064		0.00021	mg/dm2.day	12-JAN-22	13-JAN-22	R5694337
Uranium (U)-Total	0.00000052		0.00000021	mg/dm2.day	12-JAN-22	13-JAN-22	R5694337
Vanadium (V)-Total	0.000037		0.000021	mg/dm2.day	12-JAN-22	13-JAN-22	R5694337
Zinc (Zn)-Total	0.000990		0.000064	mg/dm2.day	12-JAN-22	13-JAN-22	R5694337
L2670874-34 CP1-DUSTFALL-11							
Sampled By: Client on 01-DEC-21							
Matrix: Dustfall							
Dustfalls-Total, Soluble, Insoluble +FV							
Total Dustfall	0.65		0.10	mg/dm2.day		17-JAN-22	R5699196
Total Insoluble Dustfall	0.18		0.10	mg/dm2.day		17-JAN-22	R5699196
Total Soluble Dustfall	0.47		0.10	mg/dm2.day		17-JAN-22	R5699196
Fixed Dustfall	0.33		0.10	mg/dm2.day		17-JAN-22	R5699196
Fixed Insoluble Dustfall	0.18		0.10	mg/dm2.day		17-JAN-22	R5699196
Fixed Soluble Dustfall	0.15		0.10	mg/dm2.day		17-JAN-22	R5699196
Volatile Dustfall	0.32		0.10	mg/dm2.day		17-JAN-22	R5699196
Volatile Insoluble Dustfall	<0.10		0.10	mg/dm2.day		17-JAN-22	R5699196
Volatile Soluble Dustfall	0.32		0.10	mg/dm2.day		17-JAN-22	R5699196
Interval			1	days		12-JAN-22	R5692242
Mercury (Hg)-Total	<0.0000012		0.0000012	mg/dm2.day	12-JAN-22	13-JAN-22	R5694798
Total Metals in Dustfalls by ICPMS							
Aluminum (Al)-Total	0.00446		0.000074	mg/dm2.day	12-JAN-22	13-JAN-22	R5694337
Interval			1	days		12-JAN-22	R5692241
Antimony (Sb)-Total	<0.0000025		0.0000025	mg/dm2.day	12-JAN-22	13-JAN-22	R5694337
Arsenic (As)-Total	<0.000012	DLDF	0.000012	mg/dm2.day	12-JAN-22	13-JAN-22	R5694337
Barium (Ba)-Total	0.0000288		0.0000012	mg/dm2.day	12-JAN-22	13-JAN-22	R5694337
Beryllium (Be)-Total	<0.000012		0.000012	mg/dm2.day	12-JAN-22	13-JAN-22	R5694337
Bismuth (Bi)-Total	<0.000012		0.000012	mg/dm2.day	12-JAN-22	13-JAN-22	R5694337
Boron (B)-Total	<0.00025		0.00025	mg/dm2.day	12-JAN-22	13-JAN-22	R5694337
Cadmium (Cd)-Total	<0.0000012		0.0000012	mg/dm2.day	12-JAN-22	13-JAN-22	R5694337
Calcium (Ca)-Total	0.0102		0.00049	mg/dm2.day	12-JAN-22	13-JAN-22	R5694337
Chromium (Cr)-Total	<0.000012		0.000012	mg/dm2.day	12-JAN-22	13-JAN-22	R5694337
Cobalt (Co)-Total	<0.0000025		0.0000025	mg/dm2.day	12-JAN-22	13-JAN-22	R5694337
Copper (Cu)-Total	0.000045		0.000012	mg/dm2.day	12-JAN-22	13-JAN-22	R5694337
Lead (Pb)-Total	0.0000080		0.0000012	mg/dm2.day	12-JAN-22	13-JAN-22	R5694337
Iron (Fe)-Total	0.00355		0.00074	mg/dm2.day	12-JAN-22	13-JAN-22	R5694337

* Refer to Referenced Information for Qualifiers (if any) and Methodology.

ALS ENVIRONMENTAL ANALYTICAL REPORT

Sample Details/Parameters	Result	Qualifier*	D.L.	Units	Extracted	Analyzed	Batch
L2670874-34 CP1-DUSTFALL-11							
Sampled By: Client on 01-DEC-21							
Matrix: Dustfall							
Total Metals in Dustfalls by ICPMS							
Lithium (Li)-Total	<0.00012		0.00012	mg/dm2.day	12-JAN-22	13-JAN-22	R5694337
Magnesium (Mg)-Total	0.00289		0.00012	mg/dm2.day	12-JAN-22	13-JAN-22	R5694337
Manganese (Mn)-Total	0.000217		0.0000025	mg/dm2.day	12-JAN-22	13-JAN-22	R5694337
Molybdenum (Mo)-Total	<0.0000012		0.0000012	mg/dm2.day	12-JAN-22	13-JAN-22	R5694337
Nickel (Ni)-Total	<0.000012		0.000012	mg/dm2.day	12-JAN-22	13-JAN-22	R5694337
Phosphorus (P)-Total	<0.0012		0.0012	mg/dm2.day	12-JAN-22	13-JAN-22	R5694337
Potassium (K)-Total	0.0013		0.0012	mg/dm2.day	12-JAN-22	13-JAN-22	R5694337
Selenium (Se)-Total	<0.000025		0.000025	mg/dm2.day	12-JAN-22	13-JAN-22	R5694337
Silicon (Si)-Total	0.0060		0.0012	mg/dm2.day	12-JAN-22	13-JAN-22	R5694337
Silver (Ag)-Total	0.00000028		0.00000025	mg/dm2.day	12-JAN-22	13-JAN-22	R5694337
Sodium (Na)-Total	0.0016		0.0012	mg/dm2.day	12-JAN-22	13-JAN-22	R5694337
Strontium (Sr)-Total	0.0000249		0.0000025	mg/dm2.day	12-JAN-22	13-JAN-22	R5694337
Thallium (Tl)-Total	<0.0000025		0.0000025	mg/dm2.day	12-JAN-22	13-JAN-22	R5694337
Tin (Sn)-Total	<0.0000025		0.0000025	mg/dm2.day	12-JAN-22	13-JAN-22	R5694337
Titanium (Ti)-Total	<0.00025		0.00025	mg/dm2.day	12-JAN-22	13-JAN-22	R5694337
Uranium (U)-Total	<0.00000025		0.00000025	mg/dm2.day	12-JAN-22	13-JAN-22	R5694337
Vanadium (V)-Total	<0.000025		0.000025	mg/dm2.day	12-JAN-22	13-JAN-22	R5694337
Zinc (Zn)-Total	0.000126		0.000074	mg/dm2.day	12-JAN-22	13-JAN-22	R5694337
L2670874-35 WCP1-DUSTFALL-11							
Sampled By: Client on 01-DEC-21							
Matrix: Dustfall							
Dustfalls-Total, Soluble, Insoluble +FV							
Total Dustfall	0.60		0.10	mg/dm2.day		17-JAN-22	R5699196
Total Insoluble Dustfall	0.33		0.10	mg/dm2.day		17-JAN-22	R5699196
Total Soluble Dustfall	0.27		0.10	mg/dm2.day		17-JAN-22	R5699196
Fixed Dustfall	0.42		0.10	mg/dm2.day		17-JAN-22	R5699196
Fixed Insoluble Dustfall	0.33		0.10	mg/dm2.day		17-JAN-22	R5699196
Fixed Soluble Dustfall	<0.10		0.10	mg/dm2.day		17-JAN-22	R5699196
Volatile Dustfall	0.18		0.10	mg/dm2.day		17-JAN-22	R5699196
Volatile Insoluble Dustfall	<0.10		0.10	mg/dm2.day		17-JAN-22	R5699196
Volatile Soluble Dustfall	0.18		0.10	mg/dm2.day		17-JAN-22	R5699196
Interval			1	days		12-JAN-22	R5692242
Mercury (Hg)-Total	<0.0000013		0.0000013	mg/dm2.day	12-JAN-22	13-JAN-22	R5694798
Total Metals in Dustfalls by ICPMS							
Aluminum (Al)-Total	0.00810		0.000075	mg/dm2.day	12-JAN-22	13-JAN-22	R5694337
Interval			1	days		12-JAN-22	R5692241
Antimony (Sb)-Total	<0.0000025		0.0000025	mg/dm2.day	12-JAN-22	13-JAN-22	R5694337
Arsenic (As)-Total	<0.000015	DLDF	0.000015	mg/dm2.day	12-JAN-22	13-JAN-22	R5694337
Barium (Ba)-Total	0.0000390		0.0000013	mg/dm2.day	12-JAN-22	13-JAN-22	R5694337
Beryllium (Be)-Total	<0.000013		0.000013	mg/dm2.day	12-JAN-22	13-JAN-22	R5694337
Bismuth (Bi)-Total	<0.000013		0.000013	mg/dm2.day	12-JAN-22	13-JAN-22	R5694337
Boron (B)-Total	<0.00025		0.00025	mg/dm2.day	12-JAN-22	13-JAN-22	R5694337
Cadmium (Cd)-Total	<0.0000013		0.0000013	mg/dm2.day	12-JAN-22	13-JAN-22	R5694337
Calcium (Ca)-Total	0.0156		0.00050	mg/dm2.day	12-JAN-22	13-JAN-22	R5694337
Chromium (Cr)-Total	<0.000013		0.000013	mg/dm2.day	12-JAN-22	13-JAN-22	R5694337
Cobalt (Co)-Total	<0.0000025		0.0000025	mg/dm2.day	12-JAN-22	13-JAN-22	R5694337
Copper (Cu)-Total	0.000073		0.000013	mg/dm2.day	12-JAN-22	13-JAN-22	R5694337
Lead (Pb)-Total	0.0000185		0.0000013	mg/dm2.day	12-JAN-22	13-JAN-22	R5694337
Iron (Fe)-Total	0.00695		0.00075	mg/dm2.day	12-JAN-22	13-JAN-22	R5694337

* Refer to Referenced Information for Qualifiers (if any) and Methodology.

ALS ENVIRONMENTAL ANALYTICAL REPORT

Sample Details/Parameters	Result	Qualifier*	D.L.	Units	Extracted	Analyzed	Batch
L2670874-35 WCP1-DUSTFALL-11							
Sampled By: Client on 01-DEC-21							
Matrix: Dustfall							
Total Metals in Dustfalls by ICPMS							
Lithium (Li)-Total	<0.00013		0.00013	mg/dm2.day	12-JAN-22	13-JAN-22	R5694337
Magnesium (Mg)-Total	0.00462		0.00013	mg/dm2.day	12-JAN-22	13-JAN-22	R5694337
Manganese (Mn)-Total	0.000339		0.0000025	mg/dm2.day	12-JAN-22	13-JAN-22	R5694337
Molybdenum (Mo)-Total	<0.0000013		0.0000013	mg/dm2.day	12-JAN-22	13-JAN-22	R5694337
Nickel (Ni)-Total	0.000023		0.000013	mg/dm2.day	12-JAN-22	13-JAN-22	R5694337
Phosphorus (P)-Total	<0.0013		0.0013	mg/dm2.day	12-JAN-22	13-JAN-22	R5694337
Potassium (K)-Total	0.0021		0.0013	mg/dm2.day	12-JAN-22	13-JAN-22	R5694337
Selenium (Se)-Total	<0.000025		0.000025	mg/dm2.day	12-JAN-22	13-JAN-22	R5694337
Silicon (Si)-Total	0.0109		0.0013	mg/dm2.day	12-JAN-22	13-JAN-22	R5694337
Silver (Ag)-Total	0.00000121		0.00000025	mg/dm2.day	12-JAN-22	13-JAN-22	R5694337
Sodium (Na)-Total	0.0021		0.0013	mg/dm2.day	12-JAN-22	13-JAN-22	R5694337
Strontium (Sr)-Total	0.0000497		0.0000025	mg/dm2.day	12-JAN-22	13-JAN-22	R5694337
Thallium (Tl)-Total	<0.0000025		0.0000025	mg/dm2.day	12-JAN-22	13-JAN-22	R5694337
Tin (Sn)-Total	<0.0000025		0.0000025	mg/dm2.day	12-JAN-22	13-JAN-22	R5694337
Titanium (Ti)-Total	<0.00025		0.00025	mg/dm2.day	12-JAN-22	13-JAN-22	R5694337
Uranium (U)-Total	<0.00000025		0.00000025	mg/dm2.day	12-JAN-22	13-JAN-22	R5694337
Vanadium (V)-Total	<0.000025		0.000025	mg/dm2.day	12-JAN-22	13-JAN-22	R5694337
Zinc (Zn)-Total	0.000219		0.000075	mg/dm2.day	12-JAN-22	13-JAN-22	R5694337
L2670874-36 GH1-DUSTFALL-11							
Sampled By: Client on 01-DEC-21							
Matrix: Dustfall							
Dustfalls-Total, Soluble, Insoluble +FV							
Total Dustfall	0.44		0.10	mg/dm2.day		17-JAN-22	R5699196
Total Insoluble Dustfall	0.14		0.10	mg/dm2.day		17-JAN-22	R5699196
Total Soluble Dustfall	0.30		0.10	mg/dm2.day		17-JAN-22	R5699196
Fixed Dustfall	0.29		0.10	mg/dm2.day		17-JAN-22	R5699196
Fixed Insoluble Dustfall	0.17		0.10	mg/dm2.day		17-JAN-22	R5699196
Fixed Soluble Dustfall	0.11		0.10	mg/dm2.day		17-JAN-22	R5699196
Volatile Dustfall	0.16		0.10	mg/dm2.day		17-JAN-22	R5699196
Volatile Insoluble Dustfall	<0.10		0.10	mg/dm2.day		17-JAN-22	R5699196
Volatile Soluble Dustfall	0.19		0.10	mg/dm2.day		17-JAN-22	R5699196
Interval			1	days		12-JAN-22	R5692242
Mercury (Hg)-Total	<0.00000098		0.00000098	mg/dm2.day	12-JAN-22	13-JAN-22	R5694798
Total Metals in Dustfalls by ICPMS							
Aluminum (Al)-Total	0.00869		0.000059	mg/dm2.day	12-JAN-22	13-JAN-22	R5694337
Interval			1	days		12-JAN-22	R5692241
Antimony (Sb)-Total	<0.0000020		0.0000020	mg/dm2.day	12-JAN-22	13-JAN-22	R5694337
Arsenic (As)-Total	<0.000014	DLDF	0.000014	mg/dm2.day	12-JAN-22	13-JAN-22	R5694337
Barium (Ba)-Total	0.0000404		0.00000098	mg/dm2.day	12-JAN-22	13-JAN-22	R5694337
Beryllium (Be)-Total	<0.0000098		0.0000098	mg/dm2.day	12-JAN-22	13-JAN-22	R5694337
Bismuth (Bi)-Total	<0.0000098		0.0000098	mg/dm2.day	12-JAN-22	13-JAN-22	R5694337
Boron (B)-Total	<0.00020		0.00020	mg/dm2.day	12-JAN-22	13-JAN-22	R5694337
Cadmium (Cd)-Total	<0.00000098		0.00000098	mg/dm2.day	12-JAN-22	13-JAN-22	R5694337
Calcium (Ca)-Total	0.0168		0.00039	mg/dm2.day	12-JAN-22	13-JAN-22	R5694337
Chromium (Cr)-Total	0.0000145		0.0000098	mg/dm2.day	12-JAN-22	13-JAN-22	R5694337
Cobalt (Co)-Total	0.0000029		0.0000020	mg/dm2.day	12-JAN-22	13-JAN-22	R5694337

* Refer to Referenced Information for Qualifiers (if any) and Methodology.

ALS ENVIRONMENTAL ANALYTICAL REPORT

Sample Details/Parameters	Result	Qualifier*	D.L.	Units	Extracted	Analyzed	Batch
L2670874-36 GH1-DUSTFALL-11							
Sampled By: Client on 01-DEC-21							
Matrix: Dustfall							
Total Metals in Dustfalls by ICPMS							
Copper (Cu)-Total	0.0000411		0.0000098	mg/dm2.day	12-JAN-22	13-JAN-22	R5694337
Lead (Pb)-Total	0.0000178		0.00000098	mg/dm2.day	12-JAN-22	13-JAN-22	R5694337
Iron (Fe)-Total	0.00817		0.00059	mg/dm2.day	12-JAN-22	13-JAN-22	R5694337
Lithium (Li)-Total	<0.000098		0.000098	mg/dm2.day	12-JAN-22	13-JAN-22	R5694337
Magnesium (Mg)-Total	0.00508		0.000098	mg/dm2.day	12-JAN-22	13-JAN-22	R5694337
Manganese (Mn)-Total	0.000326		0.0000020	mg/dm2.day	12-JAN-22	13-JAN-22	R5694337
Molybdenum (Mo)-Total	0.00000108		0.00000098	mg/dm2.day	12-JAN-22	13-JAN-22	R5694337
Nickel (Ni)-Total	0.0000188		0.0000098	mg/dm2.day	12-JAN-22	13-JAN-22	R5694337
Phosphorus (P)-Total	<0.00098		0.00098	mg/dm2.day	12-JAN-22	13-JAN-22	R5694337
Potassium (K)-Total	0.00221		0.00098	mg/dm2.day	12-JAN-22	13-JAN-22	R5694337
Selenium (Se)-Total	<0.000020		0.000020	mg/dm2.day	12-JAN-22	13-JAN-22	R5694337
Silicon (Si)-Total	0.0121		0.00098	mg/dm2.day	12-JAN-22	13-JAN-22	R5694337
Silver (Ag)-Total	0.00000042		0.00000020	mg/dm2.day	12-JAN-22	13-JAN-22	R5694337
Sodium (Na)-Total	0.00224		0.00098	mg/dm2.day	12-JAN-22	13-JAN-22	R5694337
Strontium (Sr)-Total	0.0000503		0.0000020	mg/dm2.day	12-JAN-22	13-JAN-22	R5694337
Thallium (Tl)-Total	<0.0000020		0.0000020	mg/dm2.day	12-JAN-22	13-JAN-22	R5694337
Tin (Sn)-Total	<0.0000020		0.0000020	mg/dm2.day	12-JAN-22	13-JAN-22	R5694337
Titanium (Ti)-Total	<0.00020		0.00020	mg/dm2.day	12-JAN-22	13-JAN-22	R5694337
Uranium (U)-Total	<0.00000020		0.00000020	mg/dm2.day	12-JAN-22	13-JAN-22	R5694337
Vanadium (V)-Total	<0.000020		0.000020	mg/dm2.day	12-JAN-22	13-JAN-22	R5694337
Zinc (Zn)-Total	0.000163		0.000059	mg/dm2.day	12-JAN-22	13-JAN-22	R5694337
L2670874-37 SPP1-DUSTFALL-46							
Sampled By: Client on 10-NOV-21							
Matrix: Dustfall							
Dustfalls-Total, Soluble, Insoluble +FV							
Total Dustfall	2.78		0.43	mg/dm2.day		17-JAN-22	R5699196
Total Insoluble Dustfall	1.65		0.43	mg/dm2.day		17-JAN-22	R5699196
Total Soluble Dustfall	1.13		0.43	mg/dm2.day		17-JAN-22	R5699196
Fixed Dustfall	2.14		0.43	mg/dm2.day		17-JAN-22	R5699196
Fixed Insoluble Dustfall	1.35		0.43	mg/dm2.day		17-JAN-22	R5699196
Fixed Soluble Dustfall	0.79		0.43	mg/dm2.day		17-JAN-22	R5699196
Volatile Dustfall	0.64		0.43	mg/dm2.day		17-JAN-22	R5699196
Volatile Insoluble Dustfall	<0.43		0.43	mg/dm2.day		17-JAN-22	R5699196
Volatile Soluble Dustfall	<0.43		0.43	mg/dm2.day		17-JAN-22	R5699196
Interval			1	days		12-JAN-22	R5692242
Mercury (Hg)-Total	<0.0000059		0.0000059	mg/dm2.day	12-JAN-22	13-JAN-22	R5694798
Total Metals in Dustfalls by ICPMS							
Aluminum (Al)-Total	0.0721		0.00036	mg/dm2.day	12-JAN-22	13-JAN-22	R5694337
Interval			1	days		12-JAN-22	R5692241
Antimony (Sb)-Total	<0.000012		0.000012	mg/dm2.day	12-JAN-22	13-JAN-22	R5694337
Arsenic (As)-Total	<0.000095	DLDF	0.000095	mg/dm2.day	12-JAN-22	13-JAN-22	R5694337
Barium (Ba)-Total	0.000380		0.0000059	mg/dm2.day	12-JAN-22	13-JAN-22	R5694337
Beryllium (Be)-Total	<0.000059		0.000059	mg/dm2.day	12-JAN-22	13-JAN-22	R5694337
Bismuth (Bi)-Total	<0.000059		0.000059	mg/dm2.day	12-JAN-22	13-JAN-22	R5694337
Boron (B)-Total	<0.0012		0.0012	mg/dm2.day	12-JAN-22	13-JAN-22	R5694337
Cadmium (Cd)-Total	<0.0000059		0.0000059	mg/dm2.day	12-JAN-22	13-JAN-22	R5694337
Calcium (Ca)-Total	0.174		0.0024	mg/dm2.day	12-JAN-22	13-JAN-22	R5694337

* Refer to Referenced Information for Qualifiers (if any) and Methodology.

ALS ENVIRONMENTAL ANALYTICAL REPORT

Sample Details/Parameters	Result	Qualifier*	D.L.	Units	Extracted	Analyzed	Batch
L2670874-37 SPP1-DUSTFALL-46							
Sampled By: Client on 10-NOV-21							
Matrix: Dustfall							
Total Metals in Dustfalls by ICPMS							
Chromium (Cr)-Total	<0.000059		0.000059	mg/dm2.day	12-JAN-22	13-JAN-22	R5694337
Cobalt (Co)-Total	<0.000012		0.000012	mg/dm2.day	12-JAN-22	13-JAN-22	R5694337
Copper (Cu)-Total	0.000777		0.000059	mg/dm2.day	12-JAN-22	13-JAN-22	R5694337
Lead (Pb)-Total	0.000141		0.0000059	mg/dm2.day	12-JAN-22	13-JAN-22	R5694337
Iron (Fe)-Total	0.0620		0.0036	mg/dm2.day	12-JAN-22	13-JAN-22	R5694337
Lithium (Li)-Total	<0.00059		0.00059	mg/dm2.day	12-JAN-22	13-JAN-22	R5694337
Magnesium (Mg)-Total	0.0549		0.00059	mg/dm2.day	12-JAN-22	13-JAN-22	R5694337
Manganese (Mn)-Total	0.00290		0.000012	mg/dm2.day	12-JAN-22	13-JAN-22	R5694337
Molybdenum (Mo)-Total	0.0000072		0.0000059	mg/dm2.day	12-JAN-22	13-JAN-22	R5694337
Nickel (Ni)-Total	<0.000059		0.000059	mg/dm2.day	12-JAN-22	13-JAN-22	R5694337
Phosphorus (P)-Total	0.0155		0.0059	mg/dm2.day	12-JAN-22	13-JAN-22	R5694337
Potassium (K)-Total	0.171		0.0059	mg/dm2.day	12-JAN-22	13-JAN-22	R5694337
Selenium (Se)-Total	<0.00012		0.00012	mg/dm2.day	12-JAN-22	13-JAN-22	R5694337
Silicon (Si)-Total	0.116		0.0059	mg/dm2.day	12-JAN-22	13-JAN-22	R5694337
Silver (Ag)-Total	0.0000064		0.0000012	mg/dm2.day	12-JAN-22	13-JAN-22	R5694337
Sodium (Na)-Total	0.0103		0.0059	mg/dm2.day	12-JAN-22	13-JAN-22	R5694337
Strontium (Sr)-Total	0.000372		0.000012	mg/dm2.day	12-JAN-22	13-JAN-22	R5694337
Thallium (Tl)-Total	<0.000012		0.000012	mg/dm2.day	12-JAN-22	13-JAN-22	R5694337
Tin (Sn)-Total	<0.000012		0.000012	mg/dm2.day	12-JAN-22	13-JAN-22	R5694337
Titanium (Ti)-Total	<0.0012		0.0012	mg/dm2.day	12-JAN-22	13-JAN-22	R5694337
Uranium (U)-Total	<0.0000012		0.0000012	mg/dm2.day	12-JAN-22	13-JAN-22	R5694337
Vanadium (V)-Total	0.00013		0.00012	mg/dm2.day	12-JAN-22	13-JAN-22	R5694337
Zinc (Zn)-Total	0.00127		0.00036	mg/dm2.day	12-JAN-22	13-JAN-22	R5694337
L2670874-38 SPP1-DUSTFALL-47							
Sampled By: Client on 17-NOV-21							
Matrix: Dustfall							
Dustfalls-Total, Soluble, Insoluble +FV							
Total Dustfall	0.60		0.43	mg/dm2.day		17-JAN-22	R5699196
Total Insoluble Dustfall	<0.43		0.43	mg/dm2.day		17-JAN-22	R5699196
Total Soluble Dustfall	0.69		0.43	mg/dm2.day		17-JAN-22	R5699196
Fixed Dustfall	<0.43		0.43	mg/dm2.day		17-JAN-22	R5699196
Fixed Insoluble Dustfall	<0.43		0.43	mg/dm2.day		17-JAN-22	R5699196
Fixed Soluble Dustfall	<0.43		0.43	mg/dm2.day		17-JAN-22	R5699196
Volatile Dustfall	<0.43		0.43	mg/dm2.day		17-JAN-22	R5699196
Volatile Insoluble Dustfall	<0.43		0.43	mg/dm2.day		17-JAN-22	R5699196
Volatile Soluble Dustfall	0.48		0.43	mg/dm2.day		17-JAN-22	R5699196
Interval			1	days		12-JAN-22	R5692242
Mercury (Hg)-Total	<0.0000066		0.0000066	mg/dm2.day	12-JAN-22	13-JAN-22	R5694798
Total Metals in Dustfalls by ICPMS							
Aluminum (Al)-Total	0.00050	RRV	0.00039	mg/dm2.day	14-JAN-22	16-JAN-22	R5698680
Interval			1	days		12-JAN-22	R5692241
Interval			1	days		14-JAN-22	R5695096
Antimony (Sb)-Total	<0.000013		0.000013	mg/dm2.day	12-JAN-22	13-JAN-22	R5694337
Arsenic (As)-Total	<0.000066	DLDF	0.000066	mg/dm2.day	12-JAN-22	13-JAN-22	R5694337
Barium (Ba)-Total	0.0000091	RRV	0.0000066	mg/dm2.day	14-JAN-22	16-JAN-22	R5698680
Beryllium (Be)-Total	<0.000066		0.000066	mg/dm2.day	12-JAN-22	13-JAN-22	R5694337
Bismuth (Bi)-Total	<0.000066		0.000066	mg/dm2.day	12-JAN-22	13-JAN-22	R5694337
Boron (B)-Total	<0.0013		0.0013	mg/dm2.day	12-JAN-22	13-JAN-22	R5694337
Cadmium (Cd)-Total	<0.0000066		0.0000066	mg/dm2.day	12-JAN-22	13-JAN-22	R5694337
Calcium (Ca)-Total	0.0037	RRV	0.0026	mg/dm2.day	14-JAN-22	16-JAN-22	R5698680

* Refer to Referenced Information for Qualifiers (if any) and Methodology.

ALS ENVIRONMENTAL ANALYTICAL REPORT

Sample Details/Parameters	Result	Qualifier*	D.L.	Units	Extracted	Analyzed	Batch
L2670874-38 SPP1-DUSTFALL-47							
Sampled By: Client on 17-NOV-21							
Matrix: Dustfall							
Total Metals in Dustfalls by ICPMS							
Chromium (Cr)-Total	<0.000066		0.000066	mg/dm2.day	12-JAN-22	13-JAN-22	R5694337
Cobalt (Co)-Total	<0.000013		0.000013	mg/dm2.day	12-JAN-22	13-JAN-22	R5694337
Copper (Cu)-Total	<0.000066		0.000066	mg/dm2.day	12-JAN-22	13-JAN-22	R5694337
Lead (Pb)-Total	<0.0000066		0.0000066	mg/dm2.day	12-JAN-22	13-JAN-22	R5694337
Iron (Fe)-Total	<0.0039		0.0039	mg/dm2.day	12-JAN-22	13-JAN-22	R5694337
Lithium (Li)-Total	<0.00066		0.00066	mg/dm2.day	12-JAN-22	13-JAN-22	R5694337
Magnesium (Mg)-Total	<0.00066		0.00066	mg/dm2.day	12-JAN-22	13-JAN-22	R5694337
Manganese (Mn)-Total	0.000019	RRV	0.000013	mg/dm2.day	14-JAN-22	16-JAN-22	R5698680
Molybdenum (Mo)-Total	<0.0000066		0.0000066	mg/dm2.day	12-JAN-22	13-JAN-22	R5694337
Nickel (Ni)-Total	<0.000066		0.000066	mg/dm2.day	12-JAN-22	13-JAN-22	R5694337
Phosphorus (P)-Total	<0.0066		0.0066	mg/dm2.day	12-JAN-22	13-JAN-22	R5694337
Potassium (K)-Total	<0.0066		0.0066	mg/dm2.day	12-JAN-22	13-JAN-22	R5694337
Selenium (Se)-Total	<0.00013		0.00013	mg/dm2.day	12-JAN-22	13-JAN-22	R5694337
Silicon (Si)-Total	<0.0066		0.0066	mg/dm2.day	12-JAN-22	13-JAN-22	R5694337
Silver (Ag)-Total	<0.0000013		0.0000013	mg/dm2.day	12-JAN-22	13-JAN-22	R5694337
Sodium (Na)-Total	<0.0066		0.0066	mg/dm2.day	12-JAN-22	13-JAN-22	R5694337
Strontium (Sr)-Total	<0.000013		0.000013	mg/dm2.day	14-JAN-22	16-JAN-22	R5698680
Thallium (Tl)-Total	<0.000013		0.000013	mg/dm2.day	12-JAN-22	13-JAN-22	R5694337
Tin (Sn)-Total	<0.000013		0.000013	mg/dm2.day	12-JAN-22	13-JAN-22	R5694337
Titanium (Ti)-Total	<0.0013		0.0013	mg/dm2.day	12-JAN-22	13-JAN-22	R5694337
Uranium (U)-Total	<0.0000013		0.0000013	mg/dm2.day	12-JAN-22	13-JAN-22	R5694337
Vanadium (V)-Total	<0.00013		0.00013	mg/dm2.day	12-JAN-22	13-JAN-22	R5694337
Zinc (Zn)-Total	<0.00039		0.00039	mg/dm2.day	12-JAN-22	13-JAN-22	R5694337
L2670874-39 SPP1-DUSTFALL-48							
Sampled By: Client on 24-NOV-21							
Matrix: Dustfall							
Dustfalls-Total, Soluble, Insoluble +FV							
Total Dustfall	1.70		0.43	mg/dm2.day		17-JAN-22	R5699196
Total Insoluble Dustfall	0.46		0.43	mg/dm2.day		17-JAN-22	R5699196
Total Soluble Dustfall	1.25		0.43	mg/dm2.day		17-JAN-22	R5699196
Fixed Dustfall	0.74		0.43	mg/dm2.day		17-JAN-22	R5699196
Fixed Insoluble Dustfall	0.49		0.43	mg/dm2.day		17-JAN-22	R5699196
Fixed Soluble Dustfall	<0.43		0.43	mg/dm2.day		17-JAN-22	R5699196
Volatile Dustfall	0.96		0.43	mg/dm2.day		17-JAN-22	R5699196
Volatile Insoluble Dustfall	<0.43		0.43	mg/dm2.day		17-JAN-22	R5699196
Volatile Soluble Dustfall	0.99		0.43	mg/dm2.day		17-JAN-22	R5699196
Interval			1	days		12-JAN-22	R5692242
Mercury (Hg)-Total	<0.0000059		0.0000059	mg/dm2.day	12-JAN-22	13-JAN-22	R5694798
Total Metals in Dustfalls by ICPMS							
Aluminum (Al)-Total	0.0154		0.00036	mg/dm2.day	12-JAN-22	13-JAN-22	R5694337
Interval			1	days		12-JAN-22	R5692241
Antimony (Sb)-Total	<0.000012		0.000012	mg/dm2.day	12-JAN-22	13-JAN-22	R5694337
Arsenic (As)-Total	<0.000083	DLDF	0.000083	mg/dm2.day	12-JAN-22	13-JAN-22	R5694337
Barium (Ba)-Total	0.0000889		0.0000059	mg/dm2.day	12-JAN-22	13-JAN-22	R5694337
Beryllium (Be)-Total	<0.000059		0.000059	mg/dm2.day	12-JAN-22	13-JAN-22	R5694337
Bismuth (Bi)-Total	<0.000059		0.000059	mg/dm2.day	12-JAN-22	13-JAN-22	R5694337
Boron (B)-Total	<0.0012		0.0012	mg/dm2.day	12-JAN-22	13-JAN-22	R5694337
Cadmium (Cd)-Total	<0.0000059		0.0000059	mg/dm2.day	12-JAN-22	13-JAN-22	R5694337
Calcium (Ca)-Total	0.0400		0.0024	mg/dm2.day	12-JAN-22	13-JAN-22	R5694337
Chromium (Cr)-Total	<0.000059		0.000059	mg/dm2.day	12-JAN-22	13-JAN-22	R5694337

* Refer to Referenced Information for Qualifiers (if any) and Methodology.

ALS ENVIRONMENTAL ANALYTICAL REPORT

Sample Details/Parameters	Result	Qualifier*	D.L.	Units	Extracted	Analyzed	Batch
L2670874-39 SPP1-DUSTFALL-48							
Sampled By: Client on 24-NOV-21							
Matrix: Dustfall							
Total Metals in Dustfalls by ICPMS							
Cobalt (Co)-Total	<0.000012		0.000012	mg/dm2.day	12-JAN-22	13-JAN-22	R5694337
Copper (Cu)-Total	0.000297		0.000059	mg/dm2.day	12-JAN-22	13-JAN-22	R5694337
Lead (Pb)-Total	0.0000865		0.0000059	mg/dm2.day	12-JAN-22	13-JAN-22	R5694337
Iron (Fe)-Total	0.0131		0.0036	mg/dm2.day	12-JAN-22	13-JAN-22	R5694337
Lithium (Li)-Total	<0.00059		0.00059	mg/dm2.day	12-JAN-22	13-JAN-22	R5694337
Magnesium (Mg)-Total	0.0101		0.00059	mg/dm2.day	12-JAN-22	13-JAN-22	R5694337
Manganese (Mn)-Total	0.00128		0.000012	mg/dm2.day	12-JAN-22	13-JAN-22	R5694337
Molybdenum (Mo)-Total	<0.0000059		0.0000059	mg/dm2.day	12-JAN-22	13-JAN-22	R5694337
Nickel (Ni)-Total	0.000305		0.000059	mg/dm2.day	12-JAN-22	13-JAN-22	R5694337
Phosphorus (P)-Total	<0.0059		0.0059	mg/dm2.day	12-JAN-22	13-JAN-22	R5694337
Potassium (K)-Total	<0.0059		0.0059	mg/dm2.day	12-JAN-22	13-JAN-22	R5694337
Selenium (Se)-Total	<0.00012		0.00012	mg/dm2.day	12-JAN-22	13-JAN-22	R5694337
Silicon (Si)-Total	0.0176		0.0059	mg/dm2.day	12-JAN-22	13-JAN-22	R5694337
Silver (Ag)-Total	0.0000168		0.0000012	mg/dm2.day	12-JAN-22	13-JAN-22	R5694337
Sodium (Na)-Total	<0.0059		0.0059	mg/dm2.day	12-JAN-22	13-JAN-22	R5694337
Strontium (Sr)-Total	0.000086		0.000012	mg/dm2.day	12-JAN-22	13-JAN-22	R5694337
Thallium (Tl)-Total	<0.000012		0.000012	mg/dm2.day	12-JAN-22	13-JAN-22	R5694337
Tin (Sn)-Total	<0.000012		0.000012	mg/dm2.day	12-JAN-22	13-JAN-22	R5694337
Titanium (Ti)-Total	<0.0012		0.0012	mg/dm2.day	12-JAN-22	13-JAN-22	R5694337
Uranium (U)-Total	<0.0000012		0.0000012	mg/dm2.day	12-JAN-22	13-JAN-22	R5694337
Vanadium (V)-Total	<0.00012		0.00012	mg/dm2.day	12-JAN-22	13-JAN-22	R5694337
Zinc (Zn)-Total	0.00082		0.00036	mg/dm2.day	12-JAN-22	13-JAN-22	R5694337
L2670874-40 SPP1-DUSTFALL-49							
Sampled By: Client on 01-DEC-21							
Matrix: Dustfall							
Dustfalls-Total, Soluble, Insoluble +FV							
Total Dustfall	1.57		0.43	mg/dm2.day		17-JAN-22	R5699196
Total Insoluble Dustfall	0.47		0.43	mg/dm2.day		17-JAN-22	R5699196
Total Soluble Dustfall	1.10		0.43	mg/dm2.day		17-JAN-22	R5699196
Fixed Dustfall	0.82		0.43	mg/dm2.day		17-JAN-22	R5699196
Fixed Insoluble Dustfall	0.54		0.43	mg/dm2.day		17-JAN-22	R5699196
Fixed Soluble Dustfall	<0.43		0.43	mg/dm2.day		17-JAN-22	R5699196
Volatile Dustfall	0.75		0.43	mg/dm2.day		17-JAN-22	R5699196
Volatile Insoluble Dustfall	<0.43		0.43	mg/dm2.day		17-JAN-22	R5699196
Volatile Soluble Dustfall	0.82		0.43	mg/dm2.day		17-JAN-22	R5699196
Interval			1	days		12-JAN-22	R5692242
Mercury (Hg)-Total	<0.0000061		0.0000061	mg/dm2.day	12-JAN-22	13-JAN-22	R5694798
Total Metals in Dustfalls by ICPMS							
Aluminum (Al)-Total	0.0207		0.00036	mg/dm2.day	12-JAN-22	13-JAN-22	R5694337
Interval			1	days		12-JAN-22	R5692241
Antimony (Sb)-Total	<0.000012		0.000012	mg/dm2.day	12-JAN-22	13-JAN-22	R5694337
Arsenic (As)-Total	<0.000061	DLDF	0.000061	mg/dm2.day	12-JAN-22	13-JAN-22	R5694337
Barium (Ba)-Total	0.0000965		0.0000061	mg/dm2.day	12-JAN-22	13-JAN-22	R5694337
Beryllium (Be)-Total	<0.000061		0.000061	mg/dm2.day	12-JAN-22	13-JAN-22	R5694337
Bismuth (Bi)-Total	<0.000061		0.000061	mg/dm2.day	12-JAN-22	13-JAN-22	R5694337
Boron (B)-Total	<0.0012		0.0012	mg/dm2.day	12-JAN-22	13-JAN-22	R5694337
Cadmium (Cd)-Total	<0.0000061		0.0000061	mg/dm2.day	12-JAN-22	13-JAN-22	R5694337
Calcium (Ca)-Total	0.0352		0.0024	mg/dm2.day	12-JAN-22	13-JAN-22	R5694337
Chromium (Cr)-Total	<0.000061		0.000061	mg/dm2.day	12-JAN-22	13-JAN-22	R5694337
Cobalt (Co)-Total	<0.000012		0.000012	mg/dm2.day	12-JAN-22	13-JAN-22	R5694337

* Refer to Referenced Information for Qualifiers (if any) and Methodology.

ALS ENVIRONMENTAL ANALYTICAL REPORT

Sample Details/Parameters	Result	Qualifier*	D.L.	Units	Extracted	Analyzed	Batch
L2670874-40 SPP1-DUSTFALL-49							
Sampled By: Client on 01-DEC-21							
Matrix: Dustfall							
Total Metals in Dustfalls by ICPMS							
Copper (Cu)-Total	0.000121		0.000061	mg/dm2.day	12-JAN-22	13-JAN-22	R5694337
Lead (Pb)-Total	0.0000260		0.0000061	mg/dm2.day	12-JAN-22	13-JAN-22	R5694337
Iron (Fe)-Total	0.0179		0.0036	mg/dm2.day	12-JAN-22	13-JAN-22	R5694337
Lithium (Li)-Total	<0.00061		0.00061	mg/dm2.day	12-JAN-22	13-JAN-22	R5694337
Magnesium (Mg)-Total	0.0112		0.00061	mg/dm2.day	12-JAN-22	13-JAN-22	R5694337
Manganese (Mn)-Total	0.000722		0.000012	mg/dm2.day	12-JAN-22	13-JAN-22	R5694337
Molybdenum (Mo)-Total	<0.0000061		0.0000061	mg/dm2.day	12-JAN-22	13-JAN-22	R5694337
Nickel (Ni)-Total	<0.000061		0.000061	mg/dm2.day	12-JAN-22	13-JAN-22	R5694337
Phosphorus (P)-Total	<0.0061		0.0061	mg/dm2.day	12-JAN-22	13-JAN-22	R5694337
Potassium (K)-Total	<0.0061		0.0061	mg/dm2.day	12-JAN-22	13-JAN-22	R5694337
Selenium (Se)-Total	<0.00012		0.00012	mg/dm2.day	12-JAN-22	13-JAN-22	R5694337
Silicon (Si)-Total	0.0246		0.0061	mg/dm2.day	12-JAN-22	13-JAN-22	R5694337
Silver (Ag)-Total	0.0000073		0.0000012	mg/dm2.day	12-JAN-22	13-JAN-22	R5694337
Sodium (Na)-Total	<0.0061		0.0061	mg/dm2.day	12-JAN-22	13-JAN-22	R5694337
Strontium (Sr)-Total	0.000109		0.000012	mg/dm2.day	12-JAN-22	13-JAN-22	R5694337
Thallium (Tl)-Total	<0.000012		0.000012	mg/dm2.day	12-JAN-22	13-JAN-22	R5694337
Tin (Sn)-Total	<0.000012		0.000012	mg/dm2.day	12-JAN-22	13-JAN-22	R5694337
Titanium (Ti)-Total	<0.0012		0.0012	mg/dm2.day	12-JAN-22	13-JAN-22	R5694337
Uranium (U)-Total	<0.0000012		0.0000012	mg/dm2.day	12-JAN-22	13-JAN-22	R5694337
Vanadium (V)-Total	<0.00012		0.00012	mg/dm2.day	12-JAN-22	13-JAN-22	R5694337
Zinc (Zn)-Total	<0.00036		0.00036	mg/dm2.day	12-JAN-22	13-JAN-22	R5694337
L2670874-41 DUSTFALL-GALLINGER ROAD							
Sampled By: Client on 01-DEC-21							
Matrix: Dustfall							
Dustfalls-Total, Soluble, Insoluble +FV							
Total Dustfall	0.33		0.10	mg/dm2.day		17-JAN-22	R5699196
Total Insoluble Dustfall	0.24		0.10	mg/dm2.day		17-JAN-22	R5699196
Total Soluble Dustfall	<0.10		0.10	mg/dm2.day		17-JAN-22	R5699196
Fixed Dustfall	0.25		0.10	mg/dm2.day		17-JAN-22	R5699196
Fixed Insoluble Dustfall	0.19		0.10	mg/dm2.day		17-JAN-22	R5699196
Fixed Soluble Dustfall	<0.10		0.10	mg/dm2.day		17-JAN-22	R5699196
Volatile Dustfall	<0.10		0.10	mg/dm2.day		17-JAN-22	R5699196
Volatile Insoluble Dustfall	<0.10		0.10	mg/dm2.day		17-JAN-22	R5699196
Volatile Soluble Dustfall	<0.10		0.10	mg/dm2.day		17-JAN-22	R5699196
Interval			1	days		12-JAN-22	R5692242
Mercury (Hg)-Total	<0.0000018		0.0000018	mg/dm2.day	12-JAN-22	13-JAN-22	R5694798
Total Metals in Dustfalls by ICPMS							
Aluminum (Al)-Total	0.00637		0.00011	mg/dm2.day	12-JAN-22	13-JAN-22	R5694337
Interval			1	days		12-JAN-22	R5692241
Antimony (Sb)-Total	<0.0000036		0.0000036	mg/dm2.day	12-JAN-22	13-JAN-22	R5694337
Arsenic (As)-Total	<0.000021	DLDF	0.000021	mg/dm2.day	12-JAN-22	13-JAN-22	R5694337
Barium (Ba)-Total	0.0000358		0.0000018	mg/dm2.day	12-JAN-22	13-JAN-22	R5694337
Beryllium (Be)-Total	<0.000018		0.000018	mg/dm2.day	12-JAN-22	13-JAN-22	R5694337
Bismuth (Bi)-Total	<0.000018		0.000018	mg/dm2.day	12-JAN-22	13-JAN-22	R5694337
Boron (B)-Total	<0.00036		0.00036	mg/dm2.day	12-JAN-22	13-JAN-22	R5694337
Cadmium (Cd)-Total	<0.0000018		0.0000018	mg/dm2.day	12-JAN-22	13-JAN-22	R5694337
Calcium (Ca)-Total	0.0111		0.00071	mg/dm2.day	12-JAN-22	13-JAN-22	R5694337
Chromium (Cr)-Total	<0.000018		0.000018	mg/dm2.day	12-JAN-22	13-JAN-22	R5694337
Cobalt (Co)-Total	<0.0000036		0.0000036	mg/dm2.day	12-JAN-22	13-JAN-22	R5694337
Copper (Cu)-Total	0.000043		0.000018	mg/dm2.day	12-JAN-22	13-JAN-22	R5694337

* Refer to Referenced Information for Qualifiers (if any) and Methodology.

ALS ENVIRONMENTAL ANALYTICAL REPORT

Sample Details/Parameters	Result	Qualifier*	D.L.	Units	Extracted	Analyzed	Batch
L2670874-41 DUSTFALL-GALLINGER ROAD							
Sampled By: Client on 01-DEC-21							
Matrix: Dustfall							
Total Metals in Dustfalls by ICPMS							
Lead (Pb)-Total	0.0000083		0.0000018	mg/dm2.day	12-JAN-22	13-JAN-22	R5694337
Iron (Fe)-Total	0.0053		0.0011	mg/dm2.day	12-JAN-22	13-JAN-22	R5694337
Lithium (Li)-Total	<0.00018		0.00018	mg/dm2.day	12-JAN-22	13-JAN-22	R5694337
Magnesium (Mg)-Total	0.00363		0.00018	mg/dm2.day	12-JAN-22	13-JAN-22	R5694337
Manganese (Mn)-Total	0.000229		0.0000036	mg/dm2.day	12-JAN-22	13-JAN-22	R5694337
Molybdenum (Mo)-Total	<0.0000018		0.0000018	mg/dm2.day	12-JAN-22	13-JAN-22	R5694337
Nickel (Ni)-Total	0.000026		0.000018	mg/dm2.day	12-JAN-22	13-JAN-22	R5694337
Phosphorus (P)-Total	<0.0018		0.0018	mg/dm2.day	12-JAN-22	13-JAN-22	R5694337
Potassium (K)-Total	<0.0018		0.0018	mg/dm2.day	12-JAN-22	13-JAN-22	R5694337
Selenium (Se)-Total	<0.000036		0.000036	mg/dm2.day	12-JAN-22	13-JAN-22	R5694337
Silicon (Si)-Total	0.0079		0.0018	mg/dm2.day	12-JAN-22	13-JAN-22	R5694337
Silver (Ag)-Total	0.00000304		0.00000036	mg/dm2.day	12-JAN-22	13-JAN-22	R5694337
Sodium (Na)-Total	<0.0018		0.0018	mg/dm2.day	12-JAN-22	13-JAN-22	R5694337
Strontium (Sr)-Total	0.0000295		0.0000036	mg/dm2.day	12-JAN-22	13-JAN-22	R5694337
Thallium (Tl)-Total	<0.0000036		0.0000036	mg/dm2.day	12-JAN-22	13-JAN-22	R5694337
Tin (Sn)-Total	<0.0000036		0.0000036	mg/dm2.day	12-JAN-22	13-JAN-22	R5694337
Titanium (Ti)-Total	<0.00036		0.00036	mg/dm2.day	12-JAN-22	13-JAN-22	R5694337
Uranium (U)-Total	<0.00000036		0.00000036	mg/dm2.day	12-JAN-22	13-JAN-22	R5694337
Vanadium (V)-Total	<0.000036		0.000036	mg/dm2.day	12-JAN-22	13-JAN-22	R5694337
Zinc (Zn)-Total	0.00016		0.00011	mg/dm2.day	12-JAN-22	13-JAN-22	R5694337
L2670874-42 DUSTFALL-TAIT ROAD (SOUTH)							
Sampled By: Client on 01-DEC-21							
Matrix: Dustfall							
Dustfalls-Total, Soluble, Insoluble +FV							
Total Dustfall	0.36		0.10	mg/dm2.day		17-JAN-22	R5699196
Total Insoluble Dustfall	0.14		0.10	mg/dm2.day		17-JAN-22	R5699196
Total Soluble Dustfall	0.23		0.10	mg/dm2.day		17-JAN-22	R5699196
Fixed Dustfall	0.18		0.10	mg/dm2.day		17-JAN-22	R5699196
Fixed Insoluble Dustfall	0.12		0.10	mg/dm2.day		17-JAN-22	R5699196
Fixed Soluble Dustfall	<0.10		0.10	mg/dm2.day		17-JAN-22	R5699196
Volatile Dustfall	0.18		0.10	mg/dm2.day		17-JAN-22	R5699196
Volatile Insoluble Dustfall	<0.10		0.10	mg/dm2.day		17-JAN-22	R5699196
Volatile Soluble Dustfall	0.17		0.10	mg/dm2.day		17-JAN-22	R5699196
Interval			1	days		12-JAN-22	R5692242
Mercury (Hg)-Total	<0.0000014		0.0000014	mg/dm2.day	12-JAN-22	13-JAN-22	R5694798
Total Metals in Dustfalls by ICPMS							
Aluminum (Al)-Total	0.00293		0.000084	mg/dm2.day	12-JAN-22	13-JAN-22	R5694337
Interval			1	days		12-JAN-22	R5692241
Antimony (Sb)-Total	<0.0000028		0.0000028	mg/dm2.day	12-JAN-22	13-JAN-22	R5694337
Arsenic (As)-Total	<0.000017	DLDF	0.000017	mg/dm2.day	12-JAN-22	13-JAN-22	R5694337
Barium (Ba)-Total	0.0000265		0.0000014	mg/dm2.day	12-JAN-22	13-JAN-22	R5694337
Beryllium (Be)-Total	<0.000014		0.000014	mg/dm2.day	12-JAN-22	13-JAN-22	R5694337
Bismuth (Bi)-Total	<0.000014		0.000014	mg/dm2.day	12-JAN-22	13-JAN-22	R5694337
Boron (B)-Total	<0.00028		0.00028	mg/dm2.day	12-JAN-22	13-JAN-22	R5694337
Cadmium (Cd)-Total	<0.0000014		0.0000014	mg/dm2.day	12-JAN-22	13-JAN-22	R5694337
Calcium (Ca)-Total	0.00891		0.00056	mg/dm2.day	12-JAN-22	13-JAN-22	R5694337
Chromium (Cr)-Total	<0.000014		0.000014	mg/dm2.day	12-JAN-22	13-JAN-22	R5694337
Cobalt (Co)-Total	<0.0000028		0.0000028	mg/dm2.day	12-JAN-22	13-JAN-22	R5694337
Copper (Cu)-Total	0.000045		0.000014	mg/dm2.day	12-JAN-22	13-JAN-22	R5694337

* Refer to Referenced Information for Qualifiers (if any) and Methodology.

ALS ENVIRONMENTAL ANALYTICAL REPORT

Sample Details/Parameters	Result	Qualifier*	D.L.	Units	Extracted	Analyzed	Batch
L2670874-42 DUSTFALL-TAIT ROAD (SOUTH)							
Sampled By: Client on 01-DEC-21							
Matrix: Dustfall							
Total Metals in Dustfalls by ICPMS							
Lead (Pb)-Total	0.0000119		0.0000014	mg/dm2.day	12-JAN-22	13-JAN-22	R5694337
Iron (Fe)-Total	0.00284		0.00084	mg/dm2.day	12-JAN-22	13-JAN-22	R5694337
Lithium (Li)-Total	<0.00014		0.00014	mg/dm2.day	12-JAN-22	13-JAN-22	R5694337
Magnesium (Mg)-Total	0.00245		0.00014	mg/dm2.day	12-JAN-22	13-JAN-22	R5694337
Manganese (Mn)-Total	0.000198		0.0000028	mg/dm2.day	12-JAN-22	13-JAN-22	R5694337
Molybdenum (Mo)-Total	<0.0000014		0.0000014	mg/dm2.day	12-JAN-22	13-JAN-22	R5694337
Nickel (Ni)-Total	0.000043		0.000014	mg/dm2.day	12-JAN-22	13-JAN-22	R5694337
Phosphorus (P)-Total	<0.0014		0.0014	mg/dm2.day	12-JAN-22	13-JAN-22	R5694337
Potassium (K)-Total	<0.0014		0.0014	mg/dm2.day	12-JAN-22	13-JAN-22	R5694337
Selenium (Se)-Total	<0.000028		0.000028	mg/dm2.day	12-JAN-22	13-JAN-22	R5694337
Silicon (Si)-Total	0.0040		0.0014	mg/dm2.day	12-JAN-22	13-JAN-22	R5694337
Silver (Ag)-Total	0.00000036		0.00000028	mg/dm2.day	12-JAN-22	13-JAN-22	R5694337
Sodium (Na)-Total	0.0014		0.0014	mg/dm2.day	12-JAN-22	13-JAN-22	R5694337
Strontium (Sr)-Total	0.0000193		0.0000028	mg/dm2.day	12-JAN-22	13-JAN-22	R5694337
Thallium (Tl)-Total	<0.0000028		0.0000028	mg/dm2.day	12-JAN-22	13-JAN-22	R5694337
Tin (Sn)-Total	<0.0000028		0.0000028	mg/dm2.day	12-JAN-22	13-JAN-22	R5694337
Titanium (Ti)-Total	<0.00028		0.00028	mg/dm2.day	12-JAN-22	13-JAN-22	R5694337
Uranium (U)-Total	<0.00000028		0.00000028	mg/dm2.day	12-JAN-22	13-JAN-22	R5694337
Vanadium (V)-Total	<0.000028		0.000028	mg/dm2.day	12-JAN-22	13-JAN-22	R5694337
Zinc (Zn)-Total	0.000135		0.000084	mg/dm2.day	12-JAN-22	13-JAN-22	R5694337
L2670874-43 DUSTFALL-NORTHWEST							
Sampled By: Client on 01-DEC-21							
Matrix: Dustfall							
Dustfalls-Total, Soluble, Insoluble +FV							
Total Dustfall	0.25		0.10	mg/dm2.day		17-JAN-22	R5699196
Total Insoluble Dustfall	<0.10		0.10	mg/dm2.day		17-JAN-22	R5699196
Total Soluble Dustfall	0.16		0.10	mg/dm2.day		17-JAN-22	R5699196
Fixed Dustfall	0.12		0.10	mg/dm2.day		17-JAN-22	R5699196
Fixed Insoluble Dustfall	<0.10		0.10	mg/dm2.day		17-JAN-22	R5699196
Fixed Soluble Dustfall	<0.10		0.10	mg/dm2.day		17-JAN-22	R5699196
Volatile Dustfall	0.13		0.10	mg/dm2.day		17-JAN-22	R5699196
Volatile Insoluble Dustfall	<0.10		0.10	mg/dm2.day		17-JAN-22	R5699196
Volatile Soluble Dustfall	0.10		0.10	mg/dm2.day		17-JAN-22	R5699196
Interval			1	days		12-JAN-22	R5692242
Mercury (Hg)-Total	<0.0000016		0.0000016	mg/dm2.day	12-JAN-22	13-JAN-22	R5694798
Total Metals in Dustfalls by ICPMS							
Aluminum (Al)-Total	0.00267		0.000094	mg/dm2.day	12-JAN-22	13-JAN-22	R5694337
Interval			1	days		12-JAN-22	R5692241
Antimony (Sb)-Total	<0.0000031		0.0000031	mg/dm2.day	12-JAN-22	13-JAN-22	R5694337
Arsenic (As)-Total	<0.000016	DLDF	0.000016	mg/dm2.day	12-JAN-22	13-JAN-22	R5694337
Barium (Ba)-Total	0.0000284		0.0000016	mg/dm2.day	12-JAN-22	13-JAN-22	R5694337
Beryllium (Be)-Total	<0.000016		0.000016	mg/dm2.day	12-JAN-22	13-JAN-22	R5694337
Bismuth (Bi)-Total	<0.000016		0.000016	mg/dm2.day	12-JAN-22	13-JAN-22	R5694337
Boron (B)-Total	<0.00031		0.00031	mg/dm2.day	12-JAN-22	13-JAN-22	R5694337
Cadmium (Cd)-Total	<0.0000016		0.0000016	mg/dm2.day	12-JAN-22	13-JAN-22	R5694337
Calcium (Ca)-Total	0.00654		0.00062	mg/dm2.day	12-JAN-22	13-JAN-22	R5694337
Chromium (Cr)-Total	<0.000016		0.000016	mg/dm2.day	12-JAN-22	13-JAN-22	R5694337
Cobalt (Co)-Total	<0.0000031		0.0000031	mg/dm2.day	12-JAN-22	13-JAN-22	R5694337
Copper (Cu)-Total	0.000021		0.000016	mg/dm2.day	12-JAN-22	13-JAN-22	R5694337

* Refer to Referenced Information for Qualifiers (if any) and Methodology.

ALS ENVIRONMENTAL ANALYTICAL REPORT

Sample Details/Parameters	Result	Qualifier*	D.L.	Units	Extracted	Analyzed	Batch
L2670874-43 DUSTFALL-NORTHWEST							
Sampled By: Client on 01-DEC-21							
Matrix: Dustfall							
Total Metals in Dustfalls by ICPMS							
Lead (Pb)-Total	0.0000028		0.0000016	mg/dm2.day	12-JAN-22	13-JAN-22	R5694337
Iron (Fe)-Total	0.00268		0.00094	mg/dm2.day	12-JAN-22	13-JAN-22	R5694337
Lithium (Li)-Total	<0.00016		0.00016	mg/dm2.day	12-JAN-22	13-JAN-22	R5694337
Magnesium (Mg)-Total	0.00185		0.00016	mg/dm2.day	12-JAN-22	13-JAN-22	R5694337
Manganese (Mn)-Total	0.000116		0.0000031	mg/dm2.day	12-JAN-22	13-JAN-22	R5694337
Molybdenum (Mo)-Total	<0.0000016		0.0000016	mg/dm2.day	12-JAN-22	13-JAN-22	R5694337
Nickel (Ni)-Total	<0.000016		0.000016	mg/dm2.day	12-JAN-22	13-JAN-22	R5694337
Phosphorus (P)-Total	<0.0016		0.0016	mg/dm2.day	12-JAN-22	13-JAN-22	R5694337
Potassium (K)-Total	<0.0016		0.0016	mg/dm2.day	12-JAN-22	13-JAN-22	R5694337
Selenium (Se)-Total	<0.000031		0.000031	mg/dm2.day	12-JAN-22	13-JAN-22	R5694337
Silicon (Si)-Total	0.0035		0.0016	mg/dm2.day	12-JAN-22	13-JAN-22	R5694337
Silver (Ag)-Total	0.00000056		0.00000031	mg/dm2.day	12-JAN-22	13-JAN-22	R5694337
Sodium (Na)-Total	<0.0016		0.0016	mg/dm2.day	12-JAN-22	13-JAN-22	R5694337
Strontium (Sr)-Total	0.0000158		0.0000031	mg/dm2.day	12-JAN-22	13-JAN-22	R5694337
Thallium (Tl)-Total	<0.0000031		0.0000031	mg/dm2.day	12-JAN-22	13-JAN-22	R5694337
Tin (Sn)-Total	<0.0000031		0.0000031	mg/dm2.day	12-JAN-22	13-JAN-22	R5694337
Titanium (Ti)-Total	<0.00031		0.00031	mg/dm2.day	12-JAN-22	13-JAN-22	R5694337
Uranium (U)-Total	<0.00000031		0.00000031	mg/dm2.day	12-JAN-22	13-JAN-22	R5694337
Vanadium (V)-Total	<0.000031		0.000031	mg/dm2.day	12-JAN-22	13-JAN-22	R5694337
Zinc (Zn)-Total	<0.000094		0.000094	mg/dm2.day	12-JAN-22	13-JAN-22	R5694337

* Refer to Referenced Information for Qualifiers (if any) and Methodology.

Reference Information

Sample Parameter Qualifier Key:

Qualifier	Description
DLDF	Detection Limit Raised: Dustfall sample isopropanol preservative caused matrix interference on Arsenic and Selenium.
MB-LOR	Method Blank exceeds ALS DQO. Limits of Reporting have been adjusted for samples with positive hits below 5x blank level.
MS-B	Matrix Spike recovery could not be accurately calculated due to high analyte background in sample.
RRV	Reported Result Verified By Repeat Analysis

Test Method References:

ALS Test Code	Matrix	Test Description	Method Reference**
AIR VOLUME-HIVOL-BU	Filter	Air volume (m3)	USEPA IO3.1
AIR VOLUME-M212 F-BU	Filter	Air volume (m3)	EPA QA Guidance Document 2.12
DUSTFALLS-ALL-DM2-VA	Dustfall	Dustfalls-Total, Soluble, Insoluble +FV	BC LAB MANUAL - PARTICULATE

This analysis is carried out using procedures modified from British Columbia Environmental Manual "Particulate."
Particulates or "Dustfalls" are determined gravimetrically. Total Insoluble and Soluble Dustfalls are determined by filtering a sample through a 0.45 um membrane filter and drying the filter and filtrate at 104 C, followed by ignition at 550 C. The remaining residue after 550 C represents the fixed portion and the weight lost on ignition represents the volatile portion. The sum of all fixed and volatile portions on both Insoluble and Soluble portions represents Total Dustfalls.

HG-DUST(DM2-CVAFS-VA	Dustfall	Total Mercury in Dustfalls by CVAFS	EPA 245.7

This analysis is carried out using procedures adapted from "Standard Methods for the Examination of Water and Wastewater" published by the American Public Health Association, and with procedures adapted from "Test Methods for Evaluating Solid Waste" SW-846 published by the United States Environmental Protection Agency (EPA). Instrumental analysis is by cold vapour atomic fluorescence spectrophotometry or atomic absorption spectrophotometry (EPA Method 245.7).

MET-DUST(DM2)-MS-VA	Dustfall	Total Metals in Dustfalls by ICPMS	EPA 6020A

This analysis is carried out using procedures adapted from "Standard Methods for the Examination of Water and Wastewater" published by the American Public Health Association, and with procedures adapted from "Test Methods for Evaluating Solid Waste" SW-846 published by the United States Environmental Protection Agency (EPA). Instrumental analysis is by inductively coupled plasma - mass spectrometry (EPA Method 6020A).

MET-IO3.5-MS-BU	Filter	Metals on High Volume Filter by ICPMS	IO3.5

After weighing (if required), hivol filters are sub-sampled and leached with nitric acid to extract available metal analytes. After dilution, the extracts are submitted to the ICPMS instrument for analysis.

PART-HIVOL-GRAV-BU	Filter	Particulate on High Volume Filter	USEPA IO3.1
PART-M212 F-GRAV-BU	Filter	PM via Gravimetric Analysis	EPA QA Guidance Document 2.12

The particulate matter collected onto tare-weighed 47mm Teflon Disc filter media is desiccated then brought to a constant weight on an analytical balance. Results are presented in ug (per filter). An air volume can be included to allow for reporting in ug/m3.

** ALS test methods may incorporate modifications from specified reference methods to improve performance.

The last two letters of the above test code(s) indicate the laboratory that performed analytical analysis for that test. Refer to the list below:

Laboratory Definition Code	Laboratory Location
BU	ALS ENVIRONMENTAL - BURLINGTON, ONTARIO, CANADA
VA	ALS ENVIRONMENTAL - VANCOUVER, BRITISH COLUMBIA, CANADA

Chain of Custody Numbers:

Reference Information

Test Method References:

ALS Test Code	Matrix	Test Description	Method Reference**

GLOSSARY OF REPORT TERMS

Surrogates are compounds that are similar in behaviour to target analyte(s), but that do not normally occur in environmental samples. For applicable tests, surrogates are added to samples prior to analysis as a check on recovery. In reports that display the D.L. column, laboratory objectives for surrogates are listed there.
mg/kg - milligrams per kilogram based on dry weight of sample
mg/kg wwt - milligrams per kilogram based on wet weight of sample
mg/kg lwt - milligrams per kilogram based on lipid-adjusted weight
mg/L - unit of concentration based on volume, parts per million.
< - Less than.
D.L. - The reporting limit.
N/A - Result not available. Refer to qualifier code and definition for explanation.

Test results reported relate only to the samples as received by the laboratory.
UNLESS OTHERWISE STATED, ALL SAMPLES WERE RECEIVED IN ACCEPTABLE CONDITION.
Analytical results in unsigned test reports with the DRAFT watermark are subject to change, pending final QC review.

Quality Control Report

Workorder: L2670874 Report Date: 21-JAN-22

Client: New Gold Inc. Rainy River Project
5967 Highway 11/71 P.O. Box 5
Emo ON P0W 1E0

Contact: Sarah Flesher

Test	Matrix	Reference	Result	Qualifier	Units	RPD	Limit	Analyzed
MET-IO3.5-MS-BU	**Filter**							
Batch R5682784								
WG3678621-3 DUP		**L2670874-1**						
Arsenic (As)		<3.0	<3.0	RPD-NA	ug	N/A	20	22-DEC-21
Cadmium (Cd)		<2.0	<2.0	RPD-NA	ug	N/A	20	22-DEC-21
Cobalt (Co)		<2.0	<2.0	RPD-NA	ug	N/A	20	22-DEC-21
Chromium (Cr)		<5.0	<5.0	RPD-NA	ug	N/A	20	22-DEC-21
Copper (Cu)		49.1	45.5		ug	7.6	20	22-DEC-21
Iron (Fe)		110	101		ug	9.0	25	22-DEC-21
Manganese (Mn)		2.8	2.3		ug	18	20	22-DEC-21
Nickel (Ni)		<3.0	<3.0	RPD-NA	ug	N/A	20	22-DEC-21
Lead (Pb)		<3.0	<3.0	RPD-NA	ug	N/A	20	22-DEC-21
Selenium (Se)		<10	<10	RPD-NA	ug	N/A	20	22-DEC-21
Vanadium (V)		<5.0	<5.0	RPD-NA	ug	N/A	20	22-DEC-21
Zinc (Zn)		6.8	6.4		ug	6.1	20	22-DEC-21
WG3678621-2 LCS								
Arsenic (As)			101.0		%		80-120	22-DEC-21
Cadmium (Cd)			103.6		%		80-120	22-DEC-21
Cobalt (Co)			105.0		%		80-120	22-DEC-21
Chromium (Cr)			107.0		%		80-120	22-DEC-21
Copper (Cu)			106.0		%		80-120	22-DEC-21
Iron (Fe)			100.6		%		80-120	22-DEC-21
Manganese (Mn)			101.0		%		80-120	22-DEC-21
Nickel (Ni)			104.0		%		80-120	22-DEC-21
Lead (Pb)			103.0		%		80-120	22-DEC-21
Selenium (Se)			104.0		%		80-120	22-DEC-21
Vanadium (V)			108.0		%		80-120	22-DEC-21
Zinc (Zn)			102.0		%		80-120	22-DEC-21
WG3678621-1 MB								
Arsenic (As)			<3.0		ug		3	22-DEC-21
Cadmium (Cd)			<0.027		ug		0.027	22-DEC-21
Cobalt (Co)			<0.030		ug		0.03	22-DEC-21
Chromium (Cr)			<3.4		ug		3.4	22-DEC-21
Copper (Cu)			<1.0		ug		1	22-DEC-21
Iron (Fe)			<12		ug		12	22-DEC-21
Manganese (Mn)			<0.45		ug		0.45	22-DEC-21
Nickel (Ni)			<0.25		ug		0.25	22-DEC-21
Lead (Pb)			<0.12		ug		0.12	22-DEC-21

Quality Control Report

Test	Matrix	Reference	Result	Qualifier	Units	RPD	Limit	Analyzed
MET-IO3.5-MS-BU	**Filter**							
Batch R5682784								
WG3678621-1 MB								
Selenium (Se)			<1.3		ug		1.25	22-DEC-21
Vanadium (V)			<5.0		ug		10	22-DEC-21
Zinc (Zn)			<4.5		ug		4.5	22-DEC-21
WG3678621-4 MS		**L2670874-1**						
Arsenic (As)			98.1		%		75-125	22-DEC-21
Cadmium (Cd)			105.3		%		75-125	22-DEC-21
Cobalt (Co)			100.8		%		75-125	22-DEC-21
Chromium (Cr)			107.2		%		75-125	22-DEC-21
Copper (Cu)			N/A	MS-B	%		-	22-DEC-21
Iron (Fe)			102.6		%		75-125	22-DEC-21
Manganese (Mn)			98.8		%		75-125	22-DEC-21
Nickel (Ni)			101.3		%		75-125	22-DEC-21
Lead (Pb)			96.3		%		75-125	22-DEC-21
Selenium (Se)			107.7		%		75-125	22-DEC-21
Vanadium (V)			103.5		%		75-125	22-DEC-21
Zinc (Zn)			99.4		%		75-125	22-DEC-21
PART-HIVOL-GRAV-BU	**Filter**							
Batch R5682100								
WG3678547-4 DUP		**L2670874-1**						
Total particulate		2400	3000	J	ug	600	4600	20-DEC-21
WG3678547-3 MB								
Total particulate			<100		ug		100	20-DEC-21
PART-M212 F-GRAV-BU	**Filter**							
Batch R5684183								
WG3680804-3 DUP		**L2670874-19**						
Total particulate		34	32		ug	6.1	10	30-DEC-21
WG3680804-1 MB								
Total particulate			<15		ug		15	30-DEC-21
WG3680804-2 MB								
Total particulate			<15		ug		15	30-DEC-21
DUSTFALLS-ALL-DM2-VA	**Dustfall**							
Batch R5699196								
WG3684784-1 MB								
Total Dustfall			<0.10		mg/dm2.day		0.1	17-JAN-22
Total Insoluble Dustfall			<0.10		mg/dm2.day		0.1	17-JAN-22

Quality Control Report

Test	Matrix	Reference	Result	Qualifier	Units	RPD	Limit	Analyzed
DUSTFALLS-ALL-DM2-VA	**Dustfall**							
Batch R5699196								
WG3684784-1 MB								
Total Soluble Dustfall			<0.10		mg/dm2.day		0.1	17-JAN-22
Fixed Dustfall			<0.10		mg/dm2.day		0.1	17-JAN-22
Fixed Insoluble Dustfall			<0.10		mg/dm2.day		0.1	17-JAN-22
Fixed Soluble Dustfall			<0.10		mg/dm2.day		0.1	17-JAN-22
Volatile Dustfall			<0.10		mg/dm2.day		0.1	17-JAN-22
Volatile Insoluble Dustfall			<0.10		mg/dm2.day		0.1	17-JAN-22
Volatile Soluble Dustfall			<0.10		mg/dm2.day		0.1	17-JAN-22
HG-DUST(DM2-CVAFS-VA	**Dustfall**							
Batch R5694798								
WG3684041-3 DUP		**L2670874-33**						
Mercury (Hg)-Total		<0.0000011	<0.0000011	RPD-NA	mg/dm2.day	N/A	20	13-JAN-22
WG3684041-2 LCS								
Mercury (Hg)-Total			87.8		%		70-130	13-JAN-22
WG3684041-1 MB								
Mercury (Hg)-Total			<0.0000013		mg/dm2.day		0.0000013	13-JAN-22
WG3684041-4 MS		**L2670874-34**						
Mercury (Hg)-Total			79.3		%		70-130	13-JAN-22
MET-DUST(DM2)-MS-VA	**Dustfall**							
Batch R5694337								
WG3684038-3 DUP		**L2670874-33**						
Aluminum (Al)-Total		0.0346	0.0338		mg/dm2.day	2.4	20	13-JAN-22
Antimony (Sb)-Total		0.0000048	0.0000034	J	mg/dm2.day	0.000001	0.0000042	13-JAN-22
Arsenic (As)-Total		<0.000041	<0.000032	RPD-NA	mg/dm2.day	N/A	20	13-JAN-22
Barium (Ba)-Total		0.000127	0.000125		mg/dm2.day	1.3	20	13-JAN-22
Beryllium (Be)-Total		<0.000011	<0.000011	RPD-NA	mg/dm2.day	N/A	20	13-JAN-22
Bismuth (Bi)-Total		<0.000011	<0.000011	RPD-NA	mg/dm2.day	N/A	20	13-JAN-22
Boron (B)-Total		<0.00021	<0.00021	RPD-NA	mg/dm2.day	N/A	20	13-JAN-22
Cadmium (Cd)-Total		0.0000041	0.0000040		mg/dm2.day	1.7	20	13-JAN-22
Calcium (Ca)-Total		0.0679	0.0636		mg/dm2.day	6.5	20	13-JAN-22
Chromium (Cr)-Total		0.000053	0.000049		mg/dm2.day	7.1	20	13-JAN-22
Cobalt (Co)-Total		0.0000084	0.0000077		mg/dm2.day	9.4	20	13-JAN-22
Copper (Cu)-Total		0.000236	0.000256		mg/dm2.day	8.2	20	13-JAN-22
Iron (Fe)-Total		0.0251	0.0245		mg/dm2.day	2.5	20	13-JAN-22
Lithium (Li)-Total		<0.00011	<0.00011	RPD-NA	mg/dm2.day	N/A	20	13-JAN-22
Magnesium (Mg)-Total		0.0171	0.0169		mg/dm2.day	0.7	20	13-JAN-22

Quality Control Report

Test	Matrix	Reference	Result	Qualifier	Units	RPD	Limit	Analyzed
MET-DUST(DM2)-MS-VA	**Dustfall**							
Batch R5694337								
WG3684038-3 DUP		**L2670874-33**						
Manganese (Mn)-Total		0.00145	0.00140		mg/dm2.day	4.0	20	13-JAN-22
Molybdenum (Mo)-Total		0.0000042	0.0000030	J	mg/dm2.day	0.000001	0.0000022	13-JAN-22
Nickel (Ni)-Total		0.000069	0.000066		mg/dm2.day	3.9	20	13-JAN-22
Phosphorus (P)-Total		0.0013	<0.0011	RPD-NA	mg/dm2.day	N/A	20	13-JAN-22
Potassium (K)-Total		0.0072	0.0064		mg/dm2.day	12	20	13-JAN-22
Selenium (Se)-Total		<0.000021	<0.000021	RPD-NA	mg/dm2.day	N/A	20	13-JAN-22
Silicon (Si)-Total		0.0443	0.0446		mg/dm2.day	0.7	20	13-JAN-22
Sodium (Na)-Total		0.0046	0.0046		mg/dm2.day	0.1	20	13-JAN-22
Strontium (Sr)-Total		0.000174	0.000165		mg/dm2.day	5.1	20	13-JAN-22
Thallium (Tl)-Total		<0.0000021	<0.0000021	RPD-NA	mg/dm2.day	N/A	20	13-JAN-22
Tin (Sn)-Total		<0.0000021	<0.0000021	RPD-NA	mg/dm2.day	N/A	20	13-JAN-22
Titanium (Ti)-Total		0.00064	0.00063		mg/dm2.day	1.9	20	13-JAN-22
Uranium (U)-Total		0.00000052	0.00000042		mg/dm2.day	20	20	13-JAN-22
Vanadium (V)-Total		0.000037	0.000036		mg/dm2.day	3.3	20	13-JAN-22
Zinc (Zn)-Total		0.000990	0.00105		mg/dm2.day	6.1	20	13-JAN-22
WG3684038-2 LCS								
Aluminum (Al)-Total			101.0		%		80-120	13-JAN-22
Antimony (Sb)-Total			105.0		%		80-120	13-JAN-22
Arsenic (As)-Total			101.8		%		80-120	13-JAN-22
Barium (Ba)-Total			97.9		%		80-120	13-JAN-22
Beryllium (Be)-Total			100.6		%		80-120	13-JAN-22
Bismuth (Bi)-Total			97.4		%		80-120	13-JAN-22
Boron (B)-Total			100.8		%		80-120	13-JAN-22
Cadmium (Cd)-Total			99.0		%		80-120	13-JAN-22
Calcium (Ca)-Total			100.3		%		80-120	13-JAN-22
Chromium (Cr)-Total			101.2		%		80-120	13-JAN-22
Cobalt (Co)-Total			100.4		%		80-120	13-JAN-22
Copper (Cu)-Total			99.5		%		80-120	13-JAN-22
Lead (Pb)-Total			97.4		%		80-120	13-JAN-22
Iron (Fe)-Total			103.4		%		80-120	13-JAN-22
Lithium (Li)-Total			102.2		%		80-120	13-JAN-22
Magnesium (Mg)-Total			101.9		%		80-120	13-JAN-22
Manganese (Mn)-Total			101.3		%		80-120	13-JAN-22
Molybdenum (Mo)-Total			101.3		%		80-120	13-JAN-22

Quality Control Report

Test	Matrix	Reference	Result	Qualifier	Units	RPD	Limit	Analyzed
MET-DUST(DM2)-MS-VA	**Dustfall**							
Batch R5694337								
WG3684038-2 LCS								
Nickel (Ni)-Total			100.4		%		80-120	13-JAN-22
Phosphorus (P)-Total			112.0		%		80-120	13-JAN-22
Potassium (K)-Total			102.8		%		80-120	13-JAN-22
Selenium (Se)-Total			107.3		%		80-120	13-JAN-22
Silicon (Si)-Total			103.2		%		80-120	13-JAN-22
Silver (Ag)-Total			89.4		%		80-120	13-JAN-22
Sodium (Na)-Total			98.2		%		80-120	13-JAN-22
Strontium (Sr)-Total			108.0		%		80-120	13-JAN-22
Thallium (Tl)-Total			96.7		%		80-120	13-JAN-22
Tin (Sn)-Total			94.7		%		80-120	13-JAN-22
Titanium (Ti)-Total			98.7		%		80-120	13-JAN-22
Uranium (U)-Total			100.4		%		80-120	13-JAN-22
Vanadium (V)-Total			101.6		%		80-120	13-JAN-22
Zinc (Zn)-Total			100.2		%		80-120	13-JAN-22
WG3684038-1 MB								
Aluminum (Al)-Total			<0.000079		mg/dm2.day		0.000079	13-JAN-22
Antimony (Sb)-Total			<0.0000026		mg/dm2.day		0.0000026	13-JAN-22
Arsenic (As)-Total			0.0000069	MB-LOR	mg/dm2.day		0.0000026	13-JAN-22
Barium (Ba)-Total			<0.0000013		mg/dm2.day		0.0000013	13-JAN-22
Beryllium (Be)-Total			<0.000013		mg/dm2.day		0.000013	13-JAN-22
Bismuth (Bi)-Total			<0.000013		mg/dm2.day		0.000013	13-JAN-22
Boron (B)-Total			<0.00026		mg/dm2.day		0.00026	13-JAN-22
Cadmium (Cd)-Total			<0.0000013		mg/dm2.day		0.0000013	13-JAN-22
Calcium (Ca)-Total			<0.00052		mg/dm2.day		0.00052	13-JAN-22
Chromium (Cr)-Total			<0.000013		mg/dm2.day		0.000013	13-JAN-22
Cobalt (Co)-Total			<0.0000026		mg/dm2.day		0.0000026	13-JAN-22
Copper (Cu)-Total			<0.000013		mg/dm2.day		0.000013	13-JAN-22
Lead (Pb)-Total			<0.0000013		mg/dm2.day		0.0000013	13-JAN-22
Iron (Fe)-Total			<0.00079		mg/dm2.day		0.00079	13-JAN-22
Lithium (Li)-Total			<0.00013		mg/dm2.day		0.00013	13-JAN-22
Magnesium (Mg)-Total			<0.00013		mg/dm2.day		0.00013	13-JAN-22
Manganese (Mn)-Total			<0.0000026		mg/dm2.day		0.0000026	13-JAN-22
Molybdenum (Mo)-Total			<0.0000013		mg/dm2.day		0.0000013	13-JAN-22
Nickel (Ni)-Total			<0.000013		mg/dm2.day		0.000013	13-JAN-22

Quality Control Report

Test	Matrix	Reference	Result	Qualifier	Units	RPD	Limit	Analyzed
MET-DUST(DM2)-MS-VA	**Dustfall**							
Batch R5694337								
WG3684038-1 MB								
Phosphorus (P)-Total			<0.0013		mg/dm2.day		0.0013	13-JAN-22
Potassium (K)-Total			<0.0013		mg/dm2.day		0.0013	13-JAN-22
Selenium (Se)-Total			<0.000026		mg/dm2.day		0.000026	13-JAN-22
Silicon (Si)-Total			<0.0013		mg/dm2.day		0.0013	13-JAN-22
Silver (Ag)-Total			<0.0000002		mg/dm2.day		0.00000026	13-JAN-22
Sodium (Na)-Total			<0.0013		mg/dm2.day		0.0013	13-JAN-22
Strontium (Sr)-Total			<0.0000026		mg/dm2.day		0.0000026	13-JAN-22
Thallium (Tl)-Total			<0.0000026		mg/dm2.day		0.0000026	13-JAN-22
Tin (Sn)-Total			<0.0000026		mg/dm2.day		0.0000026	13-JAN-22
Titanium (Ti)-Total			<0.00026		mg/dm2.day		0.00026	13-JAN-22
Uranium (U)-Total			<0.0000002		mg/dm2.day		0.00000026	13-JAN-22
Vanadium (V)-Total			<0.000026		mg/dm2.day		0.000026	13-JAN-22
Zinc (Zn)-Total			<0.000079		mg/dm2.day		0.000079	13-JAN-22
Batch R5698680								
WG3684997-3 DUP		**L2670874-33**						
Aluminum (Al)-Total		0.0346	0.0311		mg/dm2.day	3.7	20	16-JAN-22
Antimony (Sb)-Total		0.0000048	0.0000035		mg/dm2.day	11	20	16-JAN-22
Arsenic (As)-Total		<0.000041	0.0000194		mg/dm2.day	3.8	20	16-JAN-22
Barium (Ba)-Total		0.000127	0.000139		mg/dm2.day	3.6	20	16-JAN-22
Beryllium (Be)-Total		<0.000011	<0.000011	RPD-NA	mg/dm2.day	N/A	20	16-JAN-22
Bismuth (Bi)-Total		<0.000011	<0.000011	RPD-NA	mg/dm2.day	N/A	20	16-JAN-22
Boron (B)-Total		<0.00021	<0.00021	RPD-NA	mg/dm2.day	N/A	20	16-JAN-22
Cadmium (Cd)-Total		0.0000041	0.0000034		mg/dm2.day	3.8	20	16-JAN-22
Calcium (Ca)-Total		0.0679	0.0643		mg/dm2.day	3.6	20	16-JAN-22
Chromium (Cr)-Total		0.000053	0.000047		mg/dm2.day	7.6	20	16-JAN-22
Cobalt (Co)-Total		0.0000084	0.0000078		mg/dm2.day	0.9	20	16-JAN-22
Copper (Cu)-Total		0.000236	0.000223		mg/dm2.day	11	20	16-JAN-22
Lead (Pb)-Total		0.0000637	0.0000666		mg/dm2.day	4.5	20	16-JAN-22
Iron (Fe)-Total		0.0251	0.0233		mg/dm2.day	1.0	20	16-JAN-22
Lithium (Li)-Total		<0.00011	<0.00011	RPD-NA	mg/dm2.day	N/A	20	16-JAN-22
Magnesium (Mg)-Total		0.0171	0.0151		mg/dm2.day	3.4	20	16-JAN-22
Manganese (Mn)-Total		0.00145	0.00137		mg/dm2.day	0.3	20	16-JAN-22
Molybdenum (Mo)-Total		0.0000042	0.0000026		mg/dm2.day	5.9	20	16-JAN-22
Phosphorus (P)-Total		0.0013	<0.0011	RPD-NA	mg/dm2.day	N/A	20	16-JAN-22

Quality Control Report

Test	Matrix	Reference	Result	Qualifier	Units	RPD	Limit	Analyzed
MET-DUST(DM2)-MS-VA	**Dustfall**							
Batch R5698680								
WG3684997-3 DUP		**L2670874-33**						
Potassium (K)-Total		0.0072	0.0074		mg/dm2.day	3.5	20	16-JAN-22
Selenium (Se)-Total		<0.000021	<0.000021	RPD-NA	mg/dm2.day	N/A	20	16-JAN-22
Silicon (Si)-Total		0.0443	0.0460		mg/dm2.day	2.7	20	16-JAN-22
Silver (Ag)-Total		0.00000502	0.00000467		mg/dm2.day	7.2	20	16-JAN-22
Sodium (Na)-Total		0.0046	0.0046		mg/dm2.day	2.9	20	16-JAN-22
Strontium (Sr)-Total		0.000174	0.000154		mg/dm2.day	7.3	20	16-JAN-22
Thallium (Tl)-Total		<0.0000021	<0.0000021	RPD-NA	mg/dm2.day	N/A	20	16-JAN-22
Tin (Sn)-Total		<0.0000021	<0.0000021	RPD-NA	mg/dm2.day	N/A	20	16-JAN-22
Titanium (Ti)-Total		0.00064	0.00059		mg/dm2.day	7.6	20	16-JAN-22
Uranium (U)-Total		0.00000052	0.00000043	J	mg/dm2.day	0.000000	0.00000042	16-JAN-22
Vanadium (V)-Total		0.000037	0.000035		mg/dm2.day	1.5	20	16-JAN-22
Zinc (Zn)-Total		0.000990	0.000771		mg/dm2.day	2.5	20	16-JAN-22
WG3684997-1 MB								
Aluminum (Al)-Total			<0.000079		mg/dm2.day		0.000079	16-JAN-22
Antimony (Sb)-Total			<0.0000026		mg/dm2.day		0.0000026	16-JAN-22
Arsenic (As)-Total			<0.0000026		mg/dm2.day		0.0000026	16-JAN-22
Barium (Ba)-Total			<0.0000013		mg/dm2.day		0.0000013	16-JAN-22
Beryllium (Be)-Total			<0.000013		mg/dm2.day		0.000013	16-JAN-22
Bismuth (Bi)-Total			<0.000013		mg/dm2.day		0.000013	16-JAN-22
Boron (B)-Total			<0.00026		mg/dm2.day		0.00026	16-JAN-22
Cadmium (Cd)-Total			<0.0000013		mg/dm2.day		0.0000013	16-JAN-22
Calcium (Ca)-Total			<0.00052		mg/dm2.day		0.00052	16-JAN-22
Chromium (Cr)-Total			<0.000013		mg/dm2.day		0.000013	16-JAN-22
Cobalt (Co)-Total			<0.0000026		mg/dm2.day		0.0000026	16-JAN-22
Copper (Cu)-Total			<0.000013		mg/dm2.day		0.000013	16-JAN-22
Lead (Pb)-Total			<0.0000013		mg/dm2.day		0.0000013	16-JAN-22
Iron (Fe)-Total			<0.00079		mg/dm2.day		0.00079	16-JAN-22
Lithium (Li)-Total			<0.00013		mg/dm2.day		0.00013	16-JAN-22
Magnesium (Mg)-Total			<0.00013		mg/dm2.day		0.00013	16-JAN-22
Manganese (Mn)-Total			<0.0000026		mg/dm2.day		0.0000026	16-JAN-22
Molybdenum (Mo)-Total			<0.0000013		mg/dm2.day		0.0000013	16-JAN-22
Nickel (Ni)-Total			<0.000013		mg/dm2.day		0.000013	16-JAN-22
Phosphorus (P)-Total			<0.0013		mg/dm2.day		0.0013	16-JAN-22
Potassium (K)-Total			<0.0013		mg/dm2.day		0.0013	16-JAN-22

Quality Control Report

Test	Matrix	Reference	Result	Qualifier	Units	RPD	Limit	Analyzed
MET-DUST(DM2)-MS-VA	**Dustfall**							
Batch R5698680								
WG3684997-1 MB								
Selenium (Se)-Total			<0.000026		mg/dm2.day		0.000026	16-JAN-22
Silicon (Si)-Total			<0.0013		mg/dm2.day		0.0013	16-JAN-22
Silver (Ag)-Total			<0.0000002		mg/dm2.day		0.00000026	16-JAN-22
Sodium (Na)-Total			<0.0013		mg/dm2.day		0.0013	16-JAN-22
Strontium (Sr)-Total			<0.0000026		mg/dm2.day		0.0000026	16-JAN-22
Thallium (Tl)-Total			<0.0000026		mg/dm2.day		0.0000026	16-JAN-22
Tin (Sn)-Total			<0.0000026		mg/dm2.day		0.0000026	16-JAN-22
Titanium (Ti)-Total			<0.00026		mg/dm2.day		0.00026	16-JAN-22
Uranium (U)-Total			<0.0000002		mg/dm2.day		0.00000026	16-JAN-22
Vanadium (V)-Total			<0.000026		mg/dm2.day		0.000026	16-JAN-22
Zinc (Zn)-Total			<0.000079		mg/dm2.day		0.000079	16-JAN-22
Batch R5700038								
WG3684997-2 LCS								
Aluminum (Al)-Total			107.1		%		80-120	18-JAN-22
Antimony (Sb)-Total			112.6		%		80-120	18-JAN-22
Arsenic (As)-Total			108.3		%		80-120	18-JAN-22
Barium (Ba)-Total			102.3		%		80-120	18-JAN-22
Beryllium (Be)-Total			105.5		%		80-120	18-JAN-22
Bismuth (Bi)-Total			99.9		%		80-120	18-JAN-22
Boron (B)-Total			103.5		%		80-120	18-JAN-22
Cadmium (Cd)-Total			107.5		%		80-120	18-JAN-22
Calcium (Ca)-Total			103.2		%		80-120	18-JAN-22
Chromium (Cr)-Total			109.1		%		80-120	18-JAN-22
Cobalt (Co)-Total			105.8		%		80-120	18-JAN-22
Copper (Cu)-Total			105.2		%		80-120	18-JAN-22
Lead (Pb)-Total			104.1		%		80-120	18-JAN-22
Iron (Fe)-Total			99.95		%		80-120	18-JAN-22
Lithium (Li)-Total			105.4		%		80-120	18-JAN-22
Magnesium (Mg)-Total			111.8		%		80-120	18-JAN-22
Manganese (Mn)-Total			110.8		%		80-120	18-JAN-22
Molybdenum (Mo)-Total			106.5		%		80-120	18-JAN-22
Nickel (Ni)-Total			104.4		%		80-120	18-JAN-22
Phosphorus (P)-Total			106.6		%		80-120	18-JAN-22
Potassium (K)-Total			105.7		%		80-120	18-JAN-22

Quality Control Report

Test	Matrix	Reference	Result	Qualifier	Units	RPD	Limit	Analyzed
MET-DUST(DM2)-MS-VA	**Dustfall**							
Batch R5700038								
WG3684997-2 LCS								
Selenium (Se)-Total			101.5		%		80-120	18-JAN-22
Silicon (Si)-Total			104.1		%		80-120	18-JAN-22
Silver (Ag)-Total			97.8		%		80-120	18-JAN-22
Sodium (Na)-Total			109.4		%		80-120	18-JAN-22
Strontium (Sr)-Total			108.0		%		80-120	18-JAN-22
Thallium (Tl)-Total			84.5		%		80-120	18-JAN-22
Tin (Sn)-Total			106.0		%		80-120	18-JAN-22
Titanium (Ti)-Total			100.2		%		80-120	18-JAN-22
Uranium (U)-Total			109.7		%		80-120	18-JAN-22
Vanadium (V)-Total			110.5		%		80-120	18-JAN-22
Zinc (Zn)-Total			109.2		%		80-120	18-JAN-22

Quality Control Report

Legend:

Limit	ALS Control Limit (Data Quality Objectives)
DUP	Duplicate
RPD	Relative Percent Difference
N/A	Not Available
LCS	Laboratory Control Sample
SRM	Standard Reference Material
MS	Matrix Spike
MSD	Matrix Spike Duplicate
ADE	Average Desorption Efficiency
MB	Method Blank
IRM	Internal Reference Material
CRM	Certified Reference Material
CCV	Continuing Calibration Verification
CVS	Calibration Verification Standard
LCSD	Laboratory Control Sample Duplicate

Sample Parameter Qualifier Definitions:

Qualifier	Description
J	Duplicate results and limits are expressed in terms of absolute difference.
MB-LOR	Method Blank exceeds ALS DQO. Limits of Reporting have been adjusted for samples with positive hits below 5x blank level.
MS-B	Matrix Spike recovery could not be accurately calculated due to high analyte background in sample.
RPD-NA	Relative Percent Difference Not Available due to result(s) being less than detection limit.

Hold Time Exceedances:

All test results reported with this submission were conducted within ALS recommended hold times.

ALS recommended hold times may vary by province. They are assigned to meet known provincial and/or federal government requirements. In the absence of regulatory hold times, ALS establishes recommendations based on guidelines published by the US EPA, APHA Standard Methods, or Environment Canada (where available). For more information, please contact ALS.

The ALS Quality Control Report is provided to ALS clients upon request. ALS includes comprehensive QC checks with every analysis to ensure our high standards of quality are met. Each QC result has a known or expected target value, which is compared against pre-determined data quality objectives to provide confidence in the accuracy of associated test results.

Please note that this report may contain QC results from anonymous Sample Duplicates and Matrix Spikes that do not originate from this Work Order.

L2670874-COFC

Chain of Custody / Analytical Request Form
1435 Norjohn Court, Unit 1, Burlington, Ontario, Canada, L7L 0E
Tel +1-905-331-3111 Fax +1-905-331-4567 www.alsglobal.com

Report To		Report Format / Distribution		Service Requested
Company:	New Gold Inc.	☑ Standard ☐ Other:		☑ Regular Service
Contact:	Sarah Flesher	☑ PDF ☑ Excel ☐ Digital ☐ Fax		☐ Rush Service (with prior consultation) - surcharge applies
Address:	24 Marr Rd. Barwick ON P0W 1A0	Email 1:	sarah.flesher@newgold.com	☐ Other - Please contact ALS
Phone:	807-234-8200 ext. 8049 Fax:	Email 2:		
Invoice To	Same as Report ? ☑ Yes ☐ No	Client / Project Information		Analysis Request
Company:		Job #:	Air Quality	
Contact:		Location:		
Address:		PO:	450000093	
Phone:	Fax:	Sampled by		
Lab Work Order #		ALS Contact:		

Sample #	Sample Identification (This description will appear on the report)	Date (dd-mmm-yy)	Time (hh:mm)	Sample Type	TSP and Metals	Pm 2.5	Dustfall Incl. volatile								Hazardous? Provide Deta
1	SOUTH-TSP-391	31-Oct-2021	12:00	Air	X										
2	SOUTH-TSP-392	6-Nov-2021	12:00	Air	X										
3	SOUTH-TSP-393	12-Nov-2021	12:00	Air	X										
4	SOUTH-TSP-394	18-Nov-2021	12:00	Air	X										
5	SOUTH-TSP-395	24-Nov-2021	12:00	Air	X										
6	SOUTH-TSP-396	30-Nov-2021	12:00	Air	X										
7	NORTH-TSP-391	31-Oct-2021	12:00	Air	X										
8	NORTH-TSP-392	6-Nov-2021	12:00	Air	X										
9	NORTH-TSP-393	12-Nov-2021	12:00	Air	X										
10	NORTH-TSP-394	18-Nov-2021	12:00	Air	X										
11	NORTH-TSP-395	24-Nov-2021	12:00	Air	X										
12	NORTH-TSP-396	30-Nov-2021	12:00	Air	X										
13	NORTHWEST-TSP-391	31-Oct-2021	12:00	Air	X										
14	NORTHWEST-TSP-392	6-Nov-2021	12:00	Air	X										
15	NORTHWEST-TSP-393	12-Nov-2021	12:00	Air	X										
16	NORTHWEST-TSP-394	18-Nov-2021	12:00	Air	X										
17	NORTHWEST-TSP-395	24-Nov-2021	12:00	Air	X										
18	NORTHWEST-TSP-396	30-Nov-2021	12:00	Air	X										
19	SOUTH-PM2.5-391	31-Oct-2021	12:00	Air		X									
20	SOUTH-PM2.5-392	6-Nov-2021	12:00	Air		X									
21	SOUTH-PM2.5-393	12-Nov-2021	12:00	Air		X									
22	SOUTH-PM2.5-394	18-Nov-2021	12:00	Air		X									
23	SOUTH-PM2.5-395	24-Nov-2021	12:00	Air		X									
24	SOUTH-PM2.5-396	30-Nov-2021	12:00	Air		X									
25	NORTH-PM2.5-391	31-Oct-2021	12:00	Air		X									
26	NORTH-PM2.5-392	6-Nov-2021	12:00	Air		X									
27	NORTH-PM2.5-393	12-Nov-2021	12:00	Air		X									
28	NORTH-PM2.5-394	18-Nov-2021	12:00	Air		X									
29	NORTH-PM2.5-395	24-Nov-2021	12:00	Air		X									
30	NORTH-PM2.5-396	30-Nov-2021	12:00	Air		X									
31	NORTHWEST-PM2.5-395	24-Nov-2021	12:00	Air		X									
32	NORTHWEST-PM2.5-396	30-Nov-2021	12:00	Air		X									
33	NOP1-Dustfall-11	1-Dec-2021	12:00	Air			X								
34	CP1-Dustfall-11	1-Dec-2021	12:00	Air			X								
35	WCP1-Dustfall-11	1-Dec-2021	12:00	Air			X								
36	GH1-Dustfall-11	1-Dec-2021	12:00	Air			X								
37	SPP1-Dustfall-46	10-Nov-2021	12:00	Air			X								
38	SPP1-Dustfall-47	17-Nov-2021	12:00	Air			X								
39	SPP1-Dustfall-48	24-Nov-2021	12:00	Air			X								
40	SPP1-Dustfall-49	1-Dec-2021	12:00	Air			X								
41	Dustfall - Gallinger Road	1-Dec-2021	12:00	Air			X								
42	Dustfall - Tait Road (South)	1-Dec-2021	12:00	Air			X								
43	Dustfall- Northwest	1-Dec-2021	12:00	Air			X								

Special Instructions / Regulations / Hazardous Details

Please Note: Dustfall canisters are empty/ only partially full, please follow-through with sample analysis

By the use of this form the user acknowledges and agrees with the Terms and Conditions as provided by ALS

Released by:	Date (dd-mmm-yy)	Time (hh-mm)	Received by:	Date:	Time:	Temperature	Verified by	Date:	Time:	Obs
	3-Dec-2021	14:00	Aaron Bulton	9-Dec-2021	9:15	16.9 °C				Yes / If Ye

New Gold Inc. Rainy River Project
ATTN: Sarah Flesher
5967 Highway 11/71
P.O. Box 5
Emo ON P0W 1E0

Date Received: 10-JAN-22
Report Date: 31-JAN-22 08:23 (MT)
Version: FINAL

Client Phone: 807-234-8200

Certificate of Analysis

Lab Work Order #: L2677874
Project P.O. #: 4500050093
Job Reference:
C of C Numbers:
Legal Site Desc:

Claire Kocharakkal, B.Sc.
Project Manager

[This report shall not be reproduced except in full without the written authority of the Laboratory.]

ADDRESS: 1435 Norjohn Court, Unit 1, Burlington, ON, L7L 0E6 Canada | Phone: +1 905 331 3111 | Fax: +1 905 331 4567
ALS CANADA LTD Part of the ALS Group An ALS Limited Company

ALS ENVIRONMENTAL ANALYTICAL REPORT

Sample Details/Parameters	Result	Qualifier*	D.L.	Units	Extracted	Analyzed	Batch
L2677874-1 SOUTH-TSP-397							
Sampled By: Client on 06-DEC-21							
Matrix: Hi Vol Filter							
Miscellaneous Parameters							
Total particulate	12700		2300	ug		10-JAN-22	R5702339
Metals on High Volume Filter by ICPMS							
Arsenic (As)	<3.0		3.0	ug	24-JAN-22	25-JAN-22	R5710136
Cadmium (Cd)	<2.0		2.0	ug	24-JAN-22	25-JAN-22	R5710136
Cobalt (Co)	<2.0		2.0	ug	24-JAN-22	25-JAN-22	R5710136
Chromium (Cr)	<5.0		5.0	ug	24-JAN-22	25-JAN-22	R5710136
Copper (Cu)	96.3		4.0	ug	24-JAN-22	25-JAN-22	R5710136
Iron (Fe)	259		20	ug	24-JAN-22	25-JAN-22	R5710136
Manganese (Mn)	8.4		1.0	ug	24-JAN-22	25-JAN-22	R5710136
Nickel (Ni)	<3.0		3.0	ug	24-JAN-22	25-JAN-22	R5710136
Lead (Pb)	<3.0		3.0	ug	24-JAN-22	25-JAN-22	R5710136
Selenium (Se)	<10		10	ug	24-JAN-22	25-JAN-22	R5710136
Vanadium (V)	<5.0		5.0	ug	24-JAN-22	25-JAN-22	R5710136
Zinc (Zn)	16.5		5.0	ug	24-JAN-22	25-JAN-22	R5710136
L2677874-2 SOUTH-TSP-398							
Sampled By: Client on 12-DEC-21							
Matrix: Hi Vol Filter							
Miscellaneous Parameters							
Total particulate	10600		2300	ug		10-JAN-22	R5702339
Metals on High Volume Filter by ICPMS							
Arsenic (As)	<3.0		3.0	ug	24-JAN-22	25-JAN-22	R5710136
Cadmium (Cd)	<2.0		2.0	ug	24-JAN-22	25-JAN-22	R5710136
Cobalt (Co)	<2.0		2.0	ug	24-JAN-22	25-JAN-22	R5710136
Chromium (Cr)	<5.0		5.0	ug	24-JAN-22	25-JAN-22	R5710136
Copper (Cu)	64.4		4.0	ug	24-JAN-22	25-JAN-22	R5710136
Iron (Fe)	284		20	ug	24-JAN-22	25-JAN-22	R5710136
Manganese (Mn)	11.0		1.0	ug	24-JAN-22	25-JAN-22	R5710136
Nickel (Ni)	<3.0		3.0	ug	24-JAN-22	25-JAN-22	R5710136
Lead (Pb)	<3.0		3.0	ug	24-JAN-22	25-JAN-22	R5710136
Selenium (Se)	<10		10	ug	24-JAN-22	25-JAN-22	R5710136
Vanadium (V)	<5.0		5.0	ug	24-JAN-22	25-JAN-22	R5710136
Zinc (Zn)	12.4		5.0	ug	24-JAN-22	25-JAN-22	R5710136
L2677874-3 SOUTH-TSP-399							
Sampled By: Client on 18-DEC-21							
Matrix: Hi Vol Filter							
Miscellaneous Parameters							
Total particulate	12200		2300	ug		10-JAN-22	R5702339
Metals on High Volume Filter by ICPMS							
Arsenic (As)	<3.0		3.0	ug	24-JAN-22	25-JAN-22	R5710136
Cadmium (Cd)	<2.0		2.0	ug	24-JAN-22	25-JAN-22	R5710136
Cobalt (Co)	<2.0		2.0	ug	24-JAN-22	25-JAN-22	R5710136
Chromium (Cr)	<5.0		5.0	ug	24-JAN-22	25-JAN-22	R5710136
Copper (Cu)	163		4.0	ug	24-JAN-22	25-JAN-22	R5710136
Iron (Fe)	252		20	ug	24-JAN-22	25-JAN-22	R5710136
Manganese (Mn)	6.9		1.0	ug	24-JAN-22	25-JAN-22	R5710136
Nickel (Ni)	<3.0		3.0	ug	24-JAN-22	25-JAN-22	R5710136
Lead (Pb)	<3.0		3.0	ug	24-JAN-22	25-JAN-22	R5710136
Selenium (Se)	<10		10	ug	24-JAN-22	25-JAN-22	R5710136
Vanadium (V)	<5.0		5.0	ug	24-JAN-22	25-JAN-22	R5710136
Zinc (Zn)	14.2		5.0	ug	24-JAN-22	25-JAN-22	R5710136

* Refer to Referenced Information for Qualifiers (if any) and Methodology.

ALS ENVIRONMENTAL ANALYTICAL REPORT

Sample Details/Parameters	Result	Qualifier*	D.L.	Units	Extracted	Analyzed	Batch
L2677874-4 SOUTH-TSP-400							
Sampled By: Client on 24-DEC-21							
Matrix: Hi Vol Filter							
Miscellaneous Parameters							
Total particulate	22900		2300	ug		10-JAN-22	R5702339
Metals on High Volume Filter by ICPMS							
Arsenic (As)	<3.0		3.0	ug	24-JAN-22	25-JAN-22	R5710136
Cadmium (Cd)	<2.0		2.0	ug	24-JAN-22	25-JAN-22	R5710136
Cobalt (Co)	<2.0		2.0	ug	24-JAN-22	25-JAN-22	R5710136
Chromium (Cr)	<5.0		5.0	ug	24-JAN-22	25-JAN-22	R5710136
Copper (Cu)	60.8		4.0	ug	24-JAN-22	25-JAN-22	R5710136
Iron (Fe)	399		20	ug	24-JAN-22	25-JAN-22	R5710136
Manganese (Mn)	13.2		1.0	ug	24-JAN-22	25-JAN-22	R5710136
Nickel (Ni)	<3.0		3.0	ug	24-JAN-22	25-JAN-22	R5710136
Lead (Pb)	4.3		3.0	ug	24-JAN-22	25-JAN-22	R5710136
Selenium (Se)	<10		10	ug	24-JAN-22	25-JAN-22	R5710136
Vanadium (V)	<5.0		5.0	ug	24-JAN-22	25-JAN-22	R5710136
Zinc (Zn)	29.1		5.0	ug	24-JAN-22	25-JAN-22	R5710136
L2677874-5 SOUTH-TSP-401							
Sampled By: Client on 30-DEC-21							
Matrix: Hi Vol Filter							
Miscellaneous Parameters							
Total particulate	14600		2300	ug		10-JAN-22	R5702339
Metals on High Volume Filter by ICPMS							
Arsenic (As)	<3.0		3.0	ug	24-JAN-22	25-JAN-22	R5710136
Cadmium (Cd)	<2.0		2.0	ug	24-JAN-22	25-JAN-22	R5710136
Cobalt (Co)	<2.0		2.0	ug	24-JAN-22	25-JAN-22	R5710136
Chromium (Cr)	<5.0		5.0	ug	24-JAN-22	25-JAN-22	R5710136
Copper (Cu)	166		4.0	ug	24-JAN-22	25-JAN-22	R5710136
Iron (Fe)	110		20	ug	24-JAN-22	25-JAN-22	R5710136
Manganese (Mn)	3.6		1.0	ug	24-JAN-22	25-JAN-22	R5710136
Nickel (Ni)	<3.0		3.0	ug	24-JAN-22	25-JAN-22	R5710136
Lead (Pb)	<3.0		3.0	ug	24-JAN-22	25-JAN-22	R5710136
Selenium (Se)	<10		10	ug	24-JAN-22	25-JAN-22	R5710136
Vanadium (V)	<5.0		5.0	ug	24-JAN-22	25-JAN-22	R5710136
Zinc (Zn)	14.6		5.0	ug	24-JAN-22	25-JAN-22	R5710136
L2677874-6 NORTH-TSP-397							
Sampled By: Client on 06-DEC-21							
Matrix: Hi Vol Filter							
Miscellaneous Parameters							
Total particulate	57300		2300	ug		10-JAN-22	R5702339
Metals on High Volume Filter by ICPMS							
Arsenic (As)	<3.0		3.0	ug	24-JAN-22	25-JAN-22	R5710136
Cadmium (Cd)	<2.0		2.0	ug	24-JAN-22	25-JAN-22	R5710136
Cobalt (Co)	<2.0		2.0	ug	24-JAN-22	25-JAN-22	R5710136
Chromium (Cr)	<5.0		5.0	ug	24-JAN-22	25-JAN-22	R5710136
Copper (Cu)	131		4.0	ug	24-JAN-22	25-JAN-22	R5710136
Iron (Fe)	1240		20	ug	24-JAN-22	25-JAN-22	R5710136
Manganese (Mn)	35.2		1.0	ug	24-JAN-22	25-JAN-22	R5710136
Nickel (Ni)	<3.0		3.0	ug	24-JAN-22	25-JAN-22	R5710136
Lead (Pb)	3.4		3.0	ug	24-JAN-22	25-JAN-22	R5710136
Selenium (Se)	<10		10	ug	24-JAN-22	25-JAN-22	R5710136
Vanadium (V)	<5.0		5.0	ug	24-JAN-22	25-JAN-22	R5710136
Zinc (Zn)	39.7		5.0	ug	24-JAN-22	25-JAN-22	R5710136

* Refer to Referenced Information for Qualifiers (if any) and Methodology.

ALS ENVIRONMENTAL ANALYTICAL REPORT

Sample Details/Parameters	Result	Qualifier*	D.L.	Units	Extracted	Analyzed	Batch
L2677874-7 NORTH-TSP-398							
Sampled By: Client on 12-DEC-21							
Matrix: Hi Vol Filter							
Miscellaneous Parameters							
Total particulate	<2300		2300	ug		10-JAN-22	R5702339
Metals on High Volume Filter by ICPMS							
Arsenic (As)	<3.0		3.0	ug	24-JAN-22	25-JAN-22	R5710136
Cadmium (Cd)	<2.0		2.0	ug	24-JAN-22	25-JAN-22	R5710136
Cobalt (Co)	<2.0		2.0	ug	24-JAN-22	25-JAN-22	R5710136
Chromium (Cr)	<5.0		5.0	ug	24-JAN-22	25-JAN-22	R5710136
Copper (Cu)	<4.0		4.0	ug	24-JAN-22	25-JAN-22	R5710136
Iron (Fe)	24		20	ug	24-JAN-22	25-JAN-22	R5710136
Manganese (Mn)	<1.0		1.0	ug	24-JAN-22	25-JAN-22	R5710136
Nickel (Ni)	<3.0		3.0	ug	24-JAN-22	25-JAN-22	R5710136
Lead (Pb)	<3.0		3.0	ug	24-JAN-22	25-JAN-22	R5710136
Selenium (Se)	<10		10	ug	24-JAN-22	25-JAN-22	R5710136
Vanadium (V)	<5.0		5.0	ug	24-JAN-22	25-JAN-22	R5710136
Zinc (Zn)	<5.0		5.0	ug	24-JAN-22	25-JAN-22	R5710136
L2677874-8 NORTH-TSP-399							
Sampled By: Client on 18-DEC-21							
Matrix: Hi Vol Filter							
Miscellaneous Parameters							
Total particulate	24300		2300	ug		10-JAN-22	R5702339
Metals on High Volume Filter by ICPMS							
Arsenic (As)	<3.0		3.0	ug	24-JAN-22	25-JAN-22	R5710136
Cadmium (Cd)	<2.0		2.0	ug	24-JAN-22	25-JAN-22	R5710136
Cobalt (Co)	<2.0		2.0	ug	24-JAN-22	25-JAN-22	R5710136
Chromium (Cr)	<5.0		5.0	ug	24-JAN-22	25-JAN-22	R5710136
Copper (Cu)	143		4.0	ug	24-JAN-22	25-JAN-22	R5710136
Iron (Fe)	572		20	ug	24-JAN-22	25-JAN-22	R5710136
Manganese (Mn)	14.0		1.0	ug	24-JAN-22	25-JAN-22	R5710136
Nickel (Ni)	<3.0		3.0	ug	24-JAN-22	25-JAN-22	R5710136
Lead (Pb)	<3.0		3.0	ug	24-JAN-22	25-JAN-22	R5710136
Selenium (Se)	<10		10	ug	24-JAN-22	25-JAN-22	R5710136
Vanadium (V)	<5.0		5.0	ug	24-JAN-22	25-JAN-22	R5710136
Zinc (Zn)	26.8		5.0	ug	24-JAN-22	25-JAN-22	R5710136
L2677874-9 NORTH-TSP-400							
Sampled By: Client on 24-DEC-21							
Matrix: Hi Vol Filter							
Miscellaneous Parameters							
Total particulate	104000		2300	ug		10-JAN-22	R5702339
Metals on High Volume Filter by ICPMS							
Arsenic (As)	<3.0		3.0	ug	24-JAN-22	25-JAN-22	R5710136
Cadmium (Cd)	<2.0		2.0	ug	24-JAN-22	25-JAN-22	R5710136
Cobalt (Co)	<2.0		2.0	ug	24-JAN-22	25-JAN-22	R5710136
Chromium (Cr)	<5.0		5.0	ug	24-JAN-22	25-JAN-22	R5710136
Copper (Cu)	100		4.0	ug	24-JAN-22	25-JAN-22	R5710136
Iron (Fe)	2210		20	ug	24-JAN-22	25-JAN-22	R5710136
Manganese (Mn)	81.5		1.0	ug	24-JAN-22	25-JAN-22	R5710136
Nickel (Ni)	7.1		3.0	ug	24-JAN-22	25-JAN-22	R5710136
Lead (Pb)	8.1		3.0	ug	24-JAN-22	25-JAN-22	R5710136
Selenium (Se)	<10		10	ug	24-JAN-22	25-JAN-22	R5710136
Vanadium (V)	<5.0		5.0	ug	24-JAN-22	25-JAN-22	R5710136
Zinc (Zn)	103		5.0	ug	24-JAN-22	25-JAN-22	R5710136

* Refer to Referenced Information for Qualifiers (if any) and Methodology.

ALS ENVIRONMENTAL ANALYTICAL REPORT

Sample Details/Parameters	Result	Qualifier*	D.L.	Units	Extracted	Analyzed	Batch
L2677874-10 NORTH-TSP-401							
Sampled By: Client on 30-DEC-21							
Matrix: Hi Vol Filter							
Miscellaneous Parameters							
Total particulate	14000		2300	ug		10-JAN-22	R5702339
Metals on High Volume Filter by ICPMS							
Arsenic (As)	<3.0		3.0	ug	24-JAN-22	25-JAN-22	R5710136
Cadmium (Cd)	<2.0		2.0	ug	24-JAN-22	25-JAN-22	R5710136
Cobalt (Co)	<2.0		2.0	ug	24-JAN-22	25-JAN-22	R5710136
Chromium (Cr)	<5.0		5.0	ug	24-JAN-22	25-JAN-22	R5710136
Copper (Cu)	367		4.0	ug	24-JAN-22	25-JAN-22	R5710136
Iron (Fe)	173		20	ug	24-JAN-22	25-JAN-22	R5710136
Manganese (Mn)	5.0		1.0	ug	24-JAN-22	25-JAN-22	R5710136
Nickel (Ni)	<3.0		3.0	ug	24-JAN-22	25-JAN-22	R5710136
Lead (Pb)	<3.0		3.0	ug	24-JAN-22	25-JAN-22	R5710136
Selenium (Se)	<10		10	ug	24-JAN-22	25-JAN-22	R5710136
Vanadium (V)	<5.0		5.0	ug	24-JAN-22	25-JAN-22	R5710136
Zinc (Zn)	14.6		5.0	ug	24-JAN-22	25-JAN-22	R5710136
L2677874-11 NORTHWEST-TSP-397							
Sampled By: Client on 06-DEC-21							
Matrix: Hi Vol Filter							
Miscellaneous Parameters							
Total particulate	10700		2300	ug		10-JAN-22	R5702339
Metals on High Volume Filter by ICPMS							
Arsenic (As)	<3.0		3.0	ug	24-JAN-22	25-JAN-22	R5710136
Cadmium (Cd)	<2.0		2.0	ug	24-JAN-22	25-JAN-22	R5710136
Cobalt (Co)	<2.0		2.0	ug	24-JAN-22	25-JAN-22	R5710136
Chromium (Cr)	<5.0		5.0	ug	24-JAN-22	25-JAN-22	R5710136
Copper (Cu)	77.9		4.0	ug	24-JAN-22	25-JAN-22	R5710136
Iron (Fe)	244		20	ug	24-JAN-22	25-JAN-22	R5710136
Manganese (Mn)	6.5		1.0	ug	24-JAN-22	25-JAN-22	R5710136
Nickel (Ni)	<3.0		3.0	ug	24-JAN-22	25-JAN-22	R5710136
Lead (Pb)	<3.0		3.0	ug	24-JAN-22	25-JAN-22	R5710136
Selenium (Se)	<10		10	ug	24-JAN-22	25-JAN-22	R5710136
Vanadium (V)	<5.0		5.0	ug	24-JAN-22	25-JAN-22	R5710136
Zinc (Zn)	16.7		5.0	ug	24-JAN-22	25-JAN-22	R5710136
L2677874-12 NORTHWEST-TSP-398							
Sampled By: Client on 12-DEC-21							
Matrix: Hi Vol Filter							
Miscellaneous Parameters							
Total particulate	10700		2300	ug		10-JAN-22	R5702339
Metals on High Volume Filter by ICPMS							
Arsenic (As)	<3.0		3.0	ug	24-JAN-22	25-JAN-22	R5710136
Cadmium (Cd)	<2.0		2.0	ug	24-JAN-22	25-JAN-22	R5710136
Cobalt (Co)	<2.0		2.0	ug	24-JAN-22	25-JAN-22	R5710136
Chromium (Cr)	<5.0		5.0	ug	24-JAN-22	25-JAN-22	R5710136
Copper (Cu)	147		4.0	ug	24-JAN-22	25-JAN-22	R5710136
Iron (Fe)	266		20	ug	24-JAN-22	25-JAN-22	R5710136
Manganese (Mn)	10.1		1.0	ug	24-JAN-22	25-JAN-22	R5710136
Nickel (Ni)	<3.0		3.0	ug	24-JAN-22	25-JAN-22	R5710136
Lead (Pb)	<3.0		3.0	ug	24-JAN-22	25-JAN-22	R5710136
Selenium (Se)	<10		10	ug	24-JAN-22	25-JAN-22	R5710136
Vanadium (V)	<5.0		5.0	ug	24-JAN-22	25-JAN-22	R5710136
Zinc (Zn)	14.2		5.0	ug	24-JAN-22	25-JAN-22	R5710136

* Refer to Referenced Information for Qualifiers (if any) and Methodology.

ALS ENVIRONMENTAL ANALYTICAL REPORT

Sample Details/Parameters	Result	Qualifier*	D.L.	Units	Extracted	Analyzed	Batch
L2677874-13 NORTHWEST-TSP-399							
Sampled By: Client on 18-DEC-21							
Matrix: Hi Vol Filter							
Miscellaneous Parameters							
Total particulate	10000		2300	ug		10-JAN-22	R5702339
Metals on High Volume Filter by ICPMS							
Arsenic (As)	<3.0		3.0	ug	24-JAN-22	25-JAN-22	R5710136
Cadmium (Cd)	<2.0		2.0	ug	24-JAN-22	25-JAN-22	R5710136
Cobalt (Co)	<2.0		2.0	ug	24-JAN-22	25-JAN-22	R5710136
Chromium (Cr)	<5.0		5.0	ug	24-JAN-22	25-JAN-22	R5710136
Copper (Cu)	278		4.0	ug	24-JAN-22	25-JAN-22	R5710136
Iron (Fe)	345		20	ug	24-JAN-22	25-JAN-22	R5710136
Manganese (Mn)	9.5		1.0	ug	24-JAN-22	25-JAN-22	R5710136
Nickel (Ni)	<3.0		3.0	ug	24-JAN-22	25-JAN-22	R5710136
Lead (Pb)	<3.0		3.0	ug	24-JAN-22	25-JAN-22	R5710136
Selenium (Se)	<10		10	ug	24-JAN-22	25-JAN-22	R5710136
Vanadium (V)	<5.0		5.0	ug	24-JAN-22	25-JAN-22	R5710136
Zinc (Zn)	17.8		5.0	ug	24-JAN-22	25-JAN-22	R5710136
L2677874-14 NORTHWEST-TSP-400							
Sampled By: Client on 24-DEC-21							
Matrix: Hi Vol Filter							
Miscellaneous Parameters							
Total particulate	11200		2300	ug		10-JAN-22	R5702339
Metals on High Volume Filter by ICPMS							
Arsenic (As)	<3.0		3.0	ug	24-JAN-22	25-JAN-22	R5710136
Cadmium (Cd)	<2.0		2.0	ug	24-JAN-22	25-JAN-22	R5710136
Cobalt (Co)	<2.0		2.0	ug	24-JAN-22	25-JAN-22	R5710136
Chromium (Cr)	<5.0		5.0	ug	24-JAN-22	25-JAN-22	R5710136
Copper (Cu)	63.0		4.0	ug	24-JAN-22	25-JAN-22	R5710136
Iron (Fe)	352		20	ug	24-JAN-22	25-JAN-22	R5710136
Manganese (Mn)	9.9		1.0	ug	24-JAN-22	25-JAN-22	R5710136
Nickel (Ni)	<3.0		3.0	ug	24-JAN-22	25-JAN-22	R5710136
Lead (Pb)	3.6		3.0	ug	24-JAN-22	25-JAN-22	R5710136
Selenium (Se)	<10		10	ug	24-JAN-22	25-JAN-22	R5710136
Vanadium (V)	<5.0		5.0	ug	24-JAN-22	25-JAN-22	R5710136
Zinc (Zn)	36.8		5.0	ug	24-JAN-22	25-JAN-22	R5710136
L2677874-15 NORTHWEST-TSP-401							
Sampled By: Client on 30-DEC-21							
Matrix: Hi Vol Filter							
Miscellaneous Parameters							
Total particulate	25500		2300	ug		10-JAN-22	R5702339
Metals on High Volume Filter by ICPMS							
Arsenic (As)	<3.0		3.0	ug	24-JAN-22	25-JAN-22	R5710136
Cadmium (Cd)	<2.0		2.0	ug	24-JAN-22	25-JAN-22	R5710136
Cobalt (Co)	<2.0		2.0	ug	24-JAN-22	25-JAN-22	R5710136
Chromium (Cr)	<5.0		5.0	ug	24-JAN-22	25-JAN-22	R5710136
Copper (Cu)	203		4.0	ug	24-JAN-22	25-JAN-22	R5710136
Iron (Fe)	231		20	ug	24-JAN-22	25-JAN-22	R5710136
Manganese (Mn)	7.4		1.0	ug	24-JAN-22	25-JAN-22	R5710136
Nickel (Ni)	<3.0		3.0	ug	24-JAN-22	25-JAN-22	R5710136
Lead (Pb)	<3.0		3.0	ug	24-JAN-22	25-JAN-22	R5710136
Selenium (Se)	<10		10	ug	24-JAN-22	25-JAN-22	R5710136
Vanadium (V)	<5.0		5.0	ug	24-JAN-22	25-JAN-22	R5710136
Zinc (Zn)	15.3		5.0	ug	24-JAN-22	25-JAN-22	R5710136

* Refer to Referenced Information for Qualifiers (if any) and Methodology.

ALS ENVIRONMENTAL ANALYTICAL REPORT

Sample Details/Parameters	Result	Qualifier*	D.L.	Units	Extracted	Analyzed	Batch
L2677874-16 TSP-TRAVEL BLANK							
Sampled By: Client on 05-JAN-22							
Matrix: Hi Vol Filter							
Miscellaneous Parameters							
Total particulate	<2300		2300	ug		10-JAN-22	R5702339
Metals on High Volume Filter by ICPMS							
Arsenic (As)	<3.0		3.0	ug	24-JAN-22	25-JAN-22	R5710136
Cadmium (Cd)	<2.0		2.0	ug	24-JAN-22	25-JAN-22	R5710136
Cobalt (Co)	<2.0		2.0	ug	24-JAN-22	25-JAN-22	R5710136
Chromium (Cr)	<5.0		5.0	ug	24-JAN-22	25-JAN-22	R5710136
Copper (Cu)	<4.0		4.0	ug	24-JAN-22	25-JAN-22	R5710136
Iron (Fe)	<20		20	ug	24-JAN-22	25-JAN-22	R5710136
Manganese (Mn)	<1.0		1.0	ug	24-JAN-22	25-JAN-22	R5710136
Nickel (Ni)	<3.0		3.0	ug	24-JAN-22	25-JAN-22	R5710136
Lead (Pb)	<3.0		3.0	ug	24-JAN-22	25-JAN-22	R5710136
Selenium (Se)	<10		10	ug	24-JAN-22	25-JAN-22	R5710136
Vanadium (V)	<5.0		5.0	ug	24-JAN-22	25-JAN-22	R5710136
Zinc (Zn)	<5.0		5.0	ug	24-JAN-22	25-JAN-22	R5710136
L2677874-17 SOUTH-PM2.5-397							
Sampled By: Client on 06-DEC-21							
Matrix: 47mm Filter							
Miscellaneous Parameters							
Total particulate	67		15	ug		30-JAN-22	R5711709
L2677874-18 SOUTH-PM2.5-398							
Sampled By: Client on 12-DEC-21							
Matrix: 47mm Filter							
Miscellaneous Parameters							
Total particulate	39		15	ug		30-JAN-22	R5711709
L2677874-19 SOUTH-PM2.5-399							
Sampled By: Client on 18-DEC-21							
Matrix: 47mm Filter							
Miscellaneous Parameters							
Total particulate	44		15	ug		30-JAN-22	R5711709
L2677874-20 SOUTH-PM2.5-400							
Sampled By: Client on 24-DEC-21							
Matrix: 47mm Filter							
Miscellaneous Parameters							
Total particulate	144		15	ug		30-JAN-22	R5711709
L2677874-21 SOUTH-PM2.5-401							
Sampled By: Client on 30-DEC-21							
Matrix: 47mm Filter							
Miscellaneous Parameters							
Total particulate	89		15	ug		30-JAN-22	R5711709
L2677874-22 NORTH-PM2.5-397							
Sampled By: Client on 06-DEC-21							
Matrix: 47mm Filter							
Miscellaneous Parameters							
Total particulate	<15		15	ug		30-JAN-22	R5711709
L2677874-23 NORTH-PM2.5-398							
Sampled By: Client on 12-DEC-21							
Matrix: 47mm Filter							
Miscellaneous Parameters							

* Refer to Referenced Information for Qualifiers (if any) and Methodology.

ALS ENVIRONMENTAL ANALYTICAL REPORT

Sample Details/Parameters	Result	Qualifier*	D.L.	Units	Extracted	Analyzed	Batch
L2677874-23 NORTH-PM2.5-398							
Sampled By: Client on 12-DEC-21							
Matrix: 47mm Filter							
Total particulate	103		15	ug		30-JAN-22	R5711709
L2677874-24 NORTH-PM2.5-399							
Sampled By: Client on 18-DEC-21							
Matrix: 47mm Filter							
Miscellaneous Parameters							
Total particulate	33		15	ug		30-JAN-22	R5711709
L2677874-25 NORTH-PM2.5-400							
Sampled By: Client on 24-DEC-21							
Matrix: 47mm Filter							
Miscellaneous Parameters							
Total particulate	197		15	ug		30-JAN-22	R5711709
L2677874-26 NORTH-PM2.5-401							
Sampled By: Client on 30-DEC-21							
Matrix: 47mm Filter							
Miscellaneous Parameters							
Total particulate	183		15	ug		30-JAN-22	R5711709
L2677874-27 NORTHWEST-PM2.5-397							
Sampled By: Client on 06-DEC-21							
Matrix: 47mm Filter							
Miscellaneous Parameters							
Total particulate	183		15	ug		30-JAN-22	R5711709
L2677874-28 NORTHWEST-PM2.5-398							
Sampled By: Client on 12-DEC-21							
Matrix: 47mm Filter							
Miscellaneous Parameters							
Total particulate	77		15	ug		30-JAN-22	R5711709
L2677874-29 NORTHWEST-PM2.5-399							
Sampled By: Client on 18-DEC-21							
Matrix: 47mm Filter							
Miscellaneous Parameters							
Total particulate	37		15	ug		30-JAN-22	R5711709
L2677874-30 NORTHWEST-PM2.5-400							
Sampled By: Client on 24-DEC-21							
Matrix: 47mm Filter							
Miscellaneous Parameters							
Total particulate	270		15	ug		30-JAN-22	R5711709
L2677874-31 NORTHWEST-PM2.5-401							
Sampled By: Client on 30-DEC-21							
Matrix: 47mm Filter							
Miscellaneous Parameters							
Total particulate	83		15	ug		30-JAN-22	R5711709
L2677874-32 PM2.5-TRAVEL BLANK							
Sampled By: Client on 05-JAN-22							
Matrix: 47mm Filter							
Miscellaneous Parameters							
Total particulate	<15		15	ug		30-JAN-22	R5711709

* Refer to Referenced Information for Qualifiers (if any) and Methodology.

ALS ENVIRONMENTAL ANALYTICAL REPORT

Sample Details/Parameters	Result	Qualifier*	D.L.	Units	Extracted	Analyzed	Batch
L2677874-33 NOP1-DUSTFALL-12							
Sampled By: Client on 31-DEC-21							
Matrix: Dustfall							
Dustfalls-Total, Soluble, Insoluble +FV							
Total Dustfall	3.05		0.10	mg/dm2.day		26-JAN-22	R5711528
Total Insoluble Dustfall	2.86		0.10	mg/dm2.day		26-JAN-22	R5711528
Total Soluble Dustfall	0.19		0.10	mg/dm2.day		26-JAN-22	R5711528
Fixed Dustfall	2.91		0.10	mg/dm2.day		26-JAN-22	R5711528
Fixed Insoluble Dustfall	2.82		0.10	mg/dm2.day		26-JAN-22	R5711528
Fixed Soluble Dustfall	<0.10		0.10	mg/dm2.day		26-JAN-22	R5711528
Volatile Dustfall	0.14		0.10	mg/dm2.day		26-JAN-22	R5711528
Volatile Insoluble Dustfall	<0.10		0.10	mg/dm2.day		26-JAN-22	R5711528
Volatile Soluble Dustfall	0.10		0.10	mg/dm2.day		26-JAN-22	R5711528
Interval			1	days		27-JAN-22	R5709251
Mercury (Hg)-Total	<0.00000075		0.00000075	mg/dm2.day	27-JAN-22	27-JAN-22	R5710401
Total Metals in Dustfalls by ICPMS							
Aluminum (Al)-Total	0.0456		0.000045	mg/dm2.day	27-JAN-22	28-JAN-22	R5711423
Interval			1	days		27-JAN-22	R5710522
Antimony (Sb)-Total	0.0000031		0.0000015	mg/dm2.day	27-JAN-22	28-JAN-22	R5711423
Arsenic (As)-Total	0.0000501		0.0000015	mg/dm2.day	27-JAN-22	28-JAN-22	R5711423
Barium (Ba)-Total	0.000203		0.00000075	mg/dm2.day	27-JAN-22	28-JAN-22	R5711423
Beryllium (Be)-Total	<0.0000075		0.0000075	mg/dm2.day	27-JAN-22	28-JAN-22	R5711423
Bismuth (Bi)-Total	0.0000094		0.0000075	mg/dm2.day	27-JAN-22	28-JAN-22	R5711423
Boron (B)-Total	<0.00015		0.00015	mg/dm2.day	27-JAN-22	28-JAN-22	R5711423
Cadmium (Cd)-Total	0.00000294		0.00000075	mg/dm2.day	27-JAN-22	28-JAN-22	R5711423
Calcium (Ca)-Total	0.0615		0.00030	mg/dm2.day	27-JAN-22	28-JAN-22	R5711423
Chromium (Cr)-Total	0.0000479		0.0000075	mg/dm2.day	27-JAN-22	28-JAN-22	R5711423
Cobalt (Co)-Total	0.0000099		0.0000015	mg/dm2.day	27-JAN-22	28-JAN-22	R5711423
Copper (Cu)-Total	0.000322		0.0000075	mg/dm2.day	27-JAN-22	28-JAN-22	R5711423
Lead (Pb)-Total	0.0000620		0.00000075	mg/dm2.day	27-JAN-22	28-JAN-22	R5711423
Iron (Fe)-Total	0.0332		0.00045	mg/dm2.day	27-JAN-22	28-JAN-22	R5711423
Lithium (Li)-Total	<0.000075		0.000075	mg/dm2.day	27-JAN-22	28-JAN-22	R5711423
Magnesium (Mg)-Total	0.0188		0.000075	mg/dm2.day	27-JAN-22	28-JAN-22	R5711423
Manganese (Mn)-Total	0.00127		0.0000015	mg/dm2.day	27-JAN-22	28-JAN-22	R5711423
Molybdenum (Mo)-Total	0.00000554		0.00000075	mg/dm2.day	27-JAN-22	28-JAN-22	R5711423
Nickel (Ni)-Total	0.0000617		0.0000075	mg/dm2.day	27-JAN-22	28-JAN-22	R5711423
Phosphorus (P)-Total	0.00093		0.00075	mg/dm2.day	27-JAN-22	28-JAN-22	R5711423
Potassium (K)-Total	0.00949		0.00075	mg/dm2.day	27-JAN-22	28-JAN-22	R5711423
Selenium (Se)-Total	<0.000015		0.000015	mg/dm2.day	27-JAN-22	28-JAN-22	R5711423
Silicon (Si)-Total	0.0629		0.00075	mg/dm2.day	27-JAN-22	28-JAN-22	R5711423
Silver (Ag)-Total	0.00000267		0.00000015	mg/dm2.day	27-JAN-22	28-JAN-22	R5711423
Sodium (Na)-Total	0.00511		0.00075	mg/dm2.day	27-JAN-22	28-JAN-22	R5711423
Strontium (Sr)-Total	0.000193		0.0000015	mg/dm2.day	27-JAN-22	28-JAN-22	R5711423
Thallium (Tl)-Total	<0.0000015		0.0000015	mg/dm2.day	27-JAN-22	28-JAN-22	R5711423
Tin (Sn)-Total	0.0000033		0.0000015	mg/dm2.day	27-JAN-22	28-JAN-22	R5711423
Titanium (Ti)-Total	0.00066		0.00015	mg/dm2.day	27-JAN-22	28-JAN-22	R5711423
Uranium (U)-Total	0.00000060		0.00000015	mg/dm2.day	27-JAN-22	28-JAN-22	R5711423
Vanadium (V)-Total	0.000049		0.000015	mg/dm2.day	27-JAN-22	28-JAN-22	R5711423
Zinc (Zn)-Total	0.000753		0.000045	mg/dm2.day	27-JAN-22	28-JAN-22	R5711423

* Refer to Referenced Information for Qualifiers (if any) and Methodology.

ALS ENVIRONMENTAL ANALYTICAL REPORT

Sample Details/Parameters	Result	Qualifier*	D.L.	Units	Extracted	Analyzed	Batch
L2677874-34 CP1-DUSTFALL-12							
Sampled By: Client on 04-JAN-22							
Matrix: Dustfall							
Dustfalls-Total, Soluble, Insoluble +FV							
Total Dustfall	0.92		0.10	mg/dm2.day		26-JAN-22	R5711528
Total Insoluble Dustfall	0.82		0.10	mg/dm2.day		26-JAN-22	R5711528
Total Soluble Dustfall	0.10		0.10	mg/dm2.day		26-JAN-22	R5711528
Fixed Dustfall	0.83		0.10	mg/dm2.day		26-JAN-22	R5711528
Fixed Insoluble Dustfall	0.83		0.10	mg/dm2.day		26-JAN-22	R5711528
Fixed Soluble Dustfall	<0.10		0.10	mg/dm2.day		26-JAN-22	R5711528
Volatile Dustfall	0.10		0.10	mg/dm2.day		26-JAN-22	R5711528
Volatile Insoluble Dustfall	<0.10		0.10	mg/dm2.day		26-JAN-22	R5711528
Volatile Soluble Dustfall	0.10		0.10	mg/dm2.day		26-JAN-22	R5711528
Interval			1	days		27-JAN-22	R5709251
Mercury (Hg)-Total	<0.00000085		0.00000085	mg/dm2.day	27-JAN-22	27-JAN-22	R5710401
Total Metals in Dustfalls by ICPMS							
Aluminum (Al)-Total	0.0158		0.000051	mg/dm2.day	27-JAN-22	28-JAN-22	R5711423
Interval			1	days		27-JAN-22	R5710522
Antimony (Sb)-Total	0.0000020		0.0000017	mg/dm2.day	27-JAN-22	28-JAN-22	R5711423
Arsenic (As)-Total	0.0000338		0.0000017	mg/dm2.day	27-JAN-22	28-JAN-22	R5711423
Barium (Ba)-Total	0.0000750		0.00000085	mg/dm2.day	27-JAN-22	28-JAN-22	R5711423
Beryllium (Be)-Total	<0.0000085		0.0000085	mg/dm2.day	27-JAN-22	28-JAN-22	R5711423
Bismuth (Bi)-Total	<0.0000085		0.0000085	mg/dm2.day	27-JAN-22	28-JAN-22	R5711423
Boron (B)-Total	<0.00017		0.00017	mg/dm2.day	27-JAN-22	28-JAN-22	R5711423
Cadmium (Cd)-Total	0.00000128		0.00000085	mg/dm2.day	27-JAN-22	28-JAN-22	R5711423
Calcium (Ca)-Total	0.0225		0.00034	mg/dm2.day	27-JAN-22	28-JAN-22	R5711423
Chromium (Cr)-Total	0.0000139		0.0000085	mg/dm2.day	27-JAN-22	28-JAN-22	R5711423
Cobalt (Co)-Total	0.0000035		0.0000017	mg/dm2.day	27-JAN-22	28-JAN-22	R5711423
Copper (Cu)-Total	0.000157		0.0000085	mg/dm2.day	27-JAN-22	28-JAN-22	R5711423
Lead (Pb)-Total	0.0000256		0.00000085	mg/dm2.day	27-JAN-22	28-JAN-22	R5711423
Iron (Fe)-Total	0.0123		0.00051	mg/dm2.day	27-JAN-22	28-JAN-22	R5711423
Lithium (Li)-Total	<0.000085		0.000085	mg/dm2.day	27-JAN-22	28-JAN-22	R5711423
Magnesium (Mg)-Total	0.00692		0.000085	mg/dm2.day	27-JAN-22	28-JAN-22	R5711423
Manganese (Mn)-Total	0.000427		0.0000017	mg/dm2.day	27-JAN-22	28-JAN-22	R5711423
Molybdenum (Mo)-Total	<0.00000085		0.00000085	mg/dm2.day	27-JAN-22	28-JAN-22	R5711423
Nickel (Ni)-Total	0.0000229		0.0000085	mg/dm2.day	27-JAN-22	28-JAN-22	R5711423
Phosphorus (P)-Total	<0.00085		0.00085	mg/dm2.day	27-JAN-22	28-JAN-22	R5711423
Potassium (K)-Total	0.00365		0.00085	mg/dm2.day	27-JAN-22	28-JAN-22	R5711423
Selenium (Se)-Total	<0.000017		0.000017	mg/dm2.day	27-JAN-22	28-JAN-22	R5711423
Silicon (Si)-Total	0.0218		0.00085	mg/dm2.day	27-JAN-22	28-JAN-22	R5711423
Silver (Ag)-Total	0.00000089		0.00000017	mg/dm2.day	27-JAN-22	28-JAN-22	R5711423
Sodium (Na)-Total	0.00253		0.00085	mg/dm2.day	27-JAN-22	28-JAN-22	R5711423
Strontium (Sr)-Total	0.0000658		0.0000017	mg/dm2.day	27-JAN-22	28-JAN-22	R5711423
Thallium (Tl)-Total	<0.0000017		0.0000017	mg/dm2.day	27-JAN-22	28-JAN-22	R5711423
Tin (Sn)-Total	0.0000021		0.0000017	mg/dm2.day	27-JAN-22	28-JAN-22	R5711423
Titanium (Ti)-Total	0.00030		0.00017	mg/dm2.day	27-JAN-22	28-JAN-22	R5711423
Uranium (U)-Total	0.00000029		0.00000017	mg/dm2.day	27-JAN-22	28-JAN-22	R5711423
Vanadium (V)-Total	0.000025		0.000017	mg/dm2.day	27-JAN-22	28-JAN-22	R5711423
Zinc (Zn)-Total	0.000341		0.000051	mg/dm2.day	27-JAN-22	28-JAN-22	R5711423

* Refer to Referenced Information for Qualifiers (if any) and Methodology.

ALS ENVIRONMENTAL ANALYTICAL REPORT

Sample Details/Parameters	Result	Qualifier*	D.L.	Units	Extracted	Analyzed	Batch
L2677874-35 WCP1-DUSTFALL-12							
Sampled By: Client on 31-DEC-21							
Matrix: Dustfall							
Dustfalls-Total, Soluble, Insoluble +FV							
Total Dustfall	1.12		0.10	mg/dm2.day		26-JAN-22	R5711528
Total Insoluble Dustfall	1.02		0.10	mg/dm2.day		26-JAN-22	R5711528
Total Soluble Dustfall	<0.10		0.10	mg/dm2.day		26-JAN-22	R5711528
Fixed Dustfall	1.04		0.10	mg/dm2.day		26-JAN-22	R5711528
Fixed Insoluble Dustfall	0.99		0.10	mg/dm2.day		26-JAN-22	R5711528
Fixed Soluble Dustfall	<0.10		0.10	mg/dm2.day		26-JAN-22	R5711528
Volatile Dustfall	<0.10		0.10	mg/dm2.day		26-JAN-22	R5711528
Volatile Insoluble Dustfall	<0.10		0.10	mg/dm2.day		26-JAN-22	R5711528
Volatile Soluble Dustfall	<0.10		0.10	mg/dm2.day		26-JAN-22	R5711528
Interval			1	days		27-JAN-22	R5709251
Mercury (Hg)-Total	<0.00000087		0.00000087	mg/dm2.day	27-JAN-22	27-JAN-22	R5710401
Total Metals in Dustfalls by ICPMS							
Aluminum (Al)-Total	0.0209		0.000052	mg/dm2.day	27-JAN-22	28-JAN-22	R5711423
Interval			1	days		27-JAN-22	R5710522
Antimony (Sb)-Total	<0.0000017		0.0000017	mg/dm2.day	27-JAN-22	28-JAN-22	R5711423
Arsenic (As)-Total	0.0000418		0.0000017	mg/dm2.day	27-JAN-22	28-JAN-22	R5711423
Barium (Ba)-Total	0.0000886		0.0000008 7	mg/dm2.day	27-JAN-22	28-JAN-22	R5711423
Beryllium (Be)-Total	<0.0000087		0.0000087	mg/dm2.day	27-JAN-22	28-JAN-22	R5711423
Bismuth (Bi)-Total	0.0000209		0.0000087	mg/dm2.day	27-JAN-22	28-JAN-22	R5711423
Boron (B)-Total	<0.00017		0.00017	mg/dm2.day	27-JAN-22	28-JAN-22	R5711423
Cadmium (Cd)-Total	0.00000155		0.0000008 7	mg/dm2.day	27-JAN-22	28-JAN-22	R5711423
Calcium (Ca)-Total	0.0270		0.00035	mg/dm2.day	27-JAN-22	28-JAN-22	R5711423
Chromium (Cr)-Total	0.0000215		0.0000087	mg/dm2.day	27-JAN-22	28-JAN-22	R5711423
Cobalt (Co)-Total	0.0000053		0.0000017	mg/dm2.day	27-JAN-22	28-JAN-22	R5711423
Copper (Cu)-Total	0.000164		0.0000087	mg/dm2.day	27-JAN-22	28-JAN-22	R5711423
Lead (Pb)-Total	0.0000282		0.0000008 7	mg/dm2.day	27-JAN-22	28-JAN-22	R5711423
Iron (Fe)-Total	0.0174		0.00052	mg/dm2.day	27-JAN-22	28-JAN-22	R5711423
Lithium (Li)-Total	<0.000087		0.000087	mg/dm2.day	27-JAN-22	28-JAN-22	R5711423
Magnesium (Mg)-Total	0.00984		0.000087	mg/dm2.day	27-JAN-22	28-JAN-22	R5711423
Manganese (Mn)-Total	0.000521		0.0000017	mg/dm2.day	27-JAN-22	28-JAN-22	R5711423
Molybdenum (Mo)-Total	0.00000148		0.0000008 7	mg/dm2.day	27-JAN-22	28-JAN-22	R5711423
Nickel (Ni)-Total	0.0000278		0.0000087	mg/dm2.day	27-JAN-22	28-JAN-22	R5711423
Phosphorus (P)-Total	<0.00087		0.00087	mg/dm2.day	27-JAN-22	28-JAN-22	R5711423
Potassium (K)-Total	0.00471		0.00087	mg/dm2.day	27-JAN-22	28-JAN-22	R5711423
Selenium (Se)-Total	<0.000017		0.000017	mg/dm2.day	27-JAN-22	28-JAN-22	R5711423
Silicon (Si)-Total	0.0274		0.00087	mg/dm2.day	27-JAN-22	28-JAN-22	R5711423
Silver (Ag)-Total	0.00000248		0.0000001 7	mg/dm2.day	27-JAN-22	28-JAN-22	R5711423
Sodium (Na)-Total	0.00291		0.00087	mg/dm2.day	27-JAN-22	28-JAN-22	R5711423
Strontium (Sr)-Total	0.0000784		0.0000017	mg/dm2.day	27-JAN-22	28-JAN-22	R5711423
Thallium (Tl)-Total	<0.0000017		0.0000017	mg/dm2.day	27-JAN-22	28-JAN-22	R5711423
Tin (Sn)-Total	<0.0000017		0.0000017	mg/dm2.day	27-JAN-22	28-JAN-22	R5711423
Titanium (Ti)-Total	0.00030		0.00017	mg/dm2.day	27-JAN-22	28-JAN-22	R5711423
Uranium (U)-Total	0.00000031		0.0000001 7	mg/dm2.day	27-JAN-22	28-JAN-22	R5711423
Vanadium (V)-Total	0.000031		0.000017	mg/dm2.day	27-JAN-22	28-JAN-22	R5711423
Zinc (Zn)-Total	0.000442		0.000052	mg/dm2.day	27-JAN-22	28-JAN-22	R5711423

* Refer to Referenced Information for Qualifiers (if any) and Methodology.

ALS ENVIRONMENTAL ANALYTICAL REPORT

Sample Details/Parameters	Result	Qualifier*	D.L.	Units	Extracted	Analyzed	Batch
L2677874-36 GH1-DUSTFALL-12							
Sampled By: Client on 31-DEC-21							
Matrix: Dustfall							
Dustfalls-Total, Soluble, Insoluble +FV							
Total Dustfall	0.54		0.10	mg/dm2.day		26-JAN-22	R5711528
Total Insoluble Dustfall	0.50		0.10	mg/dm2.day		26-JAN-22	R5711528
Total Soluble Dustfall	<0.10		0.10	mg/dm2.day		26-JAN-22	R5711528
Fixed Dustfall	0.52		0.10	mg/dm2.day		26-JAN-22	R5711528
Fixed Insoluble Dustfall	0.49		0.10	mg/dm2.day		26-JAN-22	R5711528
Fixed Soluble Dustfall	<0.10		0.10	mg/dm2.day		26-JAN-22	R5711528
Volatile Dustfall	<0.10		0.10	mg/dm2.day		26-JAN-22	R5711528
Volatile Insoluble Dustfall	<0.10		0.10	mg/dm2.day		26-JAN-22	R5711528
Volatile Soluble Dustfall	<0.10		0.10	mg/dm2.day		26-JAN-22	R5711528
Interval			1	days		27-JAN-22	R5709251
Mercury (Hg)-Total	<0.00000072		0.00000072	mg/dm2.day	27-JAN-22	27-JAN-22	R5710401
Total Metals in Dustfalls by ICPMS							
Aluminum (Al)-Total	0.0125		0.000043	mg/dm2.day	27-JAN-22	28-JAN-22	R5711423
Interval			1	days		27-JAN-22	R5710522
Antimony (Sb)-Total	<0.0000014		0.0000014	mg/dm2.day	27-JAN-22	28-JAN-22	R5711423
Arsenic (As)-Total	0.0000407		0.0000014	mg/dm2.day	27-JAN-22	28-JAN-22	R5711423
Barium (Ba)-Total	0.0000591		0.00000072	mg/dm2.day	27-JAN-22	28-JAN-22	R5711423
Beryllium (Be)-Total	<0.0000072		0.0000072	mg/dm2.day	27-JAN-22	28-JAN-22	R5711423
Bismuth (Bi)-Total	<0.0000072		0.0000072	mg/dm2.day	27-JAN-22	28-JAN-22	R5711423
Boron (B)-Total	<0.00014		0.00014	mg/dm2.day	27-JAN-22	28-JAN-22	R5711423
Cadmium (Cd)-Total	0.00000116		0.00000072	mg/dm2.day	27-JAN-22	28-JAN-22	R5711423
Calcium (Ca)-Total	0.0150		0.00029	mg/dm2.day	27-JAN-22	28-JAN-22	R5711423
Chromium (Cr)-Total	0.0000180		0.0000072	mg/dm2.day	27-JAN-22	28-JAN-22	R5711423
Cobalt (Co)-Total	0.0000036		0.0000014	mg/dm2.day	27-JAN-22	28-JAN-22	R5711423
Copper (Cu)-Total	0.0000899		0.0000072	mg/dm2.day	27-JAN-22	28-JAN-22	R5711423
Lead (Pb)-Total	0.0000227		0.00000072	mg/dm2.day	27-JAN-22	28-JAN-22	R5711423
Iron (Fe)-Total	0.0112		0.00043	mg/dm2.day	27-JAN-22	28-JAN-22	R5711423
Lithium (Li)-Total	<0.000072		0.000072	mg/dm2.day	27-JAN-22	28-JAN-22	R5711423
Magnesium (Mg)-Total	0.00596		0.000072	mg/dm2.day	27-JAN-22	28-JAN-22	R5711423
Manganese (Mn)-Total	0.000338		0.0000014	mg/dm2.day	27-JAN-22	28-JAN-22	R5711423
Molybdenum (Mo)-Total	0.00000131		0.00000072	mg/dm2.day	27-JAN-22	28-JAN-22	R5711423
Nickel (Ni)-Total	0.0000170		0.0000072	mg/dm2.day	27-JAN-22	28-JAN-22	R5711423
Phosphorus (P)-Total	<0.00072		0.00072	mg/dm2.day	27-JAN-22	28-JAN-22	R5711423
Potassium (K)-Total	0.00315		0.00072	mg/dm2.day	27-JAN-22	28-JAN-22	R5711423
Selenium (Se)-Total	<0.000014		0.000014	mg/dm2.day	27-JAN-22	28-JAN-22	R5711423
Silicon (Si)-Total	0.0177		0.00072	mg/dm2.day	27-JAN-22	28-JAN-22	R5711423
Silver (Ag)-Total	0.00000046		0.00000014	mg/dm2.day	27-JAN-22	28-JAN-22	R5711423
Sodium (Na)-Total	0.00223		0.00072	mg/dm2.day	27-JAN-22	28-JAN-22	R5711423
Strontium (Sr)-Total	0.0000483		0.0000014	mg/dm2.day	27-JAN-22	28-JAN-22	R5711423
Thallium (Tl)-Total	<0.0000014		0.0000014	mg/dm2.day	27-JAN-22	28-JAN-22	R5711423
Tin (Sn)-Total	<0.0000014		0.0000014	mg/dm2.day	27-JAN-22	28-JAN-22	R5711423
Titanium (Ti)-Total	0.00022		0.00014	mg/dm2.day	27-JAN-22	28-JAN-22	R5711423
Uranium (U)-Total	0.00000019		0.00000014	mg/dm2.day	27-JAN-22	28-JAN-22	R5711423
Vanadium (V)-Total	0.000022		0.000014	mg/dm2.day	27-JAN-22	28-JAN-22	R5711423
Zinc (Zn)-Total	0.000277		0.000043	mg/dm2.day	27-JAN-22	28-JAN-22	R5711423

* Refer to Referenced Information for Qualifiers (if any) and Methodology.

ALS ENVIRONMENTAL ANALYTICAL REPORT

Sample Details/Parameters	Result	Qualifier*	D.L.	Units	Extracted	Analyzed	Batch
L2677874-37 SPP1-DUSTFALL-50							
Sampled By: Client on 08-DEC-21							
Matrix: Dustfall							
Dustfalls-Total, Soluble, Insoluble +FV							
Total Dustfall	66.2		0.43	mg/dm2.day		26-JAN-22	R5711528
Total Insoluble Dustfall	63.3		0.43	mg/dm2.day		26-JAN-22	R5711528
Total Soluble Dustfall	3.00		0.43	mg/dm2.day		26-JAN-22	R5711528
Fixed Dustfall	61.6		0.43	mg/dm2.day		26-JAN-22	R5711528
Fixed Insoluble Dustfall	59.6		0.43	mg/dm2.day		26-JAN-22	R5711528
Fixed Soluble Dustfall	2.00		0.43	mg/dm2.day		26-JAN-22	R5711528
Volatile Dustfall	4.63		0.43	mg/dm2.day		26-JAN-22	R5711528
Volatile Insoluble Dustfall	3.63		0.43	mg/dm2.day		26-JAN-22	R5711528
Volatile Soluble Dustfall	0.99		0.43	mg/dm2.day		26-JAN-22	R5711528
Interval			1	days		27-JAN-22	R5709251
Mercury (Hg)-Total	<0.0000040	DLM	0.0000040	mg/dm2.day	27-JAN-22	27-JAN-22	R5710401
Total Metals in Dustfalls by ICPMS							
Aluminum (Al)-Total	0.778		0.00024	mg/dm2.day	27-JAN-22	28-JAN-22	R5711423
Interval			1	days		27-JAN-22	R5710522
Antimony (Sb)-Total	0.0000239		0.0000080	mg/dm2.day	27-JAN-22	28-JAN-22	R5711423
Arsenic (As)-Total	0.000763		0.0000080	mg/dm2.day	27-JAN-22	28-JAN-22	R5711423
Barium (Ba)-Total	0.00576		0.0000040	mg/dm2.day	27-JAN-22	28-JAN-22	R5711423
Beryllium (Be)-Total	<0.000040		0.000040	mg/dm2.day	27-JAN-22	28-JAN-22	R5711423
Bismuth (Bi)-Total	<0.000040		0.000040	mg/dm2.day	27-JAN-22	28-JAN-22	R5711423
Boron (B)-Total	0.00095		0.00080	mg/dm2.day	27-JAN-22	28-JAN-22	R5711423
Cadmium (Cd)-Total	0.0000749		0.0000040	mg/dm2.day	27-JAN-22	28-JAN-22	R5711423
Calcium (Ca)-Total	2.16		0.0016	mg/dm2.day	27-JAN-22	28-JAN-22	R5711423
Chromium (Cr)-Total	0.00131		0.000040	mg/dm2.day	27-JAN-22	28-JAN-22	R5711423
Cobalt (Co)-Total	0.000344		0.0000080	mg/dm2.day	27-JAN-22	28-JAN-22	R5711423
Copper (Cu)-Total	0.00213		0.000040	mg/dm2.day	27-JAN-22	28-JAN-22	R5711423
Lead (Pb)-Total	0.00134		0.0000040	mg/dm2.day	27-JAN-22	28-JAN-22	R5711423
Iron (Fe)-Total	0.808		0.0024	mg/dm2.day	27-JAN-22	28-JAN-22	R5711423
Lithium (Li)-Total	0.00093		0.00040	mg/dm2.day	27-JAN-22	28-JAN-22	R5711423
Magnesium (Mg)-Total	0.857		0.00040	mg/dm2.day	27-JAN-22	28-JAN-22	R5711423
Manganese (Mn)-Total	0.0181		0.0000080	mg/dm2.day	27-JAN-22	28-JAN-22	R5711423
Molybdenum (Mo)-Total	0.0000650		0.0000040	mg/dm2.day	27-JAN-22	28-JAN-22	R5711423
Nickel (Ni)-Total	0.00124		0.000040	mg/dm2.day	27-JAN-22	28-JAN-22	R5711423
Phosphorus (P)-Total	0.0240		0.0040	mg/dm2.day	27-JAN-22	28-JAN-22	R5711423
Potassium (K)-Total	0.205		0.0040	mg/dm2.day	27-JAN-22	28-JAN-22	R5711423
Selenium (Se)-Total	<0.000080		0.000080	mg/dm2.day	27-JAN-22	28-JAN-22	R5711423
Silicon (Si)-Total	1.51		0.0040	mg/dm2.day	27-JAN-22	28-JAN-22	R5711423
Silver (Ag)-Total	0.0000516		0.00000080	mg/dm2.day	27-JAN-22	28-JAN-22	R5711423
Sodium (Na)-Total	0.0476		0.0040	mg/dm2.day	27-JAN-22	28-JAN-22	R5711423
Strontium (Sr)-Total	0.00290		0.0000080	mg/dm2.day	27-JAN-22	28-JAN-22	R5711423
Thallium (Tl)-Total	0.0000104		0.0000080	mg/dm2.day	27-JAN-22	28-JAN-22	R5711423
Tin (Sn)-Total	0.0000244		0.0000080	mg/dm2.day	27-JAN-22	28-JAN-22	R5711423
Titanium (Ti)-Total	0.0193		0.00080	mg/dm2.day	27-JAN-22	28-JAN-22	R5711423
Uranium (U)-Total	0.0000691		0.00000080	mg/dm2.day	27-JAN-22	28-JAN-22	R5711423
Vanadium (V)-Total	0.00228		0.000080	mg/dm2.day	27-JAN-22	28-JAN-22	R5711423
Zinc (Zn)-Total	0.0170		0.00024	mg/dm2.day	27-JAN-22	28-JAN-22	R5711423
L2677874-38 SPP1-DUSTFALL-51							
Sampled By: Client on 15-DEC-21							
Matrix: Dustfall							

* Refer to Referenced Information for Qualifiers (if any) and Methodology.

ALS ENVIRONMENTAL ANALYTICAL REPORT

Sample Details/Parameters	Result	Qualifier*	D.L.	Units	Extracted	Analyzed	Batch
L2677874-38 SPP1-DUSTFALL-51							
Sampled By: Client on 15-DEC-21							
Matrix: Dustfall							
Dustfalls-Total, Soluble, Insoluble +FV							
Total Dustfall	9.55		0.43	mg/dm2.day		26-JAN-22	R5711528
Total Insoluble Dustfall	8.59		0.43	mg/dm2.day		26-JAN-22	R5711528
Total Soluble Dustfall	0.96		0.43	mg/dm2.day		26-JAN-22	R5711528
Fixed Dustfall	8.43		0.43	mg/dm2.day		26-JAN-22	R5711528
Fixed Insoluble Dustfall	8.43		0.43	mg/dm2.day		26-JAN-22	R5711528
Fixed Soluble Dustfall	<0.43		0.43	mg/dm2.day		26-JAN-22	R5711528
Volatile Dustfall	1.12		0.43	mg/dm2.day		26-JAN-22	R5711528
Volatile Insoluble Dustfall	<0.43		0.43	mg/dm2.day		26-JAN-22	R5711528
Volatile Soluble Dustfall	0.96		0.43	mg/dm2.day		26-JAN-22	R5711528
Interval			1	days		27-JAN-22	R5709251
Mercury (Hg)-Total	<0.0000030		0.0000030	mg/dm2.day	27-JAN-22	27-JAN-22	R5710401
Total Metals in Dustfalls by ICPMS							
Aluminum (Al)-Total	0.139		0.00018	mg/dm2.day	27-JAN-22	28-JAN-22	R5711423
Interval			1	days		27-JAN-22	R5710522
Antimony (Sb)-Total	0.0000161		0.0000059	mg/dm2.day	27-JAN-22	28-JAN-22	R5711423
Arsenic (As)-Total	0.000323		0.0000059	mg/dm2.day	27-JAN-22	28-JAN-22	R5711423
Barium (Ba)-Total	0.000456		0.0000030	mg/dm2.day	27-JAN-22	28-JAN-22	R5711423
Beryllium (Be)-Total	<0.000030		0.000030	mg/dm2.day	27-JAN-22	28-JAN-22	R5711423
Bismuth (Bi)-Total	<0.000030		0.000030	mg/dm2.day	27-JAN-22	28-JAN-22	R5711423
Boron (B)-Total	<0.00059		0.00059	mg/dm2.day	27-JAN-22	28-JAN-22	R5711423
Cadmium (Cd)-Total	0.0000295		0.0000030	mg/dm2.day	27-JAN-22	28-JAN-22	R5711423
Calcium (Ca)-Total	0.155		0.0012	mg/dm2.day	27-JAN-22	28-JAN-22	R5711423
Chromium (Cr)-Total	0.000091		0.000030	mg/dm2.day	27-JAN-22	28-JAN-22	R5711423
Cobalt (Co)-Total	0.0000316		0.0000059	mg/dm2.day	27-JAN-22	28-JAN-22	R5711423
Copper (Cu)-Total	0.00109		0.000030	mg/dm2.day	27-JAN-22	28-JAN-22	R5711423
Lead (Pb)-Total	0.000236		0.0000030	mg/dm2.day	27-JAN-22	28-JAN-22	R5711423
Iron (Fe)-Total	0.149		0.0018	mg/dm2.day	27-JAN-22	28-JAN-22	R5711423
Lithium (Li)-Total	<0.00030		0.00030	mg/dm2.day	27-JAN-22	28-JAN-22	R5711423
Magnesium (Mg)-Total	0.0710		0.00030	mg/dm2.day	27-JAN-22	28-JAN-22	R5711423
Manganese (Mn)-Total	0.00510		0.0000059	mg/dm2.day	27-JAN-22	28-JAN-22	R5711423
Molybdenum (Mo)-Total	0.0000060		0.0000030	mg/dm2.day	27-JAN-22	28-JAN-22	R5711423
Nickel (Ni)-Total	0.000084		0.000030	mg/dm2.day	27-JAN-22	28-JAN-22	R5711423
Phosphorus (P)-Total	0.0034		0.0030	mg/dm2.day	27-JAN-22	28-JAN-22	R5711423
Potassium (K)-Total	0.0295		0.0030	mg/dm2.day	27-JAN-22	28-JAN-22	R5711423
Selenium (Se)-Total	<0.000059		0.000059	mg/dm2.day	27-JAN-22	28-JAN-22	R5711423
Silicon (Si)-Total	0.163		0.0030	mg/dm2.day	27-JAN-22	28-JAN-22	R5711423
Silver (Ag)-Total	0.00000674		0.00000059	mg/dm2.day	27-JAN-22	28-JAN-22	R5711423
Sodium (Na)-Total	0.0088		0.0030	mg/dm2.day	27-JAN-22	28-JAN-22	R5711423
Strontium (Sr)-Total	0.000388		0.0000059	mg/dm2.day	27-JAN-22	28-JAN-22	R5711423
Thallium (Tl)-Total	<0.0000059		0.0000059	mg/dm2.day	27-JAN-22	28-JAN-22	R5711423
Tin (Sn)-Total	<0.0000059		0.0000059	mg/dm2.day	27-JAN-22	28-JAN-22	R5711423
Titanium (Ti)-Total	0.00166		0.00059	mg/dm2.day	27-JAN-22	28-JAN-22	R5711423
Uranium (U)-Total	0.00000185		0.00000059	mg/dm2.day	27-JAN-22	28-JAN-22	R5711423
Vanadium (V)-Total	0.000156		0.000059	mg/dm2.day	27-JAN-22	28-JAN-22	R5711423
Zinc (Zn)-Total	0.00687		0.00018	mg/dm2.day	27-JAN-22	28-JAN-22	R5711423
L2677874-39 SPP1-DUSTFALL-52							
Sampled By: Client on 22-DEC-21							
Matrix: Dustfall							
Dustfalls-Total, Soluble, Insoluble +FV							

* Refer to Referenced Information for Qualifiers (if any) and Methodology.

ALS ENVIRONMENTAL ANALYTICAL REPORT

Sample Details/Parameters	Result	Qualifier*	D.L.	Units	Extracted	Analyzed	Batch
L2677874-39 SPP1-DUSTFALL-52							
Sampled By: Client on 22-DEC-21							
Matrix: Dustfall							
Dustfalls-Total, Soluble, Insoluble +FV							
Total Dustfall	8.66		0.43	mg/dm2.day		26-JAN-22	R5711528
Total Insoluble Dustfall	6.20		0.43	mg/dm2.day		26-JAN-22	R5711528
Total Soluble Dustfall	2.46		0.43	mg/dm2.day		26-JAN-22	R5711528
Fixed Dustfall	6.25		0.43	mg/dm2.day		26-JAN-22	R5711528
Fixed Insoluble Dustfall	6.00		0.43	mg/dm2.day		26-JAN-22	R5711528
Fixed Soluble Dustfall	<0.43		0.43	mg/dm2.day		26-JAN-22	R5711528
Volatile Dustfall	2.40		0.43	mg/dm2.day		26-JAN-22	R5711528
Volatile Insoluble Dustfall	<0.43		0.43	mg/dm2.day		26-JAN-22	R5711528
Volatile Soluble Dustfall	2.21		0.43	mg/dm2.day		26-JAN-22	R5711528
Interval			1	days		27-JAN-22	R5709251
Mercury (Hg)-Total	<0.0000066		0.0000066	mg/dm2.day	27-JAN-22	27-JAN-22	R5710401
Total Metals in Dustfalls by ICPMS							
Aluminum (Al)-Total	0.142		0.00039	mg/dm2.day	27-JAN-22	28-JAN-22	R5711423
Interval			1	days		27-JAN-22	R5710522
Antimony (Sb)-Total	<0.000013		0.000013	mg/dm2.day	27-JAN-22	28-JAN-22	R5711423
Arsenic (As)-Total	0.000042		0.000013	mg/dm2.day	27-JAN-22	28-JAN-22	R5711423
Barium (Ba)-Total	0.000483		0.0000066	mg/dm2.day	27-JAN-22	28-JAN-22	R5711423
Beryllium (Be)-Total	<0.000066		0.000066	mg/dm2.day	27-JAN-22	28-JAN-22	R5711423
Bismuth (Bi)-Total	<0.000066		0.000066	mg/dm2.day	27-JAN-22	28-JAN-22	R5711423
Boron (B)-Total	<0.0013		0.0013	mg/dm2.day	27-JAN-22	28-JAN-22	R5711423
Cadmium (Cd)-Total	<0.0000066		0.0000066	mg/dm2.day	27-JAN-22	28-JAN-22	R5711423
Calcium (Ca)-Total	0.139		0.0026	mg/dm2.day	27-JAN-22	28-JAN-22	R5711423
Chromium (Cr)-Total	0.000073		0.000066	mg/dm2.day	27-JAN-22	28-JAN-22	R5711423
Cobalt (Co)-Total	0.000017		0.000013	mg/dm2.day	27-JAN-22	28-JAN-22	R5711423
Copper (Cu)-Total	0.00233		0.000066	mg/dm2.day	27-JAN-22	28-JAN-22	R5711423
Lead (Pb)-Total	0.0000501		0.0000066	mg/dm2.day	27-JAN-22	28-JAN-22	R5711423
Iron (Fe)-Total	0.130		0.0039	mg/dm2.day	27-JAN-22	28-JAN-22	R5711423
Lithium (Li)-Total	<0.00066		0.00066	mg/dm2.day	27-JAN-22	28-JAN-22	R5711423
Magnesium (Mg)-Total	0.0650		0.00066	mg/dm2.day	27-JAN-22	28-JAN-22	R5711423
Manganese (Mn)-Total	0.00299		0.000013	mg/dm2.day	27-JAN-22	28-JAN-22	R5711423
Molybdenum (Mo)-Total	<0.0000066		0.0000066	mg/dm2.day	27-JAN-22	28-JAN-22	R5711423
Nickel (Ni)-Total	0.000083		0.000066	mg/dm2.day	27-JAN-22	28-JAN-22	R5711423
Phosphorus (P)-Total	<0.0066		0.0066	mg/dm2.day	27-JAN-22	28-JAN-22	R5711423
Potassium (K)-Total	0.0214		0.0066	mg/dm2.day	27-JAN-22	28-JAN-22	R5711423
Selenium (Se)-Total	<0.00013		0.00013	mg/dm2.day	27-JAN-22	28-JAN-22	R5711423
Silicon (Si)-Total	0.156		0.0066	mg/dm2.day	27-JAN-22	28-JAN-22	R5711423
Silver (Ag)-Total	0.000115		0.0000013	mg/dm2.day	27-JAN-22	28-JAN-22	R5711423
Sodium (Na)-Total	0.0142		0.0066	mg/dm2.day	27-JAN-22	28-JAN-22	R5711423
Strontium (Sr)-Total	0.000513		0.000013	mg/dm2.day	27-JAN-22	28-JAN-22	R5711423
Thallium (Tl)-Total	<0.000013		0.000013	mg/dm2.day	27-JAN-22	28-JAN-22	R5711423
Tin (Sn)-Total	<0.000013		0.000013	mg/dm2.day	27-JAN-22	28-JAN-22	R5711423
Titanium (Ti)-Total	0.0018		0.0013	mg/dm2.day	27-JAN-22	28-JAN-22	R5711423
Uranium (U)-Total	0.0000016		0.0000013	mg/dm2.day	27-JAN-22	28-JAN-22	R5711423
Vanadium (V)-Total	0.00023		0.00013	mg/dm2.day	27-JAN-22	28-JAN-22	R5711423
Zinc (Zn)-Total	0.00130		0.00039	mg/dm2.day	27-JAN-22	28-JAN-22	R5711423
L2677874-40 SPP1-DUSTFALL-53							
Sampled By: Client on 29-DEC-21							
Matrix: Dustfall							
Dustfalls-Total, Soluble, Insoluble +FV							
Total Dustfall	1.86		0.43	mg/dm2.day		26-JAN-22	R5711528

* Refer to Referenced Information for Qualifiers (if any) and Methodology.

ALS ENVIRONMENTAL ANALYTICAL REPORT

Sample Details/Parameters	Result	Qualifier*	D.L.	Units	Extracted	Analyzed	Batch
L2677874-40 SPP1-DUSTFALL-53							
Sampled By: Client on 29-DEC-21							
Matrix: Dustfall							
Dustfalls-Total, Soluble, Insoluble +FV							
Total Insoluble Dustfall	1.70		0.43	mg/dm2.day		26-JAN-22	R5711528
Total Soluble Dustfall	<0.43		0.43	mg/dm2.day		26-JAN-22	R5711528
Fixed Dustfall	1.82		0.43	mg/dm2.day		26-JAN-22	R5711528
Fixed Insoluble Dustfall	1.73		0.43	mg/dm2.day		26-JAN-22	R5711528
Fixed Soluble Dustfall	<0.43		0.43	mg/dm2.day		26-JAN-22	R5711528
Volatile Dustfall	<0.43		0.43	mg/dm2.day		26-JAN-22	R5711528
Volatile Insoluble Dustfall	<0.43		0.43	mg/dm2.day		26-JAN-22	R5711528
Volatile Soluble Dustfall	<0.43		0.43	mg/dm2.day		26-JAN-22	R5711528
Interval			1	days		27-JAN-22	R5709251
Mercury (Hg)-Total	<0.0000050	DLM	0.0000050	mg/dm2.day	27-JAN-22	27-JAN-22	R5710401
Total Metals in Dustfalls by ICPMS							
Aluminum (Al)-Total	0.0367		0.00030	mg/dm2.day	27-JAN-22	28-JAN-22	R5711423
Interval			1	days		27-JAN-22	R5710522
Antimony (Sb)-Total	<0.000010		0.000010	mg/dm2.day	27-JAN-22	28-JAN-22	R5711423
Arsenic (As)-Total	0.000030		0.000010	mg/dm2.day	27-JAN-22	28-JAN-22	R5711423
Barium (Ba)-Total	0.000161		0.0000050	mg/dm2.day	27-JAN-22	28-JAN-22	R5711423
Beryllium (Be)-Total	<0.000050		0.000050	mg/dm2.day	27-JAN-22	28-JAN-22	R5711423
Bismuth (Bi)-Total	<0.000050		0.000050	mg/dm2.day	27-JAN-22	28-JAN-22	R5711423
Boron (B)-Total	<0.0010		0.0010	mg/dm2.day	27-JAN-22	28-JAN-22	R5711423
Cadmium (Cd)-Total	<0.0000050		0.0000050	mg/dm2.day	27-JAN-22	28-JAN-22	R5711423
Calcium (Ca)-Total	0.0355		0.0020	mg/dm2.day	27-JAN-22	28-JAN-22	R5711423
Chromium (Cr)-Total	<0.000050		0.000050	mg/dm2.day	27-JAN-22	28-JAN-22	R5711423
Cobalt (Co)-Total	<0.000010		0.000010	mg/dm2.day	27-JAN-22	28-JAN-22	R5711423
Copper (Cu)-Total	0.000325		0.000050	mg/dm2.day	27-JAN-22	28-JAN-22	R5711423
Lead (Pb)-Total	0.0000232		0.0000050	mg/dm2.day	27-JAN-22	28-JAN-22	R5711423
Iron (Fe)-Total	0.0292		0.0030	mg/dm2.day	27-JAN-22	28-JAN-22	R5711423
Lithium (Li)-Total	<0.00050		0.00050	mg/dm2.day	27-JAN-22	28-JAN-22	R5711423
Magnesium (Mg)-Total	0.0123		0.00050	mg/dm2.day	27-JAN-22	28-JAN-22	R5711423
Manganese (Mn)-Total	0.000684		0.000010	mg/dm2.day	27-JAN-22	28-JAN-22	R5711423
Molybdenum (Mo)-Total	<0.0000050		0.0000050	mg/dm2.day	27-JAN-22	28-JAN-22	R5711423
Nickel (Ni)-Total	<0.000050		0.000050	mg/dm2.day	27-JAN-22	28-JAN-22	R5711423
Phosphorus (P)-Total	<0.0050		0.0050	mg/dm2.day	27-JAN-22	28-JAN-22	R5711423
Potassium (K)-Total	0.0097		0.0050	mg/dm2.day	27-JAN-22	28-JAN-22	R5711423
Selenium (Se)-Total	<0.00010		0.00010	mg/dm2.day	27-JAN-22	28-JAN-22	R5711423
Silicon (Si)-Total	0.0465		0.0050	mg/dm2.day	27-JAN-22	28-JAN-22	R5711423
Silver (Ag)-Total	0.0000049		0.0000010	mg/dm2.day	27-JAN-22	28-JAN-22	R5711423
Sodium (Na)-Total	0.0059		0.0050	mg/dm2.day	27-JAN-22	28-JAN-22	R5711423
Strontium (Sr)-Total	0.000156		0.000010	mg/dm2.day	27-JAN-22	28-JAN-22	R5711423
Thallium (Tl)-Total	<0.000010		0.000010	mg/dm2.day	27-JAN-22	28-JAN-22	R5711423
Tin (Sn)-Total	<0.000010		0.000010	mg/dm2.day	27-JAN-22	28-JAN-22	R5711423
Titanium (Ti)-Total	<0.0010		0.0010	mg/dm2.day	27-JAN-22	28-JAN-22	R5711423
Uranium (U)-Total	<0.0000010		0.0000010	mg/dm2.day	27-JAN-22	28-JAN-22	R5711423
Vanadium (V)-Total	<0.00010		0.00010	mg/dm2.day	27-JAN-22	28-JAN-22	R5711423
Zinc (Zn)-Total	0.00044		0.00030	mg/dm2.day	27-JAN-22	28-JAN-22	R5711423
L2677874-41 SPP1-DUSTFALL-54							
Sampled By: Client on 05-JAN-22							
Matrix: Dustfall							
Dustfalls-Total, Soluble, Insoluble +FV							
Total Dustfall	7.76		0.43	mg/dm2.day		26-JAN-22	R5711528
Total Insoluble Dustfall	7.03		0.43	mg/dm2.day		26-JAN-22	R5711528

* Refer to Referenced Information for Qualifiers (if any) and Methodology.

ALS ENVIRONMENTAL ANALYTICAL REPORT

Sample Details/Parameters	Result	Qualifier*	D.L.	Units	Extracted	Analyzed	Batch
L2677874-41 SPP1-DUSTFALL-54							
Sampled By: Client on 05-JAN-22							
Matrix: Dustfall							
Dustfalls-Total, Soluble, Insoluble +FV							
Total Soluble Dustfall	0.73		0.43	mg/dm2.day		26-JAN-22	R5711528
Fixed Dustfall	7.19		0.43	mg/dm2.day		26-JAN-22	R5711528
Fixed Insoluble Dustfall	6.92		0.43	mg/dm2.day		26-JAN-22	R5711528
Fixed Soluble Dustfall	<0.43		0.43	mg/dm2.day		26-JAN-22	R5711528
Volatile Dustfall	0.56		0.43	mg/dm2.day		26-JAN-22	R5711528
Volatile Insoluble Dustfall	<0.43		0.43	mg/dm2.day		26-JAN-22	R5711528
Volatile Soluble Dustfall	0.46		0.43	mg/dm2.day		26-JAN-22	R5711528
Interval			1	days		27-JAN-22	R5709251
Mercury (Hg)-Total	<0.0000046		0.0000046	mg/dm2.day	27-JAN-22	27-JAN-22	R5710401
Total Metals in Dustfalls by ICPMS							
Aluminum (Al)-Total	0.107		0.00028	mg/dm2.day	27-JAN-22	28-JAN-22	R5711423
Interval			1	days		27-JAN-22	R5710522
Antimony (Sb)-Total	0.0000166		0.0000093	mg/dm2.day	27-JAN-22	28-JAN-22	R5711423
Arsenic (As)-Total	0.000366		0.0000093	mg/dm2.day	27-JAN-22	28-JAN-22	R5711423
Barium (Ba)-Total	0.000331		0.0000046	mg/dm2.day	27-JAN-22	28-JAN-22	R5711423
Beryllium (Be)-Total	<0.000046		0.000046	mg/dm2.day	27-JAN-22	28-JAN-22	R5711423
Bismuth (Bi)-Total	<0.000046		0.000046	mg/dm2.day	27-JAN-22	28-JAN-22	R5711423
Boron (B)-Total	<0.00093		0.00093	mg/dm2.day	27-JAN-22	28-JAN-22	R5711423
Cadmium (Cd)-Total	0.0000322		0.0000046	mg/dm2.day	27-JAN-22	28-JAN-22	R5711423
Calcium (Ca)-Total	0.141		0.0019	mg/dm2.day	27-JAN-22	28-JAN-22	R5711423
Chromium (Cr)-Total	0.000611		0.000046	mg/dm2.day	27-JAN-22	28-JAN-22	R5711423
Cobalt (Co)-Total	0.0000570		0.0000093	mg/dm2.day	27-JAN-22	28-JAN-22	R5711423
Copper (Cu)-Total	0.00259		0.000046	mg/dm2.day	27-JAN-22	28-JAN-22	R5711423
Lead (Pb)-Total	0.000425		0.0000046	mg/dm2.day	27-JAN-22	28-JAN-22	R5711423
Iron (Fe)-Total	0.137		0.0028	mg/dm2.day	27-JAN-22	28-JAN-22	R5711423
Lithium (Li)-Total	<0.00046		0.00046	mg/dm2.day	27-JAN-22	28-JAN-22	R5711423
Magnesium (Mg)-Total	0.0518		0.00046	mg/dm2.day	27-JAN-22	28-JAN-22	R5711423
Manganese (Mn)-Total	0.00393		0.0000093	mg/dm2.day	27-JAN-22	28-JAN-22	R5711423
Molybdenum (Mo)-Total	0.0000080		0.0000046	mg/dm2.day	27-JAN-22	28-JAN-22	R5711423
Nickel (Ni)-Total	0.00104		0.000046	mg/dm2.day	27-JAN-22	28-JAN-22	R5711423
Phosphorus (P)-Total	0.0050		0.0046	mg/dm2.day	27-JAN-22	28-JAN-22	R5711423
Potassium (K)-Total	0.0236		0.0046	mg/dm2.day	27-JAN-22	28-JAN-22	R5711423
Selenium (Se)-Total	<0.000093		0.000093	mg/dm2.day	27-JAN-22	28-JAN-22	R5711423
Silicon (Si)-Total	0.129		0.0046	mg/dm2.day	27-JAN-22	28-JAN-22	R5711423
Silver (Ag)-Total	0.0000238		0.00000093	mg/dm2.day	27-JAN-22	28-JAN-22	R5711423
Sodium (Na)-Total	0.0104		0.0046	mg/dm2.day	27-JAN-22	28-JAN-22	R5711423
Strontium (Sr)-Total	0.000387		0.0000093	mg/dm2.day	27-JAN-22	28-JAN-22	R5711423
Thallium (Tl)-Total	<0.0000093		0.0000093	mg/dm2.day	27-JAN-22	28-JAN-22	R5711423
Tin (Sn)-Total	<0.0000093		0.0000093	mg/dm2.day	27-JAN-22	28-JAN-22	R5711423
Titanium (Ti)-Total	0.00119		0.00093	mg/dm2.day	27-JAN-22	28-JAN-22	R5711423
Uranium (U)-Total	0.00000151		0.00000093	mg/dm2.day	27-JAN-22	28-JAN-22	R5711423
Vanadium (V)-Total	0.000152		0.000093	mg/dm2.day	27-JAN-22	28-JAN-22	R5711423
Zinc (Zn)-Total	0.00664		0.00028	mg/dm2.day	27-JAN-22	28-JAN-22	R5711423
L2677874-42 DUSTFALL-GALLINGER ROAD							
Sampled By: Client on 04-JAN-22							
Matrix: Dustfall							
Dustfalls-Total, Soluble, Insoluble +FV							
Total Dustfall	0.60		0.10	mg/dm2.day		26-JAN-22	R5711528
Total Insoluble Dustfall	0.52		0.10	mg/dm2.day		26-JAN-22	R5711528

* Refer to Referenced Information for Qualifiers (if any) and Methodology.

ALS ENVIRONMENTAL ANALYTICAL REPORT

Sample Details/Parameters	Result	Qualifier*	D.L.	Units	Extracted	Analyzed	Batch
L2677874-42 DUSTFALL-GALLINGER ROAD							
Sampled By: Client on 04-JAN-22							
Matrix: Dustfall							
Dustfalls-Total, Soluble, Insoluble +FV							
Total Soluble Dustfall	<0.10		0.10	mg/dm2.day		26-JAN-22	R5711528
Fixed Dustfall	0.50		0.10	mg/dm2.day		26-JAN-22	R5711528
Fixed Insoluble Dustfall	0.50		0.10	mg/dm2.day		26-JAN-22	R5711528
Fixed Soluble Dustfall	<0.10		0.10	mg/dm2.day		26-JAN-22	R5711528
Volatile Dustfall	<0.10		0.10	mg/dm2.day		26-JAN-22	R5711528
Volatile Insoluble Dustfall	<0.10		0.10	mg/dm2.day		26-JAN-22	R5711528
Volatile Soluble Dustfall	<0.10		0.10	mg/dm2.day		26-JAN-22	R5711528
Interval			1	days		27-JAN-22	R5709251
Mercury (Hg)-Total	<0.00000098		0.00000098	mg/dm2.day	27-JAN-22	27-JAN-22	R5710401
Total Metals in Dustfalls by ICPMS							
Aluminum (Al)-Total	0.00879		0.000059	mg/dm2.day	27-JAN-22	28-JAN-22	R5711423
Interval			1	days		27-JAN-22	R5710522
Antimony (Sb)-Total	<0.0000020		0.0000020	mg/dm2.day	27-JAN-22	28-JAN-22	R5711423
Arsenic (As)-Total	0.0000321		0.0000020	mg/dm2.day	27-JAN-22	28-JAN-22	R5711423
Barium (Ba)-Total	0.0000472		0.00000098	mg/dm2.day	27-JAN-22	28-JAN-22	R5711423
Beryllium (Be)-Total	<0.0000098		0.0000098	mg/dm2.day	27-JAN-22	28-JAN-22	R5711423
Bismuth (Bi)-Total	<0.0000098		0.0000098	mg/dm2.day	27-JAN-22	28-JAN-22	R5711423
Boron (B)-Total	<0.00020		0.00020	mg/dm2.day	27-JAN-22	28-JAN-22	R5711423
Cadmium (Cd)-Total	0.00000109		0.00000098	mg/dm2.day	27-JAN-22	28-JAN-22	R5711423
Calcium (Ca)-Total	0.0145		0.00039	mg/dm2.day	27-JAN-22	28-JAN-22	R5711423
Chromium (Cr)-Total	0.0000104		0.0000098	mg/dm2.day	27-JAN-22	28-JAN-22	R5711423
Cobalt (Co)-Total	0.0000022		0.0000020	mg/dm2.day	27-JAN-22	28-JAN-22	R5711423
Copper (Cu)-Total	0.0000914		0.0000098	mg/dm2.day	27-JAN-22	28-JAN-22	R5711423
Lead (Pb)-Total	0.0000154		0.00000098	mg/dm2.day	27-JAN-22	28-JAN-22	R5711423
Iron (Fe)-Total	0.00719		0.00059	mg/dm2.day	27-JAN-22	28-JAN-22	R5711423
Lithium (Li)-Total	<0.000098		0.000098	mg/dm2.day	27-JAN-22	28-JAN-22	R5711423
Magnesium (Mg)-Total	0.00432		0.000098	mg/dm2.day	27-JAN-22	28-JAN-22	R5711423
Manganese (Mn)-Total	0.000286		0.0000020	mg/dm2.day	27-JAN-22	28-JAN-22	R5711423
Molybdenum (Mo)-Total	0.00000172		0.00000098	mg/dm2.day	27-JAN-22	28-JAN-22	R5711423
Nickel (Ni)-Total	0.0000271		0.0000098	mg/dm2.day	27-JAN-22	28-JAN-22	R5711423
Phosphorus (P)-Total	<0.00098		0.00098	mg/dm2.day	27-JAN-22	28-JAN-22	R5711423
Potassium (K)-Total	0.00324		0.00098	mg/dm2.day	27-JAN-22	28-JAN-22	R5711423
Selenium (Se)-Total	<0.000020		0.000020	mg/dm2.day	27-JAN-22	28-JAN-22	R5711423
Silicon (Si)-Total	0.0111		0.00098	mg/dm2.day	27-JAN-22	28-JAN-22	R5711423
Silver (Ag)-Total	0.00000063		0.00000020	mg/dm2.day	27-JAN-22	28-JAN-22	R5711423
Sodium (Na)-Total	0.00216		0.00098	mg/dm2.day	27-JAN-22	28-JAN-22	R5711423
Strontium (Sr)-Total	0.0000401		0.0000020	mg/dm2.day	27-JAN-22	28-JAN-22	R5711423
Thallium (Tl)-Total	<0.0000020		0.0000020	mg/dm2.day	27-JAN-22	28-JAN-22	R5711423
Tin (Sn)-Total	<0.0000020		0.0000020	mg/dm2.day	27-JAN-22	28-JAN-22	R5711423
Titanium (Ti)-Total	<0.00020		0.00020	mg/dm2.day	27-JAN-22	28-JAN-22	R5711423
Uranium (U)-Total	<0.00000020		0.00000020	mg/dm2.day	27-JAN-22	28-JAN-22	R5711423
Vanadium (V)-Total	<0.000020		0.000020	mg/dm2.day	27-JAN-22	28-JAN-22	R5711423
Zinc (Zn)-Total	0.000284		0.000059	mg/dm2.day	27-JAN-22	28-JAN-22	R5711423
L2677874-43 DUSTFALL-TAIT ROAD (SOUTH)							
Sampled By: Client on 04-JAN-22							
Matrix: Dustfall							

* Refer to Referenced Information for Qualifiers (if any) and Methodology.

ALS ENVIRONMENTAL ANALYTICAL REPORT

Sample Details/Parameters	Result	Qualifier*	D.L.	Units	Extracted	Analyzed	Batch
L2677874-43 DUSTFALL-TAIT ROAD (SOUTH)							
Sampled By: Client on 04-JAN-22							
Matrix: Dustfall							
Dustfalls-Total, Soluble, Insoluble +FV							
Total Dustfall	0.69		0.10	mg/dm2.day		26-JAN-22	R5711528
Total Insoluble Dustfall	0.34		0.10	mg/dm2.day		26-JAN-22	R5711528
Total Soluble Dustfall	0.35		0.10	mg/dm2.day		26-JAN-22	R5711528
Fixed Dustfall	0.28		0.10	mg/dm2.day		26-JAN-22	R5711528
Fixed Insoluble Dustfall	0.28		0.10	mg/dm2.day		26-JAN-22	R5711528
Fixed Soluble Dustfall	<0.10		0.10	mg/dm2.day		26-JAN-22	R5711528
Volatile Dustfall	0.41		0.10	mg/dm2.day		26-JAN-22	R5711528
Volatile Insoluble Dustfall	<0.10		0.10	mg/dm2.day		26-JAN-22	R5711528
Volatile Soluble Dustfall	0.35		0.10	mg/dm2.day		26-JAN-22	R5711528
Interval			1	days		27-JAN-22	R5709251
Mercury (Hg)-Total	<0.00000098		0.00000098	mg/dm2.day	27-JAN-22	27-JAN-22	R5710401
Total Metals in Dustfalls by ICPMS							
Aluminum (Al)-Total	0.00497		0.000059	mg/dm2.day	27-JAN-22	28-JAN-22	R5711423
Interval			1	days		27-JAN-22	R5710522
Antimony (Sb)-Total	<0.0000020		0.0000020	mg/dm2.day	27-JAN-22	28-JAN-22	R5711423
Arsenic (As)-Total	0.0000297		0.0000020	mg/dm2.day	27-JAN-22	28-JAN-22	R5711423
Barium (Ba)-Total	0.0000337		0.00000098	mg/dm2.day	27-JAN-22	28-JAN-22	R5711423
Beryllium (Be)-Total	<0.0000098		0.0000098	mg/dm2.day	27-JAN-22	28-JAN-22	R5711423
Bismuth (Bi)-Total	<0.0000098		0.0000098	mg/dm2.day	27-JAN-22	28-JAN-22	R5711423
Boron (B)-Total	<0.00020		0.00020	mg/dm2.day	27-JAN-22	28-JAN-22	R5711423
Cadmium (Cd)-Total	<0.00000098		0.00000098	mg/dm2.day	27-JAN-22	28-JAN-22	R5711423
Calcium (Ca)-Total	0.0101		0.00039	mg/dm2.day	27-JAN-22	28-JAN-22	R5711423
Chromium (Cr)-Total	<0.0000098		0.0000098	mg/dm2.day	27-JAN-22	28-JAN-22	R5711423
Cobalt (Co)-Total	0.0000036		0.0000020	mg/dm2.day	27-JAN-22	28-JAN-22	R5711423
Copper (Cu)-Total	0.0000537		0.0000098	mg/dm2.day	27-JAN-22	28-JAN-22	R5711423
Lead (Pb)-Total	0.00000929		0.00000098	mg/dm2.day	27-JAN-22	28-JAN-22	R5711423
Iron (Fe)-Total	0.00444		0.00059	mg/dm2.day	27-JAN-22	28-JAN-22	R5711423
Lithium (Li)-Total	<0.000098		0.000098	mg/dm2.day	27-JAN-22	28-JAN-22	R5711423
Magnesium (Mg)-Total	0.00294		0.000098	mg/dm2.day	27-JAN-22	28-JAN-22	R5711423
Manganese (Mn)-Total	0.000168		0.0000020	mg/dm2.day	27-JAN-22	28-JAN-22	R5711423
Molybdenum (Mo)-Total	0.00000100		0.00000098	mg/dm2.day	27-JAN-22	28-JAN-22	R5711423
Nickel (Ni)-Total	0.0000816		0.0000098	mg/dm2.day	27-JAN-22	28-JAN-22	R5711423
Phosphorus (P)-Total	<0.00098		0.00098	mg/dm2.day	27-JAN-22	28-JAN-22	R5711423
Potassium (K)-Total	0.00173		0.00098	mg/dm2.day	27-JAN-22	28-JAN-22	R5711423
Selenium (Se)-Total	<0.000020		0.000020	mg/dm2.day	27-JAN-22	28-JAN-22	R5711423
Silicon (Si)-Total	0.00663		0.00098	mg/dm2.day	27-JAN-22	28-JAN-22	R5711423
Silver (Ag)-Total	0.00000035		0.00000020	mg/dm2.day	27-JAN-22	28-JAN-22	R5711423
Sodium (Na)-Total	0.00156		0.00098	mg/dm2.day	27-JAN-22	28-JAN-22	R5711423
Strontium (Sr)-Total	0.0000238		0.0000020	mg/dm2.day	27-JAN-22	28-JAN-22	R5711423
Thallium (Tl)-Total	<0.0000020		0.0000020	mg/dm2.day	27-JAN-22	28-JAN-22	R5711423
Tin (Sn)-Total	<0.0000020		0.0000020	mg/dm2.day	27-JAN-22	28-JAN-22	R5711423
Titanium (Ti)-Total	<0.00020		0.00020	mg/dm2.day	27-JAN-22	28-JAN-22	R5711423
Uranium (U)-Total	<0.00000020		0.00000020	mg/dm2.day	27-JAN-22	28-JAN-22	R5711423
Vanadium (V)-Total	<0.000020		0.000020	mg/dm2.day	27-JAN-22	28-JAN-22	R5711423
Zinc (Zn)-Total	0.000151		0.000059	mg/dm2.day	27-JAN-22	28-JAN-22	R5711423

* Refer to Referenced Information for Qualifiers (if any) and Methodology.

ALS ENVIRONMENTAL ANALYTICAL REPORT

Sample Details/Parameters	Result	Qualifier*	D.L.	Units	Extracted	Analyzed	Batch
L2677874-44 DUSTFALL-NORTHWEST							
Sampled By: Client on 31-DEC-21							
Matrix: Dustfall							
Dustfalls-Total, Soluble, Insoluble +FV							
Total Dustfall	0.13		0.10	mg/dm2.day		26-JAN-22	R5711528
Total Insoluble Dustfall	<0.10		0.10	mg/dm2.day		26-JAN-22	R5711528
Total Soluble Dustfall	<0.10		0.10	mg/dm2.day		26-JAN-22	R5711528
Fixed Dustfall	0.10		0.10	mg/dm2.day		26-JAN-22	R5711528
Fixed Insoluble Dustfall	0.10		0.10	mg/dm2.day		26-JAN-22	R5711528
Fixed Soluble Dustfall	<0.10		0.10	mg/dm2.day		26-JAN-22	R5711528
Volatile Dustfall	<0.10		0.10	mg/dm2.day		26-JAN-22	R5711528
Volatile Insoluble Dustfall	<0.10		0.10	mg/dm2.day		26-JAN-22	R5711528
Volatile Soluble Dustfall	<0.10		0.10	mg/dm2.day		26-JAN-22	R5711528
Interval			1	days		27-JAN-22	R5709251
Mercury (Hg)-Total	<0.0000011		0.0000011	mg/dm2.day	27-JAN-22	27-JAN-22	R5710401
Total Metals in Dustfalls by ICPMS							
Aluminum (Al)-Total	0.00216		0.000063	mg/dm2.day	27-JAN-22	28-JAN-22	R5711423
Interval			1	days		27-JAN-22	R5710522
Antimony (Sb)-Total	<0.0000021		0.0000021	mg/dm2.day	27-JAN-22	28-JAN-22	R5711423
Arsenic (As)-Total	0.0000310		0.0000021	mg/dm2.day	27-JAN-22	28-JAN-22	R5711423
Barium (Ba)-Total	0.0000208		0.0000011	mg/dm2.day	27-JAN-22	28-JAN-22	R5711423
Beryllium (Be)-Total	<0.000011		0.000011	mg/dm2.day	27-JAN-22	28-JAN-22	R5711423
Bismuth (Bi)-Total	<0.000011		0.000011	mg/dm2.day	27-JAN-22	28-JAN-22	R5711423
Boron (B)-Total	<0.00021		0.00021	mg/dm2.day	27-JAN-22	28-JAN-22	R5711423
Cadmium (Cd)-Total	<0.0000011		0.0000011	mg/dm2.day	27-JAN-22	28-JAN-22	R5711423
Calcium (Ca)-Total	0.00597		0.00042	mg/dm2.day	27-JAN-22	28-JAN-22	R5711423
Chromium (Cr)-Total	<0.000011		0.000011	mg/dm2.day	27-JAN-22	28-JAN-22	R5711423
Cobalt (Co)-Total	<0.0000021		0.0000021	mg/dm2.day	27-JAN-22	28-JAN-22	R5711423
Copper (Cu)-Total	0.000023		0.000011	mg/dm2.day	27-JAN-22	28-JAN-22	R5711423
Lead (Pb)-Total	0.0000041		0.0000011	mg/dm2.day	27-JAN-22	28-JAN-22	R5711423
Iron (Fe)-Total	0.00206		0.00063	mg/dm2.day	27-JAN-22	28-JAN-22	R5711423
Lithium (Li)-Total	<0.00011		0.00011	mg/dm2.day	27-JAN-22	28-JAN-22	R5711423
Magnesium (Mg)-Total	0.00156		0.00011	mg/dm2.day	27-JAN-22	28-JAN-22	R5711423
Manganese (Mn)-Total	0.0000808		0.0000021	mg/dm2.day	27-JAN-22	28-JAN-22	R5711423
Molybdenum (Mo)-Total	<0.0000011		0.0000011	mg/dm2.day	27-JAN-22	28-JAN-22	R5711423
Nickel (Ni)-Total	<0.000011		0.000011	mg/dm2.day	27-JAN-22	28-JAN-22	R5711423
Phosphorus (P)-Total	<0.0011		0.0011	mg/dm2.day	27-JAN-22	28-JAN-22	R5711423
Potassium (K)-Total	0.0014		0.0011	mg/dm2.day	27-JAN-22	28-JAN-22	R5711423
Selenium (Se)-Total	<0.000021		0.000021	mg/dm2.day	27-JAN-22	28-JAN-22	R5711423
Silicon (Si)-Total	0.0032		0.0011	mg/dm2.day	27-JAN-22	28-JAN-22	R5711423
Silver (Ag)-Total	<0.00000021		0.00000021	mg/dm2.day	27-JAN-22	28-JAN-22	R5711423
Sodium (Na)-Total	0.0012		0.0011	mg/dm2.day	27-JAN-22	28-JAN-22	R5711423
Strontium (Sr)-Total	0.0000132		0.0000021	mg/dm2.day	27-JAN-22	28-JAN-22	R5711423
Thallium (Tl)-Total	<0.0000021		0.0000021	mg/dm2.day	27-JAN-22	28-JAN-22	R5711423
Tin (Sn)-Total	<0.0000021		0.0000021	mg/dm2.day	27-JAN-22	28-JAN-22	R5711423
Titanium (Ti)-Total	<0.00021		0.00021	mg/dm2.day	27-JAN-22	28-JAN-22	R5711423
Uranium (U)-Total	<0.00000021		0.00000021	mg/dm2.day	27-JAN-22	28-JAN-22	R5711423
Vanadium (V)-Total	<0.000021		0.000021	mg/dm2.day	27-JAN-22	28-JAN-22	R5711423
Zinc (Zn)-Total	0.000072		0.000063	mg/dm2.day	27-JAN-22	28-JAN-22	R5711423

* Refer to Referenced Information for Qualifiers (if any) and Methodology.

Reference Information

Sample Parameter Qualifier Key:

Qualifier	Description
B	Method Blank exceeds ALS DQO. Associated sample results which are < Limit of Reporting or > 5 times blank level are considered reliable.
DLM	Detection Limit Adjusted due to sample matrix effects (e.g. chemical interference, colour, turbidity).
DUP-H	Duplicate results outside ALS DQO, due to sample heterogeneity.
MS-B	Matrix Spike recovery could not be accurately calculated due to high analyte background in sample.

Test Method References:

ALS Test Code	Matrix	Test Description	Method Reference**
AIR VOLUME-HIVOL-BU	Filter	Air volume (m3)	USEPA IO3.1
AIR VOLUME-M212 F-BU	Filter	Air volume (m3)	EPA QA Guidance Document 2.12
DUSTFALLS-ALL-DM2-VA	Dustfall	Dustfalls-Total, Soluble, Insoluble +FV	BC LAB MANUAL - PARTICULATE

This analysis is carried out using procedures modified from British Columbia Environmental Manual "Particulate."
Particulates or "Dustfalls" are determined gravimetrically. Total Insoluble and Soluble Dustfalls are determined by filtering a sample through a 0.45 um membrane filter and drying the filter and filtrate at 104 C, followed by ignition at 550 C. The remaining residue after 550 C represents the fixed portion and the weight lost on ignition represents the volatile portion. The sum of all fixed and volatile portions on both Insoluble and Soluble portions represents Total Dustfalls.

HG-DUST(DM2-CVAFS-VA	Dustfall	Total Mercury in Dustfalls by CVAFS	EPA 245.7

This analysis is carried out using procedures adapted from "Standard Methods for the Examination of Water and Wastewater" published by the American Public Health Association, and with procedures adapted from "Test Methods for Evaluating Solid Waste" SW-846 published by the United States Environmental Protection Agency (EPA). Instrumental analysis is by cold vapour atomic fluorescence spectrophotometry or atomic absorption spectrophotometry (EPA Method 245.7).

MET-DUST(DM2)-MS-VA	Dustfall	Total Metals in Dustfalls by ICPMS	EPA 6020A

This analysis is carried out using procedures adapted from "Standard Methods for the Examination of Water and Wastewater" published by the American Public Health Association, and with procedures adapted from "Test Methods for Evaluating Solid Waste" SW-846 published by the United States Environmental Protection Agency (EPA). Instrumental analysis is by inductively coupled plasma - mass spectrometry (EPA Method 6020A).

MET-IO3.5-MS-BU	Filter	Metals on High Volume Filter by ICPMS	IO3.5

After weighing (if required), hivol filters are sub-sampled and leached with nitric acid to extract available metal analytes. After dilution, the extracts are submitted to the ICPMS instrument for analysis.

PART-HIVOL-GRAV-BU	Filter	Particulate on High Volume Filter	USEPA IO3.1
PART-M212 F-GRAV-BU	Filter	PM via Gravimetric Analysis	EPA QA Guidance Document 2.12

The particulate matter collected onto tare-weighed 47mm Teflon Disc filter media is desiccated then brought to a constant weight on an analytical balance. Results are presented in ug (per filter). An air volume can be included to allow for reporting in ug/m3.

** ALS test methods may incorporate modifications from specified reference methods to improve performance.

The last two letters of the above test code(s) indicate the laboratory that performed analytical analysis for that test. Refer to the list below:

Laboratory Definition Code	Laboratory Location
BU	ALS ENVIRONMENTAL - BURLINGTON, ONTARIO, CANADA
VA	ALS ENVIRONMENTAL - VANCOUVER, BRITISH COLUMBIA, CANADA

Chain of Custody Numbers:

Reference Information

Test Method References:

ALS Test Code	Matrix	Test Description	Method Reference**

GLOSSARY OF REPORT TERMS

Surrogates are compounds that are similar in behaviour to target analyte(s), but that do not normally occur in environmental samples. For applicable tests, surrogates are added to samples prior to analysis as a check on recovery. In reports that display the D.L. column, laboratory objectives for surrogates are listed there.
mg/kg - milligrams per kilogram based on dry weight of sample
mg/kg wwt - milligrams per kilogram based on wet weight of sample
mg/kg lwt - milligrams per kilogram based on lipid-adjusted weight
mg/L - unit of concentration based on volume, parts per million.
< - Less than.
D.L. - The reporting limit.
N/A - Result not available. Refer to qualifier code and definition for explanation.

Test results reported relate only to the samples as received by the laboratory.
UNLESS OTHERWISE STATED, ALL SAMPLES WERE RECEIVED IN ACCEPTABLE CONDITION.
Analytical results in unsigned test reports with the DRAFT watermark are subject to change, pending final QC review.

Quality Control Report

Workorder: L2677874 Report Date: 31-JAN-22

Client: New Gold Inc. Rainy River Project
5967 Highway 11/71 P.O. Box 5
Emo ON P0W 1E0

Contact: Sarah Flesher

Test	Matrix	Reference	Result	Qualifier	Units	RPD	Limit	Analyzed
MET-IO3.5-MS-BU	**Filter**							
Batch R5710136								
WG3689671-3 DUP		**L2677874-1**						
Arsenic (As)		<3.0	<3.0	RPD-NA	ug	N/A	20	25-JAN-22
Cadmium (Cd)		<2.0	<2.0	RPD-NA	ug	N/A	20	25-JAN-22
Cobalt (Co)		<2.0	<2.0	RPD-NA	ug	N/A	20	25-JAN-22
Chromium (Cr)		<5.0	<5.0	RPD-NA	ug	N/A	20	25-JAN-22
Copper (Cu)		96.3	114		ug	17	20	25-JAN-22
Iron (Fe)		259	305		ug	16	25	25-JAN-22
Manganese (Mn)		8.4	8.7		ug	4.2	20	25-JAN-22
Nickel (Ni)		<3.0	<3.0	RPD-NA	ug	N/A	20	25-JAN-22
Lead (Pb)		<3.0	<3.0	RPD-NA	ug	N/A	20	25-JAN-22
Selenium (Se)		<10	<10	RPD-NA	ug	N/A	20	25-JAN-22
Vanadium (V)		<5.0	<5.0	RPD-NA	ug	N/A	20	25-JAN-22
Zinc (Zn)		16.5	16.8		ug	1.9	20	25-JAN-22
WG3689671-2 LCS								
Arsenic (As)			99.9		%		80-120	25-JAN-22
Cadmium (Cd)			109.6		%		80-120	25-JAN-22
Cobalt (Co)			102.0		%		80-120	25-JAN-22
Chromium (Cr)			106.0		%		80-120	25-JAN-22
Copper (Cu)			111.0		%		80-120	25-JAN-22
Iron (Fe)			102.4		%		80-120	25-JAN-22
Manganese (Mn)			100.0		%		80-120	25-JAN-22
Nickel (Ni)			102.0		%		80-120	25-JAN-22
Lead (Pb)			109.0		%		80-120	25-JAN-22
Selenium (Se)			102.0		%		80-120	25-JAN-22
Vanadium (V)			103.0		%		80-120	25-JAN-22
Zinc (Zn)			104.5		%		80-120	25-JAN-22
WG3689671-1 MB								
Arsenic (As)			<3.0		ug		3	25-JAN-22
Cadmium (Cd)			<0.027		ug		0.027	25-JAN-22
Cobalt (Co)			<0.030		ug		0.03	25-JAN-22
Chromium (Cr)			<3.4		ug		3.4	25-JAN-22
Copper (Cu)			<1.0		ug		1	25-JAN-22
Iron (Fe)			<12		ug		12	25-JAN-22
Manganese (Mn)			<0.45		ug		0.45	25-JAN-22
Nickel (Ni)			<0.25		ug		0.25	25-JAN-22
Lead (Pb)			<0.12		ug		0.12	25-JAN-22

Quality Control Report

Test	Matrix	Reference	Result	Qualifier	Units	RPD	Limit	Analyzed
MET-IO3.5-MS-BU	**Filter**							
Batch R5710136								
WG3689671-1 MB								
Selenium (Se)			<1.3		ug		1.25	25-JAN-22
Vanadium (V)			<5.0		ug		10	25-JAN-22
Zinc (Zn)			<4.5		ug		4.5	25-JAN-22
WG3689671-4 MS		**L2677874-1**						
Arsenic (As)			101.9		%		75-125	25-JAN-22
Cadmium (Cd)			108.4		%		75-125	25-JAN-22
Cobalt (Co)			104.7		%		75-125	25-JAN-22
Chromium (Cr)			108.4		%		75-125	25-JAN-22
Copper (Cu)			N/A	MS-B	%		-	25-JAN-22
Iron (Fe)			N/A	MS-B	%		-	25-JAN-22
Manganese (Mn)			105.4		%		75-125	25-JAN-22
Nickel (Ni)			103.3		%		75-125	25-JAN-22
Lead (Pb)			113.4		%		75-125	25-JAN-22
Selenium (Se)			103.3		%		75-125	25-JAN-22
Vanadium (V)			104.2		%		75-125	25-JAN-22
Zinc (Zn)			110.2		%		75-125	25-JAN-22
PART-HIVOL-GRAV-BU	**Filter**							
Batch R5702339								
WG3687135-2 DUP		**L2677874-1**						
Total particulate		12700	12200		ug	4.0	5	10-JAN-22
WG3687135-1 MB								
Total particulate			<100		ug		100	10-JAN-22
PART-M212 F-GRAV-BU	**Filter**							
Batch R5711709								
WG3690555-3 DUP		**L2677874-17**						
Total particulate		67	66		ug	1.5	10	30-JAN-22
WG3690555-1 MB								
Total particulate			<15		ug		15	30-JAN-22
WG3690555-2 MB								
Total particulate			<15		ug		15	30-JAN-22
DUSTFALLS-ALL-DM2-VA	**Dustfall**							
Batch R5711528								
WG3689644-1 MB								
Total Dustfall			<0.10		mg/dm2.day		0.1	26-JAN-22
Total Insoluble Dustfall			<0.10		mg/dm2.day		0.1	26-JAN-22

Quality Control Report

Test	Matrix	Reference	Result	Qualifier	Units	RPD	Limit	Analyzed
DUSTFALLS-ALL-DM2-VA	**Dustfall**							
Batch R5711528								
WG3689644-1 MB								
Total Soluble Dustfall			<0.10		mg/dm2.day		0.1	26-JAN-22
Fixed Dustfall			<0.10		mg/dm2.day		0.1	26-JAN-22
Fixed Insoluble Dustfall			<0.10		mg/dm2.day		0.1	26-JAN-22
Fixed Soluble Dustfall			<0.10		mg/dm2.day		0.1	26-JAN-22
Volatile Dustfall			<0.10		mg/dm2.day		0.1	26-JAN-22
Volatile Insoluble Dustfall			<0.10		mg/dm2.day		0.1	26-JAN-22
Volatile Soluble Dustfall			<0.10		mg/dm2.day		0.1	26-JAN-22
HG-DUST(DM2-CVAFS-VA	**Dustfall**							
Batch R5710401								
WG3689447-3 DUP		**L2677874-34**						
Mercury (Hg)-Total		<0.00000085	<0.0000008	RPD-NA	mg/dm2.day	N/A	20	27-JAN-22
WG3689447-2 LCS								
Mercury (Hg)-Total			89.0		%		70-130	27-JAN-22
WG3689447-1 MB								
Mercury (Hg)-Total			<0.0000013		mg/dm2.day		0.0000013	27-JAN-22
WG3689447-4 MS		**L2677874-42**						
Mercury (Hg)-Total			80.2		%		70-130	27-JAN-22
MET-DUST(DM2)-MS-VA	**Dustfall**							
Batch R5711423								
WG3689446-3 DUP		**L2677874-34**						
Aluminum (Al)-Total		0.0158	0.0152		mg/dm2.day	3.4	20	28-JAN-22
Antimony (Sb)-Total		0.0000020	<0.0000017	RPD-NA	mg/dm2.day	N/A	20	28-JAN-22
Arsenic (As)-Total		0.0000338	0.0000346		mg/dm2.day	2.2	20	28-JAN-22
Barium (Ba)-Total		0.0000750	0.0000769		mg/dm2.day	2.5	20	28-JAN-22
Beryllium (Be)-Total		<0.0000085	<0.0000085	RPD-NA	mg/dm2.day	N/A	20	28-JAN-22
Bismuth (Bi)-Total		<0.0000085	<0.0000085	RPD-NA	mg/dm2.day	N/A	20	28-JAN-22
Boron (B)-Total		<0.00017	<0.00017	RPD-NA	mg/dm2.day	N/A	20	28-JAN-22
Cadmium (Cd)-Total		0.00000128	0.00000131		mg/dm2.day	2.4	20	28-JAN-22
Calcium (Ca)-Total		0.0225	0.0227		mg/dm2.day	1.0	20	28-JAN-22
Chromium (Cr)-Total		0.0000139	0.0000139		mg/dm2.day	0.1	20	28-JAN-22
Cobalt (Co)-Total		0.0000035	0.0000035		mg/dm2.day	2.1	20	28-JAN-22
Copper (Cu)-Total		0.000157	0.000115	DUP-H	mg/dm2.day	30	20	28-JAN-22
Lead (Pb)-Total		0.0000256	0.0000221		mg/dm2.day	15	20	28-JAN-22
Iron (Fe)-Total		0.0123	0.0122		mg/dm2.day	1.3	20	28-JAN-22
Lithium (Li)-Total		<0.000085	<0.000085	RPD-NA	mg/dm2.day	N/A	20	28-JAN-22

Quality Control Report

Test	Matrix	Reference	Result	Qualifier	Units	RPD	Limit	Analyzed
MET-DUST(DM2)-MS-VA	**Dustfall**							
Batch R5711423								
WG3689446-3 DUP		**L2677874-34**						
Magnesium (Mg)-Total		0.00692	0.00692		mg/dm2.day	0.0	20	28-JAN-22
Manganese (Mn)-Total		0.000427	0.000439		mg/dm2.day	2.8	20	28-JAN-22
Molybdenum (Mo)-Total		<0.00000085	0.00000115	RPD-NA	mg/dm2.day	N/A	20	28-JAN-22
Nickel (Ni)-Total		0.0000229	0.0000251		mg/dm2.day	9.1	20	28-JAN-22
Phosphorus (P)-Total		<0.00085	<0.00085	RPD-NA	mg/dm2.day	N/A	20	28-JAN-22
Potassium (K)-Total		0.00365	0.00372		mg/dm2.day	1.8	20	28-JAN-22
Selenium (Se)-Total		<0.000017	<0.000017	RPD-NA	mg/dm2.day	N/A	20	28-JAN-22
Silicon (Si)-Total		0.0218	0.0196		mg/dm2.day	11	20	28-JAN-22
Silver (Ag)-Total		0.00000089	0.00000068	J	mg/dm2.day	0.000000	0.00000034	28-JAN-22
Sodium (Na)-Total		0.00253	0.00237		mg/dm2.day	6.7	20	28-JAN-22
Strontium (Sr)-Total		0.0000658	0.0000637		mg/dm2.day	3.3	20	28-JAN-22
Thallium (Tl)-Total		<0.0000017	<0.0000017	RPD-NA	mg/dm2.day	N/A	20	28-JAN-22
Tin (Sn)-Total		0.0000021	<0.0000017	RPD-NA	mg/dm2.day	N/A	20	28-JAN-22
Titanium (Ti)-Total		0.00030	0.00025		mg/dm2.day	18	20	28-JAN-22
Uranium (U)-Total		0.00000029	0.00000028		mg/dm2.day	4.2	20	28-JAN-22
Vanadium (V)-Total		0.000025	0.000024		mg/dm2.day	0.9	20	28-JAN-22
Zinc (Zn)-Total		0.000341	0.000324		mg/dm2.day	5.3	20	28-JAN-22
WG3689446-2 LCS								
Aluminum (Al)-Total			100.1		%		80-120	28-JAN-22
Antimony (Sb)-Total			101.9		%		80-120	28-JAN-22
Arsenic (As)-Total			97.3		%		80-120	28-JAN-22
Barium (Ba)-Total			97.4		%		80-120	28-JAN-22
Beryllium (Be)-Total			101.2		%		80-120	28-JAN-22
Bismuth (Bi)-Total			98.8		%		80-120	28-JAN-22
Boron (B)-Total			95.7		%		80-120	28-JAN-22
Cadmium (Cd)-Total			97.7		%		80-120	28-JAN-22
Calcium (Ca)-Total			98.3		%		80-120	28-JAN-22
Chromium (Cr)-Total			95.6		%		80-120	28-JAN-22
Cobalt (Co)-Total			96.5		%		80-120	28-JAN-22
Copper (Cu)-Total			95.5		%		80-120	28-JAN-22
Lead (Pb)-Total			96.1		%		80-120	28-JAN-22
Iron (Fe)-Total			101.0		%		80-120	28-JAN-22
Lithium (Li)-Total			96.1		%		80-120	28-JAN-22
Magnesium (Mg)-Total			99.0		%		80-120	28-JAN-22

Quality Control Report

Test	Matrix	Reference	Result	Qualifier	Units	RPD	Limit	Analyzed
MET-DUST(DM2)-MS-VA	**Dustfall**							
Batch R5711423								
WG3689446-2 LCS								
Manganese (Mn)-Total			97.4		%		80-120	28-JAN-22
Molybdenum (Mo)-Total			98.3		%		80-120	28-JAN-22
Nickel (Ni)-Total			97.5		%		80-120	28-JAN-22
Phosphorus (P)-Total			99.8		%		80-120	28-JAN-22
Potassium (K)-Total			97.5		%		80-120	28-JAN-22
Selenium (Se)-Total			98.3		%		80-120	28-JAN-22
Silicon (Si)-Total			90.4		%		80-120	28-JAN-22
Silver (Ag)-Total			86.8		%		80-120	28-JAN-22
Sodium (Na)-Total			97.7		%		80-120	28-JAN-22
Strontium (Sr)-Total			96.6		%		80-120	28-JAN-22
Thallium (Tl)-Total			97.6		%		80-120	28-JAN-22
Tin (Sn)-Total			95.7		%		80-120	28-JAN-22
Titanium (Ti)-Total			93.0		%		80-120	28-JAN-22
Uranium (U)-Total			99.8		%		80-120	28-JAN-22
Vanadium (V)-Total			95.9		%		80-120	28-JAN-22
Zinc (Zn)-Total			95.6		%		80-120	28-JAN-22
WG3689446-1 MB								
Aluminum (Al)-Total			0.000128	B	mg/dm2.day		0.000079	28-JAN-22
Antimony (Sb)-Total			<0.0000026		mg/dm2.day		0.0000026	28-JAN-22
Arsenic (As)-Total			<0.0000026		mg/dm2.day		0.0000026	28-JAN-22
Barium (Ba)-Total			<0.0000013		mg/dm2.day		0.0000013	28-JAN-22
Beryllium (Be)-Total			<0.000013		mg/dm2.day		0.000013	28-JAN-22
Bismuth (Bi)-Total			<0.000013		mg/dm2.day		0.000013	28-JAN-22
Boron (B)-Total			<0.00026		mg/dm2.day		0.00026	28-JAN-22
Cadmium (Cd)-Total			<0.0000013		mg/dm2.day		0.0000013	28-JAN-22
Calcium (Ca)-Total			<0.00052		mg/dm2.day		0.00052	28-JAN-22
Chromium (Cr)-Total			<0.000013		mg/dm2.day		0.000013	28-JAN-22
Cobalt (Co)-Total			<0.0000026		mg/dm2.day		0.0000026	28-JAN-22
Copper (Cu)-Total			<0.000013		mg/dm2.day		0.000013	28-JAN-22
Lead (Pb)-Total			<0.0000013		mg/dm2.day		0.0000013	28-JAN-22
Iron (Fe)-Total			<0.00079		mg/dm2.day		0.00079	28-JAN-22
Lithium (Li)-Total			<0.00013		mg/dm2.day		0.00013	28-JAN-22
Magnesium (Mg)-Total			<0.00013		mg/dm2.day		0.00013	28-JAN-22
Manganese (Mn)-Total			<0.0000026		mg/dm2.day		0.0000026	28-JAN-22

Quality Control Report

Test	Matrix	Reference	Result	Qualifier	Units	RPD	Limit	Analyzed
MET-DUST(DM2)-MS-VA	**Dustfall**							
Batch R5711423								
WG3689446-1 MB								
Molybdenum (Mo)-Total			<0.0000013		mg/dm2.day		0.0000013	28-JAN-22
Nickel (Ni)-Total			<0.000013		mg/dm2.day		0.000013	28-JAN-22
Phosphorus (P)-Total			<0.0013		mg/dm2.day		0.0013	28-JAN-22
Potassium (K)-Total			<0.0013		mg/dm2.day		0.0013	28-JAN-22
Selenium (Se)-Total			<0.000026		mg/dm2.day		0.000026	28-JAN-22
Silicon (Si)-Total			<0.0013		mg/dm2.day		0.0013	28-JAN-22
Silver (Ag)-Total			<0.0000002		mg/dm2.day		0.00000026	28-JAN-22
Sodium (Na)-Total			<0.0013		mg/dm2.day		0.0013	28-JAN-22
Strontium (Sr)-Total			<0.0000026		mg/dm2.day		0.0000026	28-JAN-22
Thallium (Tl)-Total			<0.0000026		mg/dm2.day		0.0000026	28-JAN-22
Tin (Sn)-Total			<0.0000026		mg/dm2.day		0.0000026	28-JAN-22
Titanium (Ti)-Total			<0.00026		mg/dm2.day		0.00026	28-JAN-22
Uranium (U)-Total			<0.0000002		mg/dm2.day		0.00000026	28-JAN-22
Vanadium (V)-Total			<0.000026		mg/dm2.day		0.000026	28-JAN-22
Zinc (Zn)-Total			<0.000079		mg/dm2.day		0.000079	28-JAN-22

Quality Control Report

Legend:

Limit	ALS Control Limit (Data Quality Objectives)
DUP	Duplicate
RPD	Relative Percent Difference
N/A	Not Available
LCS	Laboratory Control Sample
SRM	Standard Reference Material
MS	Matrix Spike
MSD	Matrix Spike Duplicate
ADE	Average Desorption Efficiency
MB	Method Blank
IRM	Internal Reference Material
CRM	Certified Reference Material
CCV	Continuing Calibration Verification
CVS	Calibration Verification Standard
LCSD	Laboratory Control Sample Duplicate

Sample Parameter Qualifier Definitions:

Qualifier	Description
B	Method Blank exceeds ALS DQO. Associated sample results which are < Limit of Reporting or > 5 times blank level are considered reliable.
DUP-H	Duplicate results outside ALS DQO, due to sample heterogeneity.
J	Duplicate results and limits are expressed in terms of absolute difference.
MS-B	Matrix Spike recovery could not be accurately calculated due to high analyte background in sample.
RPD-NA	Relative Percent Difference Not Available due to result(s) being less than detection limit.

Hold Time Exceedances:

All test results reported with this submission were conducted within ALS recommended hold times.

ALS recommended hold times may vary by province. They are assigned to meet known provincial and/or federal government requirements. In the absence of regulatory hold times, ALS establishes recommendations based on guidelines published by the US EPA, APHA Standard Methods, or Environment Canada (where available). For more information, please contact ALS.

The ALS Quality Control Report is provided to ALS clients upon request. ALS includes comprehensive QC checks with every analysis to ensure our high standards of quality are met. Each QC result has a known or expected target value, which is compared against pre-determined data quality objectives to provide confidence in the accuracy of associated test results.

Please note that this report may contain QC results from anonymous Sample Duplicates and Matrix Spikes that do not originate from this Work Order.

ALS Environmental

Chain of Custody / Analytical Request Form
1435 Norjohn Court, Unit 1, Burlington, Ontario, Canada, L7L 0E6
Tel +1-905-331-3111 Fax +1-905-331-4567 www.alsglobal.com

Report To		Report Format / Distribution		Service Requested
Company:	New Gold Inc.	☑ Standard ☐ Other:		☑ Regular Service
Contact:	Sarah Flesher	☑ PDF ☑ Excel ☐ Digital ☐ Fax		☐ Rush Service (with prior consultation) - surcharge applies
Address:	24 Marr Rd. Barwick ON P0W 1A0	Email 1:	sarah.flesher@newgold.com	☐ Other - Please contact ALS
Phone:	807-234-8200 ext. 8049 Fax:	Email 2:		Analysis Request
Invoice To	Same as Report ? ☑ Yes ☐ No	Client / Project Information		
Company:		Job #:	Air Quality	
Contact:		Location:		
Address:		PO:	450000093	
Phone:	Fax:	Sampled by:		
Lab Work Order #		ALS Contact:		

Sample #	Sample Identification (This description will appear on the report)	Date (dd-mmm-yy)	Time (hh:mm)	Sample Type	TSP and Metals	Pm 2.5	Dustfall Incl. volatile								Hazardous? Provide Deta
1	SOUTH-TSP-397	6-Dec-2021	12:00	Air	X										
2	SOUTH-TSP-398	12-Dec-2021	12:00	Air	X										
3	SOUTH-TSP-399	18-Dec-2021	12:00	Air	X										
4	SOUTH-TSP-400	24-Dec-2021	12:00	Air	X										
5	SOUTH-TSP-401	30-Dec-2021	12:00	Air	X										
6	NORTH-TSP-397	6-Dec-2021	12:00	Air	X										
7	NORTH-TSP-398	12-Dec-2021	12:00	Air	X										
8	NORTH-TSP-399	18-Dec-2021	12:00	Air	X										
9	NORTH-TSP-400	24-Dec-2021	12:00	Air	X										
10	NORTH-TSP-401	30-Dec-2021	12:00	Air	X										
11	NORTHWEST-TSP-397	6-Dec-2021	12:00	Air	X										
12	NORTHWEST-TSP-398	12-Dec-2021	12:00	Air	X										
13	NORTHWEST-TSP-399	18-Dec-2021	12:00	Air	X										
14	NORTHWEST-TSP-400	24-Dec-2021	12:00	Air	X										
15	NORTHWEST-TSP-401	30-Dec-2021	12:00	Air	X										
17	SOUTH-PM2.5-397	6-Dec-2021	12:00	Air		X									
18	SOUTH-PM2.5-398	12-Dec-2021	12:00	Air		X									
19	SOUTH-PM2.5-399	18-Dec-2021	12:00	Air		X									
20	SOUTH-PM2.5-400	24-Dec-2021	12:00	Air		X									
21	SOUTH-PM2.5-401	30-Dec-2021	12:00	Air		X									
22	NORTH-PM2.5-397	6-Dec-2021	12:00	Air		X									
23	NORTH-PM2.5-398	12-Dec-2021	12:00	Air		X									
24	NORTH-PM2.5-399	18-Dec-2021	12:00	Air		X									
25	NORTH-PM2.5-400	24-Dec-2021	12:00	Air		X									
26	NORTH-PM2.5-401	30-Dec-2021	12:00	Air		X									
27	NORTHWEST-PM2.5-397	6-Dec-2021	12:00	Air		X									
28	NORTHWEST-PM2.5-398	12-Dec-2021	12:00	Air		X									
29	NORTHWEST-PM2.5-399	18-Dec-2021	12:00	Air		X									
30	NORTHWEST-PM2.5-400	24-Dec-2021	12:00	Air		X									
31	NORTHWEST-PM2.5-401	30-Dec-2021	12:00	Air		X									
16	TSP Travel Blank	5-Jan-2022	12:00	Air	X										
32	PM2.5 Travel Blank	5-Jan-2022	12:00	Air		X									
33	NOP1-Dustfall-12	31-Dec-2021	12:00	Air			X								
34	CP1-Dustfall-12	4-Jan-2022	12:00	Air			X								
35	WCP1-Dustfall-12	31-Dec-2021	12:00	Air			X								
36	GH1-Dustfall-12	31-Dec-2021	12:00	Air			X								
37	SPP1-Dustfall-50	8-Dec-2021	12:00	Air			X								
38	SPP1-Dustfall-51	15-Dec-2021	12:00	Air			X								
39	SPP1-Dustfall-52	22-Dec-2021	12:00	Air			X								
40	SPP1-Dustfall-53	29-Dec-2021	12:00	Air			X								
41	SPP1-Dustfall-54	5-Jan-2022	12:00	Air			X								
42	Dustfall - Gallinger Road	4-Jan-2022	12:00	Air			X								
43	Dustfall - Tait Road (South)	4-Jan-2022	12:00	Air			X								
44	Dustfall- Northwest	31-Dec-2021	12:00	Air			X								

Special Instructions / Regulations / Hazardous Details

Please Note: Dustfall canisters are empty/ only partially full, please follow-through with sample analysis

By the use of this form the user acknowledges and agrees with the Terms and Conditions as provided by ALS

Released by:	Date (dd-mmm-yy)	Time (hh:mm)	Received by:	Date:	Time:	Temperature:	Verified by:	Date:	Time:	Obs
	5-Jan-2022	11:00	AARON BUCTON	10-JAN-2022	17:25	-9.2 °C				Yes If Ye

L2677874-COFC

APPENDIX D:
HI-VOL & PQ200 SAMPLER CALIBRATION SHEETS

TE-5170 Calibration Worksheet

Site Information

Location: Cleves, Ohio	**Site ID:** 145	**Date:** 22-Oct-21
Sampler: 'E-5170 MFC	**Serial No:** 367	**Tech:** Jim Tisch

Site Conditions

Barometric Pressure (in Hg): 28.62	**Corrected Pressure (mm Hg):** 727
Temperature (deg F): 41	**Temperature (deg K):** 278
Average Press. (in Hg): 29.65	**Corrected Average (mm Hg):** 753
Average Temp. (deg F): 47	**Average Temp. (deg K):** 281

Calibration Orifice

Make: Tisch	**Qstd Slope:** 1.66423
Model: TE-5028A	**Qstd Intercept:** -0.01520
Serial#: 1179	**Date Certified:** 24-Oct-14

Calibration Information

Plate or Test #	H2O (in)	Qstd (m3/min)	I (chart)	IC (corrected)
1	4.25	1.264	48.0	48.61
2	3.44	1.138	45.0	45.57
3	2.65	1.000	41.0	41.52
4	2.23	0.918	38.0	38.49
5	1.97	0.863	36.0	36.46

Linear Regression

Slope: 30.3682
Intercept: 10.6546
Corr. Coeff: 0.9963
# of Observations: 5

Calculations

Qstd = 1/m[Sqrt(H2O(Pa/Pstd)(Tstd/Ta))-b]
IC = I[Sqrt(Pa/Pstd)(Tstd/Ta)]

Qstd = standard flow rate
IC = corrected chart response
I = actual chart response
m = calibrator Qstd slope
b = calibrator Qstd intercept
Ta = actual temperature during calibration (deg K)
Pa = actual pressure during calibration (mm Hg)
Tstd = 298 deg K
Pstd = 760 mm Hg
For subsequent calculation of sampler flow:
1/m((I)[Sqrt(298/Tav)(Pav/760)]-b)

m = sampler slope
b = sampler intercept
I = chart response
Tav = daily average temperature
Pav = daily average pressure

Average I (chart): 44.0
Average Flow Calculation m3/min
1.133559264
Average Flow Calculation in CFM
40.02597762
Sample Time (Hrs): 24.0
Total Flow in m3/min
1632.32534
Total Flow in CFM
57637.40777

NOTE: Ensure calibration orifice has been certified within 12 months of use

TE-5170 Calibration Worksheet

Site Information

Location: Cleves, Ohio	**Site ID:** 145	**Date:** 22-Oct-21
Sampler: 'E-5170 MFC	**Serial No:** 367	**Tech:** Jim Tisch

Site Conditions

Barometric Pressure (in Hg): 28.62	**Corrected Pressure (mm Hg):** 727
Temperature (deg F): 41	**Temperature (deg K):** 278
Average Press. (in Hg): 29.65	**Corrected Average (mm Hg):** 753
Average Temp. (deg F): 47	**Average Temp. (deg K):** 281

Calibration Orifice

Make: Tisch	**Qstd Slope:** 1.66423
Model: TE-5028A	**Qstd Intercept:** -0.01520
Serial#: 1179	**Date Certified:** 24-Oct-14

Calibration Information

Plate or Test #	H2O (in)	Qstd (m3/min)	I (chart)	IC (corrected)
1	6.13	1.516	50.0	50.64
2	5.34	1.415	47.0	47.60
3	4.25	1.264	42.0	42.54
4	3.55	1.156	39.0	39.50
5	3.00	1.063	36.0	36.46

Linear Regression

Slope: 31.3268
Intercept: 3.1615
Corr. Coeff: 0.9997
# of Observations: 5

Calculations

Qstd = 1/m[Sqrt(H2O(Pa/Pstd)(Tstd/Ta))-b]
IC = I[Sqrt(Pa/Pstd)(Tstd/Ta)]

Qstd = standard flow rate
IC = corrected chart response
I = actual chart response
m = calibrator Qstd slope
b = calibrator Qstd intercept
Ta = actual temperature during calibration (deg K)
Pa = actual pressure during calibration (mm Hg)
Tstd = 298 deg K
Pstd = 760 mm Hg
For subsequent calculation of sampler flow:
1/m((I)[Sqrt(298/Tav)(Pav/760)]-b)

m = sampler slope
b = sampler intercept
I = chart response
Tav = daily average temperature
Pav = daily average pressure

Average I (chart): 44.0
Average Flow Calculation m3/min
1.33806555
Average Flow Calculation in CFM
47.24709456
Sample Time (Hrs): 24.0
Total Flow in m3/min
1926.814392
Total Flow in CFM
68035.81616

NOTE: Ensure calibration orifice has been certified within 12 months of use

TE-5170 Calibration Worksheet

Site Information

Location: Cleves, Ohio	**Site ID:** 145	**Date:** 22-Oct-21
Sampler: 'E-5170 MFC	**Serial No:** 367	**Tech:** Jim Tisch

Site Conditions

Barometric Pressure (in Hg): 28.62	**Corrected Pressure (mm Hg):** 727
Temperature (deg F): 41	**Temperature (deg K):** 278
Average Press. (in Hg): 29.65	**Corrected Average (mm Hg):** 753
Average Temp. (deg F): 47	**Average Temp. (deg K):** 281

Calibration Orifice

Make: Tisch	**Qstd Slope:** 1.66423
Model: TE-5028A	**Qstd Intercept:** -0.01520
Serial#: 1179	**Date Certified:** 24-Oct-14

Calibration Information

Plate or Test #	H2O (in)	Qstd (m3/min)	I (chart)	IC (corrected)
1	4.48	1.297	50.0	50.64
2	3.60	1.164	46.0	46.59
3	2.70	1.009	42.0	42.54
4	2.15	0.901	39.0	39.50
5	1.63	0.786	36.0	36.46

Linear Regression

Slope: 27.6036
Intercept: 14.6703
Corr. Coeff: 0.9997
# of Observations: 5

Calculations

Qstd = 1/m[Sqrt(H2O(Pa/Pstd)(Tstd/Ta))-b]
IC = I[Sqrt(Pa/Pstd)(Tstd/Ta)]

Qstd = standard flow rate
IC = corrected chart response
I = actual chart response
m = calibrator Qstd slope
b = calibrator Qstd intercept
Ta = actual temperature during calibration (deg K)
Pa = actual pressure during calibration (mm Hg)
Tstd = 298 deg K
Pstd = 760 mm Hg
For subsequent calculation of sampler flow:
1/m((I)[Sqrt(298/Tav)(Pav/760)]-b)

m = sampler slope
b = sampler intercept
I = chart response
Tav = daily average temperature
Pav = daily average pressure

Average I (chart): 44.0
Average Flow Calculation m3/min
1.101612822
Average Flow Calculation in CFM
38.89794873
Sample Time (Hrs): 24.0
Total Flow in m3/min
1586.322463
Total Flow in CFM
56013.04618

NOTE: Ensure calibration orifice has been certified within 12 months of use

APPENDIX E:
SAMPLE EDIT LOGS

APPENDIX E-1: TOTAL SUSPENDED PARTICULATE SAMPLE EDIT LOG

Emitter: New Gold Inc.

Address: Rainy River Mine

Station Name: Tait Road Station

Station Location: Near McMillan Road along the realigned Highway 600

Pollutant/Parameter: Total Suspended Particulate (TSP)

Measurement Instrument: High Volume (Hi-Vol) Sampler

Start Date: October 1, 2021

End Date: December 30, 2021

#	Action	Date	Reason
1	Invalid sample	Oct 1	Sample volume of 1,438 m3 was below the lower volume limit of 1,468 m3.
2	Invalid sample	Oct 7	Sample volume of 1,446 m3 was below the lower volume limit of 1,468 m3.
3	Invalid sample	Oct 19	Sample volume of 1,456 m3 was below the lower volume limit of 1,468 m3.
4	Invalid sample	Oct 25	Sample volume of 1,243 m3 was below the lower volume limit of 1,468 m3
5	Invalid sample	Nov 6	Sample was not taken due to power outage at facility.

Address: Rainy River Mine

Station Name: Northwest Station

Station Location: North-west of the Site at Tailings Management Area

Measurement Instrument: PQ200 Sampler

Start Date: October 1, 2021

End Date: December 30, 2021

#	Action	Date	Reason
1	Invalid sample	October 13	Sample volume of 1,425 m3 was below the lower volume limit of 1,468 m3.

APPENDIX E-2: RESPIRABLE PARTICULATE MATTER SAMPLE EDIT LOG

Emitter: New Gold Inc.

Address: Rainy River Mine

Station Name: Tait Road Station

Station Location: Near McMillan Road along the realigned Highway 600

Pollutant/Parameter: Respirable Particulate Matter ($PM_{2.5}$)

Measurement Instrument: PQ200 Sampler

Start Date: October 1, 2021

End Date: December 30, 2021

#	Action	Date	Reason

Emitter: New Gold Inc.

Address: Rainy River Mine

Station Name: Gallinger Road Station

Station Location: North-east of the Site along Gallinger Road

Pollutant/Parameter: Respirable Particulate Matter ($PM_{2.5}$)

Measurement Instrument: PQ200 Sampler

Start Date: October 1, 2021

End Date: December 30, 2021

#	Action	Date	Reason
1			

Emitter: New Gold Inc.

Address: Rainy River Mine

Station Name: Northwest Station

Station Location: North-west of the Site at Tailings Management Area

Pollutant/Parameter: Respirable Particulate Matter ($PM_{2.5}$)

Measurement Instrument: PQ200 Sampler

Start Date: October 1, 2021

End Date: December 30, 2021

#	Action	Date	Reason

APPENDIX E-3: DUSTFALL SAMPLE EDIT LOG

Emitter: New Gold Inc.

Address: Rainy River Mine

Station Name: Northwest Station

Station Location: North-west of the Site at Tailings Management Area

Pollutant/Parameter: Dustfall

Measurement Instrument: Passive Sampler Jar

Start Date: October 1, 2021

End Date: December 30, 2021

#	Action	Date	Reason

APPENDIX F:
MECP AUDIT

NOT APPLICABLE IN Q4 2021

NEW GOLD RAINY RIVER MINE
APPENDIX E.2
ESDM REPORT

2020 EMISSION SUMMARY AND DISPERSION MODELLING REPORT

newgold™ Rainy River Project

Environmental Compliance Approval (Air) with Limited Operational Flexibility No. 0412-A2LR4V

New Gold | Rainy River Mine

Prepared By:
Caleb Stuckless – Associate Consultant
Karina E Kenigsberg, P. Eng. – Senior Consultant

TRINITY CONSULTANTS ONTARIO
885 Don Mills Road, Suite 106
Toronto, Ontario
M3C 1V9
(416) 391-2527

CURRENT AS OF April 30, 2021

April 30, 2021

Project 217201.0140

Trinity Consultants

Ontario

Ministry of the Environment, Conservation and Parks

Emission Summary and Dispersion Modelling Report Checklist

Company Name

New Gold Inc. - Rainy River Mine

Company Address

Unit Number	Street Number	Street Name	PO Box
	1361	Roen Road	

City/Town	Province	Postal Code
Chapple	Ontario	P0W 1A0

Location of Facility

The attached Emission Summary and Dispersion Modeling Report was prepared in accordance with s. 26 of O. Reg. 419/05 and the guidance in the MECP document "Procedure for Preparing an Emission Summary and Dispersion Modelling Report" dated March 2009 and "Air Dispersion Modelling Guideline for Ontario" dated March 2009 and the minimum required information identified in the check-list on the reverse of this sheet has been submitted.

Company Contact

Company Contact

Company Contact Name

Last Name	First Name	Middle Initial
Cornell	Garnet	

Title	Telephone Number
Environment Superintendent	807-234-8170

Signature	Date (yyyy/mm/dd)
	2021/04/29

Technical Contact

Technical Contact

Technical Contact Name

Last Name	First Name	Middle Initial
Kenigsberg	Karina	E

Representing	Telephone Number
Trinity Consultants Ontario Inc.	416-391-2527

Signature	Date (yyyy/mm/dd)
Karina E Kenigsberg	2021/04/29

© Queen's Printer for Ontario, 2021

* This checklist is taken from the document titled "Procedure for Preparing an Emission Summary and Dispersion Modelling Report" dated March 2009.

Emission Summary and Dispersion Modelling Report Checklist

	Required Information	Submitted	Explanation/Reference
	Executive Summary and Emission Summary Table		
	1.1 Overview of ESDM Report	☑ Yes	Executive Summary
	1.2 Emission Summary Table	☑ Yes	Executive Summary
1.0	**Introduction and Facility Description**		
	1.1 Purpose and Scope of ESDM Report (when report only represents a portion of facility)	☑ Yes	Section 1 ESDM Report
	1.2 Description of Processes and NAICS code(s)	☑ Yes	Section 1 ESDM Report
	1.3 Description of Products and Raw Materials	☑ Yes	Section 1 ESDM Report
	1.4 Process Flow Diagram	☑ Yes	Section 1 ESDM Report
	1.5 Operating Schedule	☑ Yes	Section 1 ESDM Report
2.0	**Initial Identification of Sources and Contaminants**		
	2.1 Sources and Contaminants Identification Table	☑ Yes	Section 2 ESDM Report
3.0	**Assessment of the Significance of Contaminants and Sources**		
	3.1 Identification of Negligible Contaminants and Sources	☑ Yes	Section 3 ESDM Report
	3.2 Rationale for Assessment	☑ Yes	Section 3 ESDM Report
4.0	**Operating Conditions, Emission Rate Estimating and Data Quality**		
	4.1 Description of operating conditions, for each significant contaminant that results in the maximum POI concentration for that contaminant	☑ Yes	Section 4 ESDM Report
	4.2 Explanation of Method used to calculate the emission rate for each contaminant	☑ Yes	Section 4 ESDM Report
	4.3 Sample calculation for each method	☑ Yes	Section 4 ESDM Report
	4.4 Assessment of Data Quality for each emission rate	☑ Yes	Section 4 ESDM Report
5.0	**Source Summary Table and Property Plan**		
	5.1 Source Summary Table	☑ Yes	Section 5 ESDM Report
	5.2 Site Plan (scalable)	☑ Yes	Section 5 ESDM Report
6.0	**Dispersion Modelling**		
	6.1 Dispersion Modelling Input Summary Table	☑ Yes	Section 6 ESDM Report
	6.2 Land Use Zoning Designation Plan	☑ Yes	Section 6 ESDM Report
	6.3 Dispersion Modelling Input and Output Files	☑ Yes	Section 6 ESDM Report
7.0	**Emission Summary Table and Conclusions**		
	7.1 Emission Summary Table	☑ Yes	Exec. Summary, Section 7
	7.2 Assessment of Contaminants with no MECP POI Limits	☑ Yes	Section 7 ESDM Report
	7.3 Conclusions	☑ Yes	Section 7 ESDM Report
	Appendices (Provide supporting information or details such as…)		
	Site Plan, Process Flow Diagram	☑ Yes	Appendices A, B
	Summary Tables, Modelling Results	☑ Yes	Appendices C, D
	Calculations, Supporting Info, Acoustic Assessment	☑ Yes	Appendices E, F, G

 © Queen's Printer for Ontario, 2021

New Gold - Rainy River Mine
AMENDED ENVIRONMENTAL COMPLIANCE APPROVAL NUMBER 0412-A2LR4V Issue Date: September 24, 2015
ESDM Modifications Log

Modification	Date Changed	Description of Change	Emission Summary and Dispersion Modelling Report Changes
Blast Alarm (used to notify the opertors of a blast)	2020	A blast alarm was added to notify operators of blasts.	None
Calcium chloride system installed for treating the ore feeding the crushed ore stockpile during winter months: reduces dust emmisions and prevents frost from generating In the stockpile	Q1 2020	2 holding tanks + pumping skid hooked into water dust suppression system utilized in summer months	The emission factor SPM emissions for material handling of aggregate has been updated to reflect the implementation.
Operating variable number of leach tanks. Ran between 4 and 8 tanks over the course of the year. Will likely settle out at 5 or 6 in 2021	2020	Reducing number of leach tanks based on retention time requirements: Reduces noise levels with reduced tank	Performed emissions estimations to reflect case where 8 leach tanks were in use (worst-case scenario). AERMOD model contains all 8 leach tanks.
Mobile crusher moved to the EMRS and reduced crushing volume per day	2020	Mobile crusher has been moved to the EMRS area and the daily crushing volume has been reduced.	Updated emission estimation to reflect reduced crushing rate and moved source to the EMRS.
Increased loading fleet size to include CAT994 Loader.	Q2 2020	Use of Caterpillar 994 as part of the mining fleet.	Increased fleet operations reflected in construction haul road emissions estimate.
Development of the underground mine began in the second half of 2018 and continued through the first half of 2019. Development restarted in Q3	Q3 2020	Mine development restarted in 2020.	Construction operations have been reflected in the haul road emissions estimate.
Concrete batching plant decommissioned in 2020.	2020	Concrete batching plant decommisisoned in 2020.	Removed concrete batching operations emissions estimates.
Pinewood Generator removed in 2020.	2020	Removed Pinewood Generator from facility.	Removed source from combustion emissions estimates and removed source from AERMOD model.
Added a mobile crusher.	Q1 2021	Mobile crusher added at the EMRS/LGO area.	The source has been added to the ESDM calculations and the model has been updated accordingly.

EXECUTIVE SUMMARY

This Emission Summary and Dispersion Modelling (ESDM) Report was prepared to fulfill the requirements of Condition 4.1(a) of New Gold's Rainy River Mine (RRM) Amended Environmental Compliance Approval (ECA) No 0412-A2LR4V. The RRM operations are in the southern half of Richardson Township, approximately 50 kilometres (km) northwest of Fort Frances in northwestern Ontario (the Site). This ESDM report has been prepared to show that the Site demonstrates compliance with Ontario Regulation 419/05: Air Pollution – Local Air Quality (the Regulation). In addition, guidance was followed in the Ontario Ministry of Environment, Conservation and Parks (MECP) publication "Procedure for Preparing an Emission Summary and Dispersion Modelling Report, Guideline A-10" Version 4.1 dated March 2018 (ESDM Procedure Document), as appropriate.

The Site operates under the primary NAICS code 21222—Gold and silver ore mining—which is listed as a Schedule 4 Target Sector in the Regulation and, therefore, is required to show compliance with Schedule 3 Standards and Guidelines.

The maximum projected ten (10)-year production rate for the Site is 32,400 tonnes of ore processed per day. The mine is projected to operate until 2028 with the Open Pit being operated until 2025 and Underground operations continuing until 2028. The mine currently employs 850 people with roughly 70% from local districts and just under 30% self-identifying as Indigenous.

The Site's actual separation distance from the property line to the nearest sensitive receptor for noise and vibration is less than the minimum required separation distance calculated using the Primary Screening Method. Therefore, an acoustic/vibration assessment report and noise mitigation plan are provided in Appendix G.

The maximum emission rates from the significant sources were calculated in accordance with s.11 of the Regulation and the data quality assessed follows the process outlined in the ESDM Procedure Document.

A point of impingement (POI) concentration for the significant contaminants emitted from the Site was determined based on the estimated emission rates and the output from the approved dispersion model. The results are presented in the Emission Summary Table (EST) in accordance with s.26 of the Regulation.

New Gold is compliant with the Conditions in the ECA and standards in O. Reg. 419/05 as of April 30, 2020.

Emission Summary and Dispersion Modelling Report
New Gold - Rainy River Mine
Emission Summary Table

Contaminant Name	CAS RN	Total Facility Emission Rate (g/s)	Air Dispersion Model Used	Maximum POI Concentration (µg/m^3)	Averaging Period (hours)	Ministry POI Limit (µg/m^3)	Limiting Effect	Regulation Source	Percentage of Ministry POI Limit
Aluminum	7429-90-5	3.85E-01	AERMOD	2.19E+00	24	12	Health	SL-JSL	18.3%
Ammonia	7664-41-7	7.54E-02	AERMOD	1.41E-01	24	100	Health	Standard	0.1%
Arsenic and compounds	7440-38-2	7.71E-04	AERMOD	4.38E-03	24	0.3	Health	Guideline	1.5%
Barium - total water soluble	7440-39-3	1.78E-03	AERMOD	1.01E-02	24	10	Health	Guideline	0.1%
Beryllium and Beryllium Compounds	7440-41-7	1.11E-05	AERMOD	6.33E-05	24	0.01	Health	Standard	0.6%
Cadmium and Cadmium Compounds	7440-43-9	1.00E-04	AERMOD	5.69E-04	24	0.025	Health	Standard	2.3%
Calcium carbonate	471-34-1	2.87E-01	AERMOD v.19191	1.64E+00	24	15	Health & Particulate	SL-JSL	10.9%
Carbon monoxide	630-08-0	1.87E+01	AERMOD	1.27E+03	0.5	6000	Health	Standard	21.2%
Cesium	7440-46-2	4.06E-05	AERMOD	2.31E-04	N/A				
Chromium compounds (metallic, divalent and trivalent forms)	7440-47-3	2.03E-03	AERMOD v.19191	1.15E-02	24	0.5	Health	Standard	2.3%
Cobalt	7440-48-4	2.45E-04	AERMOD	1.39E-03	24	0.1	Health	Guideline	1.4%
Copper sulphate	7758-99-8	6.00E-03	AERMOD	1.08E-02	N/A				
Gallium	7440-55-3	5.56E-05	AERMOD	3.16E-04	N/A				
Hydrogen cyanide	74-90-8	2.20E-01	AERMOD	7.88E-01	24	8	Health	Standard	9.9%
Iron (metallic)	7439-89-6	4.63E-01	AERMOD	2.63E+00	24	4	Health	Standard	65.9%
Lanthanum	7439-91-0	2.56E-04	AERMOD	1.46E-03	N/A				
Lead and Lead Compounds	7439-92-1	1.21E-03	AERMOD	6.88E-03	24	0.5	Health	Standard	1.4%
Lead and Lead Compounds	7439-92-1	1.21E-03	AERMOD	1.33E-03	720	0.2	Health	Standard	0.7%
Magnesium	7439-95-4	1.58E-01	AERMOD	8.98E-01	24	72	Health	SL-MD	1.2%
Manganese and manganese compounds	7439-96-5	8.95E-03	AERMOD	5.09E-02	24	0.4	Health	Standard	12.7%
Nickel and nickel compounds	7440-02-0	6.39E-04	AERMOD	2.26E-04	8760	0.04	Health	Standard	0.6%
Nitrogen oxides	10102-44-0	6.66E+00	AERMOD	3.61E+02	1	400	Health	Standard	90.1%
Nitrogen oxides	10102-44-0	3.39E+00	AERMOD	1.15E+01	24	200	Health	Standard	5.8%
Phosphorus	7723-14-0	4.45E-03	AERMOD	2.53E-02	24	0.5	Health	SL-MD	5.1%
Potassium	7440-09-7	1.07E-01	AERMOD	6.10E-01	24	1	Health	SL-JSL	61.0%
Rhenium	7440-15-5	2.78E-05	AERMOD	1.58E-04	N/A				
Scandium	7440-20-2	1.00E-04	AERMOD	5.69E-04	N/A				
Silica (<10 µm diameter)	14808-60-7	1.33E-01	AERMOD	5.62E-01	24	5	Health	Guideline	11.2%
Sodium	7440-23-5	1.78E-02	AERMOD	1.01E-01	N/A				
Sulphur dioxide	7446-09-5	5.48E+00	AERMOD v.19191	2.23E+02	1	609	Health & Vegetation	Standard	36.6%
Sulphur dioxide	7446-09-5	4.93E+00	AERMOD v.19191	1.77E+01	24	275	Health & Vegetation	Standard	6.4%
Suspended particulate matter	N/A-TSP	1.35E+01	AERMOD	7.93E+01	24	120	Visibility	Standard	66.1%
Thallium	7440-28-0	5.56E-05	AERMOD	3.16E-04	24	0.5	Health	SL-JSL	0.1%
Thorium	7440-29-1	1.11E-04	AERMOD	6.33E-04	N/A				
Titanium	7440-32-6	2.34E-02	AERMOD	1.33E-01	24	120	Particulate	Standard	0.1%
Uranium and Uranium Compounds - U in PM10	7440-61-1	1.11E-04	AERMOD v.19191	3.94E-05	8760	0.03	Health	Standard	0.1%
Vanadium	7440-62-2	8.89E-04	AERMOD	5.06E-03	24	2	Health	Standard	0.3%
Zinc	7440-66-6	1.42E-02	AERMOD	8.07E-02	24	120	Particulate	Standard	0.1%
Zirconium	7440-67-7	1.42E-02	AERMOD	8.07E-02	24	25	Health	SL-JSL	0.3%

TABLE OF CONTENTS

1. INTRODUCTION 1-1
   1.1 Purpose and Scope of Environmental Activity Sector Registry (EASR) ESDM Report 1-1
   1.2 Description of Processes and NAICS Code(s) 1-1
   1.3 Description of Products and Raw Materials 1-2
   1.4 Process Flow Diagram 1-2
   1.5 Operating Schedule 1-2
   1.6 Facility Production Limit 1-2

2. INITIAL IDENTIFICATION OF SOURCES AND CONTAMINANTS 2-1
   2.1 Sources and Contaminants Identification Table 2-1

3. ASSESSMENT OF THE SIGNIFICANCE OF CONTAMINANTS AND SOURCES 3-1
   3.1 Identification of Negligible Sources and Contaminants 3-1
   3.2 Rationale for Assessment 3-1

4. OPERATING CONDITIONS, EMISSION ESTIMATING, AND DATA QUALITY 4-1
   4.1 Description Of Operating Conditions 4-1
   4.2 Explanation Of The Methods Used To Calculate Emission Rates 4-1
   4.3 Supporting Calculations 4-1
   4.4 Assessment Of Data Quality 4-2

5. SOURCE SUMMARY TABLE AND SITE PLAN 5-1
   5.1 Source Summary Table 5-1
   5.2 Site Plan 5-1

6. AIR DISPERSION MODELLING 6-1
   6.1 Dispersion Modelling Input Summary Table 6-1
   6.2 Land Use Zoning Designation Plan and Regional Meteorological Data 6-2
   6.3 Terrain Data 6-2
   6.4 Coordinate System 6-2
   6.5 Building Downwash 6-3
   6.6 Deposition 6-3
   6.7 Averaging Time and Conversions 6-3
   6.8 Area of Modelling Coverage 6-3
   6.9 Dispersion Modelling Input and Output Files 6-3

7. EMISSION SUMMARY TABLE AND CONCLUSIONS 7-1
   7.1 Emission Summary Table 7-1
   7.2 Conclusions 7-1

APPENDIX A. SITE PLAN A

APPENDIX B. PROCESS FLOW DIAGRAM B

APPENDIX C. SUMMARY TABLES C

APPENDIX D. AIR DISPERSION MODELLING FILES D

APPENDIX E. SUPPORTING CALCULATIONS E

APPENDIX F. OTHER SUPPORTING DOCUMENTATION F

APPENDIX G. ACOUSTIC ASSESSMENT G

1. INTRODUCTION

1.1 Purpose and Scope of Environmental Activity Sector Registry (EASR) ESDM Report

This Emission Summary and Dispersion Modelling (ESDM) Report was prepared to fulfill the requirements of Condition 4.1(a) of New Gold's Rainy River Mine (RRM) Amended Environmental Compliance Approval (ECA) No 0412-A2LR4V. The RRM operations are in the southern half of Richardson Township, approximately 50 kilometres (km) northwest of Fort Frances in northwestern Ontario (the Site). This ESDM report has been prepared to show that the Site demonstrates compliance with *Ontario Regulation 419/05: Air Pollution – Local Air Quality* (the Regulation). In addition, guidance was followed in the Ontario Ministry of Environment, Conservation and Parks (MECP) publication "Procedure for Preparing an Emission Summary and Dispersion Modelling Report, Guideline A-10" Version 4.1 dated March 2018 (ESDM Procedure Document), as appropriate.

The Rainy River Mine (RRM) began processing ore on September 14, 2017 and completed its first gold pour on October 5, 2017. Commercial production began on October 19, 2017. Development of the underground mine began in the second half of 2018. The Site and surrounding lands are predominately privately held, with New Gold holding a considerable private land package. New Gold has been exploring the property since 2015 when it was purchased from Rainy River Resources and is now operating an open pit mine, underground gold mine, and milling complex on the site.

The site plan is provided in **Appendix A**.

1.2 Description of Processes and NAICS Code(s)

Drilling, blasting, and material movement occur at the open pit and underground mine. Mined ore is transported to the processing plant for gold extraction using the carbon-in-pulp (CIP) extraction process. The main processes at the Site include the following:

- Open pit and underground mine;
- Ore processing plant with primary crusher;
- Maintenance shop, warehouse, and administration complex;
- Explosives manufacturing and storage facilities;
- Stockpiles (overburden, low-grade ore, and mine rock);
- Aggregate extraction;
- Tailings management area (TMA);
- Onsite access roads and pipelines, power infrastructure and fuel storage facilities;
- Domestic and industrial waste handling;
- Water management facilities and drainage works, including watercourse diversions; and
- Transmission line.

The maximum projected ten (10)-year production rate for the Site is 32,400 tonnes of ore processed per day. The mine is projected to operate until 2028 with the Open Pit being operated until 2025 and Underground operations continuing until 2028. The mine currently employs 850 people with roughly 70% from local districts and just under 30% self-identifying as Indigenous.

The Site operates under the primary NAICS code 21222 - Gold and silver ore mining, which is listed in Schedule 4 Target Sector and therefore is required to show compliance with Schedule 3 Standards and Guidelines.

1.3 Description of Products and Raw Materials

New Gold operates an open pit, underground gold mine, and ore processing designed to produce 325,000 ounces of gold annually.

1.4 Process Flow Diagram

The process flow diagram for the operations is included in **Appendix B**.

1.5 Operating Schedule

The Site operates 24 hours per day (h/d), seven (7) days per week (d/wk).

1.6 Facility Production Limit

The maximum ore throughput is 9,855 kilotonnes (kt) per year. To achieve the annual production rate, daily ore processing rates vary due to scheduled maintenance activities but do not exceed 32,400 tonnes per day.

2. INITIAL IDENTIFICATION OF SOURCES AND CONTAMINANTS

2.1 Sources and Contaminants Identification Table

All emission sources at the Site, and the expected contaminants emitted from each source, are identified in **Appendix C**. Each of the identified sources has been assigned a source reference number (Source ID). This table provides the information required by sub-paragraphs 2 to 4 of s.26(1) of the Regulation.

The location of the discharges from each significant source is presented in the Dispersion Modelling Plan in **Appendix D**. The location of each source is specified with the source reference number. Only significant sources were modelled and, therefore, only significant sources are represented.

3. ASSESSMENT OF THE SIGNIFICANCE OF CONTAMINANTS AND SOURCES

In accordance with s.8 of the Regulation, emission rate calculations and dispersion modelling do not have to be performed for emissions from negligible sources or for the emission of negligible contaminants from significant sources.

Below is an explanation for each source and contaminant identified as negligible in the Sources and Contaminants Identification Table, as required by subparagraph 5 of s.26(1) of the Regulation.

3.1 Identification of Negligible Sources and Contaminants

Of the sources listed in the Sources and Contaminants Identification Table provided in **Appendix C**, some sources have been identified as insignificant. As required by paragraph 3 of s.26(1) of the Regulation, an explanation of how it was determined that each source of contaminant discharges a negligible amount of the contaminant is provided.

For example, maintenance welding emissions are exempt pursuant to Table B-3 of the ESDM Procedure Document. Only the sources identified as significant were included in the dispersion modelling for the site. Negligible emission calculations are provided in **Appendix E**.

3.2 Rationale for Assessment

For each source or contaminant listed in **Appendix C** that has been identified as negligible, there is an accompanying documented rationale. For example, the rationale for deeming natural gas-fired combustion equipment as negligible is listed in Table B-3 of the ESDM Procedure Document. The technical information required to substantiate the argument that each of the identified sources is negligible is presented in **Appendix E**.

Only significant contaminants were assessed in the AERMOD model.

4. OPERATING CONDITIONS, EMISSION ESTIMATING, AND DATA QUALITY

This section provides a description of the operating conditions used in the calculation of the emission estimates and an assessment of the data quality of the emission estimates for each contaminant from the Site as required by sub paragraphs 6 and 7 of s.26(1) of the Regulation. In accordance with s.8 of the Regulation, emission rate calculations and dispersion modelling do not have to be performed for emissions from negligible sources or for the emission of negligible contaminants from significant sources.

4.1 Description Of Operating Conditions

Paragraph 1 of subsection 10(1) of the Regulation states that the approved dispersion model must be used with operating conditions that result in the maximum point of impingement (POI) concentration for each significant contaminant, according to the averaging period for the relevant MECP POI Limit corresponding to that contaminant. The operating condition that corresponds to the maximum POI concentration may occur when the Site is operating at its maximum production level, at a lower production level, or when processes are in transition.

In preparing this ESDM Report, all operating scenarios for all the significant sources were assessed for the contaminants that are relevant to the current process operations. For each significant contaminant, and according to the averaging period for the relevant POI Limit corresponding to that contaminant, the operating scenario used that results in the maximum POI concentration is the scenario where all significant sources are operating simultaneously at their individual maximum rates of production.

In accordance with paragraph 6 of s.26(1) of the Regulation, **Appendix E** includes a description of the operating conditions for each contaminant that is emitted in significant amounts. Also included is a description of the operating conditions of the significant sources that result in the maximum POI concentration for the contaminant, ensuring that the operating conditions correspond to the averaging period of the MECP POI Limit(s).

More detailed operating conditions, emissions estimate, and data quality considerations are provided in **Appendix E**.

4.2 Explanation Of The Methods Used To Calculate Emission Rates

The maximum emission rates emitted from the significant sources were calculated in accordance with requirements of the ESDM Procedure Document.

The emission rate for each significant contaminant emitted from a significant source was estimated and is presented in the Source Summary Table in **Appendix C**, along with the methodology for the calculation. Further explanation is provided in **Appendix E**.

4.3 Supporting Calculations

The technical rationale necessary to substantiate the emission rates in the Source Summary Table, including sample calculations, is presented in **Appendix E**.

4.4 Assessment Of Data Quality

This section provides a description of the assessment of the data quality of the emission estimates for each significant contaminant from the facility, as required by subparagraph 7(iii) of s.26(1) of the Regulation.

As an example, the emissions of natural gas combustion products from comfort heaters were estimated based on the maximum heat input of the equipment and United States Environmental Protection Agency (EPA) AP-42 emission factors. Therefore, the estimated emission rates are not likely to underestimate the actual emissions rates, and the use of these estimated emission rates will likely result in a predicted POI concentration greater than the actual concentration.

For each contaminant, the emission rate was estimated and the data quality for the estimate is documented in the Source Summary Table in **Appendix C**. The assessment of data quality for each source listed in the Source Summary Table is documented in **Appendix E**.

5. SOURCE SUMMARY TABLE AND SITE PLAN

This section provides the table required by sub paragraph 8 and the site plan required by sub paragraph 9 of s.26(1) of the Regulation.

5.1 Source Summary Table

The emission rate estimates for all significant contaminants are documented in the Source Summary Table provided in **Appendix C**, in accordance with the requirements of sub paragraph 8 of s.26(1) of the Regulation.

5.2 Site Plan

The locations of the emission sources listed in the Source Summary Table are presented in the Dispersion Modelling Plan in **Appendix D**. The location of each of the sources is specified with the source reference number. The location of the property line is indicated with the end points of each section of the property-line clearly referenced using the Universal Transverse Mercator (UTM) coordinate system. The location of each source is referenced in the UTM coordinate system under a column in the Source Summary Table.

6. AIR DISPERSION MODELLING

This section provides a description of how the dispersion modelling was completed to predict the maximum POI concentrations, as required by sub paragraphs 10 to 13 of s.26(1) of the Regulation.

The Site is subject to s.20 of the Regulation. Therefore, the modelled impact of contaminant emissions has been assessed using the U.S. EPA AERMOD model.

Dispersion modelling was completed in accordance with the MECP's "Air Dispersion Modelling Guideline for Ontario, Version 3.0" dated March 2018 (the ADMGO). A general description of the input data used in the dispersion model is provided below and summarized in **Table 6-1** below.

The AERMOD modelling system has been identified by the MECP as one of the approved dispersion models under the Regulation. The model includes the Plume Rise Model Enhancements (PRIME) algorithms for assessing the effects of buildings on air dispersion.

The use of a refined model, such as AERMOD, is necessary when assessing air quality against Schedule 3 Standards. It is also applicable to rural and urban areas, flat and complex terrain, surface and elevated releases, and multiple sources (including point, area, and volume sources).

The AERMOD modelling system is made up of the AERMOD dispersion model, the AERMET meteorological pre-processor, and the AERMAP terrain pre-processor.

The following approved dispersion model and pre-processors were used in the assessment:

- AERMOD dispersion model version 19191;
- AERMAP surface pre-processor; and
- BPIP building downwash pre-processor.

6.1 Dispersion Modelling Input Summary Table

The AERMOD (version 19191) dispersion model was used to predict the maximum POI concentrations of substances emitted from the Site at the Site boundary. The dispersion modelling input and output files are attached in **Appendix D**. The Dispersion Modelling Input Summary Table, shown below, describes the dispersion modelling input parameters.

Table 6-1. Dispersion Modelling Input Summary Table

Relevant Section of the Regulation	Section Title	Description of How the Approved Dispersion Model was Used
Section 6	Approved Dispersion Models	AERMOD (version 19191)
Section 8	Negligible Sources	Refer to Section 3
Section 9	Same Structure Contamination	Not Applicable
Section 10	Operating Conditions	Refer to Section 4.1
Section 11	Source of Contaminant Emission Rates	Refer to Appendix E
Section 12	Combined Effects of Assumptions for Operating Conditions and Emission Rates	Refer to the Emission Summary Table in Appendix C
Section 13	Meteorological Conditions	Refer to Section 6.2

Relevant Section of the Regulation	Section Title	Description of How the Approved Dispersion Model was Used
Section 14	Area of Modelling Coverage	25 km radius
Section 15	Stack Height for Certain New Sources of Contaminant	Not Applicable
Section 16	Terrain Data	Refer to Section 6.3
Section 17	Averaging Period	Refer to Section

6.2 Land Use Zoning Designation Plan and Regional Meteorological Data

The Site is in the southern half of Richardson Township, approximately 50 kilometres (km) northwest of Fort Frances in northwestern Ontario, Canada. Regional population centres, Kenora and Thunder Bay, lie 162 km to the north and 415 km to the east, respectively. Access to the Site is via secondary all-weather roads branching off Trans-Canada Highways 11 and 71. An east-west rail line is located 21 km to the south, populated by several small towns and villages.

The RRM occupies approximately 6,077 hectares, comprising 210 patented mining rights, surface rights, and Crown Lease properties, as well as 1,156 unpatented claims. In addition, New Gold has a land package of approximately 36,762 hectares surrounding the mine site, including patented mining rights and/or surface rights and unpatented claims. Refer to **Appendix A**.

The land use characteristics in the 25 km radius surrounding the Site predominantly consists of rural land uses. Therefore, the meteorological data processed by the MECP using AERMET version 19191 for “RURAL” land use was used for AERMOD dispersion modelling.

Regional pre-processed model ready data for AERMOD was obtained from the MECP website. The “North_1_Crops” data set, for the “CROPS” category is the most representative data set for the Site.

The maximum predicted concentration reported is representative from the associated year of meteorological data. For illustration, contour plots are provided in **Appendix D**, which includes the year with the maximum concentration.

All modelling files, including AERMOD input and output files, meteorology files, and terrain data, have been included in **Appendix D** for reference.

6.3 Terrain Data

Digital elevation model (DEM) data was obtained from the MECP website and processed using the AERMOD terrain processor, AERMAP. Based on the 25 km radius surrounding the Facility, the ‘cdem_dem_052D_tif’ DEM files were the selected data set.

6.4 Coordinate System

The Universal Transverse Mercator (UTM) coordinate system was used to specify model object sources and receptors. All coordinates were defined in the North American Datum of 1983 (NAD83).

6.5 Building Downwash

On-site buildings and structures were entered into the model using the US EPA Building Profile Input Program (BPIP).

6.6 Deposition

The deposition algorithm in the AERMOD model was not used for this assessment and, therefore, the predicted modelled POI concentrations are conservative.

6.7 Averaging Time and Conversions

The contaminant Standards (i.e., Schedule 3) and Guidelines are based on variable averaging periods (often, 24-hours). The AERMOD output was compared directly to the applicable standard and averaging period. Where necessary, the output from the AERMOD model was converted to alternate averaging periods using the methodology given in Table 7-1 of the ESDM Procedure Document.

6.8 Area of Modelling Coverage

A tiered receptor grid was defined starting with a rectangular boundary that enclosed all the modelled sources. The receptor spacing is given in **Table 6-2**.

Table 6-2. Receptor Grid Spacing

Tier	Distance from Sources of Contaminant	Receptor Spacing
1	At Property Line	10 m
2	Property Line – 200 m	20 m
3	200 m – 500 m	50 m
4	500 m – 1,000 m	100 m
5	1,000 m – 2,000 m	200 m
6	2,000 m – 5,000 m	500 m
7	> 5,000 m	1,000 m

6.9 Dispersion Modelling Input and Output Files

The summary of the AERMOD dispersion model inputs and outputs are provided in **Appendix D**.

7. EMISSION SUMMARY TABLE AND CONCLUSIONS

7.1 Emission Summary Table

A POI concentration for the significant contaminants emitted from the Site was calculated based on the emission rates from the significant sources and the output from the approved dispersion model. The results are presented in Emission Summary Table provided in **Appendix C**.

7.2 Conclusions

Only the significant sources were assessed with AERMOD after completing the emission threshold determination.

The maximum emission rates from the significant sources were calculated in accordance with s.11 of the Regulation, and the data quality assessment follows the process outlined in the ESDM Procedure Document.

A POI concentration for each significant contaminant emitted from the Site was determined based on the calculated emission rates and the output from the approved dispersion model. The results are presented in the Emission Summary Table in **Appendix C** in accordance with s.26 of the Regulation. The results indicate the Facility complies with the Standards and Guidelines in the Regulation.

APPENDIX A. SITE PLAN

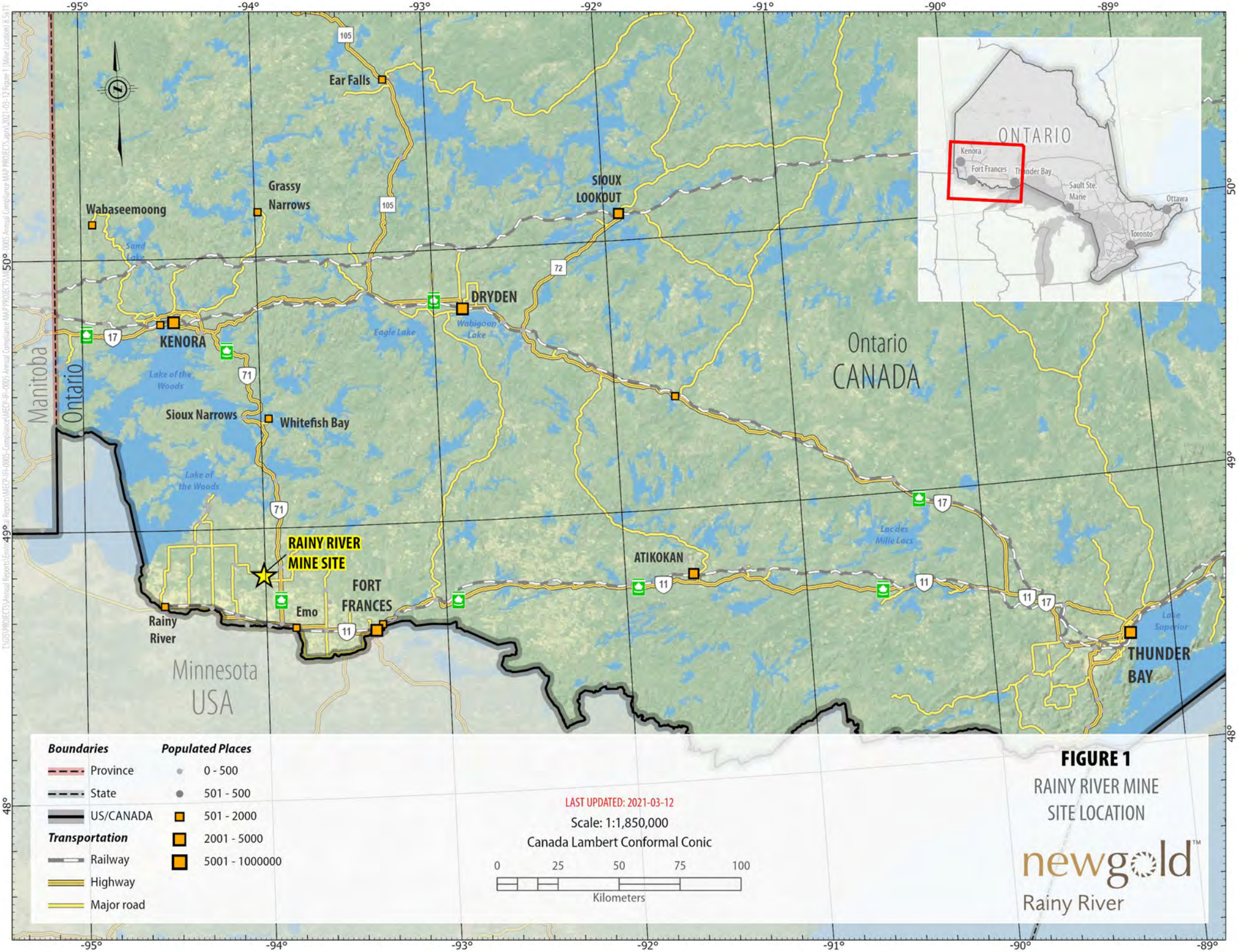

FIGURE 1
RAINY RIVER MINE SITE LOCATION

TOWNSHIP OF CHAPPLE

ZONING BY-LAW SCHEDULE A

Council Adoption October 8, 2013

Village Settlement Area
Zone Boundary
A - Agricultural Zone
RU - Rural Zone
C1 - Highway Commercial Zone
I - Institutional
M1 - Industrial Zone
MX - Aggregate Extraction Zone
WD - Waste Disposal Zone
OS - Open Space Zone
CEP - Conservation and Environmental Protection Zone

Transportation
Provincial Highway
Township Roads
CN Railway

Watercourses

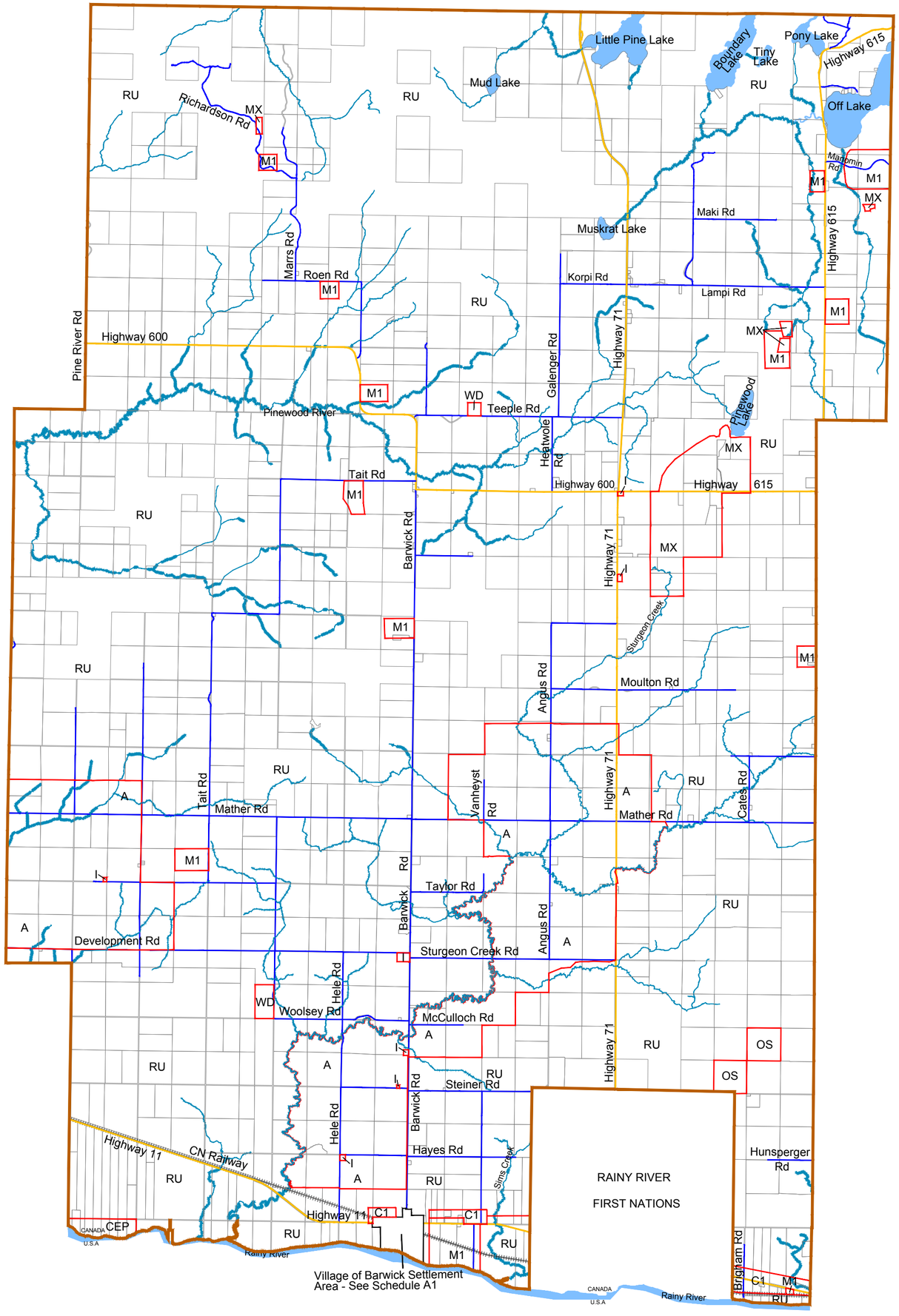

FOTENN PLANNING & URBAN DESIGN

Digital Map Created By:

CGIS Spatial Solutions
52 South Street
Perth, ON K7H 2G7
TEL: 613-368-4321
www.cgis.com

500m 1000m 1500m 2000m 2500m

Note: The base information on this plan was prepared from a variety of map sources and was used by permission of the Township of Chapple. It is not a legal plan of survey. For precise location of plan features recourse should be had to the original source data.

Figure 1
RICHARDSON
TMAHR
600
Dearlock
RAINY
RIVER MINE
OB&NPAG_HR
ORE_MILLHR
INPITHR
LG&PAG_HR
PAG_HR
Pinewood River
Black
Hawk
0
500
1,000
2,000
m
newgold
Rainy River
GIS TEAM, THUNDER BAY
Exported from Web GIS 3/15/2021 10:06 AM

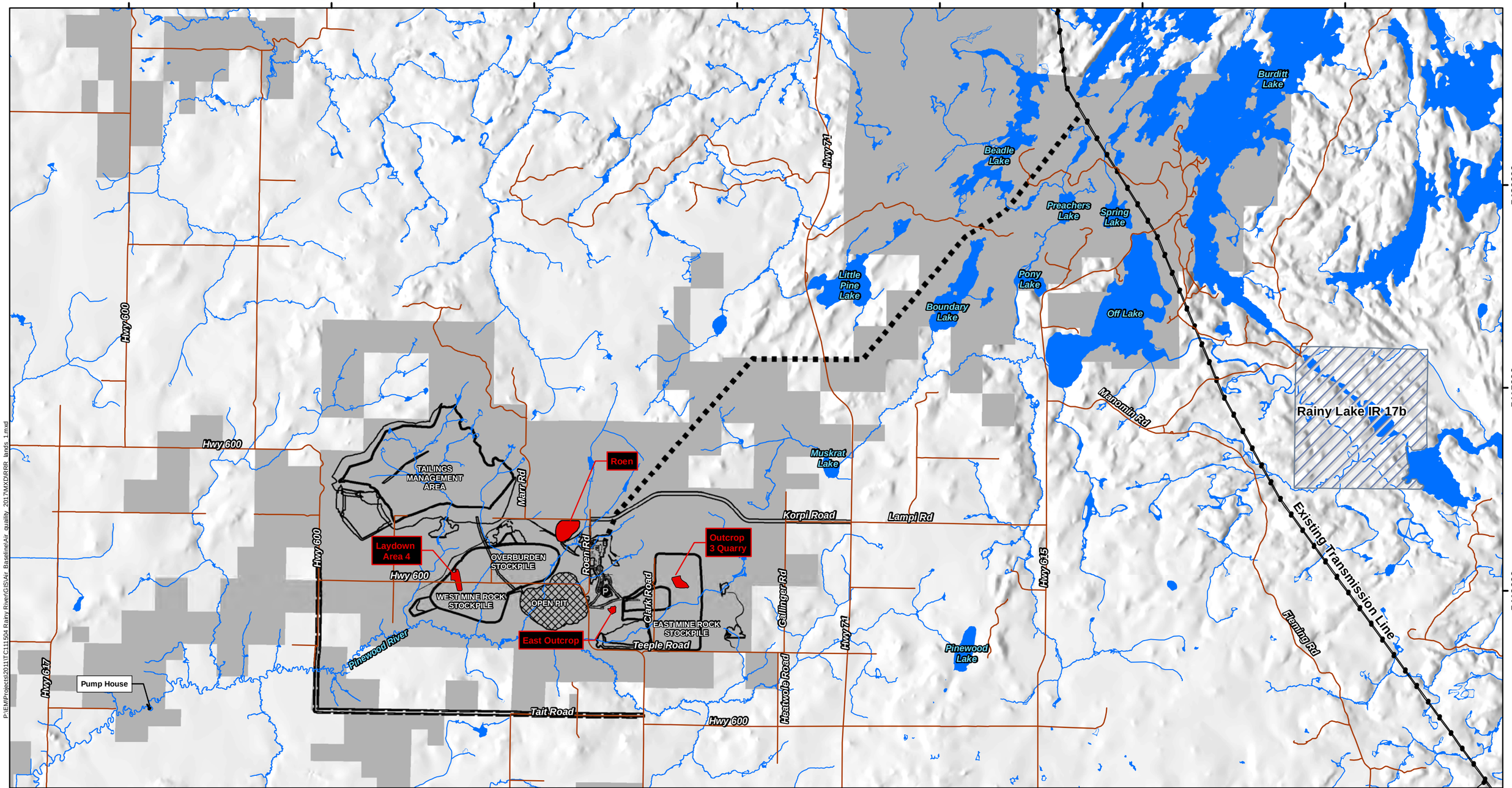

LEGEND

Site Features

- Underground Portal
- Open Pit
- Mine Site Infrastructure
- Site Roads
- Aggregate Pit / Quarry (labelled with name)
- RRP-NG Property Boundary
- Roads
- Existing Transmission Line
- First Nation Land

0 4 8 16 24 Kilometres

NOTES:
- Road and Utility data and topographic data extracted from Land Information Ontario, Ontario Road Network, MNR Queen's Printer for Ontario, 2011-2012
- Land tenure information and parcels provided by NewGold, October 2017.

Datum: NAD83
Projection: UTM Zone 15N

N W E S

newgold Rainy River Project

RAINY RIVER PROJECT

Site Plan

FIGURE: C-4

SCALE: 1:90,000

P:\EIA\Projects\2011\TC111504 Rainy River\GIS\Air Baseline\Air quality 2017\MXD\RRR lands 1.mxd

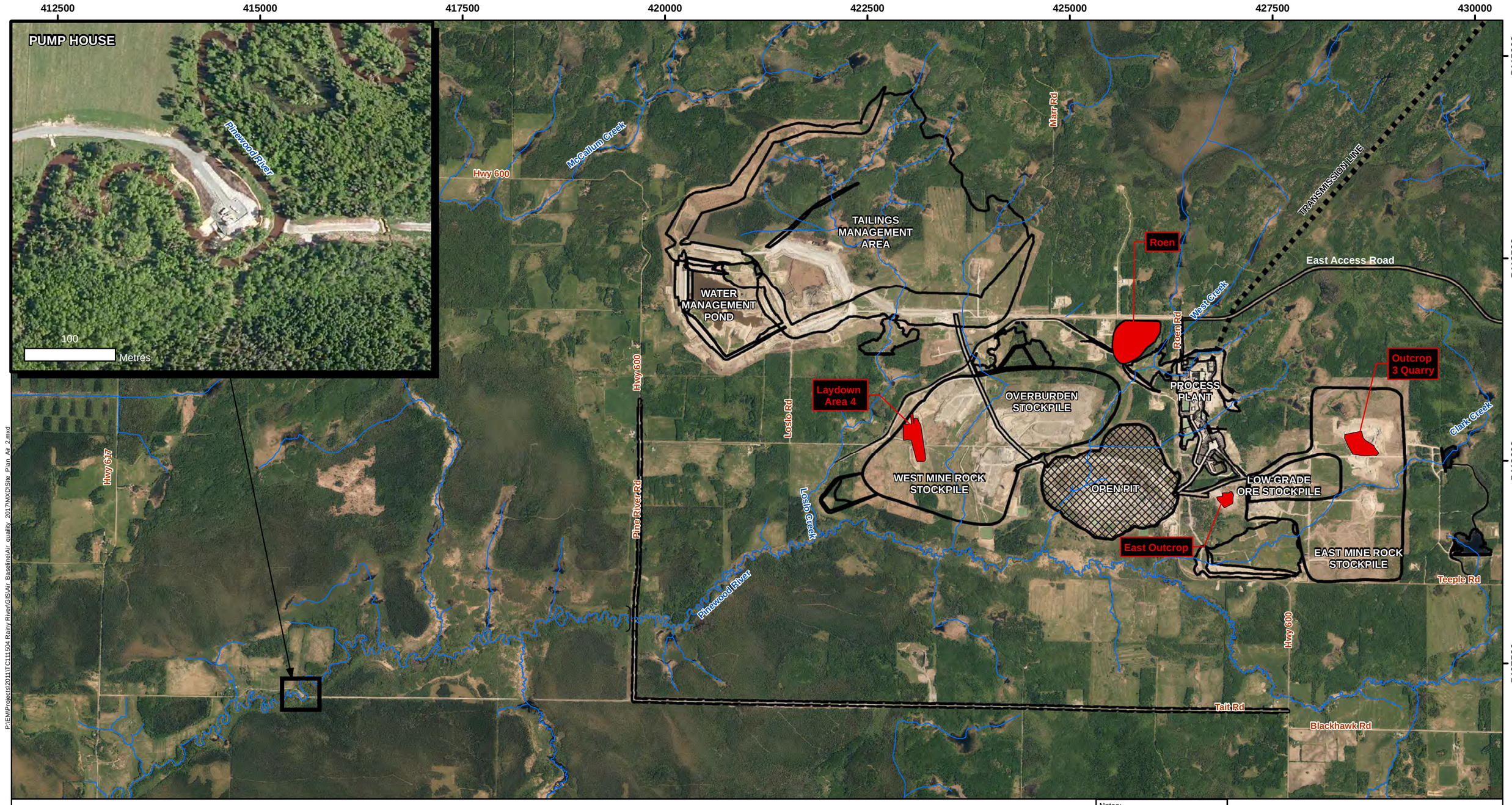

LEGEND

Site Features

- Underground Portal
- Open Pit
- Mine Site Infrastructure
- Site Roads
- Aggregate Pit / Quarry (labelled with name)

0 2 4 6 8 Kilometres

Notes:
- Aerial imagery provided by RRR scene date is summer 2017
- Only major facilities are shown. Connecting infrastructure and supporting facilities are generally not shown.

Datum: NAD83
Projection: UTM Zone 15N

N W E S

newgold Rainy River Project

RAINY RIVER PROJECT

Mine Site

FIGURE: C-3

SCALE: 1:62,000

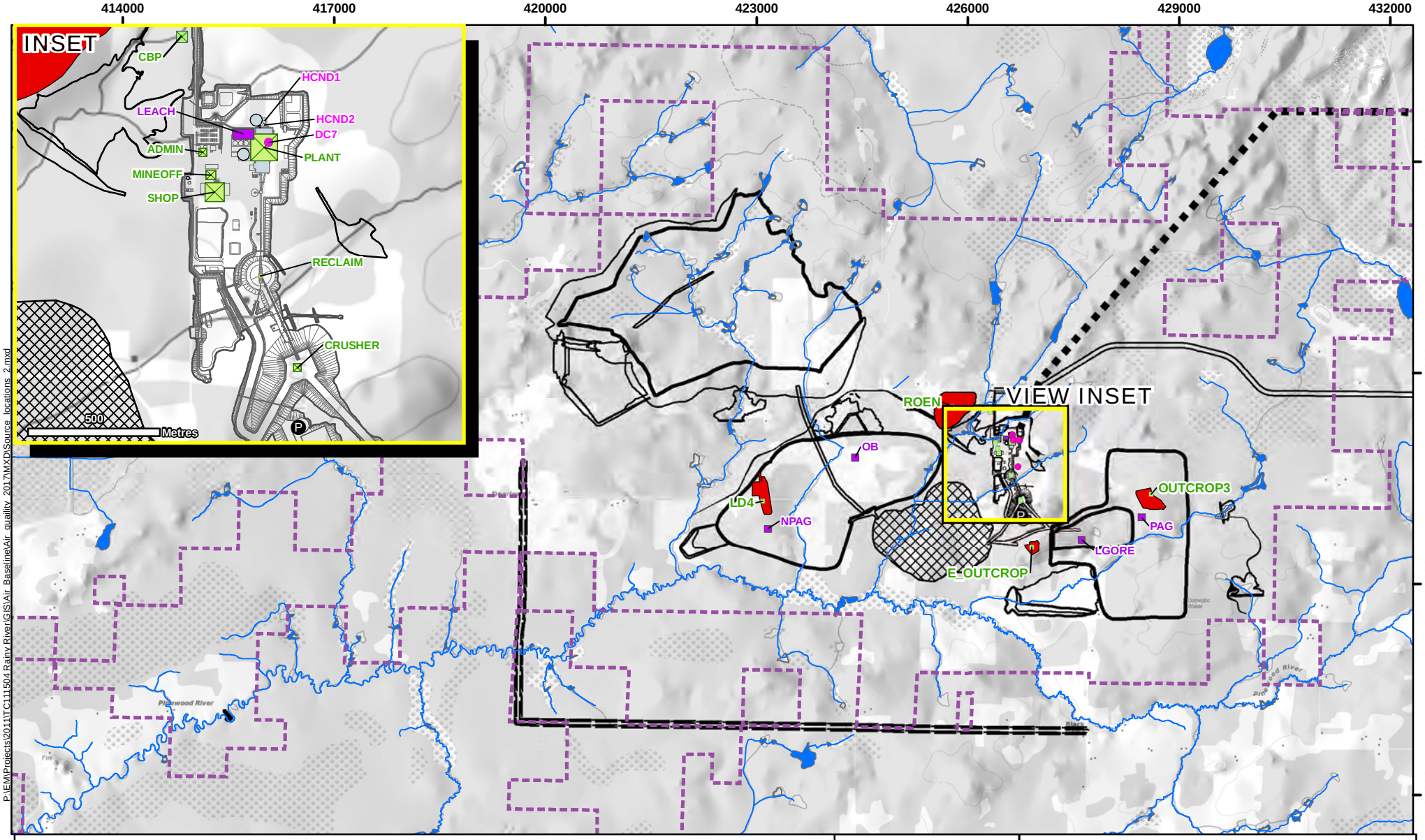

LEGEND

- Model Boundary
- Operation Buildings

Sources (Labelled with ID)

- Point
- Area
- Volume

Site Features

- Aggregate Pit / Quarry
- Underground Portal
- Open Pit
- Mine Site Infrastructure
- Site Roads

NOTES:
- Selected mine facilities are shown

Datum: NAD83
Projection: UTM Zone 15N

0 1.25 2.5 5 7.5 10 Kilometres

newgold Rainy River Project

RAINY RIVER PROJECT

Operation Source Locations

FIGURE: C-5

SCALE: 1:75,000

APPENDIX B. PROCESS FLOW DIAGRAM

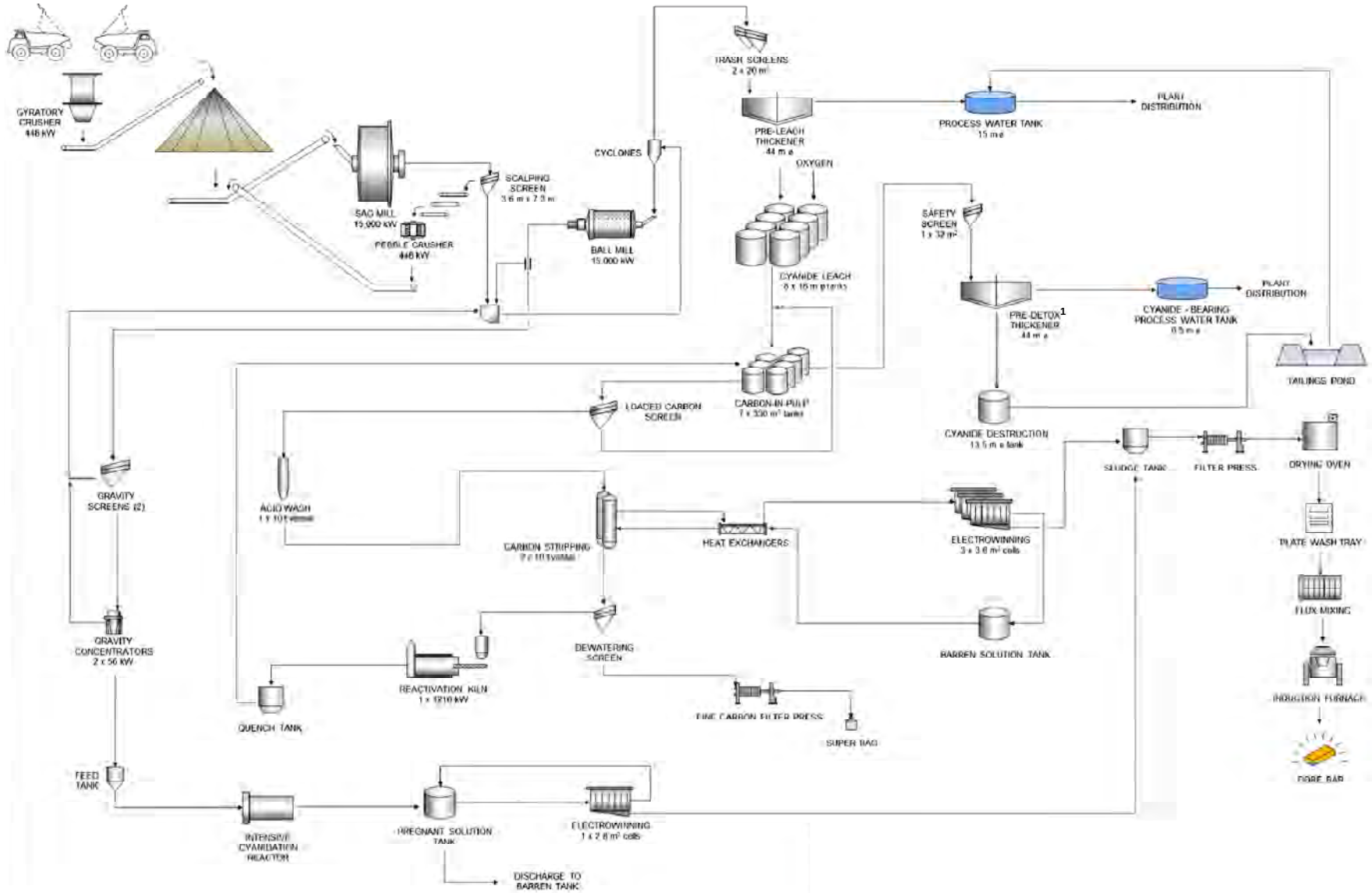

NOTES:
- Processing flowsheet provided by BBA
[1] Equipment identified for possible future implementation and has not been included in assessment.

newgold Rainy River Project

RAINY RIVER PROJECT

Simplified Processing Flowsheet

FIGURE: C-1

SCALE:

P:\EM\Projects\2011\TC111504 Rainy River\GIS\EA\Air\MXD_Maps\Simplified_Processing_Flowsheet_3_air.mxd

APPENDIX C. SUMMARY TABLES

Emission Summary and Dispersion Modelling Report
New Gold - Rainy River Mine
Sources and Contaminants Identification Table

Source ID	Model ID	Source Description	General Location	Expected Contaminants	Contaminant Included in
AMM	AMM	INCO Reactor Tank	Mill	Ammonia	No
APRON1_DC	APRON1_DC	Apron Feeder No.1 Dust Collector	Open Pit Mine	Metals, Particulates	No
APRON2_DC	APRON2_DC	Apron Feeder No.2 Dust Collector	Open Pit Mine	Metals, Particulates	No
APRON3_DC	APRON3_DC	Apron Feeder No.3 Dust Collector	Open Pit Mine	Metals, Particulates	No
BLAST	BLAST	Blasting	Open Pit Mine	NOx, SO2, CO, Particulates	Yes
BTR	BTR	Stockpile - PAG Buttress	Buttress	Metals, Particulates	No
CIP	CIP	Clean in Place Tank	Mill	Hydrogen cyanide	No
COMPRESSOR	COMPRESSOR	Mill Portable Compressor	Mill	NOx	No
CONST STK	CONST STK	Stockpile - Mix of OVB & PAG, high OVB pct.	Construction	Metals, Particulates	No
CONST_HR	CONST_HR	Haul Road - Construction Equipment	Open Pit Mine	Metals, Particulates	Yes
CREEK FILL	CREEK FILL	Stockpile - NPAG Creek Fill (5 m avg.)	Creek	Metals, Particulates	No
CRUSH_DC	CRUSH_DC	Gyratory Crusher Dust Collector	Open Pit Mine	Metals, Particulates	No
DC3	DC3	Induction Furnace	Mill	Metals, Particulates	No
DC4	DC4	Lime Bin Baghouse	Mill	Metals, Particulates	No
DC5	DC5	Flocculant	Mill	Metals, Particulates	No
DC6	DC6	Copper Sulphate Dust Collector	Mill	Metals, Particulates	Yes
DC7	DC7	Sodium Metabisulphate Loading	Mill	Metals, Particulates	No
DRILL	DRILL	Drilling	Open Pit Mine	Metals, Particulates	No
E_OUTCRUSH	E_OUTCRUSH	Aggregate Pit Crushing	Open Pit Mine	NOx, Metals, Particulates	Yes
E_OUTSCREEN	E_OUTSCREEN	Aggregate Pit Screening	Open Pit Mine	NOx, Metals, Particulates	No
EF1	EF1	Pebble Crushing Area	Mill	Metals, Particulates	No
EF4	EF4	Hydrochloric Acid Storage Tank	Mill	Hydrochloric acid	No
EF5	EF5	Electrowinning	Mill	Ammonia	Yes
EF8	EF8	Caustic Storage Tanks	Mill	Sodium Hydroxide	No
EGEN1	EGEN1	Emergency Generator 1	Open Pit Mine	NOx	No
EGEN2	EGEN2	Emergency Generator 2	Open Pit Mine	NOx	No
EMRS N	EMRS N	Stockpile - Mix of OVB & PAG, high OVB pct.	EMRS North	Metals, Particulates	No
EMRS S	EMRS S	Stockpile - Mix of OVB & PAG, high OVB pct. (18 m av	EMRS South	Metals, Particulates	Yes
EOC	EOC	Stockpile - Rock Quarry	Quarry	Metals, Particulates	No
FP1	FP1	Fire Pump 1	Open Pit Mine	NOx	No
FP2	FP2	Fire Pump 2	Open Pit Mine	NOx	No
HCND1	HCND1	CN Destruction	Mill	Metals, Particulates, HCN	Yes
HCND2	HCND2	CN Destruction	Mill	Metals, Particulates, HCN	Yes
INPIT_HR	INPIT_HR	Haul Road - Material from bottom of pit to split	Open Pit Mine	Metals, Particulates	Yes
LD4	LD4	Stockpile - NAG Quarry and Road	Laydown 4	Metals, Particulates	No
LEACH1	LEACH1	Leaching Tank 1	Mill	Hydrogen cyanide	Yes
LEACH2	LEACH2	Leaching Tank 2	Mill	Hydrogen cyanide	Yes
LEACH3	LEACH3	Leaching Tank 3	Mill	Hydrogen cyanide	Yes
LEACH4	LEACH4	Leaching Tank 4	Mill	Hydrogen cyanide	Yes
LEACH5	LEACH5	Leaching Tank 5	Mill	Hydrogen cyanide	Yes
LEACH6	LEACH6	Leaching Tank 6	Mill	Hydrogen cyanide	Yes
LEACH7	LEACH7	Leaching Tank 7	Mill	Hydrogen cyanide	Yes
LEACH8	LEACH8	Leaching Tank 8	Mill	Hydrogen cyanide	Yes
LG&PAG_HR	LG&PAG_HR	Haul Road - Low grade ore & PAG out of pit to split	Open Pit Mine	Metals, Particulates	Yes
LG_HR	LG_HR	Haul Road - LG ore from split to storage	Open Pit Mine	Metals, Particulates	No
LGO	LGO	Stockpile - OVB/HPAG w/ PAG Cap, then LG/MG	Low Grade	Metals, Particulates	Yes
LOAD PIT	LOAD PIT	Ore - Haul Truck Loading	Open Pit Mine	Particulates	No
MCL	MCL	Stockpile - Mix of OVB & PAG, high OVB pct.	MCL	Metals, Particulates	No
MGO	MGO	Stockpile - PAG (20 m avg.)	PAG	Metals, Particulates	No
MOBI_CRUSH	MOBI_CRUSH	Mobile Crusher	EMRS/LGO	NOx, Metals, Particulates	Yes
NPAG_HR	NPAG_HR	Haul Road - NPAG from pit split to storage	Open Pit Mine	Metals, Particulates	Yes
NPAG_ROAD	ROAD	Stockpile - NPAG (as shown, plus up to TMA corner)	NPAG Road	Metals, Particulates	No
OB_HR	OB_HR	Haul Road - OB from pit split to storage	Open Pit Mine	Metals, Particulates	No
OC1	OC1	Stockpile - NAG Quarry and Pad	Overburden	Metals, Particulates	Yes
ORE_HR	ORE_HR	Haul Road - Pit ore to drop at process plant	Open Pit Mine	Metals, Particulates	No
ORE_MILL_HR	ORE_MILL_HR	Haul Road - Ore from underground to mill	Open Pit Mine	Metals, Particulates	No
PAG_HR	PAG_HR	Haul Road - PAG from split to storage	Open Pit Mine	Metals, Particulates	Yes
PAG_ROAD	ROAD	Stockpile - PAG Road	PAG Road	Metals, Particulates	No
PIT	PIT	Stockpile - Mix of OVB & NPAG	Pit	Metals, Particulates	Yes
PORT1	PORT1	Propane - Underground Mine Portal 1	In Pit	NOx	Yes
PORT2	PORT2	Propane - Underground Mine Portal 2	West of Pit	NOx	Yes
RECLAIM	RECLAIM	Ore - Conveyor Drop Point for Crushed Ore to Stockpil	Open Pit Mine	Particulates	No
ROM STK	ROM STK	Stockpile - HGO/MGO Stockpile - NPAG Base	NPAG	Metals, Particulates	No
SPACEHEAT1	SPACEHEAT1	Propane Heating - Plant Building	Plant Building	NOx	Yes
SPACEHEAT2	SPACEHEAT2	Propane Heating - Admin Building	Admin	NOx	No
SPACEHEAT3	SPACEHEAT3	Propane Heating - Mineoff Building	Mineoff	NOx	No
SPACEHEAT4	SPACEHEAT4	Propane Heating - Shop Building	Maintenance Shop	NOx	No
TMA	TMA	Stockpile - Tailings	TMA	Metals, Particulates	Yes
TMA_HR	TMA_HR	Haul Road - TMA	Open Pit Mine	Metals, Particulates	No
UNDERPILE_DC	UNDERPILE_DC	Feed Stockpile (Under Pile) Dust Collector	Open Pit Mine	Metals, Particulates	No
UNLOAD CRUSH	UNLOAD CRUSH	Ore - Haul Truck Unloading to Dump Pocket	Open Pit Mine	Particulates	No
UNLOAD LGORE	UNLOAD LGORE	Ore - Haul Truck Unloading at LGORE	Open Pit Mine	Particulates	No
UNLOAD NPAG	UNLOAD NPAG	Ore - Haul Truck Unloading at NPAG Stockpile	Open Pit Mine	Particulates	Yes
UNLOAD OB	UNLOAD OB	Ore - Haul Truck Unloading at OB Stockpile	Open Pit Mine	Particulates	Yes
UNLOAD PAG	UNLOAD PAG	Ore - Haul Truck Unloading at PAG Stockpile	Open Pit Mine	Particulates	No
WELD	WELD	Maintenance Welding	Maintenance Shop	Metals, Particulates	No
WMRS	WMRS	Stockpile - Mix of OVB & NPAG	WMRS	Metals, Particulates	Yes
WPs	WPs	Watering Pumps	Open Pit Mine	NOx	Yes

Emission Summary and Dispersion Modelling Report
New Gold - Rainy River Mine
Source Summary Table - All Sources

			Stack Parameters							Emissions Data										
Source ID	Model ID	Source Description	Volumetric Flow Rate (Am^3/s)	Gas Exit Temperature (°C)	Inner Diameter (m)	Height above Grade (m)	Height above Roof (m)	X-Coordinate (m)	Y-Coordinate (m)	Contaminant	CAS RN	Facility-Wide Emission Rate (g/s)	Averaging Period (hrs)	Emission Rate Estimation Technique	Sample Calculation	Data Quality	% of Emissions	Significant?	Included in Modelling?	Details
E_OUTCRUSH	E_OUTCRUSH	Aggregate Pit Crushing	0.5	647.85	0.1	2	0	426912	5499525	Nitrogen oxides	10102-44-0	7.36E-01	1	EF	Eq. 1	AA, A, M	7.97%	Y	Y	
E_OUTCRUSH	E_OUTCRUSH	Aggregate Pit Crushing	0.5	647.85	0.1	2	0	426912	5499525	Nitrogen oxides	10102-44-0	7.36E-01	24	EF	Eq. 1	AA, A, M	18.12%	Y	Y	
E_OUTSCREEN	E_OUTSCREEN	Aggregate Pit Screening	0.5	647.85	0.1	2	0	426912	5499525	Nitrogen oxides	10102-44-0	6.92E-02	1	EF	Eq. 1	AA, A, M	0.75%	Y	N	
E_OUTSCREEN	E_OUTSCREEN	Aggregate Pit Screening	0.5	647.85	0.1	2	0	426912	5499525	Nitrogen oxides	10102-44-0	6.92E-02	24	EF	Eq. 1	AA, A, M	1.70%	Y	N	
MOBI_CRUSH	MOBI_CRUSH	Mobile Crusher	0.5	647.85	0.1	2	0	426912	5409574	Nitrogen oxides	10102-44-0	4.37E-01	1	EF	Eq. 1	AA, A, M	4.73%	Y	N	
MOBI_CRUSH	MOBI_CRUSH	Mobile Crusher	0.5	647.85	0.1	2	0	426912	5409574	Nitrogen oxides	10102-44-0	4.37E-01	24	EF	Eq. 1	AA, A, M	10.77%	Y	Y	
EGEN1	EGEN1	Emergency Generator 1	9.3	647.85	0.31	4.3	0	426657	5411199	Nitrogen oxides	10102-44-0	2.78E-01	1	EF	Eq. 1	AA, A, M	3.01%	Y	N	
EGEN1	EGEN1	Emergency Generator 1	9.3	647.85	0.31	4.3	0	426657	5411199	Nitrogen oxides	10102-44-0	7.93E-03	24	EF	Eq. 1	AA, A, M	0.20%	Y	N	
EGEN2	EGEN2	Emergency Generator 2	9.3	647.85	0.31	4.3	0	426657	5411199	Nitrogen oxides	10102-44-0	2.78E-01	1	EF	Eq. 1	AA, A, M	3.01%	Y	N	
EGEN2	EGEN2	Emergency Generator 2	9.3	647.85	0.31	4.3	0	426657	5411199	Nitrogen oxides	10102-44-0	7.93E-03	24	EF	Eq. 1	AA, A, M	0.20%	Y	N	
FP1	FP1	Fire Pump 1	0.7	516	0.15	5	0	426354	5410910	Nitrogen oxides	10102-44-0	3.99E-01	1	EF	Eq. 1	AA, A, M	4.32%	Y	N	
FP1	FP1	Fire Pump 1	0.7	516	0.15	5	0	426354	5410910	Nitrogen oxides	10102-44-0	9.99E-02	24	EF	Eq. 1	AA, A, M	2.46%	Y	N	
FP2	FP2	Fire Pump 2	0.7	516	0.15	5	0	426354	5410910	Nitrogen oxides	10102-44-0	3.99E-01	1	EF	Eq. 1	AA, A, M	4.32%	Y	N	
FP2	FP2	Fire Pump 2	0.7	516	0.15	5	0	426354	5410910	Nitrogen oxides	10102-44-0	9.99E-02	24	EF	Eq. 1	AA, A, M	2.46%	Y	N	
WPs	WPs	Watering Pumps	N/A	N/A	N/A	N/A	N/A	426727	5411179	Nitrogen oxides	10102-44-0	1.01E+00	1	EF	Eq. 1	AA, A, M	10.92%	Y	Y	
WPs	WPs	Watering Pumps	N/A	N/A	N/A	N/A	N/A	426727	5411179	Nitrogen oxides	10102-44-0	5.05E-01	24	EF	Eq. 1	AA, A, M	12.43%	Y	Y	
COMPRESSOR	COMPRESSOR	Mill Portable Compressor	N/A	N/A	N/A	N/A	N/A	N/A	N/A	Nitrogen oxides	10102-44-0	1.69E-01	1	EF	Eq. 1	AA, A, M	1.83%	Y	N	
COMPRESSOR	COMPRESSOR	Mill Portable Compressor	N/A	N/A	N/A	N/A	N/A	N/A	N/A	Nitrogen oxides	10102-44-0	7.04E-03	24	EF	Eq. 1	AA, A, M	0.17%	Y	N	
DRILL	DRILL	Drilling	N/A	N/A	N/A	N/A	N/A	425557.01	5410131.72	Suspended particulate matter	N/A-TSP	3.16E-02	24	EF	Eq. 2	A	0.13%	Y	N	
BLAST	BLAST	Blasting	N/A	N/A	N/A	N/A	N/A	425557.01	5410131.72	Suspended particulate matter	N/A-TSP	3.82E-04	24	EF	Eq. 3-7	A	0.00%	Y	N	
BLAST	BLAST	Blasting	N/A	N/A	N/A	N/A	N/A	425557.01	5410131.72	Nitrogen oxides	10102-44-0	3.52E+00	1	EF	Eq. 3-7	A	38.08%	Y	Y	
BLAST	BLAST	Blasting	N/A	N/A	N/A	N/A	N/A	425557.01	5410131.72	Nitrogen oxides	10102-44-0	1.47E-01	24	EF	Eq. 3-7	A	3.61%	Y	N	
BLAST	BLAST	Blasting	N/A	N/A	N/A	N/A	N/A	425557.01	5410131.72	Sulphur dioxide	7446-09-5	5.50E-01	1	EF	Eq. 3-7	A	10.04%	Y	Y	
BLAST	BLAST	Blasting	N/A	N/A	N/A	N/A	N/A	425557.01	5410131.72	Sulphur dioxide	7446-09-5	2.29E-02	24	EF	Eq. 3-7	A	0.46%	Y	N	
BLAST	BLAST	Blasting	N/A	N/A	N/A	N/A	N/A	425557.01	5410131.72	Carbon monoxide	630-08-0	1.87E+01	0.5	EF	Eq. 3-7	A	100.00%	Y	Y	
CRUSH_DC	CRUSH_DC	Gyratory Crusher Dust Collector	8.259080256	20	0.87	15	0	426756.09	5410203.16	Suspended particulate matter	N/A-TSP	1.65E-01	24	EF	Eq. 8	AA	0.68%	Y	N	
APRON1_DC	APRON1_DC	Apron Feeder No.1 Dust Collector	N/A	N/A	N/A	N/A	N/A	N/A	N/A	Suspended particulate matter	N/A-TSP	1.44E-02	24	EF	Eq. 8	AA	0.06%	Y	N	
APRON2_DC	APRON2_DC	Apron Feeder No.2 Dust Collector	N/A	N/A	N/A	N/A	N/A	N/A	N/A	Suspended particulate matter	N/A-TSP	1.44E-02	24	EF	Eq. 8	AA	0.06%	Y	N	
APRON3_DC	APRON3_DC	Apron Feeder No.3 Dust Collector	N/A	N/A	N/A	N/A	N/A	N/A	N/A	Suspended particulate matter	N/A-TSP	1.44E-02	24	EF	Eq. 8	AA	0.06%	Y	N	
UNDERPILE_DC	UNDERPILE_DC	Feed Stockpile (Under Pile) Dust Collector	N/A	N/A	N/A	N/A	N/A	N/A	N/A	Suspended particulate matter	N/A-TSP	5.20E-02	24	EF	Eq. 8	AA	0.22%	Y	N	
LOAD PIT	LOAD PIT	Ore - Haul Truck Loading	N/A	N/A	N/A	N/A	N/A	N/A	N/A	Suspended particulate matter	N/A-TSP	4.03E-01	24	EF	Eq. 9	A	1.67%	Y	N	
UNLOAD CRUSH	UNLOAD CRUSH	Ore - Haul Truck Unloading to Dump Pocket	N/A	N/A	N/A	N/A	N/A	N/A	N/A	Suspended particulate matter	N/A-TSP	4.03E-01	24	EF	Eq. 9	A	1.67%	Y	N	
RECLAIM	RECLAIM	Ore - Conveyor Drop Point for Crushed Ore to Stockpile	N/A	N/A	N/A	N/A	N/A	N/A	N/A	Suspended particulate matter	N/A-TSP	4.03E-01	24	EF	Eq. 9	A	1.67%	Y	N	
UNLOAD PAG	UNLOAD PAG	Ore - Haul Truck Unloading at PAG Stockpile	N/A	N/A	N/A	N/A	N/A	424349.58	5410746.42	Suspended particulate matter	N/A-TSP	1.06E+00	24	EF	Eq. 9	A	4.40%	Y	N	
UNLOAD NPAG	UNLOAD NPAG	Ore - Haul Truck Unloading at NPAG Stockpile	N/A	N/A	N/A	N/A	N/A	423113.34	5409735.67	Suspended particulate matter	N/A-TSP	1.69E+00	24	EF	Eq. 9	A	6.99%	Y	Y	
UNLOAD OB	UNLOAD OB	Ore - Haul Truck Unloading at OB Stockpile	N/A	N/A	N/A	N/A	N/A	425279.15	5410021.38	Suspended particulate matter	N/A-TSP	1.69E+00	24	EF	Eq. 9	A	6.99%	Y	Y	
UNLOAD LGORE	UNLOAD LGORE	Ore - Haul Truck Unloading at LGORE	N/A	N/A	N/A	N/A	N/A	N/A	N/A	Suspended particulate matter	N/A-TSP	3.75E-01	24	EF	Eq. 9	A	1.55%	Y	N	
E_OUTCRUSH	E_OUTCRUSH	Aggregate Pit Crushing	0.5	647.85	0.1	2	0	426912	5499525	Suspended particulate matter	N/A-TSP	2.12E-01	24	EF	Eq. 10	M	0.88%	Y	N	
MOBI_CRUSH	MOBI_CRUSH	Mobile Crusher	0.5	647.85	0.1	2	0	426912	5409574	Suspended particulate matter	N/A-TSP	8.22E-02	24	EF	Eq. 10	M	0.34%	Y	N	
E_OUTSCREEN	E_OUTSCREEN	Aggregate Pit Screening	0.5	647.85	0.1	2	0	426912	5499525	Suspended particulate matter	N/A-TSP	1.83E-01	24	EF	Eq. 10	M	0.76%	Y	N	
E_OUTSCREEN	E_OUTSCREEN	Aggregate Pit Screening	0.5	647.85	0.1	2	0	426912	5499525	Calcium chloride	10043-52-4	1.56E-04	24	EF	Eq. 10	M	100.00%	N	N	
LEACH1	LEACH1	Leaching Tank 1	N/A	N/A	N/A	N/A	N/A	426519.71	5411069.5	Hydrogen cyanide	74-90-8	2.74E-02	24	EC	Eq. 11	A	11.99%	Y	Y	
LEACH2	LEACH2	Leaching Tank 2	N/A	N/A	N/A	N/A	N/A	426540.23	5411069.5	Hydrogen cyanide	74-90-8	2.74E-02	24	EC	Eq. 11	A	11.99%	Y	Y	
LEACH3	LEACH3	Leaching Tank 3	N/A	N/A	N/A	N/A	N/A	426561.12	5411069.69	Hydrogen cyanide	74-90-8	2.74E-02	24	EC	Eq. 11	A	11.99%	Y	Y	
LEACH4	LEACH4	Leaching Tank 4	N/A	N/A	N/A	N/A	N/A	426582.69	5411069.69	Hydrogen cyanide	74-90-8	2.74E-02	24	EC	Eq. 11	A	11.99%	Y	Y	
LEACH5	LEACH5	Leaching Tank 5	N/A	N/A	N/A	N/A	N/A	426582.4	5411089.26	Hydrogen cyanide	74-90-8	2.74E-02	24	EC	Eq. 11	A	11.99%	Y	Y	
LEACH6	LEACH6	Leaching Tank 6	N/A	N/A	N/A	N/A	N/A	426561.31	5411089.73	Hydrogen cyanide	74-90-8	2.74E-02	24	EC	Eq. 11	A	11.99%	Y	Y	
LEACH7	LEACH7	Leaching Tank 7	N/A	N/A	N/A	N/A	N/A	426540.24	5411089.6	Hydrogen cyanide	74-90-8	2.74E-02	24	EC	Eq. 11	A	11.99%	Y	Y	
LEACH8	LEACH8	Leaching Tank 8	N/A	N/A	N/A	N/A	N/A	426519.11	5411089.04	Hydrogen cyanide	74-90-8	2.74E-02	24	EC	Eq. 11	A	11.99%	Y	Y	
CIP	CIP	Clean in Place Tank	N/A	N/A	N/A	N/A	N/A	426629.14	5411029.42	Hydrogen cyanide	74-90-8	4.12E-03	24	EC	Eq. 11	A	1.80%	Y	N	
HCND1	HCND1	CN Destruction	0.5	20	0.18	39	0.3	426630.44	5411129.14	Hydrogen cyanide	74-90-8	2.63E-03	24	EC	Eq. 11	A	1.15%	Y	N	
HCND2	HCND2	CN Destruction	0.5	20	0.18	39	0.3	426630.15	5411114.18	Hydrogen cyanide	74-90-8	2.63E-03	24	EC	Eq. 11	A	1.15%	Y	N	
HCND1	HCND1	CN Destruction	0.5	20	0.18	39	0.3	426630.44	5411129.14	Sulphur dioxide	7446-09-5	2.46E+00	1	MB	Eq. 12	AA	44.98%	Y	Y	
HCND1	HCND1	CN Destruction	0.5	20	0.18	39	0.3	426630.44	5411129.14	Sulphur dioxide	7446-09-5	2.46E+00	24	MB	Eq. 12	AA	49.77%	Y	Y	
HCND2	HCND2	CN Destruction	0.5	20	0.18	39	0.3	426630.15	5411114.18	Sulphur dioxide	7446-09-5	2.46E+00	1	MB	Eq. 12	AA	44.98%	Y	Y	
HCND2	HCND2	CN Destruction	0.5	20	0.18	39	0.3	426630.15	5411114.18	Sulphur dioxide	7446-09-5	2.46E+00	24	MB	Eq. 12	AA	49.77%	Y	Y	
DC4	DC4	Lime Bin Baghouse	N/A	N/A	N/A	N/A	N/A	N/A	N/A	Suspended particulate matter	N/A-TSP	3.00E-05	24	EF	Eq. 13	AA	0.00%	Y	N	
DC4	DC4	Lime Bin Baghouse	N/A	N/A	N/A	N/A	N/A	N/A	N/A	Calcium oxide	1305-78-8	1.50E-05	24	EF	Eq. 13	AA	100.00%	N	N	
DC3	DC3	Induction Furnace	N/A	N/A	N/A	N/A	N/A	N/A	N/A	Suspended particulate matter	N/A-TSP	1.90E-02	24	EF	Eq. 13	AA	0.08%	Y	N	
EF1	EF1	Pebble Crushing Area	N/A	N/A	N/A	N/A	N/A	N/A	N/A	Suspended particulate matter	N/A-TSP	9.92E-02	24	EF	Eq. 13	AA	0.41%	Y	N	
DC6	DC6	Copper Sulphate Dust Collector	1.18	20	0.35	39	0.3	426630.95	5411043.6	Suspended particulate matter	N/A-TSP	1.20E-02	24	EF	Eq. 13	AA	0.05%	Y	N	
DC6	DC6	Copper Sulphate Dust Collector	1.18	20	0.35	39	0.3	426630.95	5411043.6	Copper sulphate	7758-99-8	6.00E-03	N/A	EF	Eq. 13	AA	100.00%	Y	Y	
DC5	DC5	Flocculant	N/A	N/A	N/A	N/A	N/A	N/A	N/A	Suspended particulate matter	N/A-TSP	3.80E-03	24	EF	Eq. 13	AA	0.02%	Y	N	
DC7	DC7	Sodium Metabisulphate Loading	N/A	N/A	N/A	N/A	N/A	N/A	N/A	Suspended particulate matter	N/A-TSP	8.87E-03	24	EF	Eq. 13	AA	0.04%	Y	N	
DC7	DC7	Sodium Metabisulphate Loading	N/A	N/A	N/A	N/A	N/A	N/A	N/A	Sodium metabisulfite	7681-57-4	4.42E-03	24	EF	Eq. 13	AA	100.00%	N	N	
SPACEHEAT1	SPACEHEAT1	Propane Heating - Plant Building	0.5	450	0.3	37.2	1	426639	5411038	Nitrogen oxides	10102-44-0	3.17E-01	1	EF	Eq. 14	M	3.43%	Y	N	
SPACEHEAT1	SPACEHEAT1	Propane Heating - Plant Building	0.5	450	0.3	37.2	1	426639	5411038	Nitrogen oxides	10102-44-0	3.17E-01	24	EF	Eq. 14	M	7.80%	Y	Y	
SPACEHEAT2	SPACEHEAT2	Propane Heating - Admin Building	N/A	N/A	N/A	N/A	N/A	N/A	N/A	Nitrogen oxides	10102-44-0	2.92E-02	1	EF	Eq. 14	M	0.32%	Y	N	
SPACEHEAT2	SPACEHEAT2	Propane Heating - Admin Building	N/A	N/A	N/A	N/A	N/A	N/A	N/A	Nitrogen oxides	10102-44-0	2.92E-02	24	EF	Eq. 14	M	0.72%	Y	N	
SPACEHEAT3	SPACEHEAT3	Propane Heating - Mineoff Building	N/A	N/A	N/A	N/A	N/A	N/A	N/A	Nitrogen oxides	10102-44-0	4.05E-02	1	EF	Eq. 14	M	0.44%	Y	N	
SPACEHEAT3	SPACEHEAT3	Propane Heating - Mineoff Building	N/A	N/A	N/A	N/A	N/A	N/A	N/A	Nitrogen oxides	10102-44-0	4.05E-02	24	EF	Eq. 14	M	1.00%	Y	N	
SPACEHEAT4	SPACEHEAT4	Propane Heating - Shop Building	N/A	N/A	N/A	N/A	N/A	N/A	N/A	Nitrogen oxides	10102-44-0	1.63E-01	1	EF	Eq. 14	M	1.77%	Y	N	
SPACEHEAT4	SPACEHEAT4	Propane Heating - Shop Building	N/A	N/A	N/A	N/A	N/A	N/A	N/A	Nitrogen oxides	10102-44-0	1.63E-01	24	EF	Eq. 14	M	4.02%	Y	N	
PORT1	PORT1	Propane - Underground Mine Portal 1	255.8	16.85	4.5	1	N/A	426794.97	5410102.28	Nitrogen oxides	10102-44-0	6.98E-01	1	EF	Eq. 14	M	7.55%	Y	Y	
PORT1	PORT1	Propane - Underground Mine Portal 1	255.8	16.85	4.5	1	N/A	426794.97	5410102.28	Nitrogen oxides	10102-44-0	6.98E-01	24	EF	Eq. 14	M	17.18%	Y	Y	
PORT2	PORT2	Propane - Underground Mine Portal 2	255.8	16.85	4.5	1	N/A	426794.97	5410102.28	Nitrogen oxides	10102-44-0	6.98E-01	1	EF	Eq. 14	M	7.55%	Y	Y	
PORT2	PORT2	Propane - Underground Mine Portal 2	255.8	16.85	4.5	1	N/A	426794.97	5410102.28	Nitrogen oxides	10102-44-0	6.98E-01	24	EF	Eq. 14	M	17.18%	Y	Y	
INPIT_HR	INPIT_HR	Haul Road - Material from bottom of pit to split	N/A	N/A	N/A	N/A	N/A	426334.39	5409637.24	Suspended particulate matter	N/A-TSP	3.10E+00	24	EF	Eq. 15-17	AA	12.84%	Y	Y	Release Ht = 6 m;SigmaY = 0.93 m; SigmaX = 1.8 m; X Length = 4 m
INPIT_HR	INPIT_HR	Haul Road - Material from bottom of pit to split	N/A	N/A	N/A	N/A	N/A	426334.39	5409637.24	Silica (<10 µm diameter)	14808-60-7	6.16E-02	24	EF	Eq. 15-17	AA	40.91%	Y	Y	Release Ht = 6 m;SigmaY = 0.93 m; SigmaX = 1.8 m; X Length = 4 m
TMA_HR	TMA_HR	Haul Road - TMA	N/A	N/A	N/A	N/A	N/A	421009.05	5413368.81	Suspended particulate matter	N/A-TSP	3.59E-01	24	EF	Eq. 15-17	AA	1.49%	Y	N	Release Ht = 6 m;SigmaY = 0.93 m; SigmaX = 1.8 m; X Length = 4 m

TMA_HR	TMA_HR	Haul Road - TMA	N/A	N/A	N/A	N/A	N/A	421009.05	5413368.81	Silica (<10 µm diameter)	14808-60-7	6.72E-03	24	EF	Eq. 15-17	AA	4.46%	Y	N	Release Ht = 6 m;SigmaY = 0.93 m; SigmaX = 1.8 m; X Length = 4 m
ORE_HR	ORE_HR	Haul Road - Pit ore to drop at process plant	N/A	N/A	N/A	N/A	N/A	N/A	N/A	Suspended particulate matter	N/A-TSP	1.08E-01	24	EF	Eq. 15-17	AA	0.45%	Y	N	
ORE_HR	ORE_HR	Haul Road - Pit ore to drop at process plant	N/A	N/A	N/A	N/A	N/A	N/A	N/A	Silica (<10 µm diameter)	14808-60-7	2.02E-03	24	EF	Eq. 15-17	AA	1.34%	Y	N	
LG_HR	LG_HR	Haul Road - LG ore from split to storage	N/A	N/A	N/A	N/A	N/A	427163.4513	5409799.598	Suspended particulate matter	N/A-TSP	8.86E-02	24	EF	Eq. 15-17	AA	0.37%	Y	N	Release Ht = 6 m;SigmaY = 0.93 m; SigmaX = 1.8 m; X Length = 4 m
LG_HR	LG_HR	Haul Road - LG ore from split to storage	N/A	N/A	N/A	N/A	N/A	427163.4513	5409799.598	Silica (<10 µm diameter)	14808-60-7	1.76E-03	24	EF	Eq. 15-17	AA	1.17%	Y	N	Release Ht = 6 m;SigmaY = 0.93 m; SigmaX = 1.8 m; X Length = 4 m
NPAG_HR	NPAG_HR	Haul Road - NPAG from pit split to storage	N/A	N/A	N/A	N/A	N/A	424700.9517	5409942.02	Suspended particulate matter	N/A-TSP	8.27E-01	24	EF	Eq. 15-17	AA	3.42%	Y	N	Release Ht = 6 m;SigmaY = 0.93 m; SigmaX = 1.8 m; X Length = 4 m
NPAG_HR	NPAG_HR	Haul Road - NPAG from pit split to storage	N/A	N/A	N/A	N/A	N/A	424700.9517	5409942.02	Silica (<10 µm diameter)	14808-60-7	1.64E-02	24	EF	Eq. 15-17	AA	10.91%	Y	Y	Release Ht = 6 m;SigmaY = 0.93 m; SigmaX = 1.8 m; X Length = 4 m
OB_HR	OB_HR	Haul Road - OB from pit split to storage	N/A	N/A	N/A	N/A	N/A	424576.5	5410814.08	Suspended particulate matter	N/A-TSP	3.10E-01	24	EF	Eq. 15-17	AA	1.28%	Y	N	Release Ht = 6 m;SigmaY = 0.93 m; SigmaX = 1.8 m; X Length = 4 m
OB_HR	OB_HR	Haul Road - OB from pit split to storage	N/A	N/A	N/A	N/A	N/A	424576.5	5410814.08	Silica (<10 µm diameter)	14808-60-7	6.16E-03	24	EF	Eq. 15-17	AA	4.09%	Y	N	Release Ht = 6 m;SigmaY = 0.93 m; SigmaX = 1.8 m; X Length = 4 m
ORE_MILL_HR	ORE_MILL_HR	Haul Road - Ore from underground to mill								Suspended particulate matter	N/A-TSP	4.04E-02	24	EF	Eq. 15-17	AA	0.17%	Y	N	
ORE_MILL_HR	ORE_MILL_HR	Haul Road - Ore from underground to mill								Silica (<10 µm diameter)	14808-60-7	7.55E-04	24	EF	Eq. 15-17	AA	0.50%	Y	N	
LG&PAG_HR	LG&PAG_HR	Haul Road - Low grade ore & PAG out of pit to split	N/A	N/A	N/A	N/A	N/A	426361.1652	5409608.349	Suspended particulate matter	N/A-TSP	8.12E-01	24	EF	Eq. 15-17	AA	3.36%	Y	N	Release Ht = 6 m;SigmaY = 0.93 m; SigmaX = 1.8 m; X Length = 4 m
LG&PAG_HR	LG&PAG_HR	Haul Road - Low grade ore & PAG out of pit to split	N/A	N/A	N/A	N/A	N/A	426361.1652	5409608.349	Silica (<10 µm diameter)	14808-60-7	1.61E-02	24	EF	Eq. 15-17	AA	10.71%	Y	Y	Release Ht = 6 m;SigmaY = 0.93 m; SigmaX = 1.8 m; X Length = 4 m
PAG_HR	PAG_HR	Haul Road - PAG from split to storage	N/A	N/A	N/A	N/A	N/A	427167.1995	5409802.874	Suspended particulate matter	N/A-TSP	8.12E-01	24	EF	Eq. 15-17	AA	3.36%	Y	N	Release Ht = 6 m;SigmaY = 0.93 m; SigmaX = 1.8 m; X Length = 4 m
PAG_HR	PAG_HR	Haul Road - PAG from split to storage	N/A	N/A	N/A	N/A	N/A	427167.1995	5409802.874	Silica (<10 µm diameter)	14808-60-7	1.61E-02	24	EF	Eq. 15-17	AA	10.71%	Y	Y	Release Ht = 6 m;SigmaY = 0.93 m; SigmaX = 1.8 m; X Length = 4 m
CONST_HR	CONST_HR	Haul Road - Construction Equipment	N/A	N/A	N/A	N/A	N/A	421009.05	5413368.81	Suspended particulate matter	N/A-TSP	1.22E+00	24	EF	Eq. 15-17	AA	5.06%	Y	Y	
CONST_HR	CONST_HR	Haul Road - Construction Equipment	N/A	N/A	N/A	N/A	N/A	421009.05	5413368.81	Silica (<10 µm diameter)	14808-60-7	2.29E-02	24	EF	Eq. 15-17	AA	15.19%	Y	Y	
AMM	AMM	INCO Reactor Tank	N/A	N/A	N/A	N/A	N/A	N/A	N/A	Ammonia	7664-41-7	5.29E-04	24	EC	Eq. 19-20	M	0.70%	Y	N	
EF5	EF5	Electrowinning	0.5	20	0.18	39	0.3	426656.27	5411065.28	Ammonia	7664-41-7	7.54E-02	24	EC	Eq. 21-25	M	99.30%	Y	Y	
WELD	WELD	Maintenance Welding	N/A	N/A	N/A	3.5	0	426442.21	5410860.05	Suspended particulate matter	N/A-TSP	5.69E-03	24	EF	Eq. 26	M	0.02%	Y	N	
WELD	WELD	Maintenance Welding	N/A	N/A	N/A	3.5	0	426442.21	5410860.05	Chromium compounds (metallic, divalent and trivalent	7440-47-3	1.35E-06	24	EF	Eq. 26	M	0.06%	Y	N	
WELD	WELD	Maintenance Welding	N/A	N/A	N/A	3.5	0	426442.21	5410860.05	Cobalt	7440-48-4	3.99E-07	24	EF	Eq. 26	M	0.14%	Y	N	
WELD	WELD	Maintenance Welding	N/A	N/A	N/A	3.5	0	426442.21	5410860.05	Manganese and manganese compounds	7439-96-5	3.12E-04	24	EF	Eq. 26	M	2.88%	Y	N	
WELD	WELD	Maintenance Welding	N/A	N/A	N/A	3.5	0	426442.21	5410860.05	Nickel and nickel compounds	7440-02-0	1.53E-06	8760	EF	Eq. 26	M	0.20%	Y	N	
EF4	EF4	Hydrochloric Acid Storage Tank	N/A	N/A	N/A	N/A	N/A	N/A	N/A	Hydrochloric Acid	7647-01-0	6.61E-05	24	EC	Eq. 28-31	A	100.00%	N	N	
EF8	EF8	Caustic Storage Tanks	N/A	N/A	N/A	N/A	N/A	N/A	N/A	Sodium Hydroxide	1310-73-2	1.07E-05	24	EF	Eq. 28-31	A	100.00%	N	N	
WMRS	WMRS	Stockpile - Mix of OVB & NPAG	N/A	N/A	N/A	8.3	N/A	423113.34	5409735.67	Suspended particulate matter	N/A-TSP	1.92E+00	24	EF	Eq. 18	M	7.97%	Y	Y	
WMRS	WMRS	Stockpile - Mix of OVB & NPAG	N/A	N/A	N/A	8.3	N/A	423113.34	5409735.67	Silver	7440-22-4	1.08E-05	24	EF	Eq. 18	M	20.18%	N	N	
WMRS	WMRS	Stockpile - Mix of OVB & NPAG	N/A	N/A	N/A	8.3	N/A	423113.34	5409735.67	Aluminum	7429-90-5	9.13E-02	24	EF	Eq. 18	M	20.18%	Y	Y	
WMRS	WMRS	Stockpile - Mix of OVB & NPAG	N/A	N/A	N/A	8.3	N/A	423113.34	5409735.67	Arsenic and compounds	7440-38-2	1.83E-04	24	EF	Eq. 18	M	20.18%	Y	Y	
WMRS	WMRS	Stockpile - Mix of OVB & NPAG	N/A	N/A	N/A	8.3	N/A	423113.34	5409735.67	Gold	7440-57-5	1.98E-06	24	EF	Eq. 18	M	20.18%	N	N	
WMRS	WMRS	Stockpile - Mix of OVB & NPAG	N/A	N/A	N/A	8.3	N/A	423113.34	5409735.67	Boron	7440-42-8	7.25E-05	24	EF	Eq. 18	M	20.18%	N	N	
WMRS	WMRS	Stockpile - Mix of OVB & NPAG	N/A	N/A	N/A	8.3	N/A	423113.34	5409735.67	Barium - total water soluble	7440-39-3	4.22E-04	24	EF	Eq. 18	M	20.18%	Y	Y	
WMRS	WMRS	Stockpile - Mix of OVB & NPAG	N/A	N/A	N/A	8.3	N/A	423113.34	5409735.67	Beryllium and Beryllium Compounds	7440-41-7	2.64E-06	24	EF	Eq. 18	M	20.18%	Y	Y	
WMRS	WMRS	Stockpile - Mix of OVB & NPAG	N/A	N/A	N/A	8.3	N/A	423113.34	5409735.67	Bismuth	7440-69-9	3.29E-05	24	EF	Eq. 18	M	20.18%	N	N	
WMRS	WMRS	Stockpile - Mix of OVB & NPAG	N/A	N/A	N/A	8.3	N/A	423113.34	5409735.67	Calcium carbonate	471-34-1	6.81E-02	24	EF	Eq. 18	M	20.18%	Y	Y	
WMRS	WMRS	Stockpile - Mix of OVB & NPAG	N/A	N/A	N/A	8.3	N/A	423113.34	5409735.67	Cadmium and Cadmium Compounds	7440-43-9	2.37E-05	24	EF	Eq. 18	M	20.18%	Y	Y	
WMRS	WMRS	Stockpile - Mix of OVB & NPAG	N/A	N/A	N/A	8.3	N/A	423113.34	5409735.67	Cerium	7440-45-1	1.03E-04	24	EF	Eq. 18	M	20.18%	N	N	
WMRS	WMRS	Stockpile - Mix of OVB & NPAG	N/A	N/A	N/A	8.3	N/A	423113.34	5409735.67	Cobalt	7440-48-4	5.80E-05	24	EF	Eq. 18	M	20.15%	Y	Y	
WMRS	WMRS	Stockpile - Mix of OVB & NPAG	N/A	N/A	N/A	8.3	N/A	423113.34	5409735.67	Chromium Compounds (metallic, divalent and trivalent forms)	7440-47-3	4.81E-04	24	EF	Eq. 18	M	20.17%	Y	Y	
WMRS	WMRS	Stockpile - Mix of OVB & NPAG	N/A	N/A	N/A	8.3	N/A	423113.34	5409735.67	Cesium	7440-46-2	9.62E-06	N/A	EF	Eq. 18	M	20.18%	Y	Y	
WMRS	WMRS	Stockpile - Mix of OVB & NPAG	N/A	N/A	N/A	8.3	N/A	423113.34	5409735.67	Copper	7440-50-8	4.34E-04	24	EF	Eq. 18	M	20.18%	N	N	
WMRS	WMRS	Stockpile - Mix of OVB & NPAG	N/A	N/A	N/A	8.3	N/A	423113.34	5409735.67	Iron (metallic)	7439-89-6	1.10E-01	24	EF	Eq. 18	M	20.18%	Y	Y	
WMRS	WMRS	Stockpile - Mix of OVB & NPAG	N/A	N/A	N/A	8.3	N/A	423113.34	5409735.67	Gallium	7440-55-3	1.32E-05	N/A	EF	Eq. 18	M	20.18%	Y	Y	
WMRS	WMRS	Stockpile - Mix of OVB & NPAG	N/A	N/A	N/A	8.3	N/A	423113.34	5409735.67	Germanium	7440-56-4	2.64E-07	N/A	EF	Eq. 18	M	20.18%	N	N	
WMRS	WMRS	Stockpile - Mix of OVB & NPAG	N/A	N/A	N/A	8.3	N/A	423113.34	5409735.67	Hafnium	7440-58-6	6.59E-07	24	EF	Eq. 18	M	20.18%	N	N	
WMRS	WMRS	Stockpile - Mix of OVB & NPAG	N/A	N/A	N/A	8.3	N/A	423113.34	5409735.67	Mercury (Hg)	7439-97-6	5.27E-06	24	EF	Eq. 18	M	20.18%	N	N	
WMRS	WMRS	Stockpile - Mix of OVB & NPAG	N/A	N/A	N/A	8.3	N/A	423113.34	5409735.67	Indium	7440-74-6	5.27E-07	24	EF	Eq. 18	M	20.18%	N	N	
WMRS	WMRS	Stockpile - Mix of OVB & NPAG	N/A	N/A	N/A	8.3	N/A	423113.34	5409735.67	Potassium	7440-09-7	2.54E-02	24	EF	Eq. 18	M	20.18%	Y	Y	
WMRS	WMRS	Stockpile - Mix of OVB & NPAG	N/A	N/A	N/A	8.3	N/A	423113.34	5409735.67	Lanthanum	7439-91-0	6.07E-05	N/A	EF	Eq. 18	M	20.18%	Y	Y	
WMRS	WMRS	Stockpile - Mix of OVB & NPAG	N/A	N/A	N/A	8.3	N/A	423113.34	5409735.67	Lithium (other than hydrides)	7439-93-2	1.04E-04	24	EF	Eq. 18	M	20.18%	N	N	
WMRS	WMRS	Stockpile - Mix of OVB & NPAG	N/A	N/A	N/A	8.3	N/A	423113.34	5409735.67	Lutetium	7439-94-3	2.64E-07	N/A	EF	Eq. 18	M	20.18%	N	N	
WMRS	WMRS	Stockpile - Mix of OVB & NPAG	N/A	N/A	N/A	8.3	N/A	423113.34	5409735.67	Magnesium	7439-95-4	3.74E-02	24	EF	Eq. 18	M	20.18%	Y	Y	
WMRS	WMRS	Stockpile - Mix of OVB & NPAG	N/A	N/A	N/A	8.3	N/A	423113.34	5409735.67	Manganese and Manganese Compounds	7439-96-5	2.12E-03	24	EF	Eq. 18	M	19.60%	Y	Y	
WMRS	WMRS	Stockpile - Mix of OVB & NPAG	N/A	N/A	N/A	8.3	N/A	423113.34	5409735.67	Molybdenum	7439-98-7	1.58E-05	24	EF	Eq. 18	M	20.18%	N	N	
WMRS	WMRS	Stockpile - Mix of OVB & NPAG	N/A	N/A	N/A	8.3	N/A	423113.34	5409735.67	Sodium	7440-23-5	4.22E-03	N/A	EF	Eq. 18	M	20.18%	Y	Y	
WMRS	WMRS	Stockpile - Mix of OVB & NPAG	N/A	N/A	N/A	8.3	N/A	423113.34	5409735.67	Niobium	7440-03-1	3.29E-06	24	EF	Eq. 18	M	20.18%	N	N	
WMRS	WMRS	Stockpile - Mix of OVB & NPAG	N/A	N/A	N/A	8.3	N/A	423113.34	5409735.67	Nickel and Nickel Compounds	7440-02-0	1.52E-04	8760	EF	Eq. 18	M	20.14%	Y	Y	
WMRS	WMRS	Stockpile - Mix of OVB & NPAG	N/A	N/A	N/A	8.3	N/A	423113.34	5409735.67	Phosphorus	7723-14-0	1.05E-03	24	EF	Eq. 18	M	20.18%	Y	Y	
WMRS	WMRS	Stockpile - Mix of OVB & NPAG	N/A	N/A	N/A	8.3	N/A	423113.34	5409735.67	Lead and Lead Compounds	7439-92-1	2.87E-04	24	EF	Eq. 18	M	20.18%	Y	Y	
WMRS	WMRS	Stockpile - Mix of OVB & NPAG	N/A	N/A	N/A	8.3	N/A	423113.34	5409735.67	Lead and Lead Compounds	7439-92-1	2.87E-04	720	EF	Eq. 18	M	20.18%	Y	Y	
WMRS	WMRS	Stockpile - Mix of OVB & NPAG	N/A	N/A	N/A	8.3	N/A	423113.34	5409735.67	Rubidium	7440-17-7	2.93E-05	24	EF	Eq. 18	M	20.18%	N	N	
WMRS	WMRS	Stockpile - Mix of OVB & NPAG	N/A	N/A	N/A	8.3	N/A	423113.34	5409735.67	Rhenium	7440-15-5	6.59E-06	N/A	EF	Eq. 18	M	20.18%	Y	Y	
WMRS	WMRS	Stockpile - Mix of OVB & NPAG	N/A	N/A	N/A	8.3	N/A	423113.34	5409735.67	Antimony	7440-36-0	1.45E-05	24	EF	Eq. 18	M	20.18%	N	N	
WMRS	WMRS	Stockpile - Mix of OVB & NPAG	N/A	N/A	N/A	8.3	N/A	423113.34	5409735.67	Scandium	7440-20-2	2.37E-05	N/A	EF	Eq. 18	M	20.18%	Y	Y	
WMRS	WMRS	Stockpile - Mix of OVB & NPAG	N/A	N/A	N/A	8.3	N/A	423113.34	5409735.67	Selenium	7782-49-2	2.24E-05	24	EF	Eq. 18	M	20.18%	N	N	
WMRS	WMRS	Stockpile - Mix of OVB & NPAG	N/A	N/A	N/A	8.3	N/A	423113.34	5409735.67	Tin	7440-31-5	2.90E-05	24	EF	Eq. 18	M	20.18%	N	N	
WMRS	WMRS	Stockpile - Mix of OVB & NPAG	N/A	N/A	N/A	8.3	N/A	423113.34	5409735.67	Strontium	7440-24-6	3.20E-04	24	EF	Eq. 18	M	20.18%	N	N	
WMRS	WMRS	Stockpile - Mix of OVB & NPAG	N/A	N/A	N/A	8.3	N/A	423113.34	5409735.67	Tantalum	7440-25-7	1.32E-07	24	EF	Eq. 18	M	20.18%	N	N	
WMRS	WMRS	Stockpile - Mix of OVB & NPAG	N/A	N/A	N/A	8.3	N/A	423113.34	5409735.67	Terbium	7440-27-9	5.27E-07	N/A	EF	Eq. 18	M	20.18%	N	N	
WMRS	WMRS	Stockpile - Mix of OVB & NPAG	N/A	N/A	N/A	8.3	N/A	423113.34	5409735.67	Tellurium (except hydrogen telluride)	13494-80-9	3.69E-05	24	EF	Eq. 18	M	20.18%	N	N	
WMRS	WMRS	Stockpile - Mix of OVB & NPAG	N/A	N/A	N/A	8.3	N/A	423113.34	5409735.67	Thorium	7440-29-1	2.64E-05	N/A	EF	Eq. 18	M	20.18%	Y	Y	
WMRS	WMRS	Stockpile - Mix of OVB & NPAG	N/A	N/A	N/A	8.3	N/A	423113.34	5409735.67	Titanium	7440-32-6	5.53E-03	24	EF	Eq. 18	M	20.18%	Y	Y	
WMRS	WMRS	Stockpile - Mix of OVB & NPAG	N/A	N/A	N/A	8.3	N/A	423113.34	5409735.67	Thallium	7440-28-0	1.32E-05	24	EF	Eq. 18	M	20.18%	Y	Y	
WMRS	WMRS	Stockpile - Mix of OVB & NPAG	N/A	N/A	N/A	8.3	N/A	423113.34	5409735.67	Uranium and Uranium Compounds - U in PM10	7440-61-1	2.64E-05	8760	EF	Eq. 18	M	20.18%	Y	Y	
WMRS	WMRS	Stockpile - Mix of OVB & NPAG	N/A	N/A	N/A	8.3	N/A	423113.34	5409735.67	Vanadium	7440-62-2	2.11E-04	24	EF	Eq. 18	M	20.18%	Y	Y	
WMRS	WMRS	Stockpile - Mix of OVB & NPAG	N/A	N/A	N/A	8.3	N/A	423113.34	5409735.67	Tungsten	7440-33-7	4.93E-05	24	EF	Eq. 18	M	20.18%	N	N	
WMRS	WMRS	Stockpile - Mix of OVB & NPAG	N/A	N/A	N/A	8.3	N/A	423113.34	5409735.67	Yttrium	7440-65-5	1.44E-05	24	EF	Eq. 18	M	20.18%	N	N	
WMRS	WMRS	Stockpile - Mix of OVB & NPAG	N/A	N/A	N/A	8.3	N/A	423113.34	5409735.67	Ytterbium	7440-64-4	1.45E-06	N/A	EF	Eq. 18	M	20.18%	N	N	
WMRS	WMRS	Stockpile - Mix of OVB & NPAG	N/A	N/A	N/A	8.3	N/A	423113.34	5409735.67	Zinc	7440-66-6	3.36E-03	24	EF	Eq. 18	M	20.18%	Y	Y	
WMRS	WMRS	Stockpile - Mix of OVB & NPAG	N/A	N/A	N/A	8.3	N/A	423113.34	5409735.67	Zirconium	7440-67-7	3.36E-03	24	EF	Eq. 18	M	20.18%	Y	Y	

LD4	LD4	Stockpile - NAG Quarry and Road	N/A	N/A	N/A	N/A	N/A	N/A	N/A	Suspended particulate matter	N/A-TSP	1.23E-02	24	EF	Eq. 18	M	0.05%	Y	N	
LD4	LD4	Stockpile - NAG Quarry and Road	N/A	N/A	N/A	N/A	N/A	N/A	N/A	Silver	7440-22-4	6.89E-08	24	EF	Eq. 18	M	0.13%	N	N	
LD4	LD4	Stockpile - NAG Quarry and Road	N/A	N/A	N/A	N/A	N/A	N/A	N/A	Aluminum	7429-90-5	5.82E-04	24	EF	Eq. 18	M	0.13%	Y	N	
LD4	LD4	Stockpile - NAG Quarry and Road	N/A	N/A	N/A	N/A	N/A	N/A	N/A	Arsenic and compounds	7440-38-2	1.16E-06	24	EF	Eq. 18	M	0.13%	Y	N	
LD4	LD4	Stockpile - NAG Quarry and Road	N/A	N/A	N/A	N/A	N/A	N/A	N/A	Gold	7440-57-5	1.26E-08	24	EF	Eq. 18	M	0.13%	N	N	
LD4	LD4	Stockpile - NAG Quarry and Road	N/A	N/A	N/A	N/A	N/A	N/A	N/A	Boron	7440-42-8	4.62E-07	24	EF	Eq. 18	M	0.13%	N	N	
LD4	LD4	Stockpile - NAG Quarry and Road	N/A	N/A	N/A	N/A	N/A	N/A	N/A	Barium - total water soluble	7440-39-3	2.69E-06	24	EF	Eq. 18	M	0.13%	Y	N	
LD4	LD4	Stockpile - NAG Quarry and Road	N/A	N/A	N/A	N/A	N/A	N/A	N/A	Beryllium and Beryllium Compounds	7440-41-7	1.68E-08	24	EF	Eq. 18	M	0.13%	Y	N	
LD4	LD4	Stockpile - NAG Quarry and Road	N/A	N/A	N/A	N/A	N/A	N/A	N/A	Bismuth	7440-69-9	2.10E-07	24	EF	Eq. 18	M	0.13%	N	N	
LD4	LD4	Stockpile - NAG Quarry and Road	N/A	N/A	N/A	N/A	N/A	N/A	N/A	Calcium carbonate	471-34-1	4.35E-04	24	EF	Eq. 18	M	0.13%	Y	N	
LD4	LD4	Stockpile - NAG Quarry and Road	N/A	N/A	N/A	N/A	N/A	N/A	N/A	Cadmium and Cadmium Compounds	7440-43-9	1.51E-07	24	EF	Eq. 18	M	0.13%	Y	N	
LD4	LD4	Stockpile - NAG Quarry and Road	N/A	N/A	N/A	N/A	N/A	N/A	N/A	Cerium	7440-45-1	6.56E-07	24	EF	Eq. 18	M	0.13%	N	N	
LD4	LD4	Stockpile - NAG Quarry and Road	N/A	N/A	N/A	N/A	N/A	N/A	N/A	Cobalt	7440-48-4	3.70E-07	24	EF	Eq. 18	M	0.13%	Y	N	
LD4	LD4	Stockpile - NAG Quarry and Road	N/A	N/A	N/A	N/A	N/A	N/A	N/A	Chromium Compounds (metallic, divalent and trivalent forms)	7440-47-3	3.07E-06	24	EF	Eq. 18	M	0.13%	Y	N	
LD4	LD4	Stockpile - NAG Quarry and Road	N/A	N/A	N/A	N/A	N/A	N/A	N/A	Cesium	7440-46-2	6.14E-08	N/A	EF	Eq. 18	M	0.13%	Y	N	
LD4	LD4	Stockpile - NAG Quarry and Road	N/A	N/A	N/A	N/A	N/A	N/A	N/A	Copper	7440-50-8	2.77E-06	24	EF	Eq. 18	M	0.13%	N	N	
LD4	LD4	Stockpile - NAG Quarry and Road	N/A	N/A	N/A	N/A	N/A	N/A	N/A	Iron (metallic)	7439-89-6	7.00E-04	24	EF	Eq. 18	M	0.13%	Y	N	
LD4	LD4	Stockpile - NAG Quarry and Road	N/A	N/A	N/A	N/A	N/A	N/A	N/A	Gallium	7440-55-3	8.40E-08	N/A	EF	Eq. 18	M	0.13%	Y	N	
LD4	LD4	Stockpile - NAG Quarry and Road	N/A	N/A	N/A	N/A	N/A	N/A	N/A	Germanium	7440-56-4	1.68E-09	N/A	EF	Eq. 18	M	0.13%	N	N	
LD4	LD4	Stockpile - NAG Quarry and Road	N/A	N/A	N/A	N/A	N/A	N/A	N/A	Hafnium	7440-58-6	4.20E-09	24	EF	Eq. 18	M	0.13%	N	N	
LD4	LD4	Stockpile - NAG Quarry and Road	N/A	N/A	N/A	N/A	N/A	N/A	N/A	Mercury (Hg)	7439-97-6	3.36E-08	24	EF	Eq. 18	M	0.13%	N	N	
LD4	LD4	Stockpile - NAG Quarry and Road	N/A	N/A	N/A	N/A	N/A	N/A	N/A	Indium	7440-74-6	3.36E-09	24	EF	Eq. 18	M	0.13%	N	N	
LD4	LD4	Stockpile - NAG Quarry and Road	N/A	N/A	N/A	N/A	N/A	N/A	N/A	Potassium	7440-09-7	1.62E-04	24	EF	Eq. 18	M	0.13%	Y	N	
LD4	LD4	Stockpile - NAG Quarry and Road	N/A	N/A	N/A	N/A	N/A	N/A	N/A	Lanthanum	7439-91-0	3.87E-07	N/A	EF	Eq. 18	M	0.13%	Y	N	
LD4	LD4	Stockpile - NAG Quarry and Road	N/A	N/A	N/A	N/A	N/A	N/A	N/A	Lithium (other than hydrides)	7439-93-2	6.63E-07	24	EF	Eq. 18	M	0.13%	N	N	
LD4	LD4	Stockpile - NAG Quarry and Road	N/A	N/A	N/A	N/A	N/A	N/A	N/A	Lutetium	7439-94-3	1.68E-09	N/A	EF	Eq. 18	M	0.13%	N	N	
LD4	LD4	Stockpile - NAG Quarry and Road	N/A	N/A	N/A	N/A	N/A	N/A	N/A	Magnesium	7439-95-4	2.39E-04	24	EF	Eq. 18	M	0.13%	Y	N	
LD4	LD4	Stockpile - NAG Quarry and Road	N/A	N/A	N/A	N/A	N/A	N/A	N/A	Manganese and Manganese Compounds	7439-96-5	1.35E-05	24	EF	Eq. 18	M	0.13%	Y	N	
LD4	LD4	Stockpile - NAG Quarry and Road	N/A	N/A	N/A	N/A	N/A	N/A	N/A	Molybdenum	7439-98-7	1.01E-07	24	EF	Eq. 18	M	0.13%	N	N	
LD4	LD4	Stockpile - NAG Quarry and Road	N/A	N/A	N/A	N/A	N/A	N/A	N/A	Sodium	7440-23-5	2.69E-05	N/A	EF	Eq. 18	M	0.13%	Y	N	
LD4	LD4	Stockpile - NAG Quarry and Road	N/A	N/A	N/A	N/A	N/A	N/A	N/A	Niobium	7440-03-1	2.10E-08	24	EF	Eq. 18	M	0.13%	N	N	
LD4	LD4	Stockpile - NAG Quarry and Road	N/A	N/A	N/A	N/A	N/A	N/A	N/A	Nickel and Nickel Compounds	7440-02-0	9.67E-07	8760	EF	Eq. 18	M	0.13%	Y	N	
LD4	LD4	Stockpile - NAG Quarry and Road	N/A	N/A	N/A	N/A	N/A	N/A	N/A	Phosphorus	7723-14-0	6.72E-06	24	EF	Eq. 18	M	0.13%	Y	N	
LD4	LD4	Stockpile - NAG Quarry and Road	N/A	N/A	N/A	N/A	N/A	N/A	N/A	Lead and Lead Compounds	7439-92-1	1.83E-06	24	EF	Eq. 18	M	0.13%	Y	N	
LD4	LD4	Stockpile - NAG Quarry and Road	N/A	N/A	N/A	N/A	N/A	N/A	N/A	Lead and Lead Compounds	7439-92-1	1.83E-06	720	EF	Eq. 18	M	0.13%	Y	N	
LD4	LD4	Stockpile - NAG Quarry and Road	N/A	N/A	N/A	N/A	N/A	N/A	N/A	Rubidium	7440-17-7	1.87E-07	24	EF	Eq. 18	M	0.13%	N	N	
LD4	LD4	Stockpile - NAG Quarry and Road	N/A	N/A	N/A	N/A	N/A	N/A	N/A	Rhenium	7440-15-5	4.20E-08	N/A	EF	Eq. 18	M	0.13%	Y	N	
LD4	LD4	Stockpile - NAG Quarry and Road	N/A	N/A	N/A	N/A	N/A	N/A	N/A	Antimony	7440-36-0	9.24E-08	24	EF	Eq. 18	M	0.13%	N	N	
LD4	LD4	Stockpile - NAG Quarry and Road	N/A	N/A	N/A	N/A	N/A	N/A	N/A	Scandium	7440-20-2	1.51E-07	N/A	EF	Eq. 18	M	0.13%	Y	N	
LD4	LD4	Stockpile - NAG Quarry and Road	N/A	N/A	N/A	N/A	N/A	N/A	N/A	Selenium	7782-49-2	1.43E-07	24	EF	Eq. 18	M	0.13%	N	N	
LD4	LD4	Stockpile - NAG Quarry and Road	N/A	N/A	N/A	N/A	N/A	N/A	N/A	Tin	7440-31-5	1.85E-07	24	EF	Eq. 18	M	0.13%	N	N	
LD4	LD4	Stockpile - NAG Quarry and Road	N/A	N/A	N/A	N/A	N/A	N/A	N/A	Strontium	7440-24-6	2.04E-06	24	EF	Eq. 18	M	0.13%	N	N	
LD4	LD4	Stockpile - NAG Quarry and Road	N/A	N/A	N/A	N/A	N/A	N/A	N/A	Tantalum	7440-25-7	8.40E-10	24	EF	Eq. 18	M	0.13%	N	N	
LD4	LD4	Stockpile - NAG Quarry and Road	N/A	N/A	N/A	N/A	N/A	N/A	N/A	Terbium	7440-27-9	3.36E-09	N/A	EF	Eq. 18	M	0.13%	N	N	
LD4	LD4	Stockpile - NAG Quarry and Road	N/A	N/A	N/A	N/A	N/A	N/A	N/A	Tellurium (except hydrogen telluride)	13494-80-9	2.35E-07	24	EF	Eq. 18	M	0.13%	N	N	
LD4	LD4	Stockpile - NAG Quarry and Road	N/A	N/A	N/A	N/A	N/A	N/A	N/A	Thorium	7440-29-1	1.68E-07	N/A	EF	Eq. 18	M	0.13%	Y	N	
LD4	LD4	Stockpile - NAG Quarry and Road	N/A	N/A	N/A	N/A	N/A	N/A	N/A	Titanium	7440-32-6	3.53E-05	24	EF	Eq. 18	M	0.13%	Y	N	
LD4	LD4	Stockpile - NAG Quarry and Road	N/A	N/A	N/A	N/A	N/A	N/A	N/A	Thallium	7440-28-0	8.40E-08	24	EF	Eq. 18	M	0.13%	Y	N	
LD4	LD4	Stockpile - NAG Quarry and Road	N/A	N/A	N/A	N/A	N/A	N/A	N/A	Uranium and Uranium Compounds - U in PM10	7440-61-1	1.68E-07	8760	EF	Eq. 18	M	0.13%	Y	N	
LD4	LD4	Stockpile - NAG Quarry and Road	N/A	N/A	N/A	N/A	N/A	N/A	N/A	Vanadium	7440-62-2	1.34E-06	24	EF	Eq. 18	M	0.13%	Y	N	
LD4	LD4	Stockpile - NAG Quarry and Road	N/A	N/A	N/A	N/A	N/A	N/A	N/A	Tungsten	7440-33-7	3.14E-07	24	EF	Eq. 18	M	0.13%	N	N	
LD4	LD4	Stockpile - NAG Quarry and Road	N/A	N/A	N/A	N/A	N/A	N/A	N/A	Yttrium	7440-65-5	9.16E-08	24	EF	Eq. 18	M	0.13%	N	N	
LD4	LD4	Stockpile - NAG Quarry and Road	N/A	N/A	N/A	N/A	N/A	N/A	N/A	Ytterbium	7440-64-4	9.24E-09	N/A	EF	Eq. 18	M	0.13%	N	N	
LD4	LD4	Stockpile - NAG Quarry and Road	N/A	N/A	N/A	N/A	N/A	N/A	N/A	Zinc	7440-66-6	2.14E-05	24	EF	Eq. 18	M	0.13%	Y	N	
LD4	LD4	Stockpile - NAG Quarry and Road	N/A	N/A	N/A	N/A	N/A	N/A	N/A	Zirconium	7440-67-7	2.14E-05	24	EF	Eq. 18	M	0.13%	Y	N	
CONST STK	CONST STK	Stockpile - Mix of OVB & PAG, high OVB pct.	N/A	N/A	N/A	N/A	N/A	N/A	N/A	Suspended particulate matter	N/A-TSP	1.59E-01	24	EF	Eq. 18	M	0.66%	Y	N	
CONST STK	CONST STK	Stockpile - Mix of OVB & PAG, high OVB pct.	N/A	N/A	N/A	N/A	N/A	N/A	N/A	Silver	7440-22-4	8.95E-07	24	EF	Eq. 18	M	1.67%	N	N	
CONST STK	CONST STK	Stockpile - Mix of OVB & PAG, high OVB pct.	N/A	N/A	N/A	N/A	N/A	N/A	N/A	Aluminum	7429-90-5	7.57E-03	24	EF	Eq. 18	M	1.67%	Y	N	
CONST STK	CONST STK	Stockpile - Mix of OVB & PAG, high OVB pct.	N/A	N/A	N/A	N/A	N/A	N/A	N/A	Arsenic and compounds	7440-38-2	1.51E-05	24	EF	Eq. 18	M	1.67%	Y	N	
CONST STK	CONST STK	Stockpile - Mix of OVB & PAG, high OVB pct.	N/A	N/A	N/A	N/A	N/A	N/A	N/A	Gold	7440-57-5	1.64E-07	24	EF	Eq. 18	M	1.67%	N	N	
CONST STK	CONST STK	Stockpile - Mix of OVB & PAG, high OVB pct.	N/A	N/A	N/A	N/A	N/A	N/A	N/A	Boron	7440-42-8	6.01E-06	24	EF	Eq. 18	M	1.67%	N	N	
CONST STK	CONST STK	Stockpile - Mix of OVB & PAG, high OVB pct.	N/A	N/A	N/A	N/A	N/A	N/A	N/A	Barium - total water soluble	7440-39-3	3.49E-05	24	EF	Eq. 18	M	1.67%	Y	N	
CONST STK	CONST STK	Stockpile - Mix of OVB & PAG, high OVB pct.	N/A	N/A	N/A	N/A	N/A	N/A	N/A	Beryllium and Beryllium Compounds	7440-41-7	2.18E-07	24	EF	Eq. 18	M	1.67%	Y	N	
CONST STK	CONST STK	Stockpile - Mix of OVB & PAG, high OVB pct.	N/A	N/A	N/A	N/A	N/A	N/A	N/A	Bismuth	7440-69-9	2.73E-06	24	EF	Eq. 18	M	1.67%	N	N	
CONST STK	CONST STK	Stockpile - Mix of OVB & PAG, high OVB pct.	N/A	N/A	N/A	N/A	N/A	N/A	N/A	Calcium carbonate	471-34-1	5.65E-03	24	EF	Eq. 18	M	1.67%	Y	N	
CONST STK	CONST STK	Stockpile - Mix of OVB & PAG, high OVB pct.	N/A	N/A	N/A	N/A	N/A	N/A	N/A	Cadmium and Cadmium Compounds	7440-43-9	1.97E-06	24	EF	Eq. 18	M	1.67%	Y	N	
CONST STK	CONST STK	Stockpile - Mix of OVB & PAG, high OVB pct.	N/A	N/A	N/A	N/A	N/A	N/A	N/A	Cerium	7440-45-1	8.53E-06	24	EF	Eq. 18	M	1.67%	N	N	
CONST STK	CONST STK	Stockpile - Mix of OVB & PAG, high OVB pct.	N/A	N/A	N/A	N/A	N/A	N/A	N/A	Cobalt	7440-48-4	4.80E-06	24	EF	Eq. 18	M	1.67%	Y	N	
CONST STK	CONST STK	Stockpile - Mix of OVB & PAG, high OVB pct.	N/A	N/A	N/A	N/A	N/A	N/A	N/A	Chromium Compounds (metallic, divalent and trivalent forms)	7440-47-3	3.99E-05	24	EF	Eq. 18	M	1.67%	Y	N	
CONST STK	CONST STK	Stockpile - Mix of OVB & PAG, high OVB pct.	N/A	N/A	N/A	N/A	N/A	N/A	N/A	Cesium	7440-46-2	7.97E-07	N/A	EF	Eq. 18	M	1.67%	Y	N	
CONST STK	CONST STK	Stockpile - Mix of OVB & PAG, high OVB pct.	N/A	N/A	N/A	N/A	N/A	N/A	N/A	Copper	7440-50-8	3.60E-05	24	EF	Eq. 18	M	1.67%	N	N	
CONST STK	CONST STK	Stockpile - Mix of OVB & PAG, high OVB pct.	N/A	N/A	N/A	N/A	N/A	N/A	N/A	Iron (metallic)	7439-89-6	9.10E-03	24	EF	Eq. 18	M	1.67%	Y	N	
CONST STK	CONST STK	Stockpile - Mix of OVB & PAG, high OVB pct.	N/A	N/A	N/A	N/A	N/A	N/A	N/A	Gallium	7440-55-3	1.09E-06	N/A	EF	Eq. 18	M	1.67%	Y	N	
CONST STK	CONST STK	Stockpile - Mix of OVB & PAG, high OVB pct.	N/A	N/A	N/A	N/A	N/A	N/A	N/A	Germanium	7440-56-4	2.18E-08	N/A	EF	Eq. 18	M	1.67%	N	N	
CONST STK	CONST STK	Stockpile - Mix of OVB & PAG, high OVB pct.	N/A	N/A	N/A	N/A	N/A	N/A	N/A	Hafnium	7440-58-6	5.46E-08	24	EF	Eq. 18	M	1.67%	N	N	
CONST STK	CONST STK	Stockpile - Mix of OVB & PAG, high OVB pct.	N/A	N/A	N/A	N/A	N/A	N/A	N/A	Mercury (Hg)	7439-97-6	4.37E-07	24	EF	Eq. 18	M	1.67%	N	N	
CONST STK	CONST STK	Stockpile - Mix of OVB & PAG, high OVB pct.	N/A	N/A	N/A	N/A	N/A	N/A	N/A	Indium	7440-74-6	4.37E-08	24	EF	Eq. 18	M	1.67%	N	N	
CONST STK	CONST STK	Stockpile - Mix of OVB & PAG, high OVB pct.	N/A	N/A	N/A	N/A	N/A	N/A	N/A	Potassium	7440-09-7	2.11E-03	24	EF	Eq. 18	M	1.67%	Y	N	
CONST STK	CONST STK	Stockpile - Mix of OVB & PAG, high OVB pct.	N/A	N/A	N/A	N/A	N/A	N/A	N/A	Lanthanum	7439-91-0	5.03E-06	N/A	EF	Eq. 18	M	1.67%	Y	N	

CONST STK	CONST STK	Stockpile - Mix of OVB & PAG, high OVB pct.	N/A	N/A	N/A	N/A	N/A	N/A	N/A	Lithium (other than hydrides)	7439-93-2	8.61E-06	24	EF	Eq. 18	M	1.67%	N	N	
CONST STK	CONST STK	Stockpile - Mix of OVB & PAG, high OVB pct.	N/A	N/A	N/A	N/A	N/A	N/A	N/A	Lutetium	7439-94-3	2.18E-08	N/A	EF	Eq. 18	M	1.67%	N	N	
CONST STK	CONST STK	Stockpile - Mix of OVB & PAG, high OVB pct.	N/A	N/A	N/A	N/A	N/A	N/A	N/A	Magnesium	7439-95-4	3.10E-03	24	EF	Eq. 18	M	1.67%	Y	N	
CONST STK	CONST STK	Stockpile - Mix of OVB & PAG, high OVB pct.	N/A	N/A	N/A	N/A	N/A	N/A	N/A	Manganese and Manganese Compounds	7439-96-5	1.76E-04	24	EF	Eq. 18	M	1.62%	Y	N	
CONST STK	CONST STK	Stockpile - Mix of OVB & PAG, high OVB pct.	N/A	N/A	N/A	N/A	N/A	N/A	N/A	Molybdenum	7439-98-7	1.31E-06	24	EF	Eq. 18	M	1.67%	N	N	
CONST STK	CONST STK	Stockpile - Mix of OVB & PAG, high OVB pct.	N/A	N/A	N/A	N/A	N/A	N/A	N/A	Sodium	7440-23-5	3.49E-04	N/A	EF	Eq. 18	M	1.67%	Y	N	
CONST STK	CONST STK	Stockpile - Mix of OVB & PAG, high OVB pct.	N/A	N/A	N/A	N/A	N/A	N/A	N/A	Niobium	7440-03-1	2.73E-07	24	EF	Eq. 18	M	1.67%	N	N	
CONST STK	CONST STK	Stockpile - Mix of OVB & PAG, high OVB pct.	N/A	N/A	N/A	N/A	N/A	N/A	N/A	Nickel and Nickel Compounds	7440-02-0	1.26E-05	8760	EF	Eq. 18	M	1.67%	Y	N	
CONST STK	CONST STK	Stockpile - Mix of OVB & PAG, high OVB pct.	N/A	N/A	N/A	N/A	N/A	N/A	N/A	Phosphorus	7723-14-0	8.74E-05	24	EF	Eq. 18	M	1.67%	Y	N	
CONST STK	CONST STK	Stockpile - Mix of OVB & PAG, high OVB pct.	N/A	N/A	N/A	N/A	N/A	N/A	N/A	Lead and Lead Compounds	7439-92-1	2.38E-05	24	EF	Eq. 18	M	1.67%	Y	N	
CONST STK	CONST STK	Stockpile - Mix of OVB & PAG, high OVB pct.	N/A	N/A	N/A	N/A	N/A	N/A	N/A	Lead and Lead Compounds	7439-92-1	2.38E-05	720	EF	Eq. 18	M	1.67%	Y	N	
CONST STK	CONST STK	Stockpile - Mix of OVB & PAG, high OVB pct.	N/A	N/A	N/A	N/A	N/A	N/A	N/A	Rubidium	7440-17-7	2.42E-06	24	EF	Eq. 18	M	1.67%	N	N	
CONST STK	CONST STK	Stockpile - Mix of OVB & PAG, high OVB pct.	N/A	N/A	N/A	N/A	N/A	N/A	N/A	Rhenium	7440-15-5	5.46E-07	N/A	EF	Eq. 18	M	1.67%	Y	N	
CONST STK	CONST STK	Stockpile - Mix of OVB & PAG, high OVB pct.	N/A	N/A	N/A	N/A	N/A	N/A	N/A	Antimony	7440-36-0	1.20E-06	24	EF	Eq. 18	M	1.67%	N	N	
CONST STK	CONST STK	Stockpile - Mix of OVB & PAG, high OVB pct.	N/A	N/A	N/A	N/A	N/A	N/A	N/A	Scandium	7440-20-2	1.97E-06	N/A	EF	Eq. 18	M	1.67%	Y	N	
CONST STK	CONST STK	Stockpile - Mix of OVB & PAG, high OVB pct.	N/A	N/A	N/A	N/A	N/A	N/A	N/A	Selenium	7782-49-2	1.86E-06	24	EF	Eq. 18	M	1.67%	N	N	
CONST STK	CONST STK	Stockpile - Mix of OVB & PAG, high OVB pct.	N/A	N/A	N/A	N/A	N/A	N/A	N/A	Tin	7440-31-5	2.40E-06	24	EF	Eq. 18	M	1.67%	N	N	
CONST STK	CONST STK	Stockpile - Mix of OVB & PAG, high OVB pct.	N/A	N/A	N/A	N/A	N/A	N/A	N/A	Strontium	7440-24-6	2.65E-05	24	EF	Eq. 18	M	1.67%	N	N	
CONST STK	CONST STK	Stockpile - Mix of OVB & PAG, high OVB pct.	N/A	N/A	N/A	N/A	N/A	N/A	N/A	Tantalum	7440-25-7	1.09E-08	24	EF	Eq. 18	M	1.67%	N	N	
CONST STK	CONST STK	Stockpile - Mix of OVB & PAG, high OVB pct.	N/A	N/A	N/A	N/A	N/A	N/A	N/A	Terbium	7440-27-9	4.37E-08	N/A	EF	Eq. 18	M	1.67%	N	N	
CONST STK	CONST STK	Stockpile - Mix of OVB & PAG, high OVB pct.	N/A	N/A	N/A	N/A	N/A	N/A	N/A	Tellurium (except hydrogen telluride)	13494-80-9	3.06E-06	24	EF	Eq. 18	M	1.67%	N	N	
CONST STK	CONST STK	Stockpile - Mix of OVB & PAG, high OVB pct.	N/A	N/A	N/A	N/A	N/A	N/A	N/A	Thorium	7440-29-1	2.18E-06	N/A	EF	Eq. 18	M	1.67%	Y	N	
CONST STK	CONST STK	Stockpile - Mix of OVB & PAG, high OVB pct.	N/A	N/A	N/A	N/A	N/A	N/A	N/A	Titanium	7440-32-6	4.59E-04	24	EF	Eq. 18	M	1.67%	Y	N	
CONST STK	CONST STK	Stockpile - Mix of OVB & PAG, high OVB pct.	N/A	N/A	N/A	N/A	N/A	N/A	N/A	Thallium	7440-28-0	1.09E-06	24	EF	Eq. 18	M	1.67%	Y	N	
CONST STK	CONST STK	Stockpile - Mix of OVB & PAG, high OVB pct.	N/A	N/A	N/A	N/A	N/A	N/A	N/A	Uranium and Uranium Compounds - U in PM10	7440-61-1	2.18E-06	8760	EF	Eq. 18	M	1.67%	Y	N	
CONST STK	CONST STK	Stockpile - Mix of OVB & PAG, high OVB pct.	N/A	N/A	N/A	N/A	N/A	N/A	N/A	Vanadium	7440-62-2	1.75E-05	24	EF	Eq. 18	M	1.67%	Y	N	
CONST STK	CONST STK	Stockpile - Mix of OVB & PAG, high OVB pct.	N/A	N/A	N/A	N/A	N/A	N/A	N/A	Tungsten	7440-33-7	4.08E-06	24	EF	Eq. 18	M	1.67%	N	N	
CONST STK	CONST STK	Stockpile - Mix of OVB & PAG, high OVB pct.	N/A	N/A	N/A	N/A	N/A	N/A	N/A	Yttrium	7440-65-5	1.19E-06	24	EF	Eq. 18	M	1.67%	N	N	
CONST STK	CONST STK	Stockpile - Mix of OVB & PAG, high OVB pct.	N/A	N/A	N/A	N/A	N/A	N/A	N/A	Ytterbium	7440-64-4	1.20E-07	N/A	EF	Eq. 18	M	1.67%	N	N	
CONST STK	CONST STK	Stockpile - Mix of OVB & PAG, high OVB pct.	N/A	N/A	N/A	N/A	N/A	N/A	N/A	Zinc	7440-66-6	2.78E-04	24	EF	Eq. 18	M	1.67%	Y	N	
CONST STK	CONST STK	Stockpile - Mix of OVB & PAG, high OVB pct.	N/A	N/A	N/A	N/A	N/A	N/A	N/A	Zirconium	7440-67-7	2.78E-04	24	EF	Eq. 18	M	1.67%	Y	N	
OC1	OC1	Stockpile - NAG Quarry and Pad	N/A	N/A	N/A	6	N/A	428179	5410508	Suspended particulate matter	N/A-TSP	7.52E-01	24	EF	Eq. 18	M	3.11%	Y	N	
OC1	OC1	Stockpile - NAG Quarry and Pad	N/A	N/A	N/A	6	N/A	428179	5410508	Silver	7440-22-4	4.22E-06	24	EF	Eq. 18	M	7.89%	N	N	
OC1	OC1	Stockpile - NAG Quarry and Pad	N/A	N/A	N/A	6	N/A	428179	5410508	Aluminum	7429-90-5	3.57E-02	24	EF	Eq. 18	M	7.89%	Y	Y	
OC1	OC1	Stockpile - NAG Quarry and Pad	N/A	N/A	N/A	6	N/A	428179	5410508	Arsenic and compounds	7440-38-2	7.14E-05	24	EF	Eq. 18	M	7.89%	Y	Y	
OC1	OC1	Stockpile - NAG Quarry and Pad	N/A	N/A	N/A	6	N/A	428179	5410508	Gold	7440-57-5	7.73E-07	24	EF	Eq. 18	M	7.89%	N	N	
OC1	OC1	Stockpile - NAG Quarry and Pad	N/A	N/A	N/A	6	N/A	428179	5410508	Boron	7440-42-8	2.83E-05	24	EF	Eq. 18	M	7.89%	N	N	
OC1	OC1	Stockpile - NAG Quarry and Pad	N/A	N/A	N/A	6	N/A	428179	5410508	Barium - total water soluble	7440-39-3	1.65E-04	24	EF	Eq. 18	M	7.89%	Y	Y	
OC1	OC1	Stockpile - NAG Quarry and Pad	N/A	N/A	N/A	6	N/A	428179	5410508	Beryllium and Beryllium Compounds	7440-41-7	1.03E-06	24	EF	Eq. 18	M	7.89%	Y	Y	
OC1	OC1	Stockpile - NAG Quarry and Pad	N/A	N/A	N/A	6	N/A	428179	5410508	Bismuth	7440-69-9	1.29E-05	24	EF	Eq. 18	M	7.89%	N	N	
OC1	OC1	Stockpile - NAG Quarry and Pad	N/A	N/A	N/A	6	N/A	428179	5410508	Calcium carbonate	471-34-1	2.66E-02	24	EF	Eq. 18	M	7.89%	Y	Y	
OC1	OC1	Stockpile - NAG Quarry and Pad	N/A	N/A	N/A	6	N/A	428179	5410508	Cadmium and Cadmium Compounds	7440-43-9	9.27E-06	24	EF	Eq. 18	M	7.89%	Y	Y	
OC1	OC1	Stockpile - NAG Quarry and Pad	N/A	N/A	N/A	6	N/A	428179	5410508	Cerium	7440-45-1	4.02E-05	24	EF	Eq. 18	M	7.89%	N	N	
OC1	OC1	Stockpile - NAG Quarry and Pad	N/A	N/A	N/A	6	N/A	428179	5410508	Cobalt	7440-48-4	2.27E-05	24	EF	Eq. 18	M	7.88%	Y	Y	
OC1	OC1	Stockpile - NAG Quarry and Pad	N/A	N/A	N/A	6	N/A	428179	5410508	Chromium Compounds (metallic, divalent and trivalent forms)	7440-47-3	1.88E-04	24	EF	Eq. 18	M	7.88%	Y	Y	
OC1	OC1	Stockpile - NAG Quarry and Pad	N/A	N/A	N/A	6	N/A	428179	5410508	Cesium	7440-46-2	3.76E-06	N/A	EF	Eq. 18	M	7.89%	Y	Y	
OC1	OC1	Stockpile - NAG Quarry and Pad	N/A	N/A	N/A	6	N/A	428179	5410508	Copper	7440-50-8	1.70E-04	24	EF	Eq. 18	M	7.89%	N	N	
OC1	OC1	Stockpile - NAG Quarry and Pad	N/A	N/A	N/A	6	N/A	428179	5410508	Iron (metallic)	7439-89-6	4.29E-02	24	EF	Eq. 18	M	7.89%	Y	Y	
OC1	OC1	Stockpile - NAG Quarry and Pad	N/A	N/A	N/A	6	N/A	428179	5410508	Gallium	7440-55-3	5.15E-06	N/A	EF	Eq. 18	M	7.89%	Y	Y	
OC1	OC1	Stockpile - NAG Quarry and Pad	N/A	N/A	N/A	6	N/A	428179	5410508	Germanium	7440-56-4	1.03E-07	N/A	EF	Eq. 18	M	7.89%	N	N	
OC1	OC1	Stockpile - NAG Quarry and Pad	N/A	N/A	N/A	6	N/A	428179	5410508	Hafnium	7440-58-6	2.58E-07	24	EF	Eq. 18	M	7.89%	N	N	
OC1	OC1	Stockpile - NAG Quarry and Pad	N/A	N/A	N/A	6	N/A	428179	5410508	Mercury (Hg)	7439-97-6	2.06E-06	24	EF	Eq. 18	M	7.89%	N	N	
OC1	OC1	Stockpile - NAG Quarry and Pad	N/A	N/A	N/A	6	N/A	428179	5410508	Indium	7440-74-6	2.06E-07	24	EF	Eq. 18	M	7.89%	N	N	
OC1	OC1	Stockpile - NAG Quarry and Pad	N/A	N/A	N/A	6	N/A	428179	5410508	Potassium	7440-09-7	9.94E-03	24	EF	Eq. 18	M	7.89%	Y	Y	
OC1	OC1	Stockpile - NAG Quarry and Pad	N/A	N/A	N/A	6	N/A	428179	5410508	Lanthanum	7439-91-0	2.37E-05	N/A	EF	Eq. 18	M	7.89%	Y	Y	
OC1	OC1	Stockpile - NAG Quarry and Pad	N/A	N/A	N/A	6	N/A	428179	5410508	Lithium (other than hydrides)	7439-93-2	4.06E-05	24	EF	Eq. 18	M	7.89%	N	N	
OC1	OC1	Stockpile - NAG Quarry and Pad	N/A	N/A	N/A	6	N/A	428179	5410508	Lutetium	7439-94-3	1.03E-07	N/A	EF	Eq. 18	M	7.89%	N	N	
OC1	OC1	Stockpile - NAG Quarry and Pad	N/A	N/A	N/A	6	N/A	428179	5410508	Magnesium	7439-95-4	1.46E-02	24	EF	Eq. 18	M	7.89%	Y	Y	
OC1	OC1	Stockpile - NAG Quarry and Pad	N/A	N/A	N/A	6	N/A	428179	5410508	Manganese and Manganese Compounds	7439-96-5	8.29E-04	24	EF	Eq. 18	M	7.66%	Y	Y	
OC1	OC1	Stockpile - NAG Quarry and Pad	N/A	N/A	N/A	6	N/A	428179	5410508	Molybdenum	7439-98-7	6.18E-06	24	EF	Eq. 18	M	7.89%	N	N	
OC1	OC1	Stockpile - NAG Quarry and Pad	N/A	N/A	N/A	6	N/A	428179	5410508	Sodium	7440-23-5	1.65E-03	N/A	EF	Eq. 18	M	7.89%	Y	Y	
OC1	OC1	Stockpile - NAG Quarry and Pad	N/A	N/A	N/A	6	N/A	428179	5410508	Niobium	7440-03-1	1.29E-06	24	EF	Eq. 18	M	7.89%	N	N	
OC1	OC1	Stockpile - NAG Quarry and Pad	N/A	N/A	N/A	6	N/A	428179	5410508	Nickel and Nickel Compounds	7440-02-0	5.92E-05	8760	EF	Eq. 18	M	7.87%	Y	Y	
OC1	OC1	Stockpile - NAG Quarry and Pad	N/A	N/A	N/A	6	N/A	428179	5410508	Phosphorus	7723-14-0	4.12E-04	24	EF	Eq. 18	M	7.89%	Y	Y	
OC1	OC1	Stockpile - NAG Quarry and Pad	N/A	N/A	N/A	6	N/A	428179	5410508	Lead and Lead Compounds	7439-92-1	1.12E-04	24	EF	Eq. 18	M	7.89%	Y	Y	
OC1	OC1	Stockpile - NAG Quarry and Pad	N/A	N/A	N/A	6	N/A	428179	5410508	Lead and Lead Compounds	7439-92-1	1.12E-04	720	EF	Eq. 18	M	7.89%	Y	Y	
OC1	OC1	Stockpile - NAG Quarry and Pad	N/A	N/A	N/A	6	N/A	428179	5410508	Rubidium	7440-17-7	1.14E-05	24	EF	Eq. 18	M	7.89%	N	N	
OC1	OC1	Stockpile - NAG Quarry and Pad	N/A	N/A	N/A	6	N/A	428179	5410508	Rhenium	7440-15-5	2.58E-06	N/A	EF	Eq. 18	M	7.89%	Y	Y	
OC1	OC1	Stockpile - NAG Quarry and Pad	N/A	N/A	N/A	6	N/A	428179	5410508	Antimony	7440-36-0	5.67E-06	24	EF	Eq. 18	M	7.89%	N	N	
OC1	OC1	Stockpile - NAG Quarry and Pad	N/A	N/A	N/A	6	N/A	428179	5410508	Scandium	7440-20-2	9.27E-06	N/A	EF	Eq. 18	M	7.89%	Y	Y	
OC1	OC1	Stockpile - NAG Quarry and Pad	N/A	N/A	N/A	6	N/A	428179	5410508	Selenium	7782-49-2	8.76E-06	24	EF	Eq. 18	M	7.89%	N	N	
OC1	OC1	Stockpile - NAG Quarry and Pad	N/A	N/A	N/A	6	N/A	428179	5410508	Tin	7440-31-5	1.13E-05	24	EF	Eq. 18	M	7.89%	N	N	
OC1	OC1	Stockpile - NAG Quarry and Pad	N/A	N/A	N/A	6	N/A	428179	5410508	Strontium	7440-24-6	1.25E-04	24	EF	Eq. 18	M	7.89%	N	N	
OC1	OC1	Stockpile - NAG Quarry and Pad	N/A	N/A	N/A	6	N/A	428179	5410508	Tantalum	7440-25-7	5.15E-08	24	EF	Eq. 18	M	7.89%	N	N	
OC1	OC1	Stockpile - NAG Quarry and Pad	N/A	N/A	N/A	6	N/A	428179	5410508	Terbium	7440-27-9	2.06E-07	N/A	EF	Eq. 18	M	7.89%	N	N	
OC1	OC1	Stockpile - NAG Quarry and Pad	N/A	N/A	N/A	6	N/A	428179	5410508	Tellurium (except hydrogen telluride)	13494-80-9	1.44E-05	24	EF	Eq. 18	M	7.89%	N	N	
OC1	OC1	Stockpile - NAG Quarry and Pad	N/A	N/A	N/A	6	N/A	428179	5410508	Thorium	7440-29-1	1.03E-05	N/A	EF	Eq. 18	M	7.89%	Y	Y	
OC1	OC1	Stockpile - NAG Quarry and Pad	N/A	N/A	N/A	6	N/A	428179	5410508	Titanium	7440-32-6	2.16E-03	24	EF	Eq. 18	M	7.89%	Y	Y	
OC1	OC1	Stockpile - NAG Quarry and Pad	N/A	N/A	N/A	6	N/A	428179	5410508	Thallium	7440-28-0	5.15E-06	24	EF	Eq. 18	M	7.89%	Y	Y	
OC1	OC1	Stockpile - NAG Quarry and Pad	N/A	N/A	N/A	6	N/A	428179	5410508	Uranium and Uranium Compounds - U in PM10	7440-61-1	1.03E-05	8760	EF	Eq. 18	M	7.89%	Y	Y	

OC1	OC1	Stockpile - NAG Quarry and Pad	N/A	N/A	N/A	6	N/A	428179	5410508	Vanadium	7440-62-2	8.23E-05	24	EF	Eq. 18	M	7.89%	Y	Y	
OC1	OC1	Stockpile - NAG Quarry and Pad	N/A	N/A	N/A	6	N/A	428179	5410508	Tungsten	7440-33-7	1.93E-05	24	EF	Eq. 18	M	7.89%	N	N	
OC1	OC1	Stockpile - NAG Quarry and Pad	N/A	N/A	N/A	6	N/A	428179	5410508	Yttrium	7440-65-5	5.61E-06	24	EF	Eq. 18	M	7.89%	N	N	
OC1	OC1	Stockpile - NAG Quarry and Pad	N/A	N/A	N/A	6	N/A	428179	5410508	Ytterbium	7440-64-4	5.67E-07	N/A	EF	Eq. 18	M	7.89%	N	N	
OC1	OC1	Stockpile - NAG Quarry and Pad	N/A	N/A	N/A	6	N/A	428179	5410508	Zinc	7440-66-6	1.31E-03	24	EF	Eq. 18	M	7.89%	Y	Y	
OC1	OC1	Stockpile - NAG Quarry and Pad	N/A	N/A	N/A	6	N/A	428179	5410508	Zirconium	7440-67-7	1.31E-03	24	EF	Eq. 18	M	7.89%	Y	Y	
LGO	LGO	Stockpile - OVB/HPAG w/ PAG Cap, then LG/MG	N/A	N/A	N/A	4	N/A	427210	5409428	Suspended particulate matter	N/A-TSP	9.00E-01	24	EF	Eq. 18	M	3.73%	Y	N	
LGO	LGO	Stockpile - OVB/HPAG w/ PAG Cap, then LG/MG	N/A	N/A	N/A	4	N/A	427210	5409428	Silver	7440-22-4	5.05E-06	24	EF	Eq. 18	M	9.44%	N	N	
LGO	LGO	Stockpile - OVB/HPAG w/ PAG Cap, then LG/MG	N/A	N/A	N/A	4	N/A	427210	5409428	Aluminum	7429-90-5	4.27E-02	24	EF	Eq. 18	M	9.44%	Y	Y	
LGO	LGO	Stockpile - OVB/HPAG w/ PAG Cap, then LG/MG	N/A	N/A	N/A	4	N/A	427210	5409428	Arsenic and compounds	7440-38-2	8.54E-05	24	EF	Eq. 18	M	9.44%	Y	Y	
LGO	LGO	Stockpile - OVB/HPAG w/ PAG Cap, then LG/MG	N/A	N/A	N/A	4	N/A	427210	5409428	Gold	7440-57-5	9.24E-07	24	EF	Eq. 18	M	9.44%	N	N	
LGO	LGO	Stockpile - OVB/HPAG w/ PAG Cap, then LG/MG	N/A	N/A	N/A	4	N/A	427210	5409428	Boron	7440-42-8	3.39E-05	24	EF	Eq. 18	M	9.44%	N	N	
LGO	LGO	Stockpile - OVB/HPAG w/ PAG Cap, then LG/MG	N/A	N/A	N/A	4	N/A	427210	5409428	Barium - total water soluble	7440-39-3	1.97E-04	24	EF	Eq. 18	M	9.44%	Y	Y	
LGO	LGO	Stockpile - OVB/HPAG w/ PAG Cap, then LG/MG	N/A	N/A	N/A	4	N/A	427210	5409428	Beryllium and Beryllium Compounds	7440-41-7	1.23E-06	24	EF	Eq. 18	M	9.44%	Y	Y	
LGO	LGO	Stockpile - OVB/HPAG w/ PAG Cap, then LG/MG	N/A	N/A	N/A	4	N/A	427210	5409428	Bismuth	7440-69-9	1.54E-05	24	EF	Eq. 18	M	9.44%	N	N	
LGO	LGO	Stockpile - OVB/HPAG w/ PAG Cap, then LG/MG	N/A	N/A	N/A	4	N/A	427210	5409428	Calcium carbonate	471-34-1	3.19E-02	24	EF	Eq. 18	M	9.44%	Y	Y	
LGO	LGO	Stockpile - OVB/HPAG w/ PAG Cap, then LG/MG	N/A	N/A	N/A	4	N/A	427210	5409428	Cadmium and Cadmium Compounds	7440-43-9	1.11E-05	24	EF	Eq. 18	M	9.44%	Y	Y	
LGO	LGO	Stockpile - OVB/HPAG w/ PAG Cap, then LG/MG	N/A	N/A	N/A	4	N/A	427210	5409428	Cerium	7440-45-1	4.81E-05	24	EF	Eq. 18	M	9.44%	N	N	
LGO	LGO	Stockpile - OVB/HPAG w/ PAG Cap, then LG/MG	N/A	N/A	N/A	4	N/A	427210	5409428	Cobalt	7440-48-4	2.71E-05	24	EF	Eq. 18	M	9.42%	Y	Y	
LGO	LGO	Stockpile - OVB/HPAG w/ PAG Cap, then LG/MG	N/A	N/A	N/A	4	N/A	427210	5409428	Chromium Compounds (metallic, divalent and trivalent forms)	7440-47-3	2.25E-04	24	EF	Eq. 18	M	9.43%	Y	Y	
LGO	LGO	Stockpile - OVB/HPAG w/ PAG Cap, then LG/MG	N/A	N/A	N/A	4	N/A	427210	5409428	Cesium	7440-46-2	4.50E-06	N/A	EF	Eq. 18	M	9.44%	Y	Y	
LGO	LGO	Stockpile - OVB/HPAG w/ PAG Cap, then LG/MG	N/A	N/A	N/A	4	N/A	427210	5409428	Copper	7440-50-8	2.03E-04	24	EF	Eq. 18	M	9.44%	N	N	
LGO	LGO	Stockpile - OVB/HPAG w/ PAG Cap, then LG/MG	N/A	N/A	N/A	4	N/A	427210	5409428	Iron (metallic)	7439-89-6	5.13E-02	24	EF	Eq. 18	M	9.44%	Y	Y	
LGO	LGO	Stockpile - OVB/HPAG w/ PAG Cap, then LG/MG	N/A	N/A	N/A	4	N/A	427210	5409428	Gallium	7440-55-3	6.16E-06	N/A	EF	Eq. 18	M	9.44%	Y	Y	
LGO	LGO	Stockpile - OVB/HPAG w/ PAG Cap, then LG/MG	N/A	N/A	N/A	4	N/A	427210	5409428	Germanium	7440-56-4	1.23E-07	N/A	EF	Eq. 18	M	9.44%	N	N	
LGO	LGO	Stockpile - OVB/HPAG w/ PAG Cap, then LG/MG	N/A	N/A	N/A	4	N/A	427210	5409428	Hafnium	7440-58-6	3.08E-07	24	EF	Eq. 18	M	9.44%	N	N	
LGO	LGO	Stockpile - OVB/HPAG w/ PAG Cap, then LG/MG	N/A	N/A	N/A	4	N/A	427210	5409428	Mercury (Hg)	7439-97-6	2.46E-06	24	EF	Eq. 18	M	9.44%	N	N	
LGO	LGO	Stockpile - OVB/HPAG w/ PAG Cap, then LG/MG	N/A	N/A	N/A	4	N/A	427210	5409428	Indium	7440-74-6	2.46E-07	24	EF	Eq. 18	M	9.44%	N	N	
LGO	LGO	Stockpile - OVB/HPAG w/ PAG Cap, then LG/MG	N/A	N/A	N/A	4	N/A	427210	5409428	Potassium	7440-09-7	1.19E-02	24	EF	Eq. 18	M	9.44%	Y	Y	
LGO	LGO	Stockpile - OVB/HPAG w/ PAG Cap, then LG/MG	N/A	N/A	N/A	4	N/A	427210	5409428	Lanthanum	7439-91-0	2.84E-05	N/A	EF	Eq. 18	M	9.44%	Y	Y	
LGO	LGO	Stockpile - OVB/HPAG w/ PAG Cap, then LG/MG	N/A	N/A	N/A	4	N/A	427210	5409428	Lithium (other than hydrides)	7439-93-2	4.86E-05	24	EF	Eq. 18	M	9.44%	N	N	
LGO	LGO	Stockpile - OVB/HPAG w/ PAG Cap, then LG/MG	N/A	N/A	N/A	4	N/A	427210	5409428	Lutetium	7439-94-3	1.23E-07	N/A	EF	Eq. 18	M	9.44%	N	N	
LGO	LGO	Stockpile - OVB/HPAG w/ PAG Cap, then LG/MG	N/A	N/A	N/A	4	N/A	427210	5409428	Magnesium	7439-95-4	1.75E-02	24	EF	Eq. 18	M	9.44%	Y	Y	
LGO	LGO	Stockpile - OVB/HPAG w/ PAG Cap, then LG/MG	N/A	N/A	N/A	4	N/A	427210	5409428	Manganese and Manganese Compounds	7439-96-5	9.92E-04	24	EF	Eq. 18	M	9.17%	Y	Y	
LGO	LGO	Stockpile - OVB/HPAG w/ PAG Cap, then LG/MG	N/A	N/A	N/A	4	N/A	427210	5409428	Molybdenum	7439-98-7	7.39E-06	24	EF	Eq. 18	M	9.44%	N	N	
LGO	LGO	Stockpile - OVB/HPAG w/ PAG Cap, then LG/MG	N/A	N/A	N/A	4	N/A	427210	5409428	Sodium	7440-23-5	1.97E-03	N/A	EF	Eq. 18	M	9.44%	Y	Y	
LGO	LGO	Stockpile - OVB/HPAG w/ PAG Cap, then LG/MG	N/A	N/A	N/A	4	N/A	427210	5409428	Niobium	7440-03-1	1.54E-06	24	EF	Eq. 18	M	9.44%	N	N	
LGO	LGO	Stockpile - OVB/HPAG w/ PAG Cap, then LG/MG	N/A	N/A	N/A	4	N/A	427210	5409428	Nickel and Nickel Compounds	7440-02-0	7.09E-05	8760	EF	Eq. 18	M	9.42%	Y	Y	
LGO	LGO	Stockpile - OVB/HPAG w/ PAG Cap, then LG/MG	N/A	N/A	N/A	4	N/A	427210	5409428	Phosphorus	7723-14-0	4.93E-04	24	EF	Eq. 18	M	9.44%	Y	Y	
LGO	LGO	Stockpile - OVB/HPAG w/ PAG Cap, then LG/MG	N/A	N/A	N/A	4	N/A	427210	5409428	Lead and Lead Compounds	7439-92-1	1.34E-04	24	EF	Eq. 18	M	9.44%	Y	Y	
LGO	LGO	Stockpile - OVB/HPAG w/ PAG Cap, then LG/MG	N/A	N/A	N/A	4	N/A	427210	5409428	Lead and Lead Compounds	7439-92-1	1.34E-04	720	EF	Eq. 18	M	9.44%	Y	Y	
LGO	LGO	Stockpile - OVB/HPAG w/ PAG Cap, then LG/MG	N/A	N/A	N/A	4	N/A	427210	5409428	Rubidium	7440-17-7	1.37E-05	24	EF	Eq. 18	M	9.44%	N	N	
LGO	LGO	Stockpile - OVB/HPAG w/ PAG Cap, then LG/MG	N/A	N/A	N/A	4	N/A	427210	5409428	Rhenium	7440-15-5	3.08E-06	N/A	EF	Eq. 18	M	9.44%	Y	Y	
LGO	LGO	Stockpile - OVB/HPAG w/ PAG Cap, then LG/MG	N/A	N/A	N/A	4	N/A	427210	5409428	Antimony	7440-36-0	6.78E-06	24	EF	Eq. 18	M	9.44%	N	N	
LGO	LGO	Stockpile - OVB/HPAG w/ PAG Cap, then LG/MG	N/A	N/A	N/A	4	N/A	427210	5409428	Scandium	7440-20-2	1.11E-05	N/A	EF	Eq. 18	M	9.44%	Y	Y	
LGO	LGO	Stockpile - OVB/HPAG w/ PAG Cap, then LG/MG	N/A	N/A	N/A	4	N/A	427210	5409428	Selenium	7782-49-2	1.05E-05	24	EF	Eq. 18	M	9.44%	N	N	
LGO	LGO	Stockpile - OVB/HPAG w/ PAG Cap, then LG/MG	N/A	N/A	N/A	4	N/A	427210	5409428	Tin	7440-31-5	1.36E-05	24	EF	Eq. 18	M	9.44%	N	N	
LGO	LGO	Stockpile - OVB/HPAG w/ PAG Cap, then LG/MG	N/A	N/A	N/A	4	N/A	427210	5409428	Strontium	7440-24-6	1.50E-04	24	EF	Eq. 18	M	9.44%	N	N	
LGO	LGO	Stockpile - OVB/HPAG w/ PAG Cap, then LG/MG	N/A	N/A	N/A	4	N/A	427210	5409428	Tantalum	7440-25-7	6.16E-08	24	EF	Eq. 18	M	9.44%	N	N	
LGO	LGO	Stockpile - OVB/HPAG w/ PAG Cap, then LG/MG	N/A	N/A	N/A	4	N/A	427210	5409428	Terbium	7440-27-9	2.46E-07	N/A	EF	Eq. 18	M	9.44%	N	N	
LGO	LGO	Stockpile - OVB/HPAG w/ PAG Cap, then LG/MG	N/A	N/A	N/A	4	N/A	427210	5409428	Tellurium (except hydrogen telluride)	13494-80-9	1.73E-05	24	EF	Eq. 18	M	9.44%	N	N	
LGO	LGO	Stockpile - OVB/HPAG w/ PAG Cap, then LG/MG	N/A	N/A	N/A	4	N/A	427210	5409428	Thorium	7440-29-1	1.23E-05	N/A	EF	Eq. 18	M	9.44%	Y	Y	
LGO	LGO	Stockpile - OVB/HPAG w/ PAG Cap, then LG/MG	N/A	N/A	N/A	4	N/A	427210	5409428	Titanium	7440-32-6	2.59E-03	24	EF	Eq. 18	M	9.44%	Y	Y	
LGO	LGO	Stockpile - OVB/HPAG w/ PAG Cap, then LG/MG	N/A	N/A	N/A	4	N/A	427210	5409428	Thallium	7440-28-0	6.16E-06	24	EF	Eq. 18	M	9.44%	Y	Y	
LGO	LGO	Stockpile - OVB/HPAG w/ PAG Cap, then LG/MG	N/A	N/A	N/A	4	N/A	427210	5409428	Uranium and Uranium Compounds - U in PM10	7440-61-1	1.23E-05	8760	EF	Eq. 18	M	9.44%	Y	Y	
LGO	LGO	Stockpile - OVB/HPAG w/ PAG Cap, then LG/MG	N/A	N/A	N/A	4	N/A	427210	5409428	Vanadium	7440-62-2	9.85E-05	24	EF	Eq. 18	M	9.44%	Y	Y	
LGO	LGO	Stockpile - OVB/HPAG w/ PAG Cap, then LG/MG	N/A	N/A	N/A	4	N/A	427210	5409428	Tungsten	7440-33-7	2.30E-05	24	EF	Eq. 18	M	9.44%	N	N	
LGO	LGO	Stockpile - OVB/HPAG w/ PAG Cap, then LG/MG	N/A	N/A	N/A	4	N/A	427210	5409428	Yttrium	7440-65-5	6.72E-06	24	EF	Eq. 18	M	9.44%	N	N	
LGO	LGO	Stockpile - OVB/HPAG w/ PAG Cap, then LG/MG	N/A	N/A	N/A	4	N/A	427210	5409428	Ytterbium	7440-64-4	6.78E-07	N/A	EF	Eq. 18	M	9.44%	N	N	
LGO	LGO	Stockpile - OVB/HPAG w/ PAG Cap, then LG/MG	N/A	N/A	N/A	N/A	N/A	N/A	N/A	Zinc	7440-66-6	1.57E-03	24	EF	Eq. 18	M	9.44%	Y	Y	
LGO	LGO	Stockpile - OVB/HPAG w/ PAG Cap, then LG/MG	N/A	N/A	N/A	N/A	N/A	N/A	N/A	Zirconium	7440-67-7	1.57E-03	24	EF	Eq. 18	M	9.44%	Y	Y	
MGO	MGO	Stockpile - PAG (20 m avg.)	N/A	N/A	N/A	N/A	N/A	N/A	N/A	Suspended particulate matter	N/A-TSP	8.03E-02	24	EF	Eq. 18	M	0.33%	Y	N	
MGO	MGO	Stockpile - PAG (20 m avg.)	N/A	N/A	N/A	N/A	N/A	N/A	N/A	Silver	7440-22-4	4.51E-07	24	EF	Eq. 18	M	0.84%	N	N	
MGO	MGO	Stockpile - PAG (20 m avg.)	N/A	N/A	N/A	N/A	N/A	N/A	N/A	Aluminum	7429-90-5	3.81E-03	24	EF	Eq. 18	M	0.84%	Y	N	
MGO	MGO	Stockpile - PAG (20 m avg.)	N/A	N/A	N/A	N/A	N/A	N/A	N/A	Arsenic and compounds	7440-38-2	7.62E-06	24	EF	Eq. 18	M	0.84%	Y	N	
MGO	MGO	Stockpile - PAG (20 m avg.)	N/A	N/A	N/A	N/A	N/A	N/A	N/A	Gold	7440-57-5	8.25E-08	24	EF	Eq. 18	M	0.84%	N	N	
MGO	MGO	Stockpile - PAG (20 m avg.)	N/A	N/A	N/A	N/A	N/A	N/A	N/A	Boron	7440-42-8	3.03E-06	24	EF	Eq. 18	M	0.84%	N	N	
MGO	MGO	Stockpile - PAG (20 m avg.)	N/A	N/A	N/A	N/A	N/A	N/A	N/A	Barium - total water soluble	7440-39-3	1.76E-05	24	EF	Eq. 18	M	0.84%	Y	N	
MGO	MGO	Stockpile - PAG (20 m avg.)	N/A	N/A	N/A	N/A	N/A	N/A	N/A	Beryllium and Beryllium Compounds	7440-41-7	1.10E-07	24	EF	Eq. 18	M	0.84%	Y	N	
MGO	MGO	Stockpile - PAG (20 m avg.)	N/A	N/A	N/A	N/A	N/A	N/A	N/A	Bismuth	7440-69-9	1.38E-06	24	EF	Eq. 18	M	0.84%	N	N	
MGO	MGO	Stockpile - PAG (20 m avg.)	N/A	N/A	N/A	N/A	N/A	N/A	N/A	Calcium carbonate	471-34-1	2.84E-03	24	EF	Eq. 18	M	0.84%	Y	N	
MGO	MGO	Stockpile - PAG (20 m avg.)	N/A	N/A	N/A	N/A	N/A	N/A	N/A	Cadmium and Cadmium Compounds	7440-43-9	9.90E-07	24	EF	Eq. 18	M	0.84%	Y	N	
MGO	MGO	Stockpile - PAG (20 m avg.)	N/A	N/A	N/A	N/A	N/A	N/A	N/A	Cerium	7440-45-1	4.30E-06	24	EF	Eq. 18	M	0.84%	N	N	
MGO	MGO	Stockpile - PAG (20 m avg.)	N/A	N/A	N/A	N/A	N/A	N/A	N/A	Cobalt	7440-48-4	2.42E-06	24	EF	Eq. 18	M	0.84%	Y	N	
MGO	MGO	Stockpile - PAG (20 m avg.)	N/A	N/A	N/A	N/A	N/A	N/A	N/A	Chromium Compounds (metallic, divalent and trivalent forms)	7440-47-3	2.01E-05	24	EF	Eq. 18	M	0.84%	Y	N	
MGO	MGO	Stockpile - PAG (20 m avg.)	N/A	N/A	N/A	N/A	N/A	N/A	N/A	Cesium	7440-46-2	4.02E-07	N/A	EF	Eq. 18	M	0.84%	Y	N	
MGO	MGO	Stockpile - PAG (20 m avg.)	N/A	N/A	N/A	N/A	N/A	N/A	N/A	Copper	7440-50-8	1.81E-05	24	EF	Eq. 18	M	0.84%	N	N	
MGO	MGO	Stockpile - PAG (20 m avg.)	N/A	N/A	N/A	N/A	N/A	N/A	N/A	Iron (metallic)	7439-89-6	4.58E-03	24	EF	Eq. 18	M	0.84%	Y	N	
MGO	MGO	Stockpile - PAG (20 m avg.)	N/A	N/A	N/A	N/A	N/A	N/A	N/A	Gallium	7440-55-3	5.50E-07	N/A	EF	Eq. 18	M	0.84%	Y	N	

MGO	MGO	Stockpile - PAG (20 m avg.)	N/A	N/A	N/A	N/A	N/A	N/A	N/A	Germanium	7440-56-4	1.10E-08	N/A	EF	Eq. 18	M	0.84%	N	N	
MGO	MGO	Stockpile - PAG (20 m avg.)	N/A	N/A	N/A	N/A	N/A	N/A	N/A	Hafnium	7440-58-6	2.75E-08	24	EF	Eq. 18	M	0.84%	N	N	
MGO	MGO	Stockpile - PAG (20 m avg.)	N/A	N/A	N/A	N/A	N/A	N/A	N/A	Mercury (Hg)	7439-97-6	2.20E-07	24	EF	Eq. 18	M	0.84%	N	N	
MGO	MGO	Stockpile - PAG (20 m avg.)	N/A	N/A	N/A	N/A	N/A	N/A	N/A	Indium	7440-74-6	2.20E-08	24	EF	Eq. 18	M	0.84%	N	N	
MGO	MGO	Stockpile - PAG (20 m avg.)	N/A	N/A	N/A	N/A	N/A	N/A	N/A	Potassium	7440-09-7	1.06E-03	24	EF	Eq. 18	M	0.84%	Y	N	
MGO	MGO	Stockpile - PAG (20 m avg.)	N/A	N/A	N/A	N/A	N/A	N/A	N/A	Lanthanum	7439-91-0	2.54E-06	N/A	EF	Eq. 18	M	0.84%	Y	N	
MGO	MGO	Stockpile - PAG (20 m avg.)	N/A	N/A	N/A	N/A	N/A	N/A	N/A	Lithium (other than hydrides)	7439-93-2	4.34E-06	24	EF	Eq. 18	M	0.84%	N	N	
MGO	MGO	Stockpile - PAG (20 m avg.)	N/A	N/A	N/A	N/A	N/A	N/A	N/A	Lutetium	7439-94-3	1.10E-08	N/A	EF	Eq. 18	M	0.84%	N	N	
MGO	MGO	Stockpile - PAG (20 m avg.)	N/A	N/A	N/A	N/A	N/A	N/A	N/A	Magnesium	7439-95-4	1.56E-03	24	EF	Eq. 18	M	0.84%	Y	N	
MGO	MGO	Stockpile - PAG (20 m avg.)	N/A	N/A	N/A	N/A	N/A	N/A	N/A	Manganese and Manganese Compounds	7439-96-5	8.86E-05	24	EF	Eq. 18	M	0.82%	Y	N	
MGO	MGO	Stockpile - PAG (20 m avg.)	N/A	N/A	N/A	N/A	N/A	N/A	N/A	Molybdenum	7439-98-7	6.60E-07	24	EF	Eq. 18	M	0.84%	N	N	
MGO	MGO	Stockpile - PAG (20 m avg.)	N/A	N/A	N/A	N/A	N/A	N/A	N/A	Sodium	7440-23-5	1.76E-04	N/A	EF	Eq. 18	M	0.84%	Y	N	
MGO	MGO	Stockpile - PAG (20 m avg.)	N/A	N/A	N/A	N/A	N/A	N/A	N/A	Niobium	7440-03-1	1.38E-07	24	EF	Eq. 18	M	0.84%	N	N	
MGO	MGO	Stockpile - PAG (20 m avg.)	N/A	N/A	N/A	N/A	N/A	N/A	N/A	Nickel and Nickel Compounds	7440-02-0	6.33E-06	8760	EF	Eq. 18	M	0.84%	Y	N	
MGO	MGO	Stockpile - PAG (20 m avg.)	N/A	N/A	N/A	N/A	N/A	N/A	N/A	Phosphorus	7723-14-0	4.40E-05	24	EF	Eq. 18	M	0.84%	Y	N	
MGO	MGO	Stockpile - PAG (20 m avg.)	N/A	N/A	N/A	N/A	N/A	N/A	N/A	Lead and Lead Compounds	7439-92-1	1.20E-05	24	EF	Eq. 18	M	0.84%	Y	N	
MGO	MGO	Stockpile - PAG (20 m avg.)	N/A	N/A	N/A	N/A	N/A	N/A	N/A	Lead and Lead Compounds	7439-92-1	1.20E-05	720	EF	Eq. 18	M	0.84%	Y	N	
MGO	MGO	Stockpile - PAG (20 m avg.)	N/A	N/A	N/A	N/A	N/A	N/A	N/A	Rubidium	7440-17-7	1.22E-06	24	EF	Eq. 18	M	0.84%	N	N	
MGO	MGO	Stockpile - PAG (20 m avg.)	N/A	N/A	N/A	N/A	N/A	N/A	N/A	Rhenium	7440-15-5	2.75E-07	N/A	EF	Eq. 18	M	0.84%	Y	N	
MGO	MGO	Stockpile - PAG (20 m avg.)	N/A	N/A	N/A	N/A	N/A	N/A	N/A	Antimony	7440-36-0	6.05E-07	24	EF	Eq. 18	M	0.84%	N	N	
MGO	MGO	Stockpile - PAG (20 m avg.)	N/A	N/A	N/A	N/A	N/A	N/A	N/A	Scandium	7440-20-2	9.90E-07	N/A	EF	Eq. 18	M	0.84%	Y	N	
MGO	MGO	Stockpile - PAG (20 m avg.)	N/A	N/A	N/A	N/A	N/A	N/A	N/A	Selenium	7782-49-2	9.35E-07	24	EF	Eq. 18	M	0.84%	N	N	
MGO	MGO	Stockpile - PAG (20 m avg.)	N/A	N/A	N/A	N/A	N/A	N/A	N/A	Tin	7440-31-5	1.21E-06	24	EF	Eq. 18	M	0.84%	N	N	
MGO	MGO	Stockpile - PAG (20 m avg.)	N/A	N/A	N/A	N/A	N/A	N/A	N/A	Strontium	7440-24-6	1.34E-05	24	EF	Eq. 18	M	0.84%	N	N	
MGO	MGO	Stockpile - PAG (20 m avg.)	N/A	N/A	N/A	N/A	N/A	N/A	N/A	Tantalum	7440-25-7	5.50E-09	24	EF	Eq. 18	M	0.84%	N	N	
MGO	MGO	Stockpile - PAG (20 m avg.)	N/A	N/A	N/A	N/A	N/A	N/A	N/A	Terbium	7440-27-9	2.20E-08	N/A	EF	Eq. 18	M	0.84%	N	N	
MGO	MGO	Stockpile - PAG (20 m avg.)	N/A	N/A	N/A	N/A	N/A	N/A	N/A	Tellurium (except hydrogen telluride)	13494-80-9	1.54E-06	24	EF	Eq. 18	M	0.84%	N	N	
MGO	MGO	Stockpile - PAG (20 m avg.)	N/A	N/A	N/A	N/A	N/A	N/A	N/A	Thorium	7440-29-1	1.10E-06	N/A	EF	Eq. 18	M	0.84%	Y	N	
MGO	MGO	Stockpile - PAG (20 m avg.)	N/A	N/A	N/A	N/A	N/A	N/A	N/A	Titanium	7440-32-6	2.31E-04	24	EF	Eq. 18	M	0.84%	Y	N	
MGO	MGO	Stockpile - PAG (20 m avg.)	N/A	N/A	N/A	N/A	N/A	N/A	N/A	Thallium	7440-28-0	5.50E-07	24	EF	Eq. 18	M	0.84%	Y	N	
MGO	MGO	Stockpile - PAG (20 m avg.)	N/A	N/A	N/A	N/A	N/A	N/A	N/A	Uranium and Uranium Compounds - U in PM10	7440-61-1	1.10E-06	8760	EF	Eq. 18	M	0.84%	Y	N	
MGO	MGO	Stockpile - PAG (20 m avg.)	N/A	N/A	N/A	N/A	N/A	N/A	N/A	Vanadium	7440-62-2	8.80E-06	24	EF	Eq. 18	M	0.84%	Y	N	
MGO	MGO	Stockpile - PAG (20 m avg.)	N/A	N/A	N/A	N/A	N/A	N/A	N/A	Tungsten	7440-33-7	2.06E-06	24	EF	Eq. 18	M	0.84%	N	N	
MGO	MGO	Stockpile - PAG (20 m avg.)	N/A	N/A	N/A	N/A	N/A	N/A	N/A	Yttrium	7440-65-5	6.00E-07	24	EF	Eq. 18	M	0.84%	N	N	
MGO	MGO	Stockpile - PAG (20 m avg.)	N/A	N/A	N/A	N/A	N/A	N/A	N/A	Ytterbium	7440-64-4	6.05E-08	N/A	EF	Eq. 18	M	0.84%	N	N	
MGO	MGO	Stockpile - PAG (20 m avg.)	N/A	N/A	N/A	N/A	N/A	N/A	N/A	Zinc	7440-66-6	1.40E-04	24	EF	Eq. 18	M	0.84%	Y	N	
MGO	MGO	Stockpile - PAG (20 m avg.)	N/A	N/A	N/A	N/A	N/A	N/A	N/A	Zirconium	7440-67-7	1.40E-04	24	EF	Eq. 18	M	0.84%	Y	N	
EMRS S	EMRS S	Stockpile - Mix of OVB & PAG, high OVB pct. (18 m avg.)	N/A	N/A	N/A	18	N/A	424349.58	5410746.42	Suspended particulate matter	N/A-TSP	1.51E+00	24	EF	Eq. 18	M	6.26%	Y	Y	
EMRS S	EMRS S	Stockpile - Mix of OVB & PAG, high OVB pct. (18 m avg.)	N/A	N/A	N/A	18	N/A	424349.58	5410746.42	Silver	7440-22-4	8.49E-06	24	EF	Eq. 18	M	15.86%	N	N	
EMRS S	EMRS S	Stockpile - Mix of OVB & PAG, high OVB pct. (18 m avg.)	N/A	N/A	N/A	18	N/A	424349.58	5410746.42	Aluminum	7429-90-5	7.18E-02	24	EF	Eq. 18	M	15.86%	Y	Y	
EMRS S	EMRS S	Stockpile - Mix of OVB & PAG, high OVB pct. (18 m avg.)	N/A	N/A	N/A	18	N/A	424349.58	5410746.42	Arsenic and compounds	7440-38-2	1.44E-04	24	EF	Eq. 18	M	15.86%	Y	Y	
EMRS S	EMRS S	Stockpile - Mix of OVB & PAG, high OVB pct. (18 m avg.)	N/A	N/A	N/A	18	N/A	424349.58	5410746.42	Gold	7440-57-5	1.55E-06	24	EF	Eq. 18	M	15.86%	N	N	
EMRS S	EMRS S	Stockpile - Mix of OVB & PAG, high OVB pct. (18 m avg.)	N/A	N/A	N/A	18	N/A	424349.58	5410746.42	Boron	7440-42-8	5.70E-05	24	EF	Eq. 18	M	15.86%	N	N	
EMRS S	EMRS S	Stockpile - Mix of OVB & PAG, high OVB pct. (18 m avg.)	N/A	N/A	N/A	18	N/A	424349.58	5410746.42	Barium - total water soluble	7440-39-3	3.31E-04	24	EF	Eq. 18	M	15.86%	Y	Y	
EMRS S	EMRS S	Stockpile - Mix of OVB & PAG, high OVB pct. (18 m avg.)	N/A	N/A	N/A	18	N/A	424349.58	5410746.42	Beryllium and Beryllium Compounds	7440-41-7	2.07E-06	24	EF	Eq. 18	M	15.86%	Y	Y	
EMRS S	EMRS S	Stockpile - Mix of OVB & PAG, high OVB pct. (18 m avg.)	N/A	N/A	N/A	18	N/A	424349.58	5410746.42	Bismuth	7440-69-9	2.59E-05	24	EF	Eq. 18	M	15.86%	N	N	
EMRS S	EMRS S	Stockpile - Mix of OVB & PAG, high OVB pct. (18 m avg.)	N/A	N/A	N/A	18	N/A	424349.58	5410746.42	Calcium carbonate	471-34-1	5.35E-02	24	EF	Eq. 18	M	15.86%	Y	Y	
EMRS S	EMRS S	Stockpile - Mix of OVB & PAG, high OVB pct. (18 m avg.)	N/A	N/A	N/A	18	N/A	424349.58	5410746.42	Cadmium and Cadmium Compounds	7440-43-9	1.86E-05	24	EF	Eq. 18	M	15.86%	Y	Y	
EMRS S	EMRS S	Stockpile - Mix of OVB & PAG, high OVB pct. (18 m avg.)	N/A	N/A	N/A	18	N/A	424349.58	5410746.42	Cerium	7440-45-1	8.09E-05	24	EF	Eq. 18	M	15.86%	N	N	
EMRS S	EMRS S	Stockpile - Mix of OVB & PAG, high OVB pct. (18 m avg.)	N/A	N/A	N/A	18	N/A	424349.58	5410746.42	Cobalt	7440-48-4	4.56E-05	24	EF	Eq. 18	M	15.84%	Y	Y	
EMRS S	EMRS S	Stockpile - Mix of OVB & PAG, high OVB pct. (18 m avg.)	N/A	N/A	N/A	18	N/A	424349.58	5410746.42	Chromium Compounds (metallic, divalent and trivalent forms)	7440-47-3	3.78E-04	24	EF	Eq. 18	M	15.85%	Y	Y	
EMRS S	EMRS S	Stockpile - Mix of OVB & PAG, high OVB pct. (18 m avg.)	N/A	N/A	N/A	18	N/A	424349.58	5410746.42	Cesium	7440-46-2	7.56E-06	N/A	EF	Eq. 18	M	15.86%	Y	Y	
EMRS S	EMRS S	Stockpile - Mix of OVB & PAG, high OVB pct. (18 m avg.)	N/A	N/A	N/A	18	N/A	424349.58	5410746.42	Copper	7440-50-8	3.41E-04	24	EF	Eq. 18	M	15.86%	N	N	
EMRS S	EMRS S	Stockpile - Mix of OVB & PAG, high OVB pct. (18 m avg.)	N/A	N/A	N/A	18	N/A	424349.58	5410746.42	Iron (metallic)	7439-89-6	8.63E-02	24	EF	Eq. 18	M	15.86%	Y	Y	
EMRS S	EMRS S	Stockpile - Mix of OVB & PAG, high OVB pct. (18 m avg.)	N/A	N/A	N/A	18	N/A	424349.58	5410746.42	Gallium	7440-55-3	1.04E-05	N/A	EF	Eq. 18	M	15.86%	Y	Y	
EMRS S	EMRS S	Stockpile - Mix of OVB & PAG, high OVB pct. (18 m avg.)	N/A	N/A	N/A	18	N/A	424349.58	5410746.42	Germanium	7440-56-4	2.07E-07	N/A	EF	Eq. 18	M	15.86%	N	N	
EMRS S	EMRS S	Stockpile - Mix of OVB & PAG, high OVB pct. (18 m avg.)	N/A	N/A	N/A	18	N/A	424349.58	5410746.42	Hafnium	7440-58-6	5.18E-07	24	EF	Eq. 18	M	15.86%	N	N	
EMRS S	EMRS S	Stockpile - Mix of OVB & PAG, high OVB pct. (18 m avg.)	N/A	N/A	N/A	18	N/A	424349.58	5410746.42	Mercury (Hg)	7439-97-6	4.14E-06	24	EF	Eq. 18	M	15.86%	N	N	
EMRS S	EMRS S	Stockpile - Mix of OVB & PAG, high OVB pct. (18 m avg.)	N/A	N/A	N/A	18	N/A	424349.58	5410746.42	Indium	7440-74-6	4.14E-07	24	EF	Eq. 18	M	15.86%	N	N	
EMRS S	EMRS S	Stockpile - Mix of OVB & PAG, high OVB pct. (18 m avg.)	N/A	N/A	N/A	18	N/A	424349.58	5410746.42	Potassium	7440-09-7	2.00E-02	24	EF	Eq. 18	M	15.86%	Y	Y	
EMRS S	EMRS S	Stockpile - Mix of OVB & PAG, high OVB pct. (18 m avg.)	N/A	N/A	N/A	18	N/A	424349.58	5410746.42	Lanthanum	7439-91-0	4.77E-05	N/A	EF	Eq. 18	M	15.86%	Y	Y	

EMRS S	EMRS S	Stockpile - Mix of OVB & PAG, high OVB pct. (18 m avg.)	N/A	N/A	N/A	18	N/A	424349.58	5410746.42	Lithium (other than hydrides)	7439-93-2	8.17E-05	24	EF	Eq. 18	M	15.86%	N	N	
EMRS S	EMRS S	Stockpile - Mix of OVB & PAG, high OVB pct. (18 m avg.)	N/A	N/A	N/A	18	N/A	424349.58	5410746.42	Lutetium	7439-94-3	2.07E-07	N/A	EF	Eq. 18	M	15.86%	N	N	
EMRS S	EMRS S	Stockpile - Mix of OVB & PAG, high OVB pct. (18 m avg.)	N/A	N/A	N/A	18	N/A	424349.58	5410746.42	Magnesium	7439-95-4	2.94E-02	24	EF	Eq. 18	M	15.86%	Y	Y	
EMRS S	EMRS S	Stockpile - Mix of OVB & PAG, high OVB pct. (18 m avg.)	N/A	N/A	N/A	18	N/A	424349.58	5410746.42	Manganese and Manganese Compounds	7439-96-5	1.67E-03	24	EF	Eq. 18	M	15.41%	Y	Y	
EMRS S	EMRS S	Stockpile - Mix of OVB & PAG, high OVB pct. (18 m avg.)	N/A	N/A	N/A	18	N/A	424349.58	5410746.42	Molybdenum	7439-98-7	1.24E-05	24	EF	Eq. 18	M	15.86%	N	N	
EMRS S	EMRS S	Stockpile - Mix of OVB & PAG, high OVB pct. (18 m avg.)	N/A	N/A	N/A	18	N/A	424349.58	5410746.42	Sodium	7440-23-5	3.31E-03	N/A	EF	Eq. 18	M	15.86%	Y	Y	
EMRS S	EMRS S	Stockpile - Mix of OVB & PAG, high OVB pct. (18 m avg.)	N/A	N/A	N/A	18	N/A	424349.58	5410746.42	Niobium	7440-03-1	2.59E-06	24	EF	Eq. 18	M	15.86%	N	N	
EMRS S	EMRS S	Stockpile - Mix of OVB & PAG, high OVB pct. (18 m avg.)	N/A	N/A	N/A	18	N/A	424349.58	5410746.42	Nickel and Nickel Compounds	7440-02-0	1.19E-04	8760	EF	Eq. 18	M	15.83%	Y	Y	
EMRS S	EMRS S	Stockpile - Mix of OVB & PAG, high OVB pct. (18 m avg.)	N/A	N/A	N/A	18	N/A	424349.58	5410746.42	Phosphorus	7723-14-0	8.29E-04	24	EF	Eq. 18	M	15.86%	Y	Y	
EMRS S	EMRS S	Stockpile - Mix of OVB & PAG, high OVB pct. (18 m avg.)	N/A	N/A	N/A	18	N/A	424349.58	5410746.42	Lead and Lead Compounds	7439-92-1	2.25E-04	24	EF	Eq. 18	M	15.86%	Y	Y	
EMRS S	EMRS S	Stockpile - Mix of OVB & PAG, high OVB pct. (18 m avg.)	N/A	N/A	N/A	18	N/A	424349.58	5410746.42	Lead and Lead Compounds	7439-92-1	2.25E-04	720	EF	Eq. 18	M	15.86%	Y	Y	
EMRS S	EMRS S	Stockpile - Mix of OVB & PAG, high OVB pct. (18 m avg.)	N/A	N/A	N/A	18	N/A	424349.58	5410746.42	Rubidium	7440-17-7	2.30E-05	24	EF	Eq. 18	M	15.86%	N	N	
EMRS S	EMRS S	Stockpile - Mix of OVB & PAG, high OVB pct. (18 m avg.)	N/A	N/A	N/A	18	N/A	424349.58	5410746.42	Rhenium	7440-15-5	5.18E-06	N/A	EF	Eq. 18	M	15.86%	Y	Y	
EMRS S	EMRS S	Stockpile - Mix of OVB & PAG, high OVB pct. (18 m avg.)	N/A	N/A	N/A	18	N/A	424349.58	5410746.42	Antimony	7440-36-0	1.14E-05	24	EF	Eq. 18	M	15.86%	N	N	
EMRS S	EMRS S	Stockpile - Mix of OVB & PAG, high OVB pct. (18 m avg.)	N/A	N/A	N/A	18	N/A	424349.58	5410746.42	Scandium	7440-20-2	1.86E-05	N/A	EF	Eq. 18	M	15.86%	Y	Y	
EMRS S	EMRS S	Stockpile - Mix of OVB & PAG, high OVB pct. (18 m avg.)	N/A	N/A	N/A	18	N/A	424349.58	5410746.42	Selenium	7782-49-2	1.76E-05	24	EF	Eq. 18	M	15.86%	N	N	
EMRS S	EMRS S	Stockpile - Mix of OVB & PAG, high OVB pct. (18 m avg.)	N/A	N/A	N/A	18	N/A	424349.58	5410746.42	Tin	7440-31-5	2.28E-05	24	EF	Eq. 18	M	15.86%	N	N	
EMRS S	EMRS S	Stockpile - Mix of OVB & PAG, high OVB pct. (18 m avg.)	N/A	N/A	N/A	18	N/A	424349.58	5410746.42	Strontium	7440-24-6	2.52E-04	24	EF	Eq. 18	M	15.86%	N	N	
EMRS S	EMRS S	Stockpile - Mix of OVB & PAG, high OVB pct. (18 m avg.)	N/A	N/A	N/A	18	N/A	424349.58	5410746.42	Tantalum	7440-25-7	1.04E-07	24	EF	Eq. 18	M	15.86%	N	N	
EMRS S	EMRS S	Stockpile - Mix of OVB & PAG, high OVB pct. (18 m avg.)	N/A	N/A	N/A	18	N/A	424349.58	5410746.42	Terbium	7440-27-9	4.14E-07	N/A	EF	Eq. 18	M	15.86%	N	N	
EMRS S	EMRS S	Stockpile - Mix of OVB & PAG, high OVB pct. (18 m avg.)	N/A	N/A	N/A	18	N/A	424349.58	5410746.42	Tellurium (except hydrogen telluride)	13494-80-9	2.90E-05	24	EF	Eq. 18	M	15.86%	N	N	
EMRS S	EMRS S	Stockpile - Mix of OVB & PAG, high OVB pct. (18 m avg.)	N/A	N/A	N/A	18	N/A	424349.58	5410746.42	Thorium	7440-29-1	2.07E-05	N/A	EF	Eq. 18	M	15.86%	Y	Y	
EMRS S	EMRS S	Stockpile - Mix of OVB & PAG, high OVB pct. (18 m avg.)	N/A	N/A	N/A	18	N/A	424349.58	5410746.42	Titanium	7440-32-6	4.35E-03	24	EF	Eq. 18	M	15.86%	Y	Y	
EMRS S	EMRS S	Stockpile - Mix of OVB & PAG, high OVB pct. (18 m avg.)	N/A	N/A	N/A	18	N/A	424349.58	5410746.42	Thallium	7440-28-0	1.04E-05	24	EF	Eq. 18	M	15.86%	Y	Y	
EMRS S	EMRS S	Stockpile - Mix of OVB & PAG, high OVB pct. (18 m avg.)	N/A	N/A	N/A	18	N/A	424349.58	5410746.42	Uranium and Uranium Compounds - U in PM10	7440-61-1	2.07E-05	8760	EF	Eq. 18	M	15.86%	Y	Y	
EMRS S	EMRS S	Stockpile - Mix of OVB & PAG, high OVB pct. (18 m avg.)	N/A	N/A	N/A	18	N/A	424349.58	5410746.42	Vanadium	7440-62-2	1.66E-04	24	EF	Eq. 18	M	15.86%	Y	Y	
EMRS S	EMRS S	Stockpile - Mix of OVB & PAG, high OVB pct. (18 m avg.)	N/A	N/A	N/A	18	N/A	424349.58	5410746.42	Tungsten	7440-33-7	3.87E-05	24	EF	Eq. 18	M	15.86%	N	N	
EMRS S	EMRS S	Stockpile - Mix of OVB & PAG, high OVB pct. (18 m avg.)	N/A	N/A	N/A	18	N/A	424349.58	5410746.42	Yttrium	7440-65-5	1.13E-05	24	EF	Eq. 18	M	15.86%	N	N	
EMRS S	EMRS S	Stockpile - Mix of OVB & PAG, high OVB pct. (18 m avg.)	N/A	N/A	N/A	18	N/A	424349.58	5410746.42	Ytterbium	7440-64-4	1.14E-06	N/A	EF	Eq. 18	M	15.86%	N	N	
EMRS S	EMRS S	Stockpile - Mix of OVB & PAG, high OVB pct. (18 m avg.)	N/A	N/A	N/A	18	N/A	424349.58	5410746.42	Zinc	7440-66-6	2.64E-03	24	EF	Eq. 18	M	15.86%	Y	Y	
EMRS S	EMRS S	Stockpile - Mix of OVB & PAG, high OVB pct. (18 m avg.)	N/A	N/A	N/A	18	N/A	424349.58	5410746.42	Zirconium	7440-67-7	2.64E-03	24	EF	Eq. 18	M	15.86%	Y	Y	
EMRS N	EMRS N	Stockpile - Mix of OVB & PAG, high OVB pct.	N/A	N/A	N/A	N/A	N/A	N/A	N/A	Suspended particulate matter	N/A-TSP	4.39E-01	24	EF	Eq. 18	M	1.82%	Y	N	
EMRS N	EMRS N	Stockpile - Mix of OVB & PAG, high OVB pct.	N/A	N/A	N/A	N/A	N/A	N/A	N/A	Silver	7440-22-4	2.47E-06	24	EF	Eq. 18	M	4.61%	N	N	
EMRS N	EMRS N	Stockpile - Mix of OVB & PAG, high OVB pct.	N/A	N/A	N/A	N/A	N/A	N/A	N/A	Aluminum	7429-90-5	2.08E-02	24	EF	Eq. 18	M	4.61%	Y	N	
EMRS N	EMRS N	Stockpile - Mix of OVB & PAG, high OVB pct.	N/A	N/A	N/A	N/A	N/A	N/A	N/A	Arsenic and compounds	7440-38-2	4.17E-05	24	EF	Eq. 18	M	4.61%	Y	N	
EMRS N	EMRS N	Stockpile - Mix of OVB & PAG, high OVB pct.	N/A	N/A	N/A	N/A	N/A	N/A	N/A	Gold	7440-57-5	4.51E-07	24	EF	Eq. 18	M	4.61%	N	N	
EMRS N	EMRS N	Stockpile - Mix of OVB & PAG, high OVB pct.	N/A	N/A	N/A	N/A	N/A	N/A	N/A	Boron	7440-42-8	1.65E-05	24	EF	Eq. 18	M	4.61%	N	N	
EMRS N	EMRS N	Stockpile - Mix of OVB & PAG, high OVB pct.	N/A	N/A	N/A	N/A	N/A	N/A	N/A	Barium - total water soluble	7440-39-3	9.62E-05	24	EF	Eq. 18	M	4.61%	Y	N	
EMRS N	EMRS N	Stockpile - Mix of OVB & PAG, high OVB pct.	N/A	N/A	N/A	N/A	N/A	N/A	N/A	Beryllium and Beryllium Compounds	7440-41-7	6.01E-07	24	EF	Eq. 18	M	4.61%	Y	N	
EMRS N	EMRS N	Stockpile - Mix of OVB & PAG, high OVB pct.	N/A	N/A	N/A	N/A	N/A	N/A	N/A	Bismuth	7440-69-9	7.52E-06	24	EF	Eq. 18	M	4.61%	N	N	
EMRS N	EMRS N	Stockpile - Mix of OVB & PAG, high OVB pct.	N/A	N/A	N/A	N/A	N/A	N/A	N/A	Calcium carbonate	471-34-1	1.55E-02	24	EF	Eq. 18	M	4.61%	Y	N	
EMRS N	EMRS N	Stockpile - Mix of OVB & PAG, high OVB pct.	N/A	N/A	N/A	N/A	N/A	N/A	N/A	Cadmium and Cadmium Compounds	7440-43-9	5.41E-06	24	EF	Eq. 18	M	4.61%	Y	N	
EMRS N	EMRS N	Stockpile - Mix of OVB & PAG, high OVB pct.	N/A	N/A	N/A	N/A	N/A	N/A	N/A	Cerium	7440-45-1	2.35E-05	24	EF	Eq. 18	M	4.61%	N	N	
EMRS N	EMRS N	Stockpile - Mix of OVB & PAG, high OVB pct.	N/A	N/A	N/A	N/A	N/A	N/A	N/A	Cobalt	7440-48-4	1.32E-05	24	EF	Eq. 18	M	4.60%	Y	N	
EMRS N	EMRS N	Stockpile - Mix of OVB & PAG, high OVB pct.	N/A	N/A	N/A	N/A	N/A	N/A	N/A	Chromium Compounds (metallic, divalent and trivalent forms)	7440-47-3	1.10E-04	24	EF	Eq. 18	M	4.60%	Y	N	
EMRS N	EMRS N	Stockpile - Mix of OVB & PAG, high OVB pct.	N/A	N/A	N/A	N/A	N/A	N/A	N/A	Cesium	7440-46-2	2.20E-06	N/A	EF	Eq. 18	M	4.61%	Y	N	
EMRS N	EMRS N	Stockpile - Mix of OVB & PAG, high OVB pct.	N/A	N/A	N/A	N/A	N/A	N/A	N/A	Copper	7440-50-8	9.91E-05	24	EF	Eq. 18	M	4.61%	N	N	
EMRS N	EMRS N	Stockpile - Mix of OVB & PAG, high OVB pct.	N/A	N/A	N/A	N/A	N/A	N/A	N/A	Iron (metallic)	7439-89-6	2.51E-02	24	EF	Eq. 18	M	4.61%	Y	N	
EMRS N	EMRS N	Stockpile - Mix of OVB & PAG, high OVB pct.	N/A	N/A	N/A	N/A	N/A	N/A	N/A	Gallium	7440-55-3	3.01E-06	N/A	EF	Eq. 18	M	4.61%	Y	N	
EMRS N	EMRS N	Stockpile - Mix of OVB & PAG, high OVB pct.	N/A	N/A	N/A	N/A	N/A	N/A	N/A	Germanium	7440-56-4	6.01E-08	N/A	EF	Eq. 18	M	4.61%	N	N	
EMRS N	EMRS N	Stockpile - Mix of OVB & PAG, high OVB pct.	N/A	N/A	N/A	N/A	N/A	N/A	N/A	Hafnium	7440-58-6	1.50E-07	24	EF	Eq. 18	M	4.61%	N	N	
EMRS N	EMRS N	Stockpile - Mix of OVB & PAG, high OVB pct.	N/A	N/A	N/A	N/A	N/A	N/A	N/A	Mercury (Hg)	7439-97-6	1.20E-06	24	EF	Eq. 18	M	4.61%	N	N	
EMRS N	EMRS N	Stockpile - Mix of OVB & PAG, high OVB pct.	N/A	N/A	N/A	N/A	N/A	N/A	N/A	Indium	7440-74-6	1.20E-07	24	EF	Eq. 18	M	4.61%	N	N	
EMRS N	EMRS N	Stockpile - Mix of OVB & PAG, high OVB pct.	N/A	N/A	N/A	N/A	N/A	N/A	N/A	Potassium	7440-09-7	5.80E-03	24	EF	Eq. 18	M	4.61%	Y	N	
EMRS N	EMRS N	Stockpile - Mix of OVB & PAG, high OVB pct.	N/A	N/A	N/A	N/A	N/A	N/A	N/A	Lanthanum	7439-91-0	1.39E-05	N/A	EF	Eq. 18	M	4.61%	Y	N	

EMRS N	EMRS N	Stockpile - Mix of OVB & PAG, high OVB pct.	N/A	N/A	N/A	N/A	N/A	N/A	N/A	Lithium (other than hydrides)	7439-93-2	2.37E-05	24	EF	Eq. 18	M	4.61%	N	N	
EMRS N	EMRS N	Stockpile - Mix of OVB & PAG, high OVB pct.	N/A	N/A	N/A	N/A	N/A	N/A	N/A	Lutetium	7439-94-3	6.01E-08	N/A	EF	Eq. 18	M	4.61%	N	N	
EMRS N	EMRS N	Stockpile - Mix of OVB & PAG, high OVB pct.	N/A	N/A	N/A	N/A	N/A	N/A	N/A	Magnesium	7439-95-4	8.54E-03	24	EF	Eq. 18	M	4.61%	Y	N	
EMRS N	EMRS N	Stockpile - Mix of OVB & PAG, high OVB pct.	N/A	N/A	N/A	N/A	N/A	N/A	N/A	Manganese and Manganese Compounds	7439-96-5	4.84E-04	24	EF	Eq. 18	M	4.47%	Y	N	
EMRS N	EMRS N	Stockpile - Mix of OVB & PAG, high OVB pct.	N/A	N/A	N/A	N/A	N/A	N/A	N/A	Molybdenum	7439-98-7	3.61E-06	24	EF	Eq. 18	M	4.61%	N	N	
EMRS N	EMRS N	Stockpile - Mix of OVB & PAG, high OVB pct.	N/A	N/A	N/A	N/A	N/A	N/A	N/A	Sodium	7440-23-5	9.62E-04	N/A	EF	Eq. 18	M	4.61%	Y	N	
EMRS N	EMRS N	Stockpile - Mix of OVB & PAG, high OVB pct.	N/A	N/A	N/A	N/A	N/A	N/A	N/A	Niobium	7440-03-1	7.52E-07	24	EF	Eq. 18	M	4.61%	N	N	
EMRS N	EMRS N	Stockpile - Mix of OVB & PAG, high OVB pct.	N/A	N/A	N/A	N/A	N/A	N/A	N/A	Nickel and Nickel Compounds	7440-02-0	3.46E-05	8760	EF	Eq. 18	M	4.60%	Y	N	
EMRS N	EMRS N	Stockpile - Mix of OVB & PAG, high OVB pct.	N/A	N/A	N/A	N/A	N/A	N/A	N/A	Phosphorus	7723-14-0	2.41E-04	24	EF	Eq. 18	M	4.61%	Y	N	
EMRS N	EMRS N	Stockpile - Mix of OVB & PAG, high OVB pct.	N/A	N/A	N/A	N/A	N/A	N/A	N/A	Lead and Lead Compounds	7439-92-1	6.54E-05	24	EF	Eq. 18	M	4.61%	Y	N	
EMRS N	EMRS N	Stockpile - Mix of OVB & PAG, high OVB pct.	N/A	N/A	N/A	N/A	N/A	N/A	N/A	Lead and Lead Compounds	7439-92-1	6.54E-05	720	EF	Eq. 18	M	4.61%	Y	N	
EMRS N	EMRS N	Stockpile - Mix of OVB & PAG, high OVB pct.	N/A	N/A	N/A	N/A	N/A	N/A	N/A	Rubidium	7440-17-7	6.68E-06	24	EF	Eq. 18	M	4.61%	N	N	
EMRS N	EMRS N	Stockpile - Mix of OVB & PAG, high OVB pct.	N/A	N/A	N/A	N/A	N/A	N/A	N/A	Rhenium	7440-15-5	1.50E-06	N/A	EF	Eq. 18	M	4.61%	Y	N	
EMRS N	EMRS N	Stockpile - Mix of OVB & PAG, high OVB pct.	N/A	N/A	N/A	N/A	N/A	N/A	N/A	Antimony	7440-36-0	3.31E-06	24	EF	Eq. 18	M	4.61%	N	N	
EMRS N	EMRS N	Stockpile - Mix of OVB & PAG, high OVB pct.	N/A	N/A	N/A	N/A	N/A	N/A	N/A	Scandium	7440-20-2	5.41E-06	N/A	EF	Eq. 18	M	4.61%	Y	N	
EMRS N	EMRS N	Stockpile - Mix of OVB & PAG, high OVB pct.	N/A	N/A	N/A	N/A	N/A	N/A	N/A	Selenium	7782-49-2	5.11E-06	24	EF	Eq. 18	M	4.61%	N	N	
EMRS N	EMRS N	Stockpile - Mix of OVB & PAG, high OVB pct.	N/A	N/A	N/A	N/A	N/A	N/A	N/A	Tin	7440-31-5	6.62E-06	24	EF	Eq. 18	M	4.61%	N	N	
EMRS N	EMRS N	Stockpile - Mix of OVB & PAG, high OVB pct.	N/A	N/A	N/A	N/A	N/A	N/A	N/A	Strontium	7440-24-6	7.31E-05	24	EF	Eq. 18	M	4.61%	N	N	
EMRS N	EMRS N	Stockpile - Mix of OVB & PAG, high OVB pct.	N/A	N/A	N/A	N/A	N/A	N/A	N/A	Tantalum	7440-25-7	3.01E-08	24	EF	Eq. 18	M	4.61%	N	N	
EMRS N	EMRS N	Stockpile - Mix of OVB & PAG, high OVB pct.	N/A	N/A	N/A	N/A	N/A	N/A	N/A	Terbium	7440-27-9	1.20E-07	N/A	EF	Eq. 18	M	4.61%	N	N	
EMRS N	EMRS N	Stockpile - Mix of OVB & PAG, high OVB pct.	N/A	N/A	N/A	N/A	N/A	N/A	N/A	Tellurium (except hydrogen telluride)	13494-80-9	8.42E-06	24	EF	Eq. 18	M	4.61%	N	N	
EMRS N	EMRS N	Stockpile - Mix of OVB & PAG, high OVB pct.	N/A	N/A	N/A	N/A	N/A	N/A	N/A	Thorium	7440-29-1	6.01E-06	N/A	EF	Eq. 18	M	4.61%	Y	N	
EMRS N	EMRS N	Stockpile - Mix of OVB & PAG, high OVB pct.	N/A	N/A	N/A	N/A	N/A	N/A	N/A	Titanium	7440-32-6	1.26E-03	24	EF	Eq. 18	M	4.61%	Y	N	
EMRS N	EMRS N	Stockpile - Mix of OVB & PAG, high OVB pct.	N/A	N/A	N/A	N/A	N/A	N/A	N/A	Thallium	7440-28-0	3.01E-06	24	EF	Eq. 18	M	4.61%	Y	N	
EMRS N	EMRS N	Stockpile - Mix of OVB & PAG, high OVB pct.	N/A	N/A	N/A	N/A	N/A	N/A	N/A	Uranium and Uranium Compounds - U in PM10	7440-61-1	6.01E-06	8760	EF	Eq. 18	M	4.61%	Y	N	
EMRS N	EMRS N	Stockpile - Mix of OVB & PAG, high OVB pct.	N/A	N/A	N/A	N/A	N/A	N/A	N/A	Vanadium	7440-62-2	4.81E-05	24	EF	Eq. 18	M	4.61%	Y	N	
EMRS N	EMRS N	Stockpile - Mix of OVB & PAG, high OVB pct.	N/A	N/A	N/A	N/A	N/A	N/A	N/A	Tungsten	7440-33-7	1.12E-05	24	EF	Eq. 18	M	4.61%	N	N	
EMRS N	EMRS N	Stockpile - Mix of OVB & PAG, high OVB pct.	N/A	N/A	N/A	N/A	N/A	N/A	N/A	Yttrium	7440-65-5	3.28E-06	24	EF	Eq. 18	M	4.61%	N	N	
EMRS N	EMRS N	Stockpile - Mix of OVB & PAG, high OVB pct.	N/A	N/A	N/A	N/A	N/A	N/A	N/A	Ytterbium	7440-64-4	3.31E-07	N/A	EF	Eq. 18	M	4.61%	N	N	
EMRS N	EMRS N	Stockpile - Mix of OVB & PAG, high OVB pct.	N/A	N/A	N/A	N/A	N/A	N/A	N/A	Zinc	7440-66-6	7.67E-04	24	EF	Eq. 18	M	4.61%	Y	N	
EMRS N	EMRS N	Stockpile - Mix of OVB & PAG, high OVB pct.	N/A	N/A	N/A	N/A	N/A	N/A	N/A	Zirconium	7440-67-7	7.67E-04	24	EF	Eq. 18	M	4.61%	Y	N	
BTR	BTR	Stockpile - PAG Buttress	N/A	N/A	N/A	N/A	N/A	N/A	N/A	Suspended particulate matter	N/A-TSP	4.15E-01	24	EF	Eq. 18	M	1.72%	Y	N	
BTR	BTR	Stockpile - PAG Buttress	N/A	N/A	N/A	N/A	N/A	N/A	N/A	Silver	7440-22-4	2.33E-06	24	EF	Eq. 18	M	4.36%	N	N	
BTR	BTR	Stockpile - PAG Buttress	N/A	N/A	N/A	N/A	N/A	N/A	N/A	Aluminum	7429-90-5	1.97E-02	24	EF	Eq. 18	M	4.36%	Y	N	
BTR	BTR	Stockpile - PAG Buttress	N/A	N/A	N/A	N/A	N/A	N/A	N/A	Arsenic and compounds	7440-38-2	3.94E-05	24	EF	Eq. 18	M	4.36%	Y	N	
BTR	BTR	Stockpile - PAG Buttress	N/A	N/A	N/A	N/A	N/A	N/A	N/A	Gold	7440-57-5	4.27E-07	24	EF	Eq. 18	M	4.36%	N	N	
BTR	BTR	Stockpile - PAG Buttress	N/A	N/A	N/A	N/A	N/A	N/A	N/A	Boron	7440-42-8	1.56E-05	24	EF	Eq. 18	M	4.36%	N	N	
BTR	BTR	Stockpile - PAG Buttress	N/A	N/A	N/A	N/A	N/A	N/A	N/A	Barium - total water soluble	7440-39-3	9.10E-05	24	EF	Eq. 18	M	4.36%	Y	N	
BTR	BTR	Stockpile - PAG Buttress	N/A	N/A	N/A	N/A	N/A	N/A	N/A	Beryllium and Beryllium Compounds	7440-41-7	5.69E-07	24	EF	Eq. 18	M	4.36%	Y	N	
BTR	BTR	Stockpile - PAG Buttress	N/A	N/A	N/A	N/A	N/A	N/A	N/A	Bismuth	7440-69-9	7.11E-06	24	EF	Eq. 18	M	4.36%	N	N	
BTR	BTR	Stockpile - PAG Buttress	N/A	N/A	N/A	N/A	N/A	N/A	N/A	Calcium carbonate	471-34-1	1.47E-02	24	EF	Eq. 18	M	4.36%	Y	N	
BTR	BTR	Stockpile - PAG Buttress	N/A	N/A	N/A	N/A	N/A	N/A	N/A	Cadmium and Cadmium Compounds	7440-43-9	5.12E-06	24	EF	Eq. 18	M	4.36%	Y	N	
BTR	BTR	Stockpile - PAG Buttress	N/A	N/A	N/A	N/A	N/A	N/A	N/A	Cerium	7440-45-1	2.22E-05	24	EF	Eq. 18	M	4.36%	N	N	
BTR	BTR	Stockpile - PAG Buttress	N/A	N/A	N/A	N/A	N/A	N/A	N/A	Cobalt	7440-48-4	1.25E-05	24	EF	Eq. 18	M	4.35%	Y	N	
BTR	BTR	Stockpile - PAG Buttress	N/A	N/A	N/A	N/A	N/A	N/A	N/A	Chromium Compounds (metallic, divalent and trivalent forms)	7440-47-3	1.04E-04	24	EF	Eq. 18	M	4.36%	Y	N	
BTR	BTR	Stockpile - PAG Buttress	N/A	N/A	N/A	N/A	N/A	N/A	N/A	Cesium	7440-46-2	2.08E-06	N/A	EF	Eq. 18	M	4.36%	Y	N	
BTR	BTR	Stockpile - PAG Buttress	N/A	N/A	N/A	N/A	N/A	N/A	N/A	Copper	7440-50-8	9.38E-05	24	EF	Eq. 18	M	4.36%	N	N	
BTR	BTR	Stockpile - PAG Buttress	N/A	N/A	N/A	N/A	N/A	N/A	N/A	Iron (metallic)	7439-89-6	2.37E-02	24	EF	Eq. 18	M	4.36%	Y	N	
BTR	BTR	Stockpile - PAG Buttress	N/A	N/A	N/A	N/A	N/A	N/A	N/A	Gallium	7440-55-3	2.85E-06	N/A	EF	Eq. 18	M	4.36%	Y	N	
BTR	BTR	Stockpile - PAG Buttress	N/A	N/A	N/A	N/A	N/A	N/A	N/A	Germanium	7440-56-4	5.69E-08	N/A	EF	Eq. 18	M	4.36%	N	N	
BTR	BTR	Stockpile - PAG Buttress	N/A	N/A	N/A	N/A	N/A	N/A	N/A	Hafnium	7440-58-6	1.42E-07	24	EF	Eq. 18	M	4.36%	N	N	
BTR	BTR	Stockpile - PAG Buttress	N/A	N/A	N/A	N/A	N/A	N/A	N/A	Mercury (Hg)	7439-97-6	1.14E-06	24	EF	Eq. 18	M	4.36%	N	N	
BTR	BTR	Stockpile - PAG Buttress	N/A	N/A	N/A	N/A	N/A	N/A	N/A	Indium	7440-74-6	1.14E-07	24	EF	Eq. 18	M	4.36%	N	N	
BTR	BTR	Stockpile - PAG Buttress	N/A	N/A	N/A	N/A	N/A	N/A	N/A	Potassium	7440-09-7	5.49E-03	24	EF	Eq. 18	M	4.36%	Y	N	
BTR	BTR	Stockpile - PAG Buttress	N/A	N/A	N/A	N/A	N/A	N/A	N/A	Lanthanum	7439-91-0	1.31E-05	N/A	EF	Eq. 18	M	4.36%	Y	N	
BTR	BTR	Stockpile - PAG Buttress	N/A	N/A	N/A	N/A	N/A	N/A	N/A	Lithium (other than hydrides)	7439-93-2	2.24E-05	24	EF	Eq. 18	M	4.36%	N	N	
BTR	BTR	Stockpile - PAG Buttress	N/A	N/A	N/A	N/A	N/A	N/A	N/A	Lutetium	7439-94-3	5.69E-08	N/A	EF	Eq. 18	M	4.36%	N	N	
BTR	BTR	Stockpile - PAG Buttress	N/A	N/A	N/A	N/A	N/A	N/A	N/A	Magnesium	7439-95-4	8.08E-03	24	EF	Eq. 18	M	4.36%	Y	N	
BTR	BTR	Stockpile - PAG Buttress	N/A	N/A	N/A	N/A	N/A	N/A	N/A	Manganese and Manganese Compounds	7439-96-5	4.58E-04	24	EF	Eq. 18	M	4.23%	Y	N	
BTR	BTR	Stockpile - PAG Buttress	N/A	N/A	N/A	N/A	N/A	N/A	N/A	Molybdenum	7439-98-7	3.41E-06	24	EF	Eq. 18	M	4.36%	N	N	
BTR	BTR	Stockpile - PAG Buttress	N/A	N/A	N/A	N/A	N/A	N/A	N/A	Sodium	7440-23-5	9.10E-04	N/A	EF	Eq. 18	M	4.36%	Y	N	
BTR	BTR	Stockpile - PAG Buttress	N/A	N/A	N/A	N/A	N/A	N/A	N/A	Niobium	7440-03-1	7.11E-07	24	EF	Eq. 18	M	4.36%	N	N	
BTR	BTR	Stockpile - PAG Buttress	N/A	N/A	N/A	N/A	N/A	N/A	N/A	Nickel and Nickel Compounds	7440-02-0	3.27E-05	8760	EF	Eq. 18	M	4.35%	Y	N	
BTR	BTR	Stockpile - PAG Buttress	N/A	N/A	N/A	N/A	N/A	N/A	N/A	Phosphorus	7723-14-0	2.28E-04	24	EF	Eq. 18	M	4.36%	Y	N	
BTR	BTR	Stockpile - PAG Buttress	N/A	N/A	N/A	N/A	N/A	N/A	N/A	Lead and Lead Compounds	7439-92-1	6.19E-05	24	EF	Eq. 18	M	4.36%	Y	N	
BTR	BTR	Stockpile - PAG Buttress	N/A	N/A	N/A	N/A	N/A	N/A	N/A	Lead and Lead Compounds	7439-92-1	6.19E-05	720	EF	Eq. 18	M	4.36%	Y	N	
BTR	BTR	Stockpile - PAG Buttress	N/A	N/A	N/A	N/A	N/A	N/A	N/A	Rubidium	7440-17-7	6.32E-06	24	EF	Eq. 18	M	4.36%	N	N	
BTR	BTR	Stockpile - PAG Buttress	N/A	N/A	N/A	N/A	N/A	N/A	N/A	Rhenium	7440-15-5	1.42E-06	N/A	EF	Eq. 18	M	4.36%	Y	N	
BTR	BTR	Stockpile - PAG Buttress	N/A	N/A	N/A	N/A	N/A	N/A	N/A	Antimony	7440-36-0	3.13E-06	24	EF	Eq. 18	M	4.36%	N	N	
BTR	BTR	Stockpile - PAG Buttress	N/A	N/A	N/A	N/A	N/A	N/A	N/A	Scandium	7440-20-2	5.12E-06	N/A	EF	Eq. 18	M	4.36%	Y	N	
BTR	BTR	Stockpile - PAG Buttress	N/A	N/A	N/A	N/A	N/A	N/A	N/A	Selenium	7782-49-2	4.84E-06	24	EF	Eq. 18	M	4.36%	N	N	
BTR	BTR	Stockpile - PAG Buttress	N/A	N/A	N/A	N/A	N/A	N/A	N/A	Tin	7440-31-5	6.26E-06	24	EF	Eq. 18	M	4.36%	N	N	
BTR	BTR	Stockpile - PAG Buttress	N/A	N/A	N/A	N/A	N/A	N/A	N/A	Strontium	7440-24-6	6.91E-05	24	EF	Eq. 18	M	4.36%	N	N	
BTR	BTR	Stockpile - PAG Buttress	N/A	N/A	N/A	N/A	N/A	N/A	N/A	Tantalum	7440-25-7	2.85E-08	24	EF	Eq. 18	M	4.36%	N	N	
BTR	BTR	Stockpile - PAG Buttress	N/A	N/A	N/A	N/A	N/A	N/A	N/A	Terbium	7440-27-9	1.14E-07	N/A	EF	Eq. 18	M	4.36%	N	N	
BTR	BTR	Stockpile - PAG Buttress	N/A	N/A	N/A	N/A	N/A	N/A	N/A	Tellurium (except hydrogen telluride)	13494-80-9	7.97E-06	24	EF	Eq. 18	M	4.36%	N	N	
BTR	BTR	Stockpile - PAG Buttress	N/A	N/A	N/A	N/A	N/A	N/A	N/A	Thorium	7440-29-1	5.69E-06	N/A	EF	Eq. 18	M	4.36%	Y	N	
BTR	BTR	Stockpile - PAG Buttress	N/A	N/A	N/A	N/A	N/A	N/A	N/A	Titanium	7440-32-6	1.19E-03	24	EF	Eq. 18	M	4.36%	Y	N	
BTR	BTR	Stockpile - PAG Buttress	N/A	N/A	N/A	N/A	N/A	N/A	N/A	Thallium	7440-28-0	2.85E-06	24	EF	Eq. 18	M	4.36%	Y	N	
BTR	BTR	Stockpile - PAG Buttress	N/A	N/A	N/A	N/A	N/A	N/A	N/A	Uranium and Uranium Compounds - U in PM10	7440-61-1	5.69E-06	8760	EF	Eq. 18	M	4.36%	Y	N	

BTR	BTR	Stockpile - PAG Buttress	N/A	N/A	N/A	N/A	N/A	N/A	N/A	Vanadium	7440-62-2	4.55E-05	24	EF	Eq. 18	M	4.36%	Y	N	
BTR	BTR	Stockpile - PAG Buttress	N/A	N/A	N/A	N/A	N/A	N/A	N/A	Tungsten	7440-33-7	1.06E-05	24	EF	Eq. 18	M	4.36%	N	N	
BTR	BTR	Stockpile - PAG Buttress	N/A	N/A	N/A	N/A	N/A	N/A	N/A	Yttrium	7440-65-5	3.10E-06	24	EF	Eq. 18	M	4.36%	N	N	
BTR	BTR	Stockpile - PAG Buttress	N/A	N/A	N/A	N/A	N/A	N/A	N/A	Ytterbium	7440-64-4	3.13E-07	N/A	EF	Eq. 18	M	4.36%	N	N	
BTR	BTR	Stockpile - PAG Buttress	N/A	N/A	N/A	N/A	N/A	N/A	N/A	Zinc	7440-66-6	7.26E-04	24	EF	Eq. 18	M	4.36%	Y	N	
BTR	BTR	Stockpile - PAG Buttress	N/A	N/A	N/A	N/A	N/A	N/A	N/A	Zirconium	7440-67-7	7.26E-04	24	EF	Eq. 18	M	4.36%	Y	N	
MCL	MCL	Stockpile - Mix of OVB & PAG, high OVB pct.	N/A	N/A	N/A	N/A	N/A	N/A	N/A	Suspended particulate matter	N/A-TSP	1.47E-01	24	EF	Eq. 18	M	0.61%	Y	N	
MCL	MCL	Stockpile - Mix of OVB & PAG, high OVB pct.	N/A	N/A	N/A	N/A	N/A	N/A	N/A	Silver	7440-22-4	8.23E-07	24	EF	Eq. 18	M	1.54%	N	N	
MCL	MCL	Stockpile - Mix of OVB & PAG, high OVB pct.	N/A	N/A	N/A	N/A	N/A	N/A	N/A	Aluminum	7429-90-5	6.96E-03	24	EF	Eq. 18	M	1.54%	Y	N	
MCL	MCL	Stockpile - Mix of OVB & PAG, high OVB pct.	N/A	N/A	N/A	N/A	N/A	N/A	N/A	Arsenic and compounds	7440-38-2	1.39E-05	24	EF	Eq. 18	M	1.54%	Y	N	
MCL	MCL	Stockpile - Mix of OVB & PAG, high OVB pct.	N/A	N/A	N/A	N/A	N/A	N/A	N/A	Gold	7440-57-5	1.51E-07	24	EF	Eq. 18	M	1.54%	N	N	
MCL	MCL	Stockpile - Mix of OVB & PAG, high OVB pct.	N/A	N/A	N/A	N/A	N/A	N/A	N/A	Boron	7440-42-8	5.52E-06	24	EF	Eq. 18	M	1.54%	N	N	
MCL	MCL	Stockpile - Mix of OVB & PAG, high OVB pct.	N/A	N/A	N/A	N/A	N/A	N/A	N/A	Barium - total water soluble	7440-39-3	3.21E-05	24	EF	Eq. 18	M	1.54%	Y	N	
MCL	MCL	Stockpile - Mix of OVB & PAG, high OVB pct.	N/A	N/A	N/A	N/A	N/A	N/A	N/A	Beryllium and Beryllium Compounds	7440-41-7	2.01E-07	24	EF	Eq. 18	M	1.54%	Y	N	
MCL	MCL	Stockpile - Mix of OVB & PAG, high OVB pct.	N/A	N/A	N/A	N/A	N/A	N/A	N/A	Bismuth	7440-69-9	2.51E-06	24	EF	Eq. 18	M	1.54%	N	N	
MCL	MCL	Stockpile - Mix of OVB & PAG, high OVB pct.	N/A	N/A	N/A	N/A	N/A	N/A	N/A	Calcium carbonate	471-34-1	5.19E-03	24	EF	Eq. 18	M	1.54%	Y	N	
MCL	MCL	Stockpile - Mix of OVB & PAG, high OVB pct.	N/A	N/A	N/A	N/A	N/A	N/A	N/A	Cadmium and Cadmium Compounds	7440-43-9	1.81E-06	24	EF	Eq. 18	M	1.54%	Y	N	
MCL	MCL	Stockpile - Mix of OVB & PAG, high OVB pct.	N/A	N/A	N/A	N/A	N/A	N/A	N/A	Cerium	7440-45-1	7.84E-06	24	EF	Eq. 18	M	1.54%	N	N	
MCL	MCL	Stockpile - Mix of OVB & PAG, high OVB pct.	N/A	N/A	N/A	N/A	N/A	N/A	N/A	Cobalt	7440-48-4	4.42E-06	24	EF	Eq. 18	M	1.54%	Y	N	
MCL	MCL	Stockpile - Mix of OVB & PAG, high OVB pct.	N/A	N/A	N/A	N/A	N/A	N/A	N/A	Chromium Compounds (metallic, divalent and trivalent forms)	7440-47-3	3.66E-05	24	EF	Eq. 18	M	1.54%	Y	N	
MCL	MCL	Stockpile - Mix of OVB & PAG, high OVB pct.	N/A	N/A	N/A	N/A	N/A	N/A	N/A	Cesium	7440-46-2	7.33E-07	N/A	EF	Eq. 18	M	1.54%	Y	N	
MCL	MCL	Stockpile - Mix of OVB & PAG, high OVB pct.	N/A	N/A	N/A	N/A	N/A	N/A	N/A	Copper	7440-50-8	3.31E-05	24	EF	Eq. 18	M	1.54%	N	N	
MCL	MCL	Stockpile - Mix of OVB & PAG, high OVB pct.	N/A	N/A	N/A	N/A	N/A	N/A	N/A	Iron (metallic)	7439-89-6	8.36E-03	24	EF	Eq. 18	M	1.54%	Y	N	
MCL	MCL	Stockpile - Mix of OVB & PAG, high OVB pct.	N/A	N/A	N/A	N/A	N/A	N/A	N/A	Gallium	7440-55-3	1.00E-06	N/A	EF	Eq. 18	M	1.54%	Y	N	
MCL	MCL	Stockpile - Mix of OVB & PAG, high OVB pct.	N/A	N/A	N/A	N/A	N/A	N/A	N/A	Germanium	7440-56-4	2.01E-08	N/A	EF	Eq. 18	M	1.54%	N	N	
MCL	MCL	Stockpile - Mix of OVB & PAG, high OVB pct.	N/A	N/A	N/A	N/A	N/A	N/A	N/A	Hafnium	7440-58-6	5.02E-08	24	EF	Eq. 18	M	1.54%	N	N	
MCL	MCL	Stockpile - Mix of OVB & PAG, high OVB pct.	N/A	N/A	N/A	N/A	N/A	N/A	N/A	Mercury (Hg)	7439-97-6	4.02E-07	24	EF	Eq. 18	M	1.54%	N	N	
MCL	MCL	Stockpile - Mix of OVB & PAG, high OVB pct.	N/A	N/A	N/A	N/A	N/A	N/A	N/A	Indium	7440-74-6	4.02E-08	24	EF	Eq. 18	M	1.54%	N	N	
MCL	MCL	Stockpile - Mix of OVB & PAG, high OVB pct.	N/A	N/A	N/A	N/A	N/A	N/A	N/A	Potassium	7440-09-7	1.94E-03	24	EF	Eq. 18	M	1.54%	Y	N	
MCL	MCL	Stockpile - Mix of OVB & PAG, high OVB pct.	N/A	N/A	N/A	N/A	N/A	N/A	N/A	Lanthanum	7439-91-0	4.63E-06	N/A	EF	Eq. 18	M	1.54%	Y	N	
MCL	MCL	Stockpile - Mix of OVB & PAG, high OVB pct.	N/A	N/A	N/A	N/A	N/A	N/A	N/A	Lithium (other than hydrides)	7439-93-2	7.92E-06	24	EF	Eq. 18	M	1.54%	N	N	
MCL	MCL	Stockpile - Mix of OVB & PAG, high OVB pct.	N/A	N/A	N/A	N/A	N/A	N/A	N/A	Lutetium	7439-94-3	2.01E-08	N/A	EF	Eq. 18	M	1.54%	N	N	
MCL	MCL	Stockpile - Mix of OVB & PAG, high OVB pct.	N/A	N/A	N/A	N/A	N/A	N/A	N/A	Magnesium	7439-95-4	2.85E-03	24	EF	Eq. 18	M	1.54%	Y	N	
MCL	MCL	Stockpile - Mix of OVB & PAG, high OVB pct.	N/A	N/A	N/A	N/A	N/A	N/A	N/A	Manganese and Manganese Compounds	7439-96-5	1.62E-04	24	EF	Eq. 18	M	1.49%	Y	N	
MCL	MCL	Stockpile - Mix of OVB & PAG, high OVB pct.	N/A	N/A	N/A	N/A	N/A	N/A	N/A	Molybdenum	7439-98-7	1.20E-06	24	EF	Eq. 18	M	1.54%	N	N	
MCL	MCL	Stockpile - Mix of OVB & PAG, high OVB pct.	N/A	N/A	N/A	N/A	N/A	N/A	N/A	Sodium	7440-23-5	3.21E-04	N/A	EF	Eq. 18	M	1.54%	Y	N	
MCL	MCL	Stockpile - Mix of OVB & PAG, high OVB pct.	N/A	N/A	N/A	N/A	N/A	N/A	N/A	Niobium	7440-03-1	2.51E-07	24	EF	Eq. 18	M	1.54%	N	N	
MCL	MCL	Stockpile - Mix of OVB & PAG, high OVB pct.	N/A	N/A	N/A	N/A	N/A	N/A	N/A	Nickel and Nickel Compounds	7440-02-0	1.15E-05	8760	EF	Eq. 18	M	1.53%	Y	N	
MCL	MCL	Stockpile - Mix of OVB & PAG, high OVB pct.	N/A	N/A	N/A	N/A	N/A	N/A	N/A	Phosphorus	7723-14-0	8.03E-05	24	EF	Eq. 18	M	1.54%	Y	N	
MCL	MCL	Stockpile - Mix of OVB & PAG, high OVB pct.	N/A	N/A	N/A	N/A	N/A	N/A	N/A	Lead and Lead Compounds	7439-92-1	2.18E-05	24	EF	Eq. 18	M	1.54%	Y	N	
MCL	MCL	Stockpile - Mix of OVB & PAG, high OVB pct.	N/A	N/A	N/A	N/A	N/A	N/A	N/A	Lead and Lead Compounds	7439-92-1	2.18E-05	720	EF	Eq. 18	M	1.54%	Y	N	
MCL	MCL	Stockpile - Mix of OVB & PAG, high OVB pct.	N/A	N/A	N/A	N/A	N/A	N/A	N/A	Rubidium	7440-17-7	2.23E-06	24	EF	Eq. 18	M	1.54%	N	N	
MCL	MCL	Stockpile - Mix of OVB & PAG, high OVB pct.	N/A	N/A	N/A	N/A	N/A	N/A	N/A	Rhenium	7440-15-5	5.02E-07	N/A	EF	Eq. 18	M	1.54%	Y	N	
MCL	MCL	Stockpile - Mix of OVB & PAG, high OVB pct.	N/A	N/A	N/A	N/A	N/A	N/A	N/A	Antimony	7440-36-0	1.10E-06	24	EF	Eq. 18	M	1.54%	N	N	
MCL	MCL	Stockpile - Mix of OVB & PAG, high OVB pct.	N/A	N/A	N/A	N/A	N/A	N/A	N/A	Scandium	7440-20-2	1.81E-06	N/A	EF	Eq. 18	M	1.54%	Y	N	
MCL	MCL	Stockpile - Mix of OVB & PAG, high OVB pct.	N/A	N/A	N/A	N/A	N/A	N/A	N/A	Selenium	7782-49-2	1.71E-06	24	EF	Eq. 18	M	1.54%	N	N	
MCL	MCL	Stockpile - Mix of OVB & PAG, high OVB pct.	N/A	N/A	N/A	N/A	N/A	N/A	N/A	Tin	7440-31-5	2.21E-06	24	EF	Eq. 18	M	1.54%	N	N	
MCL	MCL	Stockpile - Mix of OVB & PAG, high OVB pct.	N/A	N/A	N/A	N/A	N/A	N/A	N/A	Strontium	7440-24-6	2.44E-05	24	EF	Eq. 18	M	1.54%	N	N	
MCL	MCL	Stockpile - Mix of OVB & PAG, high OVB pct.	N/A	N/A	N/A	N/A	N/A	N/A	N/A	Tantalum	7440-25-7	1.00E-08	24	EF	Eq. 18	M	1.54%	N	N	
MCL	MCL	Stockpile - Mix of OVB & PAG, high OVB pct.	N/A	N/A	N/A	N/A	N/A	N/A	N/A	Terbium	7440-27-9	4.02E-08	N/A	EF	Eq. 18	M	1.54%	N	N	
MCL	MCL	Stockpile - Mix of OVB & PAG, high OVB pct.	N/A	N/A	N/A	N/A	N/A	N/A	N/A	Tellurium (except hydrogen telluride)	13494-80-9	2.81E-06	24	EF	Eq. 18	M	1.54%	N	N	
MCL	MCL	Stockpile - Mix of OVB & PAG, high OVB pct.	N/A	N/A	N/A	N/A	N/A	N/A	N/A	Thorium	7440-29-1	2.01E-06	N/A	EF	Eq. 18	M	1.54%	Y	N	
MCL	MCL	Stockpile - Mix of OVB & PAG, high OVB pct.	N/A	N/A	N/A	N/A	N/A	N/A	N/A	Titanium	7440-32-6	4.22E-04	24	EF	Eq. 18	M	1.54%	Y	N	
MCL	MCL	Stockpile - Mix of OVB & PAG, high OVB pct.	N/A	N/A	N/A	N/A	N/A	N/A	N/A	Thallium	7440-28-0	1.00E-06	24	EF	Eq. 18	M	1.54%	Y	N	
MCL	MCL	Stockpile - Mix of OVB & PAG, high OVB pct.	N/A	N/A	N/A	N/A	N/A	N/A	N/A	Uranium and Uranium Compounds - U in PM10	7440-61-1	2.01E-06	8760	EF	Eq. 18	M	1.54%	Y	N	
MCL	MCL	Stockpile - Mix of OVB & PAG, high OVB pct.	N/A	N/A	N/A	N/A	N/A	N/A	N/A	Vanadium	7440-62-2	1.61E-05	24	EF	Eq. 18	M	1.54%	Y	N	
MCL	MCL	Stockpile - Mix of OVB & PAG, high OVB pct.	N/A	N/A	N/A	N/A	N/A	N/A	N/A	Tungsten	7440-33-7	3.76E-06	24	EF	Eq. 18	M	1.54%	N	N	
MCL	MCL	Stockpile - Mix of OVB & PAG, high OVB pct.	N/A	N/A	N/A	N/A	N/A	N/A	N/A	Yttrium	7440-65-5	1.09E-06	24	EF	Eq. 18	M	1.54%	N	N	
MCL	MCL	Stockpile - Mix of OVB & PAG, high OVB pct.	N/A	N/A	N/A	N/A	N/A	N/A	N/A	Ytterbium	7440-64-4	1.10E-07	N/A	EF	Eq. 18	M	1.54%	N	N	
MCL	MCL	Stockpile - Mix of OVB & PAG, high OVB pct.	N/A	N/A	N/A	N/A	N/A	N/A	N/A	Zinc	7440-66-6	2.56E-04	24	EF	Eq. 18	M	1.54%	Y	N	
MCL	MCL	Stockpile - Mix of OVB & PAG, high OVB pct.	N/A	N/A	N/A	N/A	N/A	N/A	N/A	Zirconium	7440-67-7	2.56E-04	24	EF	Eq. 18	M	1.54%	Y	N	
PAG_ROAD	ROAD	Stockpile - PAG Road	N/A	N/A	N/A	N/A	N/A	N/A	N/A	Suspended particulate matter	N/A-TSP	7.08E-03	24	EF	Eq. 18	M	0.03%	Y	N	
PAG_ROAD	ROAD	Stockpile - PAG Road	N/A	N/A	N/A	N/A	N/A	N/A	N/A	Silver	7440-22-4	3.97E-08	24	EF	Eq. 18	M	0.07%	N	N	
PAG_ROAD	ROAD	Stockpile - PAG Road	N/A	N/A	N/A	N/A	N/A	N/A	N/A	Aluminum	7429-90-5	3.36E-04	24	EF	Eq. 18	M	0.07%	Y	N	
PAG_ROAD	ROAD	Stockpile - PAG Road	N/A	N/A	N/A	N/A	N/A	N/A	N/A	Arsenic and compounds	7440-38-2	6.72E-07	24	EF	Eq. 18	M	0.07%	Y	N	
PAG_ROAD	ROAD	Stockpile - PAG Road	N/A	N/A	N/A	N/A	N/A	N/A	N/A	Gold	7440-57-5	7.27E-09	24	EF	Eq. 18	M	0.07%	N	N	
PAG_ROAD	ROAD	Stockpile - PAG Road	N/A	N/A	N/A	N/A	N/A	N/A	N/A	Boron	7440-42-8	2.67E-07	24	EF	Eq. 18	M	0.07%	N	N	
PAG_ROAD	ROAD	Stockpile - PAG Road	N/A	N/A	N/A	N/A	N/A	N/A	N/A	Barium - total water soluble	7440-39-3	1.55E-06	24	EF	Eq. 18	M	0.07%	Y	N	
PAG_ROAD	ROAD	Stockpile - PAG Road	N/A	N/A	N/A	N/A	N/A	N/A	N/A	Beryllium and Beryllium Compounds	7440-41-7	9.69E-09	24	EF	Eq. 18	M	0.07%	Y	N	
PAG_ROAD	ROAD	Stockpile - PAG Road	N/A	N/A	N/A	N/A	N/A	N/A	N/A	Bismuth	7440-69-9	1.21E-07	24	EF	Eq. 18	M	0.07%	N	N	
PAG_ROAD	ROAD	Stockpile - PAG Road	N/A	N/A	N/A	N/A	N/A	N/A	N/A	Calcium carbonate	471-34-1	2.51E-04	24	EF	Eq. 18	M	0.07%	Y	N	
PAG_ROAD	ROAD	Stockpile - PAG Road	N/A	N/A	N/A	N/A	N/A	N/A	N/A	Cadmium and Cadmium Compounds	7440-43-9	8.73E-08	24	EF	Eq. 18	M	0.07%	Y	N	
PAG_ROAD	ROAD	Stockpile - PAG Road	N/A	N/A	N/A	N/A	N/A	N/A	N/A	Cerium	7440-45-1	3.79E-07	24	EF	Eq. 18	M	0.07%	N	N	
PAG_ROAD	ROAD	Stockpile - PAG Road	N/A	N/A	N/A	N/A	N/A	N/A	N/A	Cobalt	7440-48-4	2.13E-07	24	EF	Eq. 18	M	0.07%	Y	N	
PAG_ROAD	ROAD	Stockpile - PAG Road	N/A	N/A	N/A	N/A	N/A	N/A	N/A	Chromium Compounds (metallic, divalent and trivalent forms)	7440-47-3	1.77E-06	24	EF	Eq. 18	M	0.07%	Y	N	
PAG_ROAD	ROAD	Stockpile - PAG Road	N/A	N/A	N/A	N/A	N/A	N/A	N/A	Cesium	7440-46-2	3.54E-08	N/A	EF	Eq. 18	M	0.07%	Y	N	
PAG_ROAD	ROAD	Stockpile - PAG Road	N/A	N/A	N/A	N/A	N/A	N/A	N/A	Copper	7440-50-8	1.60E-06	24	EF	Eq. 18	M	0.07%	N	N	
PAG_ROAD	ROAD	Stockpile - PAG Road	N/A	N/A	N/A	N/A	N/A	N/A	N/A	Iron (metallic)	7439-89-6	4.04E-04	24	EF	Eq. 18	M	0.07%	Y	N	
PAG_ROAD	ROAD	Stockpile - PAG Road	N/A	N/A	N/A	N/A	N/A	N/A	N/A	Gallium	7440-55-3	4.85E-08	N/A	EF	Eq. 18	M	0.07%	Y	N	

PAG_ROAD	ROAD	Stockpile - PAG Road	N/A	N/A	N/A	N/A	N/A	N/A	N/A	Germanium	7440-56-4	9.69E-10	N/A	EF	Eq. 18	M	0.07%	N	N	
PAG_ROAD	ROAD	Stockpile - PAG Road	N/A	N/A	N/A	N/A	N/A	N/A	N/A	Hafnium	7440-58-6	2.42E-09	24	EF	Eq. 18	M	0.07%	N	N	
PAG_ROAD	ROAD	Stockpile - PAG Road	N/A	N/A	N/A	N/A	N/A	N/A	N/A	Mercury (Hg)	7439-97-6	1.94E-08	24	EF	Eq. 18	M	0.07%	N	N	
PAG_ROAD	ROAD	Stockpile - PAG Road	N/A	N/A	N/A	N/A	N/A	N/A	N/A	Indium	7440-74-6	1.94E-09	24	EF	Eq. 18	M	0.07%	N	N	
PAG_ROAD	ROAD	Stockpile - PAG Road	N/A	N/A	N/A	N/A	N/A	N/A	N/A	Potassium	7440-09-7	9.36E-05	24	EF	Eq. 18	M	0.07%	Y	N	
PAG_ROAD	ROAD	Stockpile - PAG Road	N/A	N/A	N/A	N/A	N/A	N/A	N/A	Lanthanum	7439-91-0	2.23E-07	N/A	EF	Eq. 18	M	0.07%	Y	N	
PAG_ROAD	ROAD	Stockpile - PAG Road	N/A	N/A	N/A	N/A	N/A	N/A	N/A	Lithium (other than hydrides)	7439-93-2	3.82E-07	24	EF	Eq. 18	M	0.07%	N	N	
PAG_ROAD	ROAD	Stockpile - PAG Road	N/A	N/A	N/A	N/A	N/A	N/A	N/A	Lutetium	7439-94-3	9.69E-10	N/A	EF	Eq. 18	M	0.07%	N	N	
PAG_ROAD	ROAD	Stockpile - PAG Road	N/A	N/A	N/A	N/A	N/A	N/A	N/A	Magnesium	7439-95-4	1.38E-04	24	EF	Eq. 18	M	0.07%	Y	N	
PAG_ROAD	ROAD	Stockpile - PAG Road	N/A	N/A	N/A	N/A	N/A	N/A	N/A	Manganese and Manganese Compounds	7439-96-5	7.80E-06	24	EF	Eq. 18	M	0.07%	Y	N	
PAG_ROAD	ROAD	Stockpile - PAG Road	N/A	N/A	N/A	N/A	N/A	N/A	N/A	Molybdenum	7439-98-7	5.82E-08	24	EF	Eq. 18	M	0.07%	N	N	
PAG_ROAD	ROAD	Stockpile - PAG Road	N/A	N/A	N/A	N/A	N/A	N/A	N/A	Sodium	7440-23-5	1.55E-05	N/A	EF	Eq. 18	M	0.07%	Y	N	
PAG_ROAD	ROAD	Stockpile - PAG Road	N/A	N/A	N/A	N/A	N/A	N/A	N/A	Niobium	7440-03-1	1.21E-08	24	EF	Eq. 18	M	0.07%	N	N	
PAG_ROAD	ROAD	Stockpile - PAG Road	N/A	N/A	N/A	N/A	N/A	N/A	N/A	Nickel and Nickel Compounds	7440-02-0	5.57E-07	8760	EF	Eq. 18	M	0.07%	Y	N	
PAG_ROAD	ROAD	Stockpile - PAG Road	N/A	N/A	N/A	N/A	N/A	N/A	N/A	Phosphorus	7723-14-0	3.88E-06	24	EF	Eq. 18	M	0.07%	Y	N	
PAG_ROAD	ROAD	Stockpile - PAG Road	N/A	N/A	N/A	N/A	N/A	N/A	N/A	Lead and Lead Compounds	7439-92-1	1.05E-06	24	EF	Eq. 18	M	0.07%	Y	N	
PAG_ROAD	ROAD	Stockpile - PAG Road	N/A	N/A	N/A	N/A	N/A	N/A	N/A	Lead and Lead Compounds	7439-92-1	1.05E-06	720	EF	Eq. 18	M	0.07%	Y	N	
PAG_ROAD	ROAD	Stockpile - PAG Road	N/A	N/A	N/A	N/A	N/A	N/A	N/A	Rubidium	7440-17-7	1.08E-07	24	EF	Eq. 18	M	0.07%	N	N	
PAG_ROAD	ROAD	Stockpile - PAG Road	N/A	N/A	N/A	N/A	N/A	N/A	N/A	Rhenium	7440-15-5	2.42E-08	N/A	EF	Eq. 18	M	0.07%	Y	N	
PAG_ROAD	ROAD	Stockpile - PAG Road	N/A	N/A	N/A	N/A	N/A	N/A	N/A	Antimony	7440-36-0	5.33E-08	24	EF	Eq. 18	M	0.07%	N	N	
PAG_ROAD	ROAD	Stockpile - PAG Road	N/A	N/A	N/A	N/A	N/A	N/A	N/A	Scandium	7440-20-2	8.73E-08	N/A	EF	Eq. 18	M	0.07%	Y	N	
PAG_ROAD	ROAD	Stockpile - PAG Road	N/A	N/A	N/A	N/A	N/A	N/A	N/A	Selenium	7782-49-2	8.24E-08	24	EF	Eq. 18	M	0.07%	N	N	
PAG_ROAD	ROAD	Stockpile - PAG Road	N/A	N/A	N/A	N/A	N/A	N/A	N/A	Tin	7440-31-5	1.07E-07	24	EF	Eq. 18	M	0.07%	N	N	
PAG_ROAD	ROAD	Stockpile - PAG Road	N/A	N/A	N/A	N/A	N/A	N/A	N/A	Strontium	7440-24-6	1.18E-06	24	EF	Eq. 18	M	0.07%	N	N	
PAG_ROAD	ROAD	Stockpile - PAG Road	N/A	N/A	N/A	N/A	N/A	N/A	N/A	Tantalum	7440-25-7	4.85E-10	24	EF	Eq. 18	M	0.07%	N	N	
PAG_ROAD	ROAD	Stockpile - PAG Road	N/A	N/A	N/A	N/A	N/A	N/A	N/A	Terbium	7440-27-9	1.94E-09	N/A	EF	Eq. 18	M	0.07%	N	N	
PAG_ROAD	ROAD	Stockpile - PAG Road	N/A	N/A	N/A	N/A	N/A	N/A	N/A	Tellurium (except hydrogen telluride)	13494-80-9	1.36E-07	24	EF	Eq. 18	M	0.07%	N	N	
PAG_ROAD	ROAD	Stockpile - PAG Road	N/A	N/A	N/A	N/A	N/A	N/A	N/A	Thorium	7440-29-1	9.69E-08	N/A	EF	Eq. 18	M	0.07%	Y	N	
PAG_ROAD	ROAD	Stockpile - PAG Road	N/A	N/A	N/A	N/A	N/A	N/A	N/A	Titanium	7440-32-6	2.04E-05	24	EF	Eq. 18	M	0.07%	Y	N	
PAG_ROAD	ROAD	Stockpile - PAG Road	N/A	N/A	N/A	N/A	N/A	N/A	N/A	Thallium	7440-28-0	4.85E-08	24	EF	Eq. 18	M	0.07%	Y	N	
PAG_ROAD	ROAD	Stockpile - PAG Road	N/A	N/A	N/A	N/A	N/A	N/A	N/A	Uranium and Uranium Compounds - U in PM10	7440-61-1	9.69E-08	8760	EF	Eq. 18	M	0.07%	Y	N	
PAG_ROAD	ROAD	Stockpile - PAG Road	N/A	N/A	N/A	N/A	N/A	N/A	N/A	Vanadium	7440-62-2	7.75E-07	24	EF	Eq. 18	M	0.07%	Y	N	
PAG_ROAD	ROAD	Stockpile - PAG Road	N/A	N/A	N/A	N/A	N/A	N/A	N/A	Tungsten	7440-33-7	1.81E-07	24	EF	Eq. 18	M	0.07%	N	N	
PAG_ROAD	ROAD	Stockpile - PAG Road	N/A	N/A	N/A	N/A	N/A	N/A	N/A	Yttrium	7440-65-5	5.28E-08	24	EF	Eq. 18	M	0.07%	N	N	
PAG_ROAD	ROAD	Stockpile - PAG Road	N/A	N/A	N/A	N/A	N/A	N/A	N/A	Ytterbium	7440-64-4	5.33E-09	N/A	EF	Eq. 18	M	0.07%	N	N	
PAG_ROAD	ROAD	Stockpile - PAG Road	N/A	N/A	N/A	N/A	N/A	N/A	N/A	Zinc	7440-66-6	1.24E-05	24	EF	Eq. 18	M	0.07%	Y	N	
PAG_ROAD	ROAD	Stockpile - PAG Road	N/A	N/A	N/A	N/A	N/A	N/A	N/A	Zirconium	7440-67-7	1.24E-05	24	EF	Eq. 18	M	0.07%	Y	N	
CREEK FILL	CREEK FILL	Stockpile - NPAG Creek Fill (5 m avg.)	N/A	N/A	N/A	N/A	N/A	N/A	N/A	Suspended particulate matter	N/A-TSP	4.58E-02	24	EF	Eq. 18	M	0.19%	Y	N	
CREEK FILL	CREEK FILL	Stockpile - NPAG Creek Fill (5 m avg.)	N/A	N/A	N/A	N/A	N/A	N/A	N/A	Silver	7440-22-4	2.57E-07	24	EF	Eq. 18	M	0.48%	N	N	
CREEK FILL	CREEK FILL	Stockpile - NPAG Creek Fill (5 m avg.)	N/A	N/A	N/A	N/A	N/A	N/A	N/A	Aluminum	7429-90-5	2.17E-03	24	EF	Eq. 18	M	0.48%	Y	N	
CREEK FILL	CREEK FILL	Stockpile - NPAG Creek Fill (5 m avg.)	N/A	N/A	N/A	N/A	N/A	N/A	N/A	Arsenic and compounds	7440-38-2	4.34E-06	24	EF	Eq. 18	M	0.48%	Y	N	
CREEK FILL	CREEK FILL	Stockpile - NPAG Creek Fill (5 m avg.)	N/A	N/A	N/A	N/A	N/A	N/A	N/A	Gold	7440-57-5	4.70E-08	24	EF	Eq. 18	M	0.48%	N	N	
CREEK FILL	CREEK FILL	Stockpile - NPAG Creek Fill (5 m avg.)	N/A	N/A	N/A	N/A	N/A	N/A	N/A	Boron	7440-42-8	1.72E-06	24	EF	Eq. 18	M	0.48%	N	N	
CREEK FILL	CREEK FILL	Stockpile - NPAG Creek Fill (5 m avg.)	N/A	N/A	N/A	N/A	N/A	N/A	N/A	Barium - total water soluble	7440-39-3	1.00E-05	24	EF	Eq. 18	M	0.48%	Y	N	
CREEK FILL	CREEK FILL	Stockpile - NPAG Creek Fill (5 m avg.)	N/A	N/A	N/A	N/A	N/A	N/A	N/A	Beryllium and Beryllium Compounds	7440-41-7	6.27E-08	24	EF	Eq. 18	M	0.48%	Y	N	
CREEK FILL	CREEK FILL	Stockpile - NPAG Creek Fill (5 m avg.)	N/A	N/A	N/A	N/A	N/A	N/A	N/A	Bismuth	7440-69-9	7.84E-07	24	EF	Eq. 18	M	0.48%	N	N	
CREEK FILL	CREEK FILL	Stockpile - NPAG Creek Fill (5 m avg.)	N/A	N/A	N/A	N/A	N/A	N/A	N/A	Calcium carbonate	471-34-1	1.62E-03	24	EF	Eq. 18	M	0.48%	Y	N	
CREEK FILL	CREEK FILL	Stockpile - NPAG Creek Fill (5 m avg.)	N/A	N/A	N/A	N/A	N/A	N/A	N/A	Cadmium and Cadmium Compounds	7440-43-9	5.64E-07	24	EF	Eq. 18	M	0.48%	Y	N	
CREEK FILL	CREEK FILL	Stockpile - NPAG Creek Fill (5 m avg.)	N/A	N/A	N/A	N/A	N/A	N/A	N/A	Cerium	7440-45-1	2.45E-06	24	EF	Eq. 18	M	0.48%	N	N	
CREEK FILL	CREEK FILL	Stockpile - NPAG Creek Fill (5 m avg.)	N/A	N/A	N/A	N/A	N/A	N/A	N/A	Cobalt	7440-48-4	1.38E-06	24	EF	Eq. 18	M	0.48%	Y	N	
CREEK FILL	CREEK FILL	Stockpile - NPAG Creek Fill (5 m avg.)	N/A	N/A	N/A	N/A	N/A	N/A	N/A	Chromium Compounds (metallic, divalent and trivalent forms)	7440-47-3	1.14E-05	24	EF	Eq. 18	M	0.48%	Y	N	
CREEK FILL	CREEK FILL	Stockpile - NPAG Creek Fill (5 m avg.)	N/A	N/A	N/A	N/A	N/A	N/A	N/A	Cesium	7440-46-2	2.29E-07	N/A	EF	Eq. 18	M	0.48%	Y	N	
CREEK FILL	CREEK FILL	Stockpile - NPAG Creek Fill (5 m avg.)	N/A	N/A	N/A	N/A	N/A	N/A	N/A	Copper	7440-50-8	1.03E-05	24	EF	Eq. 18	M	0.48%	N	N	
CREEK FILL	CREEK FILL	Stockpile - NPAG Creek Fill (5 m avg.)	N/A	N/A	N/A	N/A	N/A	N/A	N/A	Iron (metallic)	7439-89-6	2.61E-03	24	EF	Eq. 18	M	0.48%	Y	N	
CREEK FILL	CREEK FILL	Stockpile - NPAG Creek Fill (5 m avg.)	N/A	N/A	N/A	N/A	N/A	N/A	N/A	Gallium	7440-55-3	3.13E-07	N/A	EF	Eq. 18	M	0.48%	Y	N	
CREEK FILL	CREEK FILL	Stockpile - NPAG Creek Fill (5 m avg.)	N/A	N/A	N/A	N/A	N/A	N/A	N/A	Germanium	7440-56-4	6.27E-09	N/A	EF	Eq. 18	M	0.48%	N	N	
CREEK FILL	CREEK FILL	Stockpile - NPAG Creek Fill (5 m avg.)	N/A	N/A	N/A	N/A	N/A	N/A	N/A	Hafnium	7440-58-6	1.57E-08	24	EF	Eq. 18	M	0.48%	N	N	
CREEK FILL	CREEK FILL	Stockpile - NPAG Creek Fill (5 m avg.)	N/A	N/A	N/A	N/A	N/A	N/A	N/A	Mercury (Hg)	7439-97-6	1.25E-07	24	EF	Eq. 18	M	0.48%	N	N	
CREEK FILL	CREEK FILL	Stockpile - NPAG Creek Fill (5 m avg.)	N/A	N/A	N/A	N/A	N/A	N/A	N/A	Indium	7440-74-6	1.25E-08	24	EF	Eq. 18	M	0.48%	N	N	
CREEK FILL	CREEK FILL	Stockpile - NPAG Creek Fill (5 m avg.)	N/A	N/A	N/A	N/A	N/A	N/A	N/A	Potassium	7440-09-7	6.05E-04	24	EF	Eq. 18	M	0.48%	Y	N	
CREEK FILL	CREEK FILL	Stockpile - NPAG Creek Fill (5 m avg.)	N/A	N/A	N/A	N/A	N/A	N/A	N/A	Lanthanum	7439-91-0	1.44E-06	N/A	EF	Eq. 18	M	0.48%	Y	N	
CREEK FILL	CREEK FILL	Stockpile - NPAG Creek Fill (5 m avg.)	N/A	N/A	N/A	N/A	N/A	N/A	N/A	Lithium (other than hydrides)	7439-93-2	2.47E-06	24	EF	Eq. 18	M	0.48%	N	N	
CREEK FILL	CREEK FILL	Stockpile - NPAG Creek Fill (5 m avg.)	N/A	N/A	N/A	N/A	N/A	N/A	N/A	Lutetium	7439-94-3	6.27E-09	N/A	EF	Eq. 18	M	0.48%	N	N	
CREEK FILL	CREEK FILL	Stockpile - NPAG Creek Fill (5 m avg.)	N/A	N/A	N/A	N/A	N/A	N/A	N/A	Magnesium	7439-95-4	8.90E-04	24	EF	Eq. 18	M	0.48%	Y	N	
CREEK FILL	CREEK FILL	Stockpile - NPAG Creek Fill (5 m avg.)	N/A	N/A	N/A	N/A	N/A	N/A	N/A	Manganese and Manganese Compounds	7439-96-5	5.05E-05	24	EF	Eq. 18	M	0.47%	Y	N	
CREEK FILL	CREEK FILL	Stockpile - NPAG Creek Fill (5 m avg.)	N/A	N/A	N/A	N/A	N/A	N/A	N/A	Molybdenum	7439-98-7	3.76E-07	24	EF	Eq. 18	M	0.48%	N	N	
CREEK FILL	CREEK FILL	Stockpile - NPAG Creek Fill (5 m avg.)	N/A	N/A	N/A	N/A	N/A	N/A	N/A	Sodium	7440-23-5	1.00E-04	N/A	EF	Eq. 18	M	0.48%	Y	N	
CREEK FILL	CREEK FILL	Stockpile - NPAG Creek Fill (5 m avg.)	N/A	N/A	N/A	N/A	N/A	N/A	N/A	Niobium	7440-03-1	7.84E-08	24	EF	Eq. 18	M	0.48%	N	N	
CREEK FILL	CREEK FILL	Stockpile - NPAG Creek Fill (5 m avg.)	N/A	N/A	N/A	N/A	N/A	N/A	N/A	Nickel and Nickel Compounds	7440-02-0	3.60E-06	8760	EF	Eq. 18	M	0.48%	Y	N	
CREEK FILL	CREEK FILL	Stockpile - NPAG Creek Fill (5 m avg.)	N/A	N/A	N/A	N/A	N/A	N/A	N/A	Phosphorus	7723-14-0	2.51E-05	24	EF	Eq. 18	M	0.48%	Y	N	
CREEK FILL	CREEK FILL	Stockpile - NPAG Creek Fill (5 m avg.)	N/A	N/A	N/A	N/A	N/A	N/A	N/A	Lead and Lead Compounds	7439-92-1	6.82E-06	24	EF	Eq. 18	M	0.48%	Y	N	
CREEK FILL	CREEK FILL	Stockpile - NPAG Creek Fill (5 m avg.)	N/A	N/A	N/A	N/A	N/A	N/A	N/A	Lead and Lead Compounds	7439-92-1	6.82E-06	720	EF	Eq. 18	M	0.48%	Y	N	
CREEK FILL	CREEK FILL	Stockpile - NPAG Creek Fill (5 m avg.)	N/A	N/A	N/A	N/A	N/A	N/A	N/A	Rubidium	7440-17-7	6.96E-07	24	EF	Eq. 18	M	0.48%	N	N	
CREEK FILL	CREEK FILL	Stockpile - NPAG Creek Fill (5 m avg.)	N/A	N/A	N/A	N/A	N/A	N/A	N/A	Rhenium	7440-15-5	1.57E-07	N/A	EF	Eq. 18	M	0.48%	Y	N	
CREEK FILL	CREEK FILL	Stockpile - NPAG Creek Fill (5 m avg.)	N/A	N/A	N/A	N/A	N/A	N/A	N/A	Antimony	7440-36-0	3.45E-07	24	EF	Eq. 18	M	0.48%	N	N	
CREEK FILL	CREEK FILL	Stockpile - NPAG Creek Fill (5 m avg.)	N/A	N/A	N/A	N/A	N/A	N/A	N/A	Scandium	7440-20-2	5.64E-07	N/A	EF	Eq. 18	M	0.48%	Y	N	
CREEK FILL	CREEK FILL	Stockpile - NPAG Creek Fill (5 m avg.)	N/A	N/A	N/A	N/A	N/A	N/A	N/A	Selenium	7782-49-2	5.33E-07	24	EF	Eq. 18	M	0.48%	N	N	
CREEK FILL	CREEK FILL	Stockpile - NPAG Creek Fill (5 m avg.)	N/A	N/A	N/A	N/A	N/A	N/A	N/A	Tin	7440-31-5	6.90E-07	24	EF	Eq. 18	M	0.48%	N	N	
CREEK FILL	CREEK FILL	Stockpile - NPAG Creek Fill (5 m avg.)	N/A	N/A	N/A	N/A	N/A	N/A	N/A	Strontium	7440-24-6	7.62E-06	24	EF	Eq. 18	M	0.48%	N	N	
CREEK FILL	CREEK FILL	Stockpile - NPAG Creek Fill (5 m avg.)	N/A	N/A	N/A	N/A	N/A	N/A	N/A	Tantalum	7440-25-7	3.13E-09	24	EF	Eq. 18	M	0.48%	N	N	
CREEK FILL	CREEK FILL	Stockpile - NPAG Creek Fill (5 m avg.)	N/A	N/A	N/A	N/A	N/A	N/A	N/A	Terbium	7440-27-9	1.25E-08	N/A	EF	Eq. 18	M	0.48%	N	N	

CREEK FILL	CREEK FILL	Stockpile - NPAG Creek Fill (5 m avg.)	N/A	N/A	N/A	N/A	N/A	N/A	N/A	Tellurium (except hydrogen telluride)	13494-80-9	8.78E-07	24	EF	Eq. 18	M	0.48%	N	N	
CREEK FILL	CREEK FILL	Stockpile - NPAG Creek Fill (5 m avg.)	N/A	N/A	N/A	N/A	N/A	N/A	N/A	Thorium	7440-29-1	6.27E-07	N/A	EF	Eq. 18	M	0.48%	Y	N	
CREEK FILL	CREEK FILL	Stockpile - NPAG Creek Fill (5 m avg.)	N/A	N/A	N/A	N/A	N/A	N/A	N/A	Titanium	7440-32-6	1.32E-04	24	EF	Eq. 18	M	0.48%	Y	N	
CREEK FILL	CREEK FILL	Stockpile - NPAG Creek Fill (5 m avg.)	N/A	N/A	N/A	N/A	N/A	N/A	N/A	Thallium	7440-28-0	3.13E-07	24	EF	Eq. 18	M	0.48%	Y	N	
CREEK FILL	CREEK FILL	Stockpile - NPAG Creek Fill (5 m avg.)	N/A	N/A	N/A	N/A	N/A	N/A	N/A	Uranium and Uranium Compounds - U in PM10	7440-61-1	6.27E-07	8760	EF	Eq. 18	M	0.48%	Y	N	
CREEK FILL	CREEK FILL	Stockpile - NPAG Creek Fill (5 m avg.)	N/A	N/A	N/A	N/A	N/A	N/A	N/A	Vanadium	7440-62-2	5.01E-06	24	EF	Eq. 18	M	0.48%	Y	N	
CREEK FILL	CREEK FILL	Stockpile - NPAG Creek Fill (5 m avg.)	N/A	N/A	N/A	N/A	N/A	N/A	N/A	Tungsten	7440-33-7	1.17E-06	24	EF	Eq. 18	M	0.48%	N	N	
CREEK FILL	CREEK FILL	Stockpile - NPAG Creek Fill (5 m avg.)	N/A	N/A	N/A	N/A	N/A	N/A	N/A	Yttrium	7440-65-5	3.42E-07	24	EF	Eq. 18	M	0.48%	N	N	
CREEK FILL	CREEK FILL	Stockpile - NPAG Creek Fill (5 m avg.)	N/A	N/A	N/A	N/A	N/A	N/A	N/A	Ytterbium	7440-64-4	3.45E-08	N/A	EF	Eq. 18	M	0.48%	N	N	
CREEK FILL	CREEK FILL	Stockpile - NPAG Creek Fill (5 m avg.)	N/A	N/A	N/A	N/A	N/A	N/A	N/A	Zinc	7440-66-6	7.99E-05	24	EF	Eq. 18	M	0.48%	Y	N	
CREEK FILL	CREEK FILL	Stockpile - NPAG Creek Fill (5 m avg.)	N/A	N/A	N/A	N/A	N/A	N/A	N/A	Zirconium	7440-67-7	7.99E-05	24	EF	Eq. 18	M	0.48%	Y	N	
TMA	TMA	Stockpile - Tailings	N/A	N/A	N/A	1.6	N/A	420565.06	5412899.9	Suspended particulate matter	N/A-TSP	6.94E-01	24	EF	Eq. 18	M	2.87%	Y	N	
TMA	TMA	Stockpile - Tailings	N/A	N/A	N/A	1.6	N/A	420565.06	5412899.9	Silver	7440-22-4	3.90E-06	24	EF	Eq. 18	M	7.28%	N	N	
TMA	TMA	Stockpile - Tailings	N/A	N/A	N/A	1.6	N/A	420565.06	5412899.9	Aluminum	7429-90-5	3.29E-02	24	EF	Eq. 18	M	7.28%	Y	Y	
TMA	TMA	Stockpile - Tailings	N/A	N/A	N/A	1.6	N/A	420565.06	5412899.9	Arsenic and compounds	7440-38-2	6.58E-05	24	EF	Eq. 18	M	7.28%	Y	Y	
TMA	TMA	Stockpile - Tailings	N/A	N/A	N/A	1.6	N/A	420565.06	5412899.9	Gold	7440-57-5	7.13E-07	24	EF	Eq. 18	M	7.28%	N	N	
TMA	TMA	Stockpile - Tailings	N/A	N/A	N/A	1.6	N/A	420565.06	5412899.9	Boron	7440-42-8	2.61E-05	24	EF	Eq. 18	M	7.28%	N	N	
TMA	TMA	Stockpile - Tailings	N/A	N/A	N/A	1.6	N/A	420565.06	5412899.9	Barium - total water soluble	7440-39-3	1.52E-04	24	EF	Eq. 18	M	7.28%	Y	Y	
TMA	TMA	Stockpile - Tailings	N/A	N/A	N/A	1.6	N/A	420565.06	5412899.9	Beryllium and Beryllium Compounds	7440-41-7	9.50E-07	24	EF	Eq. 18	M	7.28%	Y	Y	
TMA	TMA	Stockpile - Tailings	N/A	N/A	N/A	1.6	N/A	420565.06	5412899.9	Bismuth	7440-69-9	1.19E-05	24	EF	Eq. 18	M	7.28%	N	N	
TMA	TMA	Stockpile - Tailings	N/A	N/A	N/A	1.6	N/A	420565.06	5412899.9	Calcium carbonate	471-34-1	2.46E-02	24	EF	Eq. 18	M	7.28%	Y	Y	
TMA	TMA	Stockpile - Tailings	N/A	N/A	N/A	1.6	N/A	420565.06	5412899.9	Cadmium and Cadmium Compounds	7440-43-9	8.55E-06	24	EF	Eq. 18	M	7.28%	Y	Y	
TMA	TMA	Stockpile - Tailings	N/A	N/A	N/A	1.6	N/A	420565.06	5412899.9	Cerium	7440-45-1	3.71E-05	24	EF	Eq. 18	M	7.28%	N	N	
TMA	TMA	Stockpile - Tailings	N/A	N/A	N/A	1.6	N/A	420565.06	5412899.9	Cobalt	7440-48-4	2.09E-05	24	EF	Eq. 18	M	7.27%	Y	Y	
TMA	TMA	Stockpile - Tailings	N/A	N/A	N/A	1.6	N/A	420565.06	5412899.9	Chromium Compounds (metallic, divalent and trivalent forms)	7440-47-3	1.73E-04	24	EF	Eq. 18	M	7.27%	Y	Y	
TMA	TMA	Stockpile - Tailings	N/A	N/A	N/A	1.6	N/A	420565.06	5412899.9	Cesium	7440-46-2	3.47E-06	N/A	EF	Eq. 18	M	7.28%	Y	Y	
TMA	TMA	Stockpile - Tailings	N/A	N/A	N/A	1.6	N/A	420565.06	5412899.9	Copper	7440-50-8	1.57E-04	24	EF	Eq. 18	M	7.28%	N	N	
TMA	TMA	Stockpile - Tailings	N/A	N/A	N/A	1.6	N/A	420565.06	5412899.9	Iron (metallic)	7439-89-6	3.96E-02	24	EF	Eq. 18	M	7.28%	Y	Y	
TMA	TMA	Stockpile - Tailings	N/A	N/A	N/A	1.6	N/A	420565.06	5412899.9	Gallium	7440-55-3	4.75E-06	N/A	EF	Eq. 18	M	7.28%	Y	Y	
TMA	TMA	Stockpile - Tailings	N/A	N/A	N/A	1.6	N/A	420565.06	5412899.9	Germanium	7440-56-4	9.50E-08	N/A	EF	Eq. 18	M	7.28%	N	N	
TMA	TMA	Stockpile - Tailings	N/A	N/A	N/A	1.6	N/A	420565.06	5412899.9	Hafnium	7440-58-6	2.38E-07	24	EF	Eq. 18	M	7.28%	N	N	
TMA	TMA	Stockpile - Tailings	N/A	N/A	N/A	1.6	N/A	420565.06	5412899.9	Mercury (Hg)	7439-97-6	1.90E-06	24	EF	Eq. 18	M	7.28%	N	N	
TMA	TMA	Stockpile - Tailings	N/A	N/A	N/A	1.6	N/A	420565.06	5412899.9	Indium	7440-74-6	1.90E-07	24	EF	Eq. 18	M	7.28%	N	N	
TMA	TMA	Stockpile - Tailings	N/A	N/A	N/A	1.6	N/A	420565.06	5412899.9	Potassium	7440-09-7	9.17E-03	24	EF	Eq. 18	M	7.28%	Y	Y	
TMA	TMA	Stockpile - Tailings	N/A	N/A	N/A	1.6	N/A	420565.06	5412899.9	Lanthanum	7439-91-0	2.19E-05	N/A	EF	Eq. 18	M	7.28%	Y	Y	
TMA	TMA	Stockpile - Tailings	N/A	N/A	N/A	1.6	N/A	420565.06	5412899.9	Lithium (other than hydrides)	7439-93-2	3.75E-05	24	EF	Eq. 18	M	7.28%	N	N	
TMA	TMA	Stockpile - Tailings	N/A	N/A	N/A	1.6	N/A	420565.06	5412899.9	Lutetium	7439-94-3	9.50E-08	N/A	EF	Eq. 18	M	7.28%	N	N	
TMA	TMA	Stockpile - Tailings	N/A	N/A	N/A	1.6	N/A	420565.06	5412899.9	Magnesium	7439-95-4	1.35E-02	24	EF	Eq. 18	M	7.28%	Y	Y	
TMA	TMA	Stockpile - Tailings	N/A	N/A	N/A	1.6	N/A	420565.06	5412899.9	Manganese and Manganese Compounds	7439-96-5	7.65E-04	24	EF	Eq. 18	M	7.07%	Y	Y	
TMA	TMA	Stockpile - Tailings	N/A	N/A	N/A	1.6	N/A	420565.06	5412899.9	Molybdenum	7439-98-7	5.70E-06	24	EF	Eq. 18	M	7.28%	N	N	
TMA	TMA	Stockpile - Tailings	N/A	N/A	N/A	1.6	N/A	420565.06	5412899.9	Sodium	7440-23-5	1.52E-03	N/A	EF	Eq. 18	M	7.28%	Y	Y	
TMA	TMA	Stockpile - Tailings	N/A	N/A	N/A	1.6	N/A	420565.06	5412899.9	Niobium	7440-03-1	1.19E-06	24	EF	Eq. 18	M	7.28%	N	N	
TMA	TMA	Stockpile - Tailings	N/A	N/A	N/A	1.6	N/A	420565.06	5412899.9	Nickel and Nickel Compounds	7440-02-0	5.46E-05	8760	EF	Eq. 18	M	7.26%	Y	Y	
TMA	TMA	Stockpile - Tailings	N/A	N/A	N/A	1.6	N/A	420565.06	5412899.9	Phosphorus	7723-14-0	3.80E-04	24	EF	Eq. 18	M	7.28%	Y	Y	
TMA	TMA	Stockpile - Tailings	N/A	N/A	N/A	1.6	N/A	420565.06	5412899.9	Lead and Lead Compounds	7439-92-1	1.03E-04	24	EF	Eq. 18	M	7.28%	Y	Y	
TMA	TMA	Stockpile - Tailings	N/A	N/A	N/A	1.6	N/A	420565.06	5412899.9	Lead and Lead Compounds	7439-92-1	1.03E-04	720	EF	Eq. 18	M	7.28%	Y	Y	
TMA	TMA	Stockpile - Tailings	N/A	N/A	N/A	1.6	N/A	420565.06	5412899.9	Rubidium	7440-17-7	1.05E-05	24	EF	Eq. 18	M	7.28%	N	N	
TMA	TMA	Stockpile - Tailings	N/A	N/A	N/A	1.6	N/A	420565.06	5412899.9	Rhenium	7440-15-5	2.38E-06	N/A	EF	Eq. 18	M	7.28%	Y	Y	
TMA	TMA	Stockpile - Tailings	N/A	N/A	N/A	1.6	N/A	420565.06	5412899.9	Antimony	7440-36-0	5.23E-06	24	EF	Eq. 18	M	7.28%	N	N	
TMA	TMA	Stockpile - Tailings	N/A	N/A	N/A	1.6	N/A	420565.06	5412899.9	Scandium	7440-20-2	8.55E-06	N/A	EF	Eq. 18	M	7.28%	Y	Y	
TMA	TMA	Stockpile - Tailings	N/A	N/A	N/A	1.6	N/A	420565.06	5412899.9	Selenium	7782-49-2	8.08E-06	24	EF	Eq. 18	M	7.28%	N	N	
TMA	TMA	Stockpile - Tailings	N/A	N/A	N/A	1.6	N/A	420565.06	5412899.9	Tin	7440-31-5	1.05E-05	24	EF	Eq. 18	M	7.28%	N	N	
TMA	TMA	Stockpile - Tailings	N/A	N/A	N/A	1.6	N/A	420565.06	5412899.9	Strontium	7440-24-6	1.15E-04	24	EF	Eq. 18	M	7.28%	N	N	
TMA	TMA	Stockpile - Tailings	N/A	N/A	N/A	1.6	N/A	420565.06	5412899.9	Tantalum	7440-25-7	4.75E-08	24	EF	Eq. 18	M	7.28%	N	N	
TMA	TMA	Stockpile - Tailings	N/A	N/A	N/A	1.6	N/A	420565.06	5412899.9	Terbium	7440-27-9	1.90E-07	N/A	EF	Eq. 18	M	7.28%	N	N	
TMA	TMA	Stockpile - Tailings	N/A	N/A	N/A	1.6	N/A	420565.06	5412899.9	Tellurium (except hydrogen telluride)	13494-80-9	1.33E-05	24	EF	Eq. 18	M	7.28%	N	N	
TMA	TMA	Stockpile - Tailings	N/A	N/A	N/A	1.6	N/A	420565.06	5412899.9	Thorium	7440-29-1	9.50E-06	N/A	EF	Eq. 18	M	7.28%	Y	Y	
TMA	TMA	Stockpile - Tailings	N/A	N/A	N/A	1.6	N/A	420565.06	5412899.9	Titanium	7440-32-6	2.00E-03	24	EF	Eq. 18	M	7.28%	Y	Y	
TMA	TMA	Stockpile - Tailings	N/A	N/A	N/A	1.6	N/A	420565.06	5412899.9	Thallium	7440-28-0	4.75E-06	24	EF	Eq. 18	M	7.28%	Y	Y	
TMA	TMA	Stockpile - Tailings	N/A	N/A	N/A	1.6	N/A	420565.06	5412899.9	Uranium and Uranium Compounds - U in PM10	7440-61-1	9.50E-06	8760	EF	Eq. 18	M	7.28%	Y	Y	
TMA	TMA	Stockpile - Tailings	N/A	N/A	N/A	1.6	N/A	420565.06	5412899.9	Vanadium	7440-62-2	7.60E-05	24	EF	Eq. 18	M	7.28%	Y	Y	
TMA	TMA	Stockpile - Tailings	N/A	N/A	N/A	1.6	N/A	420565.06	5412899.9	Tungsten	7440-33-7	1.78E-05	24	EF	Eq. 18	M	7.28%	N	N	
TMA	TMA	Stockpile - Tailings	N/A	N/A	N/A	1.6	N/A	420565.06	5412899.9	Yttrium	7440-65-5	5.18E-06	24	EF	Eq. 18	M	7.28%	N	N	
TMA	TMA	Stockpile - Tailings	N/A	N/A	N/A	1.6	N/A	420565.06	5412899.9	Ytterbium	7440-64-4	5.23E-07	N/A	EF	Eq. 18	M	7.28%	N	N	
TMA	TMA	Stockpile - Tailings	N/A	N/A	N/A	1.6	N/A	420565.06	5412899.9	Zinc	7440-66-6	1.21E-03	24	EF	Eq. 18	M	7.28%	Y	Y	
TMA	TMA	Stockpile - Tailings	N/A	N/A	N/A	1.6	N/A	420565.06	5412899.9	Zirconium	7440-67-7	1.21E-03	24	EF	Eq. 18	M	7.28%	Y	Y	
PIT	PIT	Stockpile - Mix of OVB & NPAG	N/A	N/A	N/A	2	N/A	425279.15	5410021.38	Suspended particulate matter	N/A-TSP	2.34E+00	24	EF	Eq. 18	M	9.68%	Y	Y	
PIT	PIT	Stockpile - Mix of OVB & NPAG	N/A	N/A	N/A	2	N/A	425279.15	5410021.38	Silver	7440-22-4	1.31E-05	24	EF	Eq. 18	M	24.52%	N	N	
PIT	PIT	Stockpile - Mix of OVB & NPAG	N/A	N/A	N/A	2	N/A	425279.15	5410021.38	Aluminum	7429-90-5	1.11E-01	24	EF	Eq. 18	M	24.52%	Y	Y	
PIT	PIT	Stockpile - Mix of OVB & NPAG	N/A	N/A	N/A	2	N/A	425279.15	5410021.38	Arsenic and compounds	7440-38-2	2.22E-04	24	EF	Eq. 18	M	24.52%	Y	Y	
PIT	PIT	Stockpile - Mix of OVB & NPAG	N/A	N/A	N/A	2	N/A	425279.15	5410021.38	Gold	7440-57-5	2.40E-06	24	EF	Eq. 18	M	24.52%	N	N	
PIT	PIT	Stockpile - Mix of OVB & NPAG	N/A	N/A	N/A	2	N/A	425279.15	5410021.38	Boron	7440-42-8	8.80E-05	24	EF	Eq. 18	M	24.52%	N	N	
PIT	PIT	Stockpile - Mix of OVB & NPAG	N/A	N/A	N/A	2	N/A	425279.15	5410021.38	Barium - total water soluble	7440-39-3	5.12E-04	24	EF	Eq. 18	M	24.52%	Y	Y	
PIT	PIT	Stockpile - Mix of OVB & NPAG	N/A	N/A	N/A	2	N/A	425279.15	5410021.38	Beryllium and Beryllium Compounds	7440-41-7	3.20E-06	24	EF	Eq. 18	M	24.52%	Y	Y	
PIT	PIT	Stockpile - Mix of OVB & NPAG	N/A	N/A	N/A	2	N/A	425279.15	5410021.38	Bismuth	7440-69-9	4.00E-05	24	EF	Eq. 18	M	24.52%	N	N	
PIT	PIT	Stockpile - Mix of OVB & NPAG	N/A	N/A	N/A	2	N/A	425279.15	5410021.38	Calcium carbonate	471-34-1	8.28E-02	24	EF	Eq. 18	M	24.52%	Y	Y	
PIT	PIT	Stockpile - Mix of OVB & NPAG	N/A	N/A	N/A	2	N/A	425279.15	5410021.38	Cadmium and Cadmium Compounds	7440-43-9	2.88E-05	24	EF	Eq. 18	M	24.52%	Y	Y	
PIT	PIT	Stockpile - Mix of OVB & NPAG	N/A	N/A	N/A	2	N/A	425279.15	5410021.38	Cerium	7440-45-1	1.25E-04	24	EF	Eq. 18	M	24.52%	N	N	
PIT	PIT	Stockpile - Mix of OVB & NPAG	N/A	N/A	N/A	2	N/A	425279.15	5410021.38	Cobalt	7440-48-4	7.04E-05	24	EF	Eq. 18	M	24.48%	Y	Y	

PIT	PIT	Stockpile - Mix of OVB & NPAG	N/A	N/A	N/A	2	N/A	425279.15	5410021.38	Chromium Compounds (metallic, divalent and trivalent forms)	7440-47-3	5.84E-04	24	EF	Eq. 18	M	24.50%	Y	Y	
PIT	PIT	Stockpile - Mix of OVB & NPAG	N/A	N/A	N/A	2	N/A	425279.15	5410021.38	Cesium	7440-46-2	1.17E-05	N/A	EF	Eq. 18	M	24.52%	Y	Y	
PIT	PIT	Stockpile - Mix of OVB & NPAG	N/A	N/A	N/A	2	N/A	425279.15	5410021.38	Copper	7440-50-8	5.28E-04	24	EF	Eq. 18	M	24.52%	N	N	
PIT	PIT	Stockpile - Mix of OVB & NPAG	N/A	N/A	N/A	2	N/A	425279.15	5410021.38	Iron (metallic)	7439-89-6	1.33E-01	24	EF	Eq. 18	M	24.52%	Y	Y	
PIT	PIT	Stockpile - Mix of OVB & NPAG	N/A	N/A	N/A	2	N/A	425279.15	5410021.38	Gallium	7440-55-3	1.60E-05	N/A	EF	Eq. 18	M	24.52%	Y	Y	
PIT	PIT	Stockpile - Mix of OVB & NPAG	N/A	N/A	N/A	2	N/A	425279.15	5410021.38	Germanium	7440-56-4	3.20E-07	N/A	EF	Eq. 18	M	24.52%	N	N	
PIT	PIT	Stockpile - Mix of OVB & NPAG	N/A	N/A	N/A	2	N/A	425279.15	5410021.38	Hafnium	7440-58-6	8.00E-07	24	EF	Eq. 18	M	24.52%	N	N	
PIT	PIT	Stockpile - Mix of OVB & NPAG	N/A	N/A	N/A	2	N/A	425279.15	5410021.38	Mercury (Hg)	7439-97-6	6.40E-06	24	EF	Eq. 18	M	24.52%	N	N	
PIT	PIT	Stockpile - Mix of OVB & NPAG	N/A	N/A	N/A	2	N/A	425279.15	5410021.38	Indium	7440-74-6	6.40E-07	24	EF	Eq. 18	M	24.52%	N	N	
PIT	PIT	Stockpile - Mix of OVB & NPAG	N/A	N/A	N/A	2	N/A	425279.15	5410021.38	Potassium	7440-09-7	3.09E-02	24	EF	Eq. 18	M	24.52%	Y	Y	
PIT	PIT	Stockpile - Mix of OVB & NPAG	N/A	N/A	N/A	2	N/A	425279.15	5410021.38	Lanthanum	7439-91-0	7.38E-05	N/A	EF	Eq. 18	M	24.52%	Y	Y	
PIT	PIT	Stockpile - Mix of OVB & NPAG	N/A	N/A	N/A	2	N/A	425279.15	5410021.38	Lithium (other than hydrides)	7439-93-2	1.26E-04	24	EF	Eq. 18	M	24.52%	N	N	
PIT	PIT	Stockpile - Mix of OVB & NPAG	N/A	N/A	N/A	2	N/A	425279.15	5410021.38	Lutetium	7439-94-3	3.20E-07	N/A	EF	Eq. 18	M	24.52%	N	N	
PIT	PIT	Stockpile - Mix of OVB & NPAG	N/A	N/A	N/A	2	N/A	425279.15	5410021.38	Magnesium	7439-95-4	4.55E-02	24	EF	Eq. 18	M	24.52%	Y	Y	
PIT	PIT	Stockpile - Mix of OVB & NPAG	N/A	N/A	N/A	2	N/A	425279.15	5410021.38	Manganese and Manganese Compounds	7439-96-5	2.58E-03	24	EF	Eq. 18	M	23.81%	Y	Y	
PIT	PIT	Stockpile - Mix of OVB & NPAG	N/A	N/A	N/A	2	N/A	425279.15	5410021.38	Molybdenum	7439-98-7	1.92E-05	24	EF	Eq. 18	M	24.52%	N	N	
PIT	PIT	Stockpile - Mix of OVB & NPAG	N/A	N/A	N/A	2	N/A	425279.15	5410021.38	Sodium	7440-23-5	5.12E-03	N/A	EF	Eq. 18	M	24.52%	Y	Y	
PIT	PIT	Stockpile - Mix of OVB & NPAG	N/A	N/A	N/A	2	N/A	425279.15	5410021.38	Niobium	7440-03-1	4.00E-06	24	EF	Eq. 18	M	24.52%	N	N	
PIT	PIT	Stockpile - Mix of OVB & NPAG	N/A	N/A	N/A	2	N/A	425279.15	5410021.38	Nickel and Nickel Compounds	7440-02-0	1.84E-04	8760	EF	Eq. 18	M	24.47%	Y	Y	
PIT	PIT	Stockpile - Mix of OVB & NPAG	N/A	N/A	N/A	2	N/A	425279.15	5410021.38	Phosphorus	7723-14-0	1.28E-03	24	EF	Eq. 18	M	24.52%	Y	Y	
PIT	PIT	Stockpile - Mix of OVB & NPAG	N/A	N/A	N/A	2	N/A	425279.15	5410021.38	Lead and Lead Compounds	7439-92-1	3.48E-04	24	EF	Eq. 18	M	24.52%	Y	Y	
PIT	PIT	Stockpile - Mix of OVB & NPAG	N/A	N/A	N/A	2	N/A	425279.15	5410021.38	Lead and Lead Compounds	7439-92-1	3.48E-04	720	EF	Eq. 18	M	24.52%	Y	Y	
PIT	PIT	Stockpile - Mix of OVB & NPAG	N/A	N/A	N/A	2	N/A	425279.15	5410021.38	Rubidium	7440-17-7	3.55E-05	24	EF	Eq. 18	M	24.52%	N	N	
PIT	PIT	Stockpile - Mix of OVB & NPAG	N/A	N/A	N/A	2	N/A	425279.15	5410021.38	Rhenium	7440-15-5	8.00E-06	N/A	EF	Eq. 18	M	24.52%	Y	Y	
PIT	PIT	Stockpile - Mix of OVB & NPAG	N/A	N/A	N/A	2	N/A	425279.15	5410021.38	Antimony	7440-36-0	1.76E-05	24	EF	Eq. 18	M	24.52%	N	N	
PIT	PIT	Stockpile - Mix of OVB & NPAG	N/A	N/A	N/A	2	N/A	425279.15	5410021.38	Scandium	7440-20-2	2.88E-05	N/A	EF	Eq. 18	M	24.52%	Y	Y	
PIT	PIT	Stockpile - Mix of OVB & NPAG	N/A	N/A	N/A	2	N/A	425279.15	5410021.38	Selenium	7782-49-2	2.72E-05	24	EF	Eq. 18	M	24.52%	N	N	
PIT	PIT	Stockpile - Mix of OVB & NPAG	N/A	N/A	N/A	2	N/A	425279.15	5410021.38	Tin	7440-31-5	3.52E-05	24	EF	Eq. 18	M	24.52%	N	N	
PIT	PIT	Stockpile - Mix of OVB & NPAG	N/A	N/A	N/A	2	N/A	425279.15	5410021.38	Strontium	7440-24-6	3.89E-04	24	EF	Eq. 18	M	24.52%	N	N	
PIT	PIT	Stockpile - Mix of OVB & NPAG	N/A	N/A	N/A	2	N/A	425279.15	5410021.38	Tantalum	7440-25-7	1.60E-07	24	EF	Eq. 18	M	24.52%	N	N	
PIT	PIT	Stockpile - Mix of OVB & NPAG	N/A	N/A	N/A	2	N/A	425279.15	5410021.38	Terbium	7440-27-9	6.40E-07	N/A	EF	Eq. 18	M	24.52%	N	N	
PIT	PIT	Stockpile - Mix of OVB & NPAG	N/A	N/A	N/A	2	N/A	425279.15	5410021.38	Tellurium (except hydrogen telluride)	13494-80-9	4.48E-05	24	EF	Eq. 18	M	24.52%	N	N	
PIT	PIT	Stockpile - Mix of OVB & NPAG	N/A	N/A	N/A	2	N/A	425279.15	5410021.38	Thorium	7440-29-1	3.20E-05	N/A	EF	Eq. 18	M	24.52%	Y	Y	
PIT	PIT	Stockpile - Mix of OVB & NPAG	N/A	N/A	N/A	2	N/A	425279.15	5410021.38	Titanium	7440-32-6	6.72E-03	24	EF	Eq. 18	M	24.52%	Y	Y	
PIT	PIT	Stockpile - Mix of OVB & NPAG	N/A	N/A	N/A	2	N/A	425279.15	5410021.38	Thallium	7440-28-0	1.60E-05	24	EF	Eq. 18	M	24.52%	Y	Y	
PIT	PIT	Stockpile - Mix of OVB & NPAG	N/A	N/A	N/A	2	N/A	425279.15	5410021.38	Uranium and Uranium Compounds - U in PM10	7440-61-1	3.20E-05	8760	EF	Eq. 18	M	24.52%	Y	Y	
PIT	PIT	Stockpile - Mix of OVB & NPAG	N/A	N/A	N/A	2	N/A	425279.15	5410021.38	Vanadium	7440-62-2	2.56E-04	24	EF	Eq. 18	M	24.52%	Y	Y	
PIT	PIT	Stockpile - Mix of OVB & NPAG	N/A	N/A	N/A	2	N/A	425279.15	5410021.38	Tungsten	7440-33-7	5.99E-05	24	EF	Eq. 18	M	24.52%	N	N	
PIT	PIT	Stockpile - Mix of OVB & NPAG	N/A	N/A	N/A	2	N/A	425279.15	5410021.38	Yttrium	7440-65-5	1.74E-05	24	EF	Eq. 18	M	24.52%	N	N	
PIT	PIT	Stockpile - Mix of OVB & NPAG	N/A	N/A	N/A	2	N/A	425279.15	5410021.38	Ytterbium	7440-64-4	1.76E-06	N/A	EF	Eq. 18	M	24.52%	N	N	
PIT	PIT	Stockpile - Mix of OVB & NPAG	N/A	N/A	N/A	2	N/A	425279.15	5410021.38	Zinc	7440-66-6	4.08E-03	24	EF	Eq. 18	M	24.52%	Y	Y	
PIT	PIT	Stockpile - Mix of OVB & NPAG	N/A	N/A	N/A	2	N/A	425279.15	5410021.38	Zirconium	7440-67-7	4.08E-03	24	EF	Eq. 18	M	24.52%	Y	Y	
NPAG_ROAD	ROAD	Stockpile - NPAG (as shown, plus up to TMA corner)	N/A	N/A	N/A	N/A	N/A	N/A	N/A	Suspended particulate matter	N/A-TSP	4.61E-02	24	EF	Eq. 18	M	0.19%	Y	N	
NPAG_ROAD	ROAD	Stockpile - NPAG (as shown, plus up to TMA corner)	N/A	N/A	N/A	N/A	N/A	N/A	N/A	Silver	7440-22-4	2.59E-07	24	EF	Eq. 18	M	0.48%	N	N	
NPAG_ROAD	ROAD	Stockpile - NPAG (as shown, plus up to TMA corner)	N/A	N/A	N/A	N/A	N/A	N/A	N/A	Aluminum	7429-90-5	2.19E-03	24	EF	Eq. 18	M	0.48%	Y	N	
NPAG_ROAD	ROAD	Stockpile - NPAG (as shown, plus up to TMA corner)	N/A	N/A	N/A	N/A	N/A	N/A	N/A	Arsenic and compounds	7440-38-2	4.38E-06	24	EF	Eq. 18	M	0.48%	Y	N	
NPAG_ROAD	ROAD	Stockpile - NPAG (as shown, plus up to TMA corner)	N/A	N/A	N/A	N/A	N/A	N/A	N/A	Gold	7440-57-5	4.74E-08	24	EF	Eq. 18	M	0.48%	N	N	
NPAG_ROAD	ROAD	Stockpile - NPAG (as shown, plus up to TMA corner)	N/A	N/A	N/A	N/A	N/A	N/A	N/A	Boron	7440-42-8	1.74E-06	24	EF	Eq. 18	M	0.48%	N	N	
NPAG_ROAD	ROAD	Stockpile - NPAG (as shown, plus up to TMA corner)	N/A	N/A	N/A	N/A	N/A	N/A	N/A	Barium - total water soluble	7440-39-3	1.01E-05	24	EF	Eq. 18	M	0.48%	Y	N	
NPAG_ROAD	ROAD	Stockpile - NPAG (as shown, plus up to TMA corner)	N/A	N/A	N/A	N/A	N/A	N/A	N/A	Beryllium and Beryllium Compounds	7440-41-7	6.31E-08	24	EF	Eq. 18	M	0.48%	Y	N	
NPAG_ROAD	ROAD	Stockpile - NPAG (as shown, plus up to TMA corner)	N/A	N/A	N/A	N/A	N/A	N/A	N/A	Bismuth	7440-69-9	7.89E-07	24	EF	Eq. 18	M	0.48%	N	N	
NPAG_ROAD	ROAD	Stockpile - NPAG (as shown, plus up to TMA corner)	N/A	N/A	N/A	N/A	N/A	N/A	N/A	Calcium carbonate	471-34-1	1.63E-03	24	EF	Eq. 18	M	0.48%	Y	N	
NPAG_ROAD	ROAD	Stockpile - NPAG (as shown, plus up to TMA corner)	N/A	N/A	N/A	N/A	N/A	N/A	N/A	Cadmium and Cadmium Compounds	7440-43-9	5.68E-07	24	EF	Eq. 18	M	0.48%	Y	N	
NPAG_ROAD	ROAD	Stockpile - NPAG (as shown, plus up to TMA corner)	N/A	N/A	N/A	N/A	N/A	N/A	N/A	Cerium	7440-45-1	2.47E-06	24	EF	Eq. 18	M	0.48%	N	N	
NPAG_ROAD	ROAD	Stockpile - NPAG (as shown, plus up to TMA corner)	N/A	N/A	N/A	N/A	N/A	N/A	N/A	Cobalt	7440-48-4	1.39E-06	24	EF	Eq. 18	M	0.48%	Y	N	
NPAG_ROAD	ROAD	Stockpile - NPAG (as shown, plus up to TMA corner)	N/A	N/A	N/A	N/A	N/A	N/A	N/A	Chromium Compounds (metallic, divalent and trivalent forms)	7440-47-3	1.15E-05	24	EF	Eq. 18	M	0.48%	Y	N	
NPAG_ROAD	ROAD	Stockpile - NPAG (as shown, plus up to TMA corner)	N/A	N/A	N/A	N/A	N/A	N/A	N/A	Cesium	7440-46-2	2.30E-07	N/A	EF	Eq. 18	M	0.48%	Y	N	
NPAG_ROAD	ROAD	Stockpile - NPAG (as shown, plus up to TMA corner)	N/A	N/A	N/A	N/A	N/A	N/A	N/A	Copper	7440-50-8	1.04E-05	24	EF	Eq. 18	M	0.48%	N	N	
NPAG_ROAD	ROAD	Stockpile - NPAG (as shown, plus up to TMA corner)	N/A	N/A	N/A	N/A	N/A	N/A	N/A	Iron (metallic)	7439-89-6	2.63E-03	24	EF	Eq. 18	M	0.48%	Y	N	
NPAG_ROAD	ROAD	Stockpile - NPAG (as shown, plus up to TMA corner)	N/A	N/A	N/A	N/A	N/A	N/A	N/A	Gallium	7440-55-3	3.16E-07	N/A	EF	Eq. 18	M	0.48%	Y	N	
NPAG_ROAD	ROAD	Stockpile - NPAG (as shown, plus up to TMA corner)	N/A	N/A	N/A	N/A	N/A	N/A	N/A	Germanium	7440-56-4	6.31E-09	N/A	EF	Eq. 18	M	0.48%	N	N	
NPAG_ROAD	ROAD	Stockpile - NPAG (as shown, plus up to TMA corner)	N/A	N/A	N/A	N/A	N/A	N/A	N/A	Hafnium	7440-58-6	1.58E-08	24	EF	Eq. 18	M	0.48%	N	N	
NPAG_ROAD	ROAD	Stockpile - NPAG (as shown, plus up to TMA corner)	N/A	N/A	N/A	N/A	N/A	N/A	N/A	Mercury (Hg)	7439-97-6	1.26E-07	24	EF	Eq. 18	M	0.48%	N	N	

NPAG_ROAD	ROAD	Stockpile - NPAG (as shown, plus up to TMA corner)	N/A	N/A	N/A	N/A	N/A	N/A	N/A	Indium	7440-74-6	1.26E-08	24	EF	Eq. 18	M	0.48%	N	N	
NPAG_ROAD	ROAD	Stockpile - NPAG (as shown, plus up to TMA corner)	N/A	N/A	N/A	N/A	N/A	N/A	N/A	Potassium	7440-09-7	6.09E-04	24	EF	Eq. 18	M	0.48%	Y	N	
NPAG_ROAD	ROAD	Stockpile - NPAG (as shown, plus up to TMA corner)	N/A	N/A	N/A	N/A	N/A	N/A	N/A	Lanthanum	7439-91-0	1.46E-06	N/A	EF	Eq. 18	M	0.48%	Y	N	
NPAG_ROAD	ROAD	Stockpile - NPAG (as shown, plus up to TMA corner)	N/A	N/A	N/A	N/A	N/A	N/A	N/A	Lithium (other than hydrides)	7439-93-2	2.49E-06	24	EF	Eq. 18	M	0.48%	N	N	
NPAG_ROAD	ROAD	Stockpile - NPAG (as shown, plus up to TMA corner)	N/A	N/A	N/A	N/A	N/A	N/A	N/A	Lutetium	7439-94-3	6.31E-09	N/A	EF	Eq. 18	M	0.48%	N	N	
NPAG_ROAD	ROAD	Stockpile - NPAG (as shown, plus up to TMA corner)	N/A	N/A	N/A	N/A	N/A	N/A	N/A	Magnesium	7439-95-4	8.97E-04	24	EF	Eq. 18	M	0.48%	Y	N	
NPAG_ROAD	ROAD	Stockpile - NPAG (as shown, plus up to TMA corner)	N/A	N/A	N/A	N/A	N/A	N/A	N/A	Manganese and Manganese Compounds	7439-96-5	5.08E-05	24	EF	Eq. 18	M	0.47%	Y	N	
NPAG_ROAD	ROAD	Stockpile - NPAG (as shown, plus up to TMA corner)	N/A	N/A	N/A	N/A	N/A	N/A	N/A	Molybdenum	7439-98-7	3.79E-07	24	EF	Eq. 18	M	0.48%	N	N	
NPAG_ROAD	ROAD	Stockpile - NPAG (as shown, plus up to TMA corner)	N/A	N/A	N/A	N/A	N/A	N/A	N/A	Sodium	7440-23-5	1.01E-04	N/A	EF	Eq. 18	M	0.48%	Y	N	
NPAG_ROAD	ROAD	Stockpile - NPAG (as shown, plus up to TMA corner)	N/A	N/A	N/A	N/A	N/A	N/A	N/A	Niobium	7440-03-1	7.89E-08	24	EF	Eq. 18	M	0.48%	N	N	
NPAG_ROAD	ROAD	Stockpile - NPAG (as shown, plus up to TMA corner)	N/A	N/A	N/A	N/A	N/A	N/A	N/A	Nickel and Nickel Compounds	7440-02-0	3.63E-06	8760	EF	Eq. 18	M	0.48%	Y	N	
NPAG_ROAD	ROAD	Stockpile - NPAG (as shown, plus up to TMA corner)	N/A	N/A	N/A	N/A	N/A	N/A	N/A	Phosphorus	7723-14-0	2.53E-05	24	EF	Eq. 18	M	0.48%	Y	N	
NPAG_ROAD	ROAD	Stockpile - NPAG (as shown, plus up to TMA corner)	N/A	N/A	N/A	N/A	N/A	N/A	N/A	Lead and Lead Compounds	7439-92-1	6.87E-06	24	EF	Eq. 18	M	0.48%	Y	N	
NPAG_ROAD	ROAD	Stockpile - NPAG (as shown, plus up to TMA corner)	N/A	N/A	N/A	N/A	N/A	N/A	N/A	Lead and Lead Compounds	7439-92-1	6.87E-06	720	EF	Eq. 18	M	0.48%	Y	N	
NPAG_ROAD	ROAD	Stockpile - NPAG (as shown, plus up to TMA corner)	N/A	N/A	N/A	N/A	N/A	N/A	N/A	Rubidium	7440-17-7	7.01E-07	24	EF	Eq. 18	M	0.48%	N	N	
NPAG_ROAD	ROAD	Stockpile - NPAG (as shown, plus up to TMA corner)	N/A	N/A	N/A	N/A	N/A	N/A	N/A	Rhenium	7440-15-5	1.58E-07	N/A	EF	Eq. 18	M	0.48%	Y	N	
NPAG_ROAD	ROAD	Stockpile - NPAG (as shown, plus up to TMA corner)	N/A	N/A	N/A	N/A	N/A	N/A	N/A	Antimony	7440-36-0	3.47E-07	24	EF	Eq. 18	M	0.48%	N	N	
NPAG_ROAD	ROAD	Stockpile - NPAG (as shown, plus up to TMA corner)	N/A	N/A	N/A	N/A	N/A	N/A	N/A	Scandium	7440-20-2	5.68E-07	N/A	EF	Eq. 18	M	0.48%	Y	N	
NPAG_ROAD	ROAD	Stockpile - NPAG (as shown, plus up to TMA corner)	N/A	N/A	N/A	N/A	N/A	N/A	N/A	Selenium	7782-49-2	5.37E-07	24	EF	Eq. 18	M	0.48%	N	N	
NPAG_ROAD	ROAD	Stockpile - NPAG (as shown, plus up to TMA corner)	N/A	N/A	N/A	N/A	N/A	N/A	N/A	Tin	7440-31-5	6.95E-07	24	EF	Eq. 18	M	0.48%	N	N	
NPAG_ROAD	ROAD	Stockpile - NPAG (as shown, plus up to TMA corner)	N/A	N/A	N/A	N/A	N/A	N/A	N/A	Strontium	7440-24-6	7.67E-06	24	EF	Eq. 18	M	0.48%	N	N	
NPAG_ROAD	ROAD	Stockpile - NPAG (as shown, plus up to TMA corner)	N/A	N/A	N/A	N/A	N/A	N/A	N/A	Tantalum	7440-25-7	3.16E-09	24	EF	Eq. 18	M	0.48%	N	N	
NPAG_ROAD	ROAD	Stockpile - NPAG (as shown, plus up to TMA corner)	N/A	N/A	N/A	N/A	N/A	N/A	N/A	Terbium	7440-27-9	1.26E-08	N/A	EF	Eq. 18	M	0.48%	N	N	
NPAG_ROAD	ROAD	Stockpile - NPAG (as shown, plus up to TMA corner)	N/A	N/A	N/A	N/A	N/A	N/A	N/A	Tellurium (except hydrogen telluride)	13494-80-9	8.84E-07	24	EF	Eq. 18	M	0.48%	N	N	
NPAG_ROAD	ROAD	Stockpile - NPAG (as shown, plus up to TMA corner)	N/A	N/A	N/A	N/A	N/A	N/A	N/A	Thorium	7440-29-1	6.31E-07	N/A	EF	Eq. 18	M	0.48%	Y	N	
NPAG_ROAD	ROAD	Stockpile - NPAG (as shown, plus up to TMA corner)	N/A	N/A	N/A	N/A	N/A	N/A	N/A	Titanium	7440-32-6	1.33E-04	24	EF	Eq. 18	M	0.48%	Y	N	
NPAG_ROAD	ROAD	Stockpile - NPAG (as shown, plus up to TMA corner)	N/A	N/A	N/A	N/A	N/A	N/A	N/A	Thallium	7440-28-0	3.16E-07	24	EF	Eq. 18	M	0.48%	Y	N	
NPAG_ROAD	ROAD	Stockpile - NPAG (as shown, plus up to TMA corner)	N/A	N/A	N/A	N/A	N/A	N/A	N/A	Uranium and Uranium Compounds - U in PM10	7440-61-1	6.31E-07	8760	EF	Eq. 18	M	0.48%	Y	N	
NPAG_ROAD	ROAD	Stockpile - NPAG (as shown, plus up to TMA corner)	N/A	N/A	N/A	N/A	N/A	N/A	N/A	Vanadium	7440-62-2	5.05E-06	24	EF	Eq. 18	M	0.48%	Y	N	
NPAG_ROAD	ROAD	Stockpile - NPAG (as shown, plus up to TMA corner)	N/A	N/A	N/A	N/A	N/A	N/A	N/A	Tungsten	7440-33-7	1.18E-06	24	EF	Eq. 18	M	0.48%	N	N	
NPAG_ROAD	ROAD	Stockpile - NPAG (as shown, plus up to TMA corner)	N/A	N/A	N/A	N/A	N/A	N/A	N/A	Yttrium	7440-65-5	3.44E-07	24	EF	Eq. 18	M	0.48%	N	N	
NPAG_ROAD	ROAD	Stockpile - NPAG (as shown, plus up to TMA corner)	N/A	N/A	N/A	N/A	N/A	N/A	N/A	Ytterbium	7440-64-4	3.47E-08	N/A	EF	Eq. 18	M	0.48%	N	N	
NPAG_ROAD	ROAD	Stockpile - NPAG (as shown, plus up to TMA corner)	N/A	N/A	N/A	N/A	N/A	N/A	N/A	Zinc	7440-66-6	8.05E-05	24	EF	Eq. 18	M	0.48%	Y	N	
NPAG_ROAD	ROAD	Stockpile - NPAG (as shown, plus up to TMA corner)	N/A	N/A	N/A	N/A	N/A	N/A	N/A	Zirconium	7440-67-7	8.05E-05	24	EF	Eq. 18	M	0.48%	Y	N	
ROM STK	ROM STK	Stockpile - HGO/MGO Stockpile - NPAG Base	N/A	N/A	N/A	N/A	N/A	N/A	N/A	Suspended particulate matter	N/A-TSP	4.42E-02	24	EF	Eq. 18	M	0.18%	Y	N	
ROM STK	ROM STK	Stockpile - HGO/MGO Stockpile - NPAG Base	N/A	N/A	N/A	N/A	N/A	N/A	N/A	Silver	7440-22-4	2.48E-07	24	EF	Eq. 18	M	0.46%	N	N	
ROM STK	ROM STK	Stockpile - HGO/MGO Stockpile - NPAG Base	N/A	N/A	N/A	N/A	N/A	N/A	N/A	Aluminum	7429-90-5	2.10E-03	24	EF	Eq. 18	M	0.46%	Y	N	
ROM STK	ROM STK	Stockpile - HGO/MGO Stockpile - NPAG Base	N/A	N/A	N/A	N/A	N/A	N/A	N/A	Arsenic and compounds	7440-38-2	4.19E-06	24	EF	Eq. 18	M	0.46%	Y	N	
ROM STK	ROM STK	Stockpile - HGO/MGO Stockpile - NPAG Base	N/A	N/A	N/A	N/A	N/A	N/A	N/A	Gold	7440-57-5	4.54E-08	24	EF	Eq. 18	M	0.46%	N	N	
ROM STK	ROM STK	Stockpile - HGO/MGO Stockpile - NPAG Base	N/A	N/A	N/A	N/A	N/A	N/A	N/A	Boron	7440-42-8	1.66E-06	24	EF	Eq. 18	M	0.46%	N	N	
ROM STK	ROM STK	Stockpile - HGO/MGO Stockpile - NPAG Base	N/A	N/A	N/A	N/A	N/A	N/A	N/A	Barium - total water soluble	7440-39-3	9.68E-06	24	EF	Eq. 18	M	0.46%	Y	N	
ROM STK	ROM STK	Stockpile - HGO/MGO Stockpile - NPAG Base	N/A	N/A	N/A	N/A	N/A	N/A	N/A	Beryllium and Beryllium Compounds	7440-41-7	6.05E-08	24	EF	Eq. 18	M	0.46%	Y	N	
ROM STK	ROM STK	Stockpile - HGO/MGO Stockpile - NPAG Base	N/A	N/A	N/A	N/A	N/A	N/A	N/A	Bismuth	7440-69-9	7.56E-07	24	EF	Eq. 18	M	0.46%	N	N	
ROM STK	ROM STK	Stockpile - HGO/MGO Stockpile - NPAG Base	N/A	N/A	N/A	N/A	N/A	N/A	N/A	Calcium carbonate	471-34-1	1.56E-03	24	EF	Eq. 18	M	0.46%	Y	N	
ROM STK	ROM STK	Stockpile - HGO/MGO Stockpile - NPAG Base	N/A	N/A	N/A	N/A	N/A	N/A	N/A	Cadmium and Cadmium Compounds	7440-43-9	5.45E-07	24	EF	Eq. 18	M	0.46%	Y	N	
ROM STK	ROM STK	Stockpile - HGO/MGO Stockpile - NPAG Base	N/A	N/A	N/A	N/A	N/A	N/A	N/A	Cerium	7440-45-1	2.36E-06	24	EF	Eq. 18	M	0.46%	N	N	
ROM STK	ROM STK	Stockpile - HGO/MGO Stockpile - NPAG Base	N/A	N/A	N/A	N/A	N/A	N/A	N/A	Cobalt	7440-48-4	1.33E-06	24	EF	Eq. 18	M	0.46%	Y	N	
ROM STK	ROM STK	Stockpile - HGO/MGO Stockpile - NPAG Base	N/A	N/A	N/A	N/A	N/A	N/A	N/A	Chromium Compounds (metallic, divalent and trivalent forms)	7440-47-3	1.10E-05	24	EF	Eq. 18	M	0.46%	Y	N	
ROM STK	ROM STK	Stockpile - HGO/MGO Stockpile - NPAG Base	N/A	N/A	N/A	N/A	N/A	N/A	N/A	Cesium	7440-46-2	2.21E-07	N/A	EF	Eq. 18	M	0.46%	Y	N	
ROM STK	ROM STK	Stockpile - HGO/MGO Stockpile - NPAG Base	N/A	N/A	N/A	N/A	N/A	N/A	N/A	Copper	7440-50-8	9.97E-06	24	EF	Eq. 18	M	0.46%	N	N	
ROM STK	ROM STK	Stockpile - HGO/MGO Stockpile - NPAG Base	N/A	N/A	N/A	N/A	N/A	N/A	N/A	Iron (metallic)	7439-89-6	2.52E-03	24	EF	Eq. 18	M	0.46%	Y	N	
ROM STK	ROM STK	Stockpile - HGO/MGO Stockpile - NPAG Base	N/A	N/A	N/A	N/A	N/A	N/A	N/A	Gallium	7440-55-3	3.03E-07	N/A	EF	Eq. 18	M	0.46%	Y	N	

ROM STK	ROM STK	Stockpile - HGO/MGO Stockpile - NPAG Base	N/A	N/A	N/A	N/A	N/A	N/A	N/A	Germanium	7440-56-4	6.05E-09	N/A	EF	Eq. 18	M	0.46%	N	N	
ROM STK	ROM STK	Stockpile - HGO/MGO Stockpile - NPAG Base	N/A	N/A	N/A	N/A	N/A	N/A	N/A	Hafnium	7440-58-6	1.51E-08	24	EF	Eq. 18	M	0.46%	N	N	
ROM STK	ROM STK	Stockpile - HGO/MGO Stockpile - NPAG Base	N/A	N/A	N/A	N/A	N/A	N/A	N/A	Mercury (Hg)	7439-97-6	1.21E-07	24	EF	Eq. 18	M	0.46%	N	N	
ROM STK	ROM STK	Stockpile - HGO/MGO Stockpile - NPAG Base	N/A	N/A	N/A	N/A	N/A	N/A	N/A	Indium	7440-74-6	1.21E-08	24	EF	Eq. 18	M	0.46%	N	N	
ROM STK	ROM STK	Stockpile - HGO/MGO Stockpile - NPAG Base	N/A	N/A	N/A	N/A	N/A	N/A	N/A	Potassium	7440-09-7	5.84E-04	24	EF	Eq. 18	M	0.46%	Y	N	
ROM STK	ROM STK	Stockpile - HGO/MGO Stockpile - NPAG Base	N/A	N/A	N/A	N/A	N/A	N/A	N/A	Lanthanum	7439-91-0	1.39E-06	N/A	EF	Eq. 18	M	0.46%	Y	N	
ROM STK	ROM STK	Stockpile - HGO/MGO Stockpile - NPAG Base	N/A	N/A	N/A	N/A	N/A	N/A	N/A	Lithium (other than hydrides)	7439-93-2	2.39E-06	24	EF	Eq. 18	M	0.46%	N	N	
ROM STK	ROM STK	Stockpile - HGO/MGO Stockpile - NPAG Base	N/A	N/A	N/A	N/A	N/A	N/A	N/A	Lutetium	7439-94-3	6.05E-09	N/A	EF	Eq. 18	M	0.46%	N	N	
ROM STK	ROM STK	Stockpile - HGO/MGO Stockpile - NPAG Base	N/A	N/A	N/A	N/A	N/A	N/A	N/A	Magnesium	7439-95-4	8.59E-04	24	EF	Eq. 18	M	0.46%	Y	N	
ROM STK	ROM STK	Stockpile - HGO/MGO Stockpile - NPAG Base	N/A	N/A	N/A	N/A	N/A	N/A	N/A	Manganese and Manganese Compounds	7439-96-5	4.87E-05	24	EF	Eq. 18	M	0.45%	Y	N	
ROM STK	ROM STK	Stockpile - HGO/MGO Stockpile - NPAG Base	N/A	N/A	N/A	N/A	N/A	N/A	N/A	Molybdenum	7439-98-7	3.63E-07	24	EF	Eq. 18	M	0.46%	N	N	
ROM STK	ROM STK	Stockpile - HGO/MGO Stockpile - NPAG Base	N/A	N/A	N/A	N/A	N/A	N/A	N/A	Sodium	7440-23-5	9.68E-05	N/A	EF	Eq. 18	M	0.46%	Y	N	
ROM STK	ROM STK	Stockpile - HGO/MGO Stockpile - NPAG Base	N/A	N/A	N/A	N/A	N/A	N/A	N/A	Niobium	7440-03-1	7.56E-08	24	EF	Eq. 18	M	0.46%	N	N	
ROM STK	ROM STK	Stockpile - HGO/MGO Stockpile - NPAG Base	N/A	N/A	N/A	N/A	N/A	N/A	N/A	Nickel and Nickel Compounds	7440-02-0	3.48E-06	8760	EF	Eq. 18	M	0.46%	Y	N	
ROM STK	ROM STK	Stockpile - HGO/MGO Stockpile - NPAG Base	N/A	N/A	N/A	N/A	N/A	N/A	N/A	Phosphorus	7723-14-0	2.42E-05	24	EF	Eq. 18	M	0.46%	Y	N	
ROM STK	ROM STK	Stockpile - HGO/MGO Stockpile - NPAG Base	N/A	N/A	N/A	N/A	N/A	N/A	N/A	Lead and Lead Compounds	7439-92-1	6.58E-06	24	EF	Eq. 18	M	0.46%	Y	N	
ROM STK	ROM STK	Stockpile - HGO/MGO Stockpile - NPAG Base	N/A	N/A	N/A	N/A	N/A	N/A	N/A	Lead and Lead Compounds	7439-92-1	6.58E-06	720	EF	Eq. 18	M	0.46%	Y	N	
ROM STK	ROM STK	Stockpile - HGO/MGO Stockpile - NPAG Base	N/A	N/A	N/A	N/A	N/A	N/A	N/A	Rubidium	7440-17-7	6.72E-07	24	EF	Eq. 18	M	0.46%	N	N	
ROM STK	ROM STK	Stockpile - HGO/MGO Stockpile - NPAG Base	N/A	N/A	N/A	N/A	N/A	N/A	N/A	Rhenium	7440-15-5	1.51E-07	N/A	EF	Eq. 18	M	0.46%	Y	N	
ROM STK	ROM STK	Stockpile - HGO/MGO Stockpile - NPAG Base	N/A	N/A	N/A	N/A	N/A	N/A	N/A	Antimony	7440-36-0	3.33E-07	24	EF	Eq. 18	M	0.46%	N	N	
ROM STK	ROM STK	Stockpile - HGO/MGO Stockpile - NPAG Base	N/A	N/A	N/A	N/A	N/A	N/A	N/A	Scandium	7440-20-2	5.45E-07	N/A	EF	Eq. 18	M	0.46%	Y	N	
ROM STK	ROM STK	Stockpile - HGO/MGO Stockpile - NPAG Base	N/A	N/A	N/A	N/A	N/A	N/A	N/A	Selenium	7782-49-2	5.14E-07	24	EF	Eq. 18	M	0.46%	N	N	
ROM STK	ROM STK	Stockpile - HGO/MGO Stockpile - NPAG Base	N/A	N/A	N/A	N/A	N/A	N/A	N/A	Tin	7440-31-5	6.66E-07	24	EF	Eq. 18	M	0.46%	N	N	
ROM STK	ROM STK	Stockpile - HGO/MGO Stockpile - NPAG Base	N/A	N/A	N/A	N/A	N/A	N/A	N/A	Strontium	7440-24-6	7.35E-06	24	EF	Eq. 18	M	0.46%	N	N	
ROM STK	ROM STK	Stockpile - HGO/MGO Stockpile - NPAG Base	N/A	N/A	N/A	N/A	N/A	N/A	N/A	Tantalum	7440-25-7	3.03E-09	24	EF	Eq. 18	M	0.46%	N	N	
ROM STK	ROM STK	Stockpile - HGO/MGO Stockpile - NPAG Base	N/A	N/A	N/A	N/A	N/A	N/A	N/A	Terbium	7440-27-9	1.21E-08	N/A	EF	Eq. 18	M	0.46%	N	N	
ROM STK	ROM STK	Stockpile - HGO/MGO Stockpile - NPAG Base	N/A	N/A	N/A	N/A	N/A	N/A	N/A	Tellurium (except hydrogen telluride)	13494-80-9	8.47E-07	24	EF	Eq. 18	M	0.46%	N	N	
ROM STK	ROM STK	Stockpile - HGO/MGO Stockpile - NPAG Base	N/A	N/A	N/A	N/A	N/A	N/A	N/A	Thorium	7440-29-1	6.05E-07	N/A	EF	Eq. 18	M	0.46%	Y	N	
ROM STK	ROM STK	Stockpile - HGO/MGO Stockpile - NPAG Base	N/A	N/A	N/A	N/A	N/A	N/A	N/A	Titanium	7440-32-6	1.27E-04	24	EF	Eq. 18	M	0.46%	Y	N	
ROM STK	ROM STK	Stockpile - HGO/MGO Stockpile - NPAG Base	N/A	N/A	N/A	N/A	N/A	N/A	N/A	Thallium	7440-28-0	3.03E-07	24	EF	Eq. 18	M	0.46%	Y	N	
ROM STK	ROM STK	Stockpile - HGO/MGO Stockpile - NPAG Base	N/A	N/A	N/A	N/A	N/A	N/A	N/A	Uranium and Uranium Compounds - U in PM10	7440-61-1	6.05E-07	8760	EF	Eq. 18	M	0.46%	Y	N	
ROM STK	ROM STK	Stockpile - HGO/MGO Stockpile - NPAG Base	N/A	N/A	N/A	N/A	N/A	N/A	N/A	Vanadium	7440-62-2	4.84E-06	24	EF	Eq. 18	M	0.46%	Y	N	
ROM STK	ROM STK	Stockpile - HGO/MGO Stockpile - NPAG Base	N/A	N/A	N/A	N/A	N/A	N/A	N/A	Tungsten	7440-33-7	1.13E-06	24	EF	Eq. 18	M	0.46%	N	N	
ROM STK	ROM STK	Stockpile - HGO/MGO Stockpile - NPAG Base	N/A	N/A	N/A	N/A	N/A	N/A	N/A	Yttrium	7440-65-5	3.30E-07	24	EF	Eq. 18	M	0.46%	N	N	
ROM STK	ROM STK	Stockpile - HGO/MGO Stockpile - NPAG Base	N/A	N/A	N/A	N/A	N/A	N/A	N/A	Ytterbium	7440-64-4	3.33E-08	N/A	EF	Eq. 18	M	0.46%	N	N	
ROM STK	ROM STK	Stockpile - HGO/MGO Stockpile - NPAG Base	N/A	N/A	N/A	N/A	N/A	N/A	N/A	Zinc	7440-66-6	7.72E-05	24	EF	Eq. 18	M	0.46%	Y	N	
ROM STK	ROM STK	Stockpile - HGO/MGO Stockpile - NPAG Base	N/A	N/A	N/A	N/A	N/A	N/A	N/A	Zirconium	7440-67-7	7.72E-05	24	EF	Eq. 18	M	0.46%	Y	N	
EOC	EOC	Stockpile - Rock Quarry	N/A	N/A	N/A	N/A	N/A	N/A	N/A	Suspended particulate matter	N/A-TSP	1.84E-02	24	EF	Eq. 18	M	0.08%	Y	N	
EOC	EOC	Stockpile - Rock Quarry	N/A	N/A	N/A	N/A	N/A	N/A	N/A	Silver	7440-22-4	1.04E-07	24	EF	Eq. 18	M	0.19%	N	N	
EOC	EOC	Stockpile - Rock Quarry	N/A	N/A	N/A	N/A	N/A	N/A	N/A	Aluminum	7429-90-5	8.75E-04	24	EF	Eq. 18	M	0.19%	Y	N	
EOC	EOC	Stockpile - Rock Quarry	N/A	N/A	N/A	N/A	N/A	N/A	N/A	Arsenic and compounds	7440-38-2	1.75E-06	24	EF	Eq. 18	M	0.19%	Y	N	
EOC	EOC	Stockpile - Rock Quarry	N/A	N/A	N/A	N/A	N/A	N/A	N/A	Gold	7440-57-5	1.89E-08	24	EF	Eq. 18	M	0.19%	N	N	
EOC	EOC	Stockpile - Rock Quarry	N/A	N/A	N/A	N/A	N/A	N/A	N/A	Boron	7440-42-8	6.95E-07	24	EF	Eq. 18	M	0.19%	N	N	
EOC	EOC	Stockpile - Rock Quarry	N/A	N/A	N/A	N/A	N/A	N/A	N/A	Barium - total water soluble	7440-39-3	4.04E-06	24	EF	Eq. 18	M	0.19%	Y	N	
EOC	EOC	Stockpile - Rock Quarry	N/A	N/A	N/A	N/A	N/A	N/A	N/A	Beryllium and Beryllium Compounds	7440-41-7	2.53E-08	24	EF	Eq. 18	M	0.19%	Y	N	
EOC	EOC	Stockpile - Rock Quarry	N/A	N/A	N/A	N/A	N/A	N/A	N/A	Bismuth	7440-69-9	3.16E-07	24	EF	Eq. 18	M	0.19%	N	N	
EOC	EOC	Stockpile - Rock Quarry	N/A	N/A	N/A	N/A	N/A	N/A	N/A	Calcium carbonate	471-34-1	6.53E-04	24	EF	Eq. 18	M	0.19%	Y	N	
EOC	EOC	Stockpile - Rock Quarry	N/A	N/A	N/A	N/A	N/A	N/A	N/A	Cadmium and Cadmium Compounds	7440-43-9	2.27E-07	24	EF	Eq. 18	M	0.19%	Y	N	
EOC	EOC	Stockpile - Rock Quarry	N/A	N/A	N/A	N/A	N/A	N/A	N/A	Cerium	7440-45-1	9.86E-07	24	EF	Eq. 18	M	0.19%	N	N	
EOC	EOC	Stockpile - Rock Quarry	N/A	N/A	N/A	N/A	N/A	N/A	N/A	Cobalt	7440-48-4	5.56E-07	24	EF	Eq. 18	M	0.19%	Y	N	
EOC	EOC	Stockpile - Rock Quarry	N/A	N/A	N/A	N/A	N/A	N/A	N/A	Chromium Compounds (metallic, divalent and trivalent forms)	7440-47-3	4.61E-06	24	EF	Eq. 18	M	0.19%	Y	N	
EOC	EOC	Stockpile - Rock Quarry	N/A	N/A	N/A	N/A	N/A	N/A	N/A	Cesium	7440-46-2	9.22E-08	N/A	EF	Eq. 18	M	0.19%	Y	N	
EOC	EOC	Stockpile - Rock Quarry	N/A	N/A	N/A	N/A	N/A	N/A	N/A	Copper	7440-50-8	4.16E-06	24	EF	Eq. 18	M	0.19%	N	N	
EOC	EOC	Stockpile - Rock Quarry	N/A	N/A	N/A	N/A	N/A	N/A	N/A	Iron (metallic)	7439-89-6	1.05E-03	24	EF	Eq. 18	M	0.19%	Y	N	
EOC	EOC	Stockpile - Rock Quarry	N/A	N/A	N/A	N/A	N/A	N/A	N/A	Gallium	7440-55-3	1.26E-07	N/A	EF	Eq. 18	M	0.19%	Y	N	
EOC	EOC	Stockpile - Rock Quarry	N/A	N/A	N/A	N/A	N/A	N/A	N/A	Germanium	7440-56-4	2.53E-09	N/A	EF	Eq. 18	M	0.19%	N	N	
EOC	EOC	Stockpile - Rock Quarry	N/A	N/A	N/A	N/A	N/A	N/A	N/A	Hafnium	7440-58-6	6.31E-09	24	EF	Eq. 18	M	0.19%	N	N	
EOC	EOC	Stockpile - Rock Quarry	N/A	N/A	N/A	N/A	N/A	N/A	N/A	Mercury (Hg)	7439-97-6	5.05E-08	24	EF	Eq. 18	M	0.19%	N	N	
EOC	EOC	Stockpile - Rock Quarry	N/A	N/A	N/A	N/A	N/A	N/A	N/A	Indium	7440-74-6	5.05E-09	24	EF	Eq. 18	M	0.19%	N	N	
EOC	EOC	Stockpile - Rock Quarry	N/A	N/A	N/A	N/A	N/A	N/A	N/A	Potassium	7440-09-7	2.44E-04	24	EF	Eq. 18	M	0.19%	Y	N	
EOC	EOC	Stockpile - Rock Quarry	N/A	N/A	N/A	N/A	N/A	N/A	N/A	Lanthanum	7439-91-0	5.82E-07	N/A	EF	Eq. 18	M	0.19%	Y	N	
EOC	EOC	Stockpile - Rock Quarry	N/A	N/A	N/A	N/A	N/A	N/A	N/A	Lithium (other than hydrides)	7439-93-2	9.96E-07	24	EF	Eq. 18	M	0.19%	N	N	
EOC	EOC	Stockpile - Rock Quarry	N/A	N/A	N/A	N/A	N/A	N/A	N/A	Lutetium	7439-94-3	2.53E-09	N/A	EF	Eq. 18	M	0.19%	N	N	
EOC	EOC	Stockpile - Rock Quarry	N/A	N/A	N/A	N/A	N/A	N/A	N/A	Magnesium	7439-95-4	3.59E-04	24	EF	Eq. 18	M	0.19%	Y	N	
EOC	EOC	Stockpile - Rock Quarry	N/A	N/A	N/A	N/A	N/A	N/A	N/A	Manganese and Manganese Compounds	7439-96-5	2.03E-05	24	EF	Eq. 18	M	0.19%	Y	N	
EOC	EOC	Stockpile - Rock Quarry	N/A	N/A	N/A	N/A	N/A	N/A	N/A	Molybdenum	7439-98-7	1.52E-07	24	EF	Eq. 18	M	0.19%	N	N	
EOC	EOC	Stockpile - Rock Quarry	N/A	N/A	N/A	N/A	N/A	N/A	N/A	Sodium	7440-23-5	4.04E-05	N/A	EF	Eq. 18	M	0.19%	Y	N	
EOC	EOC	Stockpile - Rock Quarry	N/A	N/A	N/A	N/A	N/A	N/A	N/A	Niobium	7440-03-1	3.16E-08	24	EF	Eq. 18	M	0.19%	N	N	
EOC	EOC	Stockpile - Rock Quarry	N/A	N/A	N/A	N/A	N/A	N/A	N/A	Nickel and Nickel Compounds	7440-02-0	1.45E-06	8760	EF	Eq. 18	M	0.19%	Y	N	
EOC	EOC	Stockpile - Rock Quarry	N/A	N/A	N/A	N/A	N/A	N/A	N/A	Phosphorus	7723-14-0	1.01E-05	24	EF	Eq. 18	M	0.19%	Y	N	
EOC	EOC	Stockpile - Rock Quarry	N/A	N/A	N/A	N/A	N/A	N/A	N/A	Lead and Lead Compounds	7439-92-1	2.75E-06	24	EF	Eq. 18	M	0.19%	Y	N	
EOC	EOC	Stockpile - Rock Quarry	N/A	N/A	N/A	N/A	N/A	N/A	N/A	Lead and Lead Compounds	7439-92-1	2.75E-06	720	EF	Eq. 18	M	0.19%	Y	N	
EOC	EOC	Stockpile - Rock Quarry	N/A	N/A	N/A	N/A	N/A	N/A	N/A	Rubidium	7440-17-7	2.80E-07	24	EF	Eq. 18	M	0.19%	N	N	
EOC	EOC	Stockpile - Rock Quarry	N/A	N/A	N/A	N/A	N/A	N/A	N/A	Rhenium	7440-15-5	6.31E-08	N/A	EF	Eq. 18	M	0.19%	Y	N	
EOC	EOC	Stockpile - Rock Quarry	N/A	N/A	N/A	N/A	N/A	N/A	N/A	Antimony	7440-36-0	1.39E-07	24	EF	Eq. 18	M	0.19%	N	N	
EOC	EOC	Stockpile - Rock Quarry	N/A	N/A	N/A	N/A	N/A	N/A	N/A	Scandium	7440-20-2	2.27E-07	N/A	EF	Eq. 18	M	0.19%	Y	N	
EOC	EOC	Stockpile - Rock Quarry	N/A	N/A	N/A	N/A	N/A	N/A	N/A	Selenium	7782-49-2	2.15E-07	24	EF	Eq. 18	M	0.19%	N	N	
EOC	EOC	Stockpile - Rock Quarry	N/A	N/A	N/A	N/A	N/A	N/A	N/A	Tin	7440-31-5	2.78E-07	24	EF	Eq. 18	M	0.19%	N	N	
EOC	EOC	Stockpile - Rock Quarry	N/A	N/A	N/A	N/A	N/A	N/A	N/A	Strontium	7440-24-6	3.07E-06	24	EF	Eq. 18	M	0.19%	N	N	
EOC	EOC	Stockpile - Rock Quarry	N/A	N/A	N/A	N/A	N/A	N/A	N/A	Tantalum	7440-25-7	1.26E-09	24	EF	Eq. 18	M	0.19%	N	N	
EOC	EOC	Stockpile - Rock Quarry	N/A	N/A	N/A	N/A	N/A	N/A	N/A	Terbium	7440-27-9	5.05E-09	N/A	EF	Eq. 18	M	0.19%	N	N	

EOC	EOC	Stockpile - Rock Quarry	N/A	N/A	N/A	N/A	N/A	N/A	N/A	Tellurium (except hydrogen telluride)	13494-80-9	3.54E-07	24	EF	Eq. 18	M	0.19%	N	N	
EOC	EOC	Stockpile - Rock Quarry	N/A	N/A	N/A	N/A	N/A	N/A	N/A	Thorium	7440-29-1	2.53E-07	N/A	EF	Eq. 18	M	0.19%	Y	N	
EOC	EOC	Stockpile - Rock Quarry	N/A	N/A	N/A	N/A	N/A	N/A	N/A	Titanium	7440-32-6	5.30E-05	24	EF	Eq. 18	M	0.19%	Y	N	
EOC	EOC	Stockpile - Rock Quarry	N/A	N/A	N/A	N/A	N/A	N/A	N/A	Thallium	7440-28-0	1.26E-07	24	EF	Eq. 18	M	0.19%	Y	N	
EOC	EOC	Stockpile - Rock Quarry	N/A	N/A	N/A	N/A	N/A	N/A	N/A	Uranium and Uranium Compounds - U in PM10	7440-61-1	2.53E-07	8760	EF	Eq. 18	M	0.19%	Y	N	
EOC	EOC	Stockpile - Rock Quarry	N/A	N/A	N/A	N/A	N/A	N/A	N/A	Vanadium	7440-62-2	2.02E-06	24	EF	Eq. 18	M	0.19%	Y	N	
EOC	EOC	Stockpile - Rock Quarry	N/A	N/A	N/A	N/A	N/A	N/A	N/A	Tungsten	7440-33-7	4.72E-07	24	EF	Eq. 18	M	0.19%	N	N	
EOC	EOC	Stockpile - Rock Quarry	N/A	N/A	N/A	N/A	N/A	N/A	N/A	Yttrium	7440-65-5	1.38E-07	24	EF	Eq. 18	M	0.19%	N	N	
EOC	EOC	Stockpile - Rock Quarry	N/A	N/A	N/A	N/A	N/A	N/A	N/A	Ytterbium	7440-64-4	1.39E-08	N/A	EF	Eq. 18	M	0.19%	N	N	
EOC	EOC	Stockpile - Rock Quarry	N/A	N/A	N/A	N/A	N/A	N/A	N/A	Zinc	7440-66-6	3.22E-05	24	EF	Eq. 18	M	0.19%	Y	N	
EOC	EOC	Stockpile - Rock Quarry	N/A	N/A	N/A	N/A	N/A	N/A	N/A	Zirconium	7440-67-7	3.22E-05	24	EF	Eq. 18	M	0.19%	Y	N	

Notes:

EF	Emission Factor
MB	Mass Balance
EC	Engineering Calculation
H	Highest Quality
AA	Above Average
A	Average
M	Marginal/Uncertain

Emission Summary and Dispersion Modelling Report
New Gold - Rainy River Mine

Screening-Out Contaminants/Sources that are Emitted in Negligible Amounts
A negligibility assessment is completed for all contaminants from all significant sources.

Rural Dispersion Factor (µg/m^3 per g/s) = 10,000

Negligibility Screening Based on Emission Threshold: Contaminants with MECP POI Limits

Contaminant	CAS	MECP POI Limit (µg/m^3)	Averaging Period (hours)	Dispersion Factor (µg/m^3 per g/s)	Emission Rate (g/s)	Emission Threshold (g/s)	Contaminant Significant	Limiting Effect	Source	Category	Notes
Aluminum	7429-90-5	12	24	4,107	4.52E-01	1.46E-03	Y	Health	SL-JSL	B2	
Ammonia	7664-41-7	100	24	4,107	7.59E-02	1.22E-02	Y	Health	Standard	B1	URT - Note 4, Table 4
Antimony	7440-36-0	25	24	4,107	7.18E-05	3.04E-03	N	Health	Standard	B1	
Arsenic and compounds	7440-38-2	0.3	24	4,107	9.05E-04	3.65E-05	Y	Health	Guideline	B1	
Barium - total water soluble	7440-39-3	10	24	4,107	2.09E-03	1.22E-03	Y	Health	Guideline	B1	
Beryllium and Beryllium Compounds	7440-41-7	0.01	24	4,107	1.31E-05	1.22E-06	Y	Health	Standard	B1	
Bismuth	7440-69-9	2.5	24	4,107	1.63E-04	3.04E-04	N	Health	SL-JSL	B2	
Boron	7440-42-8	120	24	4,107	3.59E-04	1.46E-02	N	Particulate	Standard	B1	
Cadmium and Cadmium Compounds	7440-43-9	0.025	24	4,107	1.18E-04	3.04E-06	Y	Health	Standard	B1	URT - Note 4, Table 4
Calcium carbonate	471-34-1	15	24	4,107	3.38E-01	1.83E-03	Y	Health & Particulate	SL-JSL	B2	
Calcium chloride	10043-52-4	15	24	4,107	1.56E-04	1.83E-03	N	Health & Particulate	SL-JSL	B2	
Calcium oxide	1305-78-8	10	24	4,107	1.50E-05	1.22E-03	N	Corrosion	Standard	B1	
Carbon monoxide	630-08-0	6000	0.5	12,142	1.87E+01	2.47E-01	Y	Health	Standard	B1	Note 9
Cerium	7440-45-1	4.5	24	4,107	5.10E-04	5.48E-04	N	Health	SL-JSL	B2	
Chromium Compounds (metallic, divalent and trivalent forms)	7440-47-3	0.5	24	4,107	2.38E-03	6.09E-05	Y	Health	Standard	B1	Note 11a URT - Note 4, Table 4
Cobalt	7440-48-4	0.1	24	4,107	2.88E-04	1.22E-05	Y	Health	Guideline	B1	
Copper	7440-50-8	50	24	4,107	2.15E-03	6.09E-03	N	Health	Standard	B1	
Gold	7440-57-5	1.25	24	4,107	9.79E-06	1.52E-04	N	Health	SL-JSL	B2	
Hafnium	7440-58-6	2.5	24	4,107	3.26E-06	3.04E-04	N	Health	SL-JSL	B2	
Hydrogen chloride	7647-01-0	20	24	4,107	6.61E-05	2.43E-03	N	Health	Standard	B1	URT - Note 4, Table 4
Hydrogen cyanide	74-90-8	8	24	4,107	2.29E-01	9.74E-04	Y	Health	Standard	B1	URT - Note 4, Table 4
Indium	7440-74-6	0.5	24	4,107	2.61E-06	6.09E-05	N	Health	SL-JSL	B2	
Iron (metallic)	7439-89-6	4	24	4,107	5.44E-01	4.87E-04	Y	Health	Standard	B1	
Lead and Lead Compounds	7439-92-1	0.5	24	4,107	1.42E-03	6.09E-05	Y	Health	Standard	B1	Note 2 URT - Note 4, Table 4
Lead and Lead Compounds	7439-92-1	0.2	720	1,585	1.42E-03	6.31E-05	Y	Health	Standard	B1	Note 2 URT - Note 4, Table 4
Lithium (other than hydrides)	7439-93-2	20	24	4,107	5.15E-04	2.43E-03	N	Health	Standard	B1	
Magnesium	7439-95-4	72	24	4,107	1.85E-01	8.77E-03	Y	Health	SL-MD	B2	
Manganese and Manganese Compounds	7439-96-5	0.4	24	4,107	1.08E-02	4.87E-05	Y	Health	Standard	B1	URT - Note 4, Table 4
Mercury (Hg)	7439-97-6	2	24	4,107	2.61E-05	2.43E-04	N	Health	Standard	B1	
Molybdenum	7439-98-7	120	24	4,107	7.84E-05	1.46E-02	N	Particulate	Guideline	B1	
Nickel and Nickel Compounds	7440-02-0	0.04	8760	787	7.52E-04	2.54E-05	Y	Health	Standard	B1	Note 19, Table 2, 3 URT - Note 4, Table 4
Niobium	7440-03-1	2.5	24	4,107	1.63E-05	3.04E-04	N	Health	SL-JSL	B2	
Nitrogen oxides	10102-44-0	400	1	10,000	9.24E+00	2.00E-02	Y	Health	Standard	B1	Notes 2, 17
Nitrogen oxides	10102-44-0	200	24	4,107	4.06E+00	2.43E-02	Y	Health	Standard	B1	Notes 2, 17
Phosphorus	7723-14-0	0.5	24	4,107	5.22E-03	6.09E-05	Y	Health	SL-MD	B2	
Potassium	7440-09-7	1	24	4,107	1.26E-01	1.22E-04	Y	Health	SL-JSL	B2	
Rubidium	7440-17-7	1.25	24	4,107	1.45E-04	1.52E-04	N	Health	SL-JSL	B2	
Selenium	7782-49-2	10	24	4,107	1.11E-04	1.22E-03	N	Health	Guideline	B1	
Silica - respirable (<10 µm diameter), quartz	14808-60-7	5	24	4,107	1.51E-01	6.09E-04	Y	Health	Guideline	B1	
Silver	7440-22-4	1	24	4,107	5.35E-05	1.22E-04	N	Health	Standard	B1	
Sodium hydroxide	1310-73-2	10	24	4,107	1.07E-05	1.22E-03	N	Corrosion	Guideline	B1	
Sodium metabisulfite	7681-57-4	60	24	4,107	4.42E-03	7.30E-03	N	Health	SL-JSL	B2	
Strontium	7440-24-6	120	24	4,107	1.59E-03	1.46E-02	N	Particulate	Guideline	B1	
Sulphur dioxide	7446-09-5	690	1	10,000	5.48E+00	3.45E-02	Y	Health & Vegetation	Standard	B1	Effective until July 1, 2023 Note 2 URT - Note 4, Table 4

Contaminant	CAS	MECP POI Limit (µg/m^3)	Averaging Period (hours)	Dispersion Factor (µg/m^3 per g/s)	Emission Rate (g/s)	Emission Threshold (g/s)	Contaminant Significant	Limiting Effect	Source	Category	Notes
Sulphur dioxide	7446-09-5	275	24	4,107	4.95E+00	3.35E-02	Y	Health & Vegetation	Standard	B1	Effective until July 1, 2023 Note 2 URT - Note 4, Table 4
Suspended particulate matter	N/A-TSP	120	24	4,107	2.42E+01	1.46E-02	Y	Visibility	Standard	B1	
Tantalum	7440-25-7	25	24	4,107	6.53E-07	3.04E-03	N	Health	SL-JSL	B2	
Tellurium (except hydrogen telluride)	13494-80-9	10	24	4,107	1.83E-04	1.22E-03	N	Health	Standard	B1	
Thallium	7440-28-0	0.5	24	4,107	6.53E-05	6.09E-05	Y	Health	SL-JSL	B2	
Tin	7440-31-5	10	24	4,107	1.44E-04	1.22E-03	N	Health	Standard	B1	
Titanium	7440-32-6	120	24	4,107	2.74E-02	1.46E-02	Y	Particulate	Standard	B1	
Tungsten	7440-33-7	5	24	4,107	2.44E-04	6.09E-04	N	Health	SL-JSL	B2	
Uranium and Uranium Compounds - U in PM10	7440-61-1	0.03	8760	787	1.31E-04	1.91E-05	Y	Health	Standard	B1	Note 19, Table 2, 3 URT - Note 4, Table 4
Vanadium	7440-62-2	2	24	4,107	1.04E-03	2.43E-04	Y	Health	Standard	B1	
Yttrium	7440-65-5	5	24	4,107	7.12E-05	6.09E-04	N	Health	SL-JSL	B2	
Zinc	7440-66-6	120	24	4,107	1.67E-02	1.46E-02	Y	Particulate	Standard	B1	
Zirconium	7440-67-7	25	24	4,107	1.67E-02	3.04E-03	Y	Health	SL-JSL	B2	

Negligibility Screening Based on Emission Threshold: Contaminants without MECP POI Limits

Contaminant	CAS	Deminimus Limit (µg/m^3)	Averaging Period (hours)	Dispersion Factor (µg/m^3 per g/s)	Emission Rate (g/s)	Emission Threshold (g/s)	Contaminant Significant
Cesium	7440-46-2	0.1	24	4,107	4.77E-05	1.22E-05	Y
Copper sulphate	7758-99-8	0.1	24	4,107	6.00E-03	1.22E-05	Y
Gallium	7440-55-3	0.1	24	4,107	6.53E-05	1.22E-05	Y
Germanium	7440-56-4	0.1	24	4,107	1.31E-06	1.22E-05	N
Lanthanum	7439-91-0	0.1	24	4,107	3.01E-04	1.22E-05	Y
Lutetium	7439-94-3	0.1	24	4,107	1.31E-06	1.22E-05	N
Rhenium	7440-15-5	0.1	24	4,107	3.26E-05	1.22E-05	Y
Scandium	7440-20-2	0.1	24	4,107	1.18E-04	1.22E-05	Y
Sodium	7440-23-5	0.1	24	4,107	2.09E-02	1.22E-05	Y
Terbium	7440-27-9	0.1	24	4,107	2.61E-06	1.22E-05	N
Thorium	7440-29-1	0.1	24	4,107	1.31E-04	1.22E-05	Y
Ytterbium	7440-64-4	0.1	24	4,107	7.18E-06	1.22E-05	N

Note:
Contaminants with MECP POI Limits screened for significance using the "Emissions Threshold" analysis method as documented in section 7.1.2 of the MECP publication "Procedure for Preparing an Emission Summary and Dispersion Modeling Report" (PIBS # 3614e04.1, March 2018). Emission Thresholds for contaminants without MECP POI Limits are developed using de minimus POI concentrations (24-hour average basis) that are set out in Table B-2A: De minimus Concentrations for Contaminants Not Listed in the ministry ACB List that Can Be Considered Insignificant in a Specific Situation and Table B-2B: List of Contaminants Excluded from de minimus level of the ESDM Procedure Document. These de minimus concentrations are only applicable to contaminants that are not included in the ACB List.

If the facility released the contaminant in a non-negligible amount (i.e. contaminants in bold text), the contaminant was modelled and included in the SST and EST.
The closest stack to property line was used to determine the dispersion factor.
Closest stack to property line ~20 m

$$\textit{Emission Threshold} = \frac{0.5 \times \textit{MECP POI Limit } (ug/m^3)}{\textit{Dispersion Factor } (ug/m^3 \textit{ per g/s emission})}$$

Sample calculation
Schedule 3 standard fpr TSP is 120 ug/m^3 (24-hour average)
Urban Dispersion factor for "up to 20m" is 8700 ug/m^3 per g/s
Dispersion factor converted to 24-hour average =
10,000 x (1/24) $^{0.28}$ = 4,107.15 ug/m^3 per g/s
Emission threshold for TSP =
0.5 x (120/4107.15) = 0.015 g/s

Emission Summary and Dispersion Modelling Report
New Gold - Rainy River Mine
Source Summary Table - All Sources

			Stack Parameters							Emissions Data								
Source ID	Model ID	Source Description	Volumetric Flow Rate (Am^3/s)	Gas Exit Temperature (°C)	Inner Diameter (m)	Height above Grade (m)	Height above Roof (m)	X-Coordinate (m)	Y-Coordinate (m)	Contaminant	CAS RN	Facility-Wide Emission Rate (g/s)	Averaging Period (hrs)	Emission Rate Estimation Technique	Sample Calculation	Data Quality	% of Emissions	Details
E_OUTCRUSH	E_OUTCRUSH	Aggregate Pit Crushing	0.5	647.85	0.1	2	0	426912	5499525	Nitrogen oxides	10102-44-0	7.36E-01	1	EF	Eq. 1	AA, A, M	7.97%	
E_OUTCRUSH	E_OUTCRUSH	Aggregate Pit Crushing	0.5	647.85	0.1	2	0	426912	5499525	Nitrogen oxides	10102-44-0	7.36E-01	24	EF	Eq. 1	AA, A, M	18.12%	
MOBI_CRUSH	MOBI_CRUSH	Mobile Crusher	0.5	647.85	0.1	2	0	426912	5409574	Nitrogen oxides	10102-44-0	4.37E-01	24	EF	Eq. 1	AA, A, M	10.77%	
WPs	WPs	Watering Pumps	N/A	N/A	N/A	N/A	N/A	426727	5411179	Nitrogen oxides	10102-44-0	1.01E+00	1	EF	Eq. 1	AA, A, M	10.92%	
WPs	WPs	Watering Pumps	N/A	N/A	N/A	N/A	N/A	426727	5411179	Nitrogen oxides	10102-44-0	5.05E-01	24	EF	Eq. 1	AA, A, M	12.43%	
BLAST	BLAST	Blasting	N/A	N/A	N/A	N/A	N/A	425557	5410132	Nitrogen oxides	10102-44-0	3.52E+00	1	EF	Eq. 3-7	A	38.08%	
BLAST	BLAST	Blasting	N/A	N/A	N/A	N/A	N/A	425557	5410132	Sulphur dioxide	7446-09-5	5.50E-01	1	EF	Eq. 3-7	A	10.04%	
BLAST	BLAST	Blasting	N/A	N/A	N/A	N/A	N/A	425557	5410132	Carbon monoxide	630-08-0	1.87E+01	0.5	EF	Eq. 3-7	A	100.00%	
UNLOAD NPAG	UNLOAD NPAG	Ore - Haul Truck Unloading at NPAG Stockpile	N/A	N/A	N/A	N/A	N/A	423113	5409736	Suspended particulate matter	N/A-TSP	1.69E+00	24	EF	Eq. 9	A	6.99%	
UNLOAD OB	UNLOAD OB	Ore - Haul Truck Unloading at OB Stockpile	N/A	N/A	N/A	N/A	N/A	425279	5410021	Suspended particulate matter	N/A-TSP	1.69E+00	24	EF	Eq. 9	A	6.99%	
LEACH1	LEACH1	Leaching Tank 1	N/A	N/A	N/A	N/A	N/A	426520	5411070	Hydrogen cyanide	74-90-8	2.74E-02	24	EC	Eq. 11	A	11.99%	
LEACH2	LEACH2	Leaching Tank 2	N/A	N/A	N/A	N/A	N/A	426540	5411070	Hydrogen cyanide	74-90-8	2.74E-02	24	EC	Eq. 11	A	11.99%	
LEACH3	LEACH3	Leaching Tank 3	N/A	N/A	N/A	N/A	N/A	426561	5411070	Hydrogen cyanide	74-90-8	2.74E-02	24	EC	Eq. 11	A	11.99%	
LEACH4	LEACH4	Leaching Tank 4	N/A	N/A	N/A	N/A	N/A	426583	5411070	Hydrogen cyanide	74-90-8	2.74E-02	24	EC	Eq. 11	A	11.99%	
LEACH5	LEACH5	Leaching Tank 5	N/A	N/A	N/A	N/A	N/A	426582	5411089	Hydrogen cyanide	74-90-8	2.74E-02	24	EC	Eq. 11	A	11.99%	
LEACH6	LEACH6	Leaching Tank 6	N/A	N/A	N/A	N/A	N/A	426561	5411090	Hydrogen cyanide	74-90-8	2.74E-02	24	EC	Eq. 11	A	11.99%	
LEACH7	LEACH7	Leaching Tank 7	N/A	N/A	N/A	N/A	N/A	426540	5411090	Hydrogen cyanide	74-90-8	2.74E-02	24	EC	Eq. 11	A	11.99%	
LEACH8	LEACH8	Leaching Tank 8	N/A	N/A	N/A	N/A	N/A	426519	5411089	Hydrogen cyanide	74-90-8	2.74E-02	24	EC	Eq. 11	A	11.99%	
HCND1	HCND1	CN Destruction	0.5	20	0.18	39	0.3	426630	5411129	Sulphur dioxide	7446-09-5	2.46E+00	1	MB	Eq. 12	AA	44.98%	
HCND1	HCND1	CN Destruction	0.5	20	0.18	39	0.3	426630	5411129	Sulphur dioxide	7446-09-5	2.46E+00	24	MB	Eq. 12	AA	49.77%	
HCND2	HCND2	CN Destruction	0.5	20	0.18	39	0.3	426630	5411114	Sulphur dioxide	7446-09-5	2.46E+00	1	MB	Eq. 12	AA	44.98%	
HCND2	HCND2	CN Destruction	0.5	20	0.18	39	0.3	426630	5411114	Sulphur dioxide	7446-09-5	2.46E+00	24	MB	Eq. 12	AA	49.77%	
DC6	DC6	Copper Sulphate Dust Collector	1.18	20	0.35	39	0.3	426631	5411044	Copper sulphate	7758-99-8	6.00E-03	N/A	EF	Eq. 13	AA	100.00%	
SPACEHEAT1	SPACEHEAT1	Propane Heating - Plant Building	0.5	450	0.3	37.2	1	426639	5411038	Nitrogen oxides	10102-44-0	3.17E-01	24	EF	Eq. 14	M	7.80%	
PORT1	PORT1	Propane - Underground Mine Portal 1	255.8	16.85	4.5	1	N/A	426795	5410102	Nitrogen oxides	10102-44-0	6.98E-01	1	EF	Eq. 14	M	7.55%	
PORT1	PORT1	Propane - Underground Mine Portal 1	255.8	16.85	4.5	1	N/A	426795	5410102	Nitrogen oxides	10102-44-0	6.98E-01	24	EF	Eq. 14	M	17.18%	
PORT2	PORT2	Propane - Underground Mine Portal 2	255.8	16.85	4.5	1	N/A	426795	5410102	Nitrogen oxides	10102-44-0	6.98E-01	1	EF	Eq. 14	M	7.55%	
PORT2	PORT2	Propane - Underground Mine Portal 2	255.8	16.85	4.5	1	N/A	426795	5410102	Nitrogen oxides	10102-44-0	6.98E-01	24	EF	Eq. 14	M	17.18%	
INPIT_HR	INPIT_HR	Haul Road - Material from bottom of pit to split	N/A	N/A	N/A	N/A	N/A	426334	5409637	Suspended particulate matter	N/A-TSP	3.10E+00	24	EF	Eq. 15-17	AA	12.84%	Release Ht = 6 m;SigmaY = 0.93 m; SigmaX = 1.8 m; X Length = 4 m
INPIT_HR	INPIT_HR	Haul Road - Material from bottom of pit to split	N/A	N/A	N/A	N/A	N/A	426334	5409637	Silica (<10 µm diameter)	14808-60-7	6.16E-02	24	EF	Eq. 15-17	AA	40.91%	Release Ht = 6 m;SigmaY = 0.93 m; SigmaX = 1.8 m; X Length = 4 m
NPAG_HR	NPAG_HR	Haul Road - NPAG from pit split to storage	N/A	N/A	N/A	N/A	N/A	424701	5409942	Silica (<10 µm diameter)	14808-60-7	1.64E-02	24	EF	Eq. 15-17	AA	10.91%	Release Ht = 6 m;SigmaY = 0.93 m; SigmaX = 1.8 m; X Length = 4 m
LG&PAG_HR	LG&PAG_HR	Haul Road - Low grade ore & PAG out of pit to	N/A	N/A	N/A	N/A	N/A	426361	5409608	Silica (<10 µm diameter)	14808-60-7	1.61E-02	24	EF	Eq. 15-17	AA	10.71%	Release Ht = 6 m;SigmaY = 0.93 m; SigmaX = 1.8 m; X Length = 4 m
PAG_HR	PAG_HR	Haul Road - PAG from split to storage	N/A	N/A	N/A	N/A	N/A	427167	5409803	Silica (<10 µm diameter)	14808-60-7	1.61E-02	24	EF	Eq. 15-17	AA	10.71%	Release Ht = 6 m;SigmaY = 0.93 m; SigmaX = 1.8 m; X Length = 4 m
CONST_HR	CONST_HR	Haul Road - Construction Equipment	N/A	N/A	N/A	N/A	N/A	421009	5413369	Suspended particulate matter	N/A-TSP	1.22E+00	24	EF	Eq. 15-17	AA	5.06%	
CONST_HR	CONST_HR	Haul Road - Construction Equipment	N/A	N/A	N/A	N/A	N/A	421009	5413369	Silica (<10 µm diameter)	14808-60-7	2.29E-02	24	EF	Eq. 15-17	AA	15.19%	
EF5	EF5	Electrowinning	0.5	20	0.18	39	0.3	426656	5411065	Ammonia	7664-41-7	7.54E-02	24	EC	Eq. 21-25	M	99.30%	
WMRS	WMRS	Stockpile - Mix of OVB & NPAG	N/A	N/A	N/A	8.3	N/A	423113	5409736	Suspended particulate matter	N/A-TSP	1.92E+00	24	EF	Eq. 18	M	7.97%	
WMRS	WMRS	Stockpile - Mix of OVB & NPAG	N/A	N/A	N/A	8.3	N/A	423113	5409736	Aluminum	7429-90-5	9.13E-02	24	EF	Eq. 18	M	20.18%	
WMRS	WMRS	Stockpile - Mix of OVB & NPAG	N/A	N/A	N/A	8.3	N/A	423113	5409736	Arsenic and compounds	7440-38-2	1.83E-04	24	EF	Eq. 18	M	20.18%	
WMRS	WMRS	Stockpile - Mix of OVB & NPAG	N/A	N/A	N/A	8.3	N/A	423113	5409736	Barium - total water soluble	7440-39-3	4.22E-04	24	EF	Eq. 18	M	20.18%	
WMRS	WMRS	Stockpile - Mix of OVB & NPAG	N/A	N/A	N/A	8.3	N/A	423113	5409736	Beryllium and Beryllium Compounds	7440-41-7	2.64E-06	24	EF	Eq. 18	M	20.18%	
WMRS	WMRS	Stockpile - Mix of OVB & NPAG	N/A	N/A	N/A	8.3	N/A	423113	5409736	Calcium carbonate	471-34-1	6.81E-02	24	EF	Eq. 18	M	20.18%	
WMRS	WMRS	Stockpile - Mix of OVB & NPAG	N/A	N/A	N/A	8.3	N/A	423113	5409736	Cadmium and Cadmium Compounds	7440-43-9	2.37E-05	24	EF	Eq. 18	M	20.18%	
WMRS	WMRS	Stockpile - Mix of OVB & NPAG	N/A	N/A	N/A	8.3	N/A	423113	5409736	Cobalt	7440-48-4	5.80E-05	24	EF	Eq. 18	M	20.15%	
WMRS	WMRS	Stockpile - Mix of OVB & NPAG	N/A	N/A	N/A	8.3	N/A	423113	5409736	Chromium compounds (metallic, divalent and trivalent	7440-47-3	4.81E-04	24	EF	Eq. 18	M	20.17%	
WMRS	WMRS	Stockpile - Mix of OVB & NPAG	N/A	N/A	N/A	8.3	N/A	423113	5409736	Cesium	7440-46-2	9.62E-06	N/A	EF	Eq. 18	M	20.18%	
WMRS	WMRS	Stockpile - Mix of OVB & NPAG	N/A	N/A	N/A	8.3	N/A	423113	5409736	Iron (metallic)	7439-89-6	1.10E-01	24	EF	Eq. 18	M	20.18%	
WMRS	WMRS	Stockpile - Mix of OVB & NPAG	N/A	N/A	N/A	8.3	N/A	423113	5409736	Gallium	7440-55-3	1.32E-05	N/A	EF	Eq. 18	M	20.18%	
WMRS	WMRS	Stockpile - Mix of OVB & NPAG	N/A	N/A	N/A	8.3	N/A	423113	5409736	Potassium	7440-09-7	2.54E-02	24	EF	Eq. 18	M	20.18%	
WMRS	WMRS	Stockpile - Mix of OVB & NPAG	N/A	N/A	N/A	8.3	N/A	423113	5409736	Lanthanum	7439-91-0	6.07E-05	N/A	EF	Eq. 18	M	20.18%	
WMRS	WMRS	Stockpile - Mix of OVB & NPAG	N/A	N/A	N/A	8.3	N/A	423113	5409736	Magnesium	7439-95-4	3.74E-02	24	EF	Eq. 18	M	20.18%	
WMRS	WMRS	Stockpile - Mix of OVB & NPAG	N/A	N/A	N/A	8.3	N/A	423113	5409736	Manganese and manganese compounds	7439-96-5	2.12E-03	24	EF	Eq. 18	M	19.60%	
WMRS	WMRS	Stockpile - Mix of OVB & NPAG	N/A	N/A	N/A	8.3	N/A	423113	5409736	Sodium	7440-23-5	4.22E-03	N/A	EF	Eq. 18	M	20.18%	
WMRS	WMRS	Stockpile - Mix of OVB & NPAG	N/A	N/A	N/A	8.3	N/A	423113	5409736	Nickel and nickel compounds	7440-02-0	1.52E-04	8760	EF	Eq. 18	M	20.14%	
WMRS	WMRS	Stockpile - Mix of OVB & NPAG	N/A	N/A	N/A	8.3	N/A	423113	5409736	Phosphorus	7723-14-0	1.05E-03	24	EF	Eq. 18	M	20.18%	
WMRS	WMRS	Stockpile - Mix of OVB & NPAG	N/A	N/A	N/A	8.3	N/A	423113	5409736	Lead and Lead Compounds	7439-92-1	2.87E-04	24	EF	Eq. 18	M	20.18%	
WMRS	WMRS	Stockpile - Mix of OVB & NPAG	N/A	N/A	N/A	8.3	N/A	423113	5409736	Lead and Lead Compounds	7439-92-1	2.87E-04	720	EF	Eq. 18	M	20.18%	
WMRS	WMRS	Stockpile - Mix of OVB & NPAG	N/A	N/A	N/A	8.3	N/A	423113	5409736	Rhenium	7440-15-5	6.59E-06	N/A	EF	Eq. 18	M	20.18%	
WMRS	WMRS	Stockpile - Mix of OVB & NPAG	N/A	N/A	N/A	8.3	N/A	423113	5409736	Scandium	7440-20-2	2.37E-05	N/A	EF	Eq. 18	M	20.18%	
WMRS	WMRS	Stockpile - Mix of OVB & NPAG	N/A	N/A	N/A	8.3	N/A	423113	5409736	Thorium	7440-29-1	2.64E-05	N/A	EF	Eq. 18	M	20.18%	
WMRS	WMRS	Stockpile - Mix of OVB & NPAG	N/A	N/A	N/A	8.3	N/A	423113	5409736	Titanium	7440-32-6	5.53E-03	24	EF	Eq. 18	M	20.18%	
WMRS	WMRS	Stockpile - Mix of OVB & NPAG	N/A	N/A	N/A	8.3	N/A	423113	5409736	Thallium	7440-28-0	1.32E-05	24	EF	Eq. 18	M	20.18%	
WMRS	WMRS	Stockpile - Mix of OVB & NPAG	N/A	N/A	N/A	8.3	N/A	423113	5409736	Uranium and Uranium Compounds - U in PM10	7440-61-1	2.64E-05	8760	EF	Eq. 18	M	20.18%	
WMRS	WMRS	Stockpile - Mix of OVB & NPAG	N/A	N/A	N/A	8.3	N/A	423113	5409736	Vanadium	7440-62-2	2.11E-04	24	EF	Eq. 18	M	20.18%	
WMRS	WMRS	Stockpile - Mix of OVB & NPAG	N/A	N/A	N/A	8.3	N/A	423113	5409736	Zinc	7440-66-6	3.36E-03	24	EF	Eq. 18	M	20.18%	
WMRS	WMRS	Stockpile - Mix of OVB & NPAG	N/A	N/A	N/A	8.3	N/A	423113	5409736	Zirconium	7440-67-7	3.36E-03	24	EF	Eq. 18	M	20.18%	
OC1	OC1	Stockpile - NAG Quarry and Pad	N/A	N/A	N/A	6	N/A	428179	5410508	Aluminum	7429-90-5	3.57E-02	24	EF	Eq. 18	M	7.89%	
OC1	OC1	Stockpile - NAG Quarry and Pad	N/A	N/A	N/A	6	N/A	428179	5410508	Arsenic and compounds	7440-38-2	7.14E-05	24	EF	Eq. 18	M	7.89%	
OC1	OC1	Stockpile - NAG Quarry and Pad	N/A	N/A	N/A	6	N/A	428179	5410508	Barium - total water soluble	7440-39-3	1.65E-04	24	EF	Eq. 18	M	7.89%	

OC1	OC1	Stockpile - NAG Quarry and Pad	N/A	N/A	N/A	6	N/A	428179	5410508	Beryllium and Beryllium Compounds	7440-41-7	1.03E-06	24	EF	Eq. 18	M	7.89%	
OC1	OC1	Stockpile - NAG Quarry and Pad	N/A	N/A	N/A	6	N/A	428179	5410508	Calcium carbonate	471-34-1	2.66E-02	24	EF	Eq. 18	M	7.89%	
OC1	OC1	Stockpile - NAG Quarry and Pad	N/A	N/A	N/A	6	N/A	428179	5410508	Cadmium and Cadmium Compounds	7440-43-9	9.27E-06	24	EF	Eq. 18	M	7.89%	
OC1	OC1	Stockpile - NAG Quarry and Pad	N/A	N/A	N/A	6	N/A	428179	5410508	Cobalt	7440-48-4	2.27E-05	24	EF	Eq. 18	M	7.88%	
OC1	OC1	Stockpile - NAG Quarry and Pad	N/A	N/A	N/A	6	N/A	428179	5410508	Chromium compounds (metallic, divalent and trivalent	7440-47-3	1.88E-04	24	EF	Eq. 18	M	7.88%	
OC1	OC1	Stockpile - NAG Quarry and Pad	N/A	N/A	N/A	6	N/A	428179	5410508	Cesium	7440-46-2	3.76E-06	N/A	EF	Eq. 18	M	7.89%	
OC1	OC1	Stockpile - NAG Quarry and Pad	N/A	N/A	N/A	6	N/A	428179	5410508	Iron (metallic)	7439-89-6	4.29E-02	24	EF	Eq. 18	M	7.89%	
OC1	OC1	Stockpile - NAG Quarry and Pad	N/A	N/A	N/A	6	N/A	428179	5410508	Gallium	7440-55-3	5.15E-06	N/A	EF	Eq. 18	M	7.89%	
OC1	OC1	Stockpile - NAG Quarry and Pad	N/A	N/A	N/A	6	N/A	428179	5410508	Potassium	7440-09-7	9.94E-03	24	EF	Eq. 18	M	7.89%	
OC1	OC1	Stockpile - NAG Quarry and Pad	N/A	N/A	N/A	6	N/A	428179	5410508	Lanthanum	7439-91-0	2.37E-05	N/A	EF	Eq. 18	M	7.89%	
OC1	OC1	Stockpile - NAG Quarry and Pad	N/A	N/A	N/A	6	N/A	428179	5410508	Magnesium	7439-95-4	1.46E-02	24	EF	Eq. 18	M	7.89%	
OC1	OC1	Stockpile - NAG Quarry and Pad	N/A	N/A	N/A	6	N/A	428179	5410508	Manganese and manganese compounds	7439-96-5	8.29E-04	24	EF	Eq. 18	M	7.66%	
OC1	OC1	Stockpile - NAG Quarry and Pad	N/A	N/A	N/A	6	N/A	428179	5410508	Sodium	7440-23-5	1.65E-03	N/A	EF	Eq. 18	M	7.89%	
OC1	OC1	Stockpile - NAG Quarry and Pad	N/A	N/A	N/A	6	N/A	428179	5410508	Nickel and nickel compounds	7440-02-0	5.92E-05	8760	EF	Eq. 18	M	7.87%	
OC1	OC1	Stockpile - NAG Quarry and Pad	N/A	N/A	N/A	6	N/A	428179	5410508	Phosphorus	7723-14-0	4.12E-04	24	EF	Eq. 18	M	7.89%	
OC1	OC1	Stockpile - NAG Quarry and Pad	N/A	N/A	N/A	6	N/A	428179	5410508	Lead and Lead Compounds	7439-92-1	1.12E-04	24	EF	Eq. 18	M	7.89%	
OC1	OC1	Stockpile - NAG Quarry and Pad	N/A	N/A	N/A	6	N/A	428179	5410508	Lead and Lead Compounds	7439-92-1	1.12E-04	720	EF	Eq. 18	M	7.89%	
OC1	OC1	Stockpile - NAG Quarry and Pad	N/A	N/A	N/A	6	N/A	428179	5410508	Rhenium	7440-15-5	2.58E-06	N/A	EF	Eq. 18	M	7.89%	
OC1	OC1	Stockpile - NAG Quarry and Pad	N/A	N/A	N/A	6	N/A	428179	5410508	Scandium	7440-20-2	9.27E-06	N/A	EF	Eq. 18	M	7.89%	
OC1	OC1	Stockpile - NAG Quarry and Pad	N/A	N/A	N/A	6	N/A	428179	5410508	Thorium	7440-29-1	1.03E-05	N/A	EF	Eq. 18	M	7.89%	
OC1	OC1	Stockpile - NAG Quarry and Pad	N/A	N/A	N/A	6	N/A	428179	5410508	Titanium	7440-32-6	2.16E-03	24	EF	Eq. 18	M	7.89%	
OC1	OC1	Stockpile - NAG Quarry and Pad	N/A	N/A	N/A	6	N/A	428179	5410508	Thallium	7440-28-0	5.15E-06	24	EF	Eq. 18	M	7.89%	
OC1	OC1	Stockpile - NAG Quarry and Pad	N/A	N/A	N/A	6	N/A	428179	5410508	Uranium and Uranium Compounds - U in PM10	7440-61-1	1.03E-05	8760	EF	Eq. 18	M	7.89%	
OC1	OC1	Stockpile - NAG Quarry and Pad	N/A	N/A	N/A	6	N/A	428179	5410508	Vanadium	7440-62-2	8.23E-05	24	EF	Eq. 18	M	7.89%	
OC1	OC1	Stockpile - NAG Quarry and Pad	N/A	N/A	N/A	6	N/A	428179	5410508	Zinc	7440-66-6	1.31E-03	24	EF	Eq. 18	M	7.89%	
OC1	OC1	Stockpile - NAG Quarry and Pad	N/A	N/A	N/A	6	N/A	428179	5410508	Zirconium	7440-67-7	1.31E-03	24	EF	Eq. 18	M	7.89%	
LGO	LGO	Stockpile - OVB/HPAG w/ PAG Cap, then LG/MG	N/A	N/A	N/A	4	N/A	427210	5409428	Aluminum	7429-90-5	4.27E-02	24	EF	Eq. 18	M	9.44%	
LGO	LGO	Stockpile - OVB/HPAG w/ PAG Cap, then LG/MG	N/A	N/A	N/A	4	N/A	427210	5409428	Arsenic and compounds	7440-38-2	8.54E-05	24	EF	Eq. 18	M	9.44%	
LGO	LGO	Stockpile - OVB/HPAG w/ PAG Cap, then LG/MG	N/A	N/A	N/A	4	N/A	427210	5409428	Barium - total water soluble	7440-39-3	1.97E-04	24	EF	Eq. 18	M	9.44%	
LGO	LGO	Stockpile - OVB/HPAG w/ PAG Cap, then LG/MG	N/A	N/A	N/A	4	N/A	427210	5409428	Beryllium and Beryllium Compounds	7440-41-7	1.23E-06	24	EF	Eq. 18	M	9.44%	
LGO	LGO	Stockpile - OVB/HPAG w/ PAG Cap, then LG/MG	N/A	N/A	N/A	4	N/A	427210	5409428	Calcium carbonate	471-34-1	3.19E-02	24	EF	Eq. 18	M	9.44%	
LGO	LGO	Stockpile - OVB/HPAG w/ PAG Cap, then LG/MG	N/A	N/A	N/A	4	N/A	427210	5409428	Cadmium and Cadmium Compounds	7440-43-9	1.11E-05	24	EF	Eq. 18	M	9.44%	
LGO	LGO	Stockpile - OVB/HPAG w/ PAG Cap, then LG/MG	N/A	N/A	N/A	4	N/A	427210	5409428	Cobalt	7440-48-4	2.71E-05	24	EF	Eq. 18	M	9.42%	
LGO	LGO	Stockpile - OVB/HPAG w/ PAG Cap, then LG/MG	N/A	N/A	N/A	4	N/A	427210	5409428	Chromium compounds (metallic, divalent and trivalent	7440-47-3	2.25E-04	24	EF	Eq. 18	M	9.43%	
LGO	LGO	Stockpile - OVB/HPAG w/ PAG Cap, then LG/MG	N/A	N/A	N/A	4	N/A	427210	5409428	Cesium	7440-46-2	4.50E-06	N/A	EF	Eq. 18	M	9.44%	
LGO	LGO	Stockpile - OVB/HPAG w/ PAG Cap, then LG/MG	N/A	N/A	N/A	4	N/A	427210	5409428	Iron (metallic)	7439-89-6	5.13E-02	24	EF	Eq. 18	M	9.44%	
LGO	LGO	Stockpile - OVB/HPAG w/ PAG Cap, then LG/MG	N/A	N/A	N/A	4	N/A	427210	5409428	Gallium	7440-55-3	6.16E-06	N/A	EF	Eq. 18	M	9.44%	
LGO	LGO	Stockpile - OVB/HPAG w/ PAG Cap, then LG/MG	N/A	N/A	N/A	4	N/A	427210	5409428	Potassium	7440-09-7	1.19E-02	24	EF	Eq. 18	M	9.44%	
LGO	LGO	Stockpile - OVB/HPAG w/ PAG Cap, then LG/MG	N/A	N/A	N/A	4	N/A	427210	5409428	Lanthanum	7439-91-0	2.84E-05	N/A	EF	Eq. 18	M	9.44%	
LGO	LGO	Stockpile - OVB/HPAG w/ PAG Cap, then LG/MG	N/A	N/A	N/A	4	N/A	427210	5409428	Magnesium	7439-95-4	1.75E-02	24	EF	Eq. 18	M	9.44%	
LGO	LGO	Stockpile - OVB/HPAG w/ PAG Cap, then LG/MG	N/A	N/A	N/A	4	N/A	427210	5409428	Manganese and manganese compounds	7439-96-5	9.92E-04	24	EF	Eq. 18	M	9.17%	
LGO	LGO	Stockpile - OVB/HPAG w/ PAG Cap, then LG/MG	N/A	N/A	N/A	4	N/A	427210	5409428	Sodium	7440-23-5	1.97E-03	N/A	EF	Eq. 18	M	9.44%	
LGO	LGO	Stockpile - OVB/HPAG w/ PAG Cap, then LG/MG	N/A	N/A	N/A	4	N/A	427210	5409428	Nickel and nickel compounds	7440-02-0	7.09E-05	8760	EF	Eq. 18	M	9.42%	
LGO	LGO	Stockpile - OVB/HPAG w/ PAG Cap, then LG/MG	N/A	N/A	N/A	4	N/A	427210	5409428	Phosphorus	7723-14-0	4.93E-04	24	EF	Eq. 18	M	9.44%	
LGO	LGO	Stockpile - OVB/HPAG w/ PAG Cap, then LG/MG	N/A	N/A	N/A	4	N/A	427210	5409428	Lead and Lead Compounds	7439-92-1	1.34E-04	24	EF	Eq. 18	M	9.44%	
LGO	LGO	Stockpile - OVB/HPAG w/ PAG Cap, then LG/MG	N/A	N/A	N/A	4	N/A	427210	5409428	Lead and Lead Compounds	7439-92-1	1.34E-04	720	EF	Eq. 18	M	9.44%	
LGO	LGO	Stockpile - OVB/HPAG w/ PAG Cap, then LG/MG	N/A	N/A	N/A	4	N/A	427210	5409428	Rhenium	7440-15-5	3.08E-06	N/A	EF	Eq. 18	M	9.44%	
LGO	LGO	Stockpile - OVB/HPAG w/ PAG Cap, then LG/MG	N/A	N/A	N/A	4	N/A	427210	5409428	Scandium	7440-20-2	1.11E-05	N/A	EF	Eq. 18	M	9.44%	
LGO	LGO	Stockpile - OVB/HPAG w/ PAG Cap, then LG/MG	N/A	N/A	N/A	4	N/A	427210	5409428	Thorium	7440-29-1	1.23E-05	N/A	EF	Eq. 18	M	9.44%	
LGO	LGO	Stockpile - OVB/HPAG w/ PAG Cap, then LG/MG	N/A	N/A	N/A	4	N/A	427210	5409428	Titanium	7440-32-6	2.59E-03	24	EF	Eq. 18	M	9.44%	
LGO	LGO	Stockpile - OVB/HPAG w/ PAG Cap, then LG/MG	N/A	N/A	N/A	4	N/A	427210	5409428	Thallium	7440-28-0	6.16E-06	24	EF	Eq. 18	M	9.44%	
LGO	LGO	Stockpile - OVB/HPAG w/ PAG Cap, then LG/MG	N/A	N/A	N/A	4	N/A	427210	5409428	Uranium and Uranium Compounds - U in PM10	7440-61-1	1.23E-05	8760	EF	Eq. 18	M	9.44%	
LGO	LGO	Stockpile - OVB/HPAG w/ PAG Cap, then LG/MG	N/A	N/A	N/A	4	N/A	427210	5409428	Vanadium	7440-62-2	9.85E-05	24	EF	Eq. 18	M	9.44%	
LGO	LGO	Stockpile - OVB/HPAG w/ PAG Cap, then LG/MG	N/A	N/A	N/A	4	N/A	427210	5409428	Zinc	7440-66-6	1.57E-03	24	EF	Eq. 18	M	9.44%	
LGO	LGO	Stockpile - OVB/HPAG w/ PAG Cap, then LG/MG	N/A	N/A	N/A	4	N/A	427210	5409428	Zirconium	7440-67-7	1.57E-03	24	EF	Eq. 18	M	9.44%	
EMRS S	EMRS S	Stockpile - Mix of OVB & PAG, high OVB pct. (18 m avg.)	N/A	N/A	N/A	18	N/A	424350	5410746	Suspended particulate matter	N/A-TSP	1.51E+00	24	EF	Eq. 18	M	6.26%	
EMRS S	EMRS S	Stockpile - Mix of OVB & PAG, high OVB pct. (18 m avg.)	N/A	N/A	N/A	18	N/A	424350	5410746	Aluminum	7429-90-5	7.18E-02	24	EF	Eq. 18	M	15.86%	
EMRS S	EMRS S	Stockpile - Mix of OVB & PAG, high OVB pct. (18 m avg.)	N/A	N/A	N/A	18	N/A	424350	5410746	Arsenic and compounds	7440-38-2	1.44E-04	24	EF	Eq. 18	M	15.86%	
EMRS S	EMRS S	Stockpile - Mix of OVB & PAG, high OVB pct. (18 m avg.)	N/A	N/A	N/A	18	N/A	424350	5410746	Barium - total water soluble	7440-39-3	3.31E-04	24	EF	Eq. 18	M	15.86%	
EMRS S	EMRS S	Stockpile - Mix of OVB & PAG, high OVB pct. (18 m avg.)	N/A	N/A	N/A	18	N/A	424350	5410746	Beryllium and Beryllium Compounds	7440-41-7	2.07E-06	24	EF	Eq. 18	M	15.86%	
EMRS S	EMRS S	Stockpile - Mix of OVB & PAG, high OVB pct. (18 m avg.)	N/A	N/A	N/A	18	N/A	424350	5410746	Calcium carbonate	471-34-1	5.35E-02	24	EF	Eq. 18	M	15.86%	
EMRS S	EMRS S	Stockpile - Mix of OVB & PAG, high OVB pct. (18 m avg.)	N/A	N/A	N/A	18	N/A	424350	5410746	Cadmium and Cadmium Compounds	7440-43-9	1.86E-05	24	EF	Eq. 18	M	15.86%	
EMRS S	EMRS S	Stockpile - Mix of OVB & PAG, high OVB pct. (18 m avg.)	N/A	N/A	N/A	18	N/A	424350	5410746	Cobalt	7440-48-4	4.56E-05	24	EF	Eq. 18	M	15.84%	
EMRS S	EMRS S	Stockpile - Mix of OVB & PAG, high OVB pct. (18 m avg.)	N/A	N/A	N/A	18	N/A	424350	5410746	Chromium compounds (metallic, divalent and trivalent	7440-47-3	3.78E-04	24	EF	Eq. 18	M	15.85%	

EMRS S	EMRS S	Stockpile - Mix of OVB & PAG, high OVB pct. (18 m avg.)	N/A	N/A	N/A	18	N/A	424350	5410746	Cesium	7440-46-2	7.56E-06	N/A	EF	Eq. 18	M	15.86%	
EMRS S	EMRS S	Stockpile - Mix of OVB & PAG, high OVB pct. (18 m avg.)	N/A	N/A	N/A	18	N/A	424350	5410746	Iron (metallic)	7439-89-6	8.63E-02	24	EF	Eq. 18	M	15.86%	
EMRS S	EMRS S	Stockpile - Mix of OVB & PAG, high OVB pct. (18 m avg.)	N/A	N/A	N/A	18	N/A	424350	5410746	Gallium	7440-55-3	1.04E-05	N/A	EF	Eq. 18	M	15.86%	
EMRS S	EMRS S	Stockpile - Mix of OVB & PAG, high OVB pct. (18 m avg.)	N/A	N/A	N/A	18	N/A	424350	5410746	Potassium	7440-09-7	2.00E-02	24	EF	Eq. 18	M	15.86%	
EMRS S	EMRS S	Stockpile - Mix of OVB & PAG, high OVB pct. (18 m avg.)	N/A	N/A	N/A	18	N/A	424350	5410746	Lanthanum	7439-91-0	4.77E-05	N/A	EF	Eq. 18	M	15.86%	
EMRS S	EMRS S	Stockpile - Mix of OVB & PAG, high OVB pct. (18 m avg.)	N/A	N/A	N/A	18	N/A	424350	5410746	Magnesium	7439-95-4	2.94E-02	24	EF	Eq. 18	M	15.86%	
EMRS S	EMRS S	Stockpile - Mix of OVB & PAG, high OVB pct. (18 m avg.)	N/A	N/A	N/A	18	N/A	424350	5410746	Manganese and manganese compounds	7439-96-5	1.67E-03	24	EF	Eq. 18	M	15.41%	
EMRS S	EMRS S	Stockpile - Mix of OVB & PAG, high OVB pct. (18 m avg.)	N/A	N/A	N/A	18	N/A	424350	5410746	Sodium	7440-23-5	3.31E-03	N/A	EF	Eq. 18	M	15.86%	
EMRS S	EMRS S	Stockpile - Mix of OVB & PAG, high OVB pct. (18 m avg.)	N/A	N/A	N/A	18	N/A	424350	5410746	Nickel and nickel compounds	7440-02-0	1.19E-04	8760	EF	Eq. 18	M	15.83%	
EMRS S	EMRS S	Stockpile - Mix of OVB & PAG, high OVB pct. (18 m avg.)	N/A	N/A	N/A	18	N/A	424350	5410746	Phosphorus	7723-14-0	8.29E-04	24	EF	Eq. 18	M	15.86%	
EMRS S	EMRS S	Stockpile - Mix of OVB & PAG, high OVB pct. (18 m avg.)	N/A	N/A	N/A	18	N/A	424350	5410746	Lead and Lead Compounds	7439-92-1	2.25E-04	24	EF	Eq. 18	M	15.86%	
EMRS S	EMRS S	Stockpile - Mix of OVB & PAG, high OVB pct. (18 m avg.)	N/A	N/A	N/A	18	N/A	424350	5410746	Lead and Lead Compounds	7439-92-1	2.25E-04	720	EF	Eq. 18	M	15.86%	
EMRS S	EMRS S	Stockpile - Mix of OVB & PAG, high OVB pct. (18 m avg.)	N/A	N/A	N/A	18	N/A	424350	5410746	Rhenium	7440-15-5	5.18E-06	N/A	EF	Eq. 18	M	15.86%	
EMRS S	EMRS S	Stockpile - Mix of OVB & PAG, high OVB pct. (18 m avg.)	N/A	N/A	N/A	18	N/A	424350	5410746	Scandium	7440-20-2	1.86E-05	N/A	EF	Eq. 18	M	15.86%	
EMRS S	EMRS S	Stockpile - Mix of OVB & PAG, high OVB pct. (18 m avg.)	N/A	N/A	N/A	18	N/A	424350	5410746	Thorium	7440-29-1	2.07E-05	N/A	EF	Eq. 18	M	15.86%	
EMRS S	EMRS S	Stockpile - Mix of OVB & PAG, high OVB pct. (18 m avg.)	N/A	N/A	N/A	18	N/A	424350	5410746	Titanium	7440-32-6	4.35E-03	24	EF	Eq. 18	M	15.86%	
EMRS S	EMRS S	Stockpile - Mix of OVB & PAG, high OVB pct. (18 m avg.)	N/A	N/A	N/A	18	N/A	424350	5410746	Thallium	7440-28-0	1.04E-05	24	EF	Eq. 18	M	15.86%	
EMRS S	EMRS S	Stockpile - Mix of OVB & PAG, high OVB pct. (18 m avg.)	N/A	N/A	N/A	18	N/A	424350	5410746	Uranium and Uranium Compounds - U in PM10	7440-61-1	2.07E-05	8760	EF	Eq. 18	M	15.86%	
EMRS S	EMRS S	Stockpile - Mix of OVB & PAG, high OVB pct. (18 m avg.)	N/A	N/A	N/A	18	N/A	424350	5410746	Vanadium	7440-62-2	1.66E-04	24	EF	Eq. 18	M	15.86%	
EMRS S	EMRS S	Stockpile - Mix of OVB & PAG, high OVB pct. (18 m avg.)	N/A	N/A	N/A	18	N/A	424350	5410746	Zinc	7440-66-6	2.64E-03	24	EF	Eq. 18	M	15.86%	
EMRS S	EMRS S	Stockpile - Mix of OVB & PAG, high OVB pct. (18 m avg.)	N/A	N/A	N/A	18	N/A	424350	5410746	Zirconium	7440-67-7	2.64E-03	24	EF	Eq. 18	M	15.86%	
TMA	TMA	Stockpile - Tailings	N/A	N/A	N/A	1.6	N/A	420565	5412900	Aluminum	7429-90-5	3.29E-02	24	EF	Eq. 18	M	7.28%	
TMA	TMA	Stockpile - Tailings	N/A	N/A	N/A	1.6	N/A	420565	5412900	Arsenic and compounds	7440-38-2	6.58E-05	24	EF	Eq. 18	M	7.28%	
TMA	TMA	Stockpile - Tailings	N/A	N/A	N/A	1.6	N/A	420565	5412900	Barium - total water soluble	7440-39-3	1.52E-04	24	EF	Eq. 18	M	7.28%	
TMA	TMA	Stockpile - Tailings	N/A	N/A	N/A	1.6	N/A	420565	5412900	Beryllium and Beryllium Compounds	7440-41-7	9.50E-07	24	EF	Eq. 18	M	7.28%	
TMA	TMA	Stockpile - Tailings	N/A	N/A	N/A	1.6	N/A	420565	5412900	Calcium carbonate	471-34-1	2.46E-02	24	EF	Eq. 18	M	7.28%	
TMA	TMA	Stockpile - Tailings	N/A	N/A	N/A	1.6	N/A	420565	5412900	Cadmium and Cadmium Compounds	7440-43-9	8.55E-06	24	EF	Eq. 18	M	7.28%	
TMA	TMA	Stockpile - Tailings	N/A	N/A	N/A	1.6	N/A	420565	5412900	Cobalt	7440-48-4	2.09E-05	24	EF	Eq. 18	M	7.27%	
TMA	TMA	Stockpile - Tailings	N/A	N/A	N/A	1.6	N/A	420565	5412900	Chromium compounds (metallic, divalent and trivalent	7440-47-3	1.73E-04	24	EF	Eq. 18	M	7.27%	
TMA	TMA	Stockpile - Tailings	N/A	N/A	N/A	1.6	N/A	420565	5412900	Cesium	7440-46-2	3.47E-06	N/A	EF	Eq. 18	M	7.28%	
TMA	TMA	Stockpile - Tailings	N/A	N/A	N/A	1.6	N/A	420565	5412900	Iron (metallic)	7439-89-6	3.96E-02	24	EF	Eq. 18	M	7.28%	
TMA	TMA	Stockpile - Tailings	N/A	N/A	N/A	1.6	N/A	420565	5412900	Gallium	7440-55-3	4.75E-06	N/A	EF	Eq. 18	M	7.28%	
TMA	TMA	Stockpile - Tailings	N/A	N/A	N/A	1.6	N/A	420565	5412900	Potassium	7440-09-7	9.17E-03	24	EF	Eq. 18	M	7.28%	
TMA	TMA	Stockpile - Tailings	N/A	N/A	N/A	1.6	N/A	420565	5412900	Lanthanum	7439-91-0	2.19E-05	N/A	EF	Eq. 18	M	7.28%	
TMA	TMA	Stockpile - Tailings	N/A	N/A	N/A	1.6	N/A	420565	5412900	Magnesium	7439-95-4	1.35E-02	24	EF	Eq. 18	M	7.28%	
TMA	TMA	Stockpile - Tailings	N/A	N/A	N/A	1.6	N/A	420565	5412900	Manganese and manganese compounds	7439-96-5	7.65E-04	24	EF	Eq. 18	M	7.07%	
TMA	TMA	Stockpile - Tailings	N/A	N/A	N/A	1.6	N/A	420565	5412900	Sodium	7440-23-5	1.52E-03	N/A	EF	Eq. 18	M	7.28%	
TMA	TMA	Stockpile - Tailings	N/A	N/A	N/A	1.6	N/A	420565	5412900	Nickel and nickel compounds	7440-02-0	5.46E-05	8760	EF	Eq. 18	M	7.26%	
TMA	TMA	Stockpile - Tailings	N/A	N/A	N/A	1.6	N/A	420565	5412900	Phosphorus	7723-14-0	3.80E-04	24	EF	Eq. 18	M	7.28%	
TMA	TMA	Stockpile - Tailings	N/A	N/A	N/A	1.6	N/A	420565	5412900	Lead and Lead Compounds	7439-92-1	1.03E-04	24	EF	Eq. 18	M	7.28%	
TMA	TMA	Stockpile - Tailings	N/A	N/A	N/A	1.6	N/A	420565	5412900	Lead and Lead Compounds	7439-92-1	1.03E-04	720	EF	Eq. 18	M	7.28%	
TMA	TMA	Stockpile - Tailings	N/A	N/A	N/A	1.6	N/A	420565	5412900	Rhenium	7440-15-5	2.38E-06	N/A	EF	Eq. 18	M	7.28%	
TMA	TMA	Stockpile - Tailings	N/A	N/A	N/A	1.6	N/A	420565	5412900	Scandium	7440-20-2	8.55E-06	N/A	EF	Eq. 18	M	7.28%	
TMA	TMA	Stockpile - Tailings	N/A	N/A	N/A	1.6	N/A	420565	5412900	Thorium	7440-29-1	9.50E-06	N/A	EF	Eq. 18	M	7.28%	
TMA	TMA	Stockpile - Tailings	N/A	N/A	N/A	1.6	N/A	420565	5412900	Titanium	7440-32-6	2.00E-03	24	EF	Eq. 18	M	7.28%	
TMA	TMA	Stockpile - Tailings	N/A	N/A	N/A	1.6	N/A	420565	5412900	Thallium	7440-28-0	4.75E-06	24	EF	Eq. 18	M	7.28%	
TMA	TMA	Stockpile - Tailings	N/A	N/A	N/A	1.6	N/A	420565	5412900	Uranium and Uranium Compounds - U in PM10	7440-61-1	9.50E-06	8760	EF	Eq. 18	M	7.28%	
TMA	TMA	Stockpile - Tailings	N/A	N/A	N/A	1.6	N/A	420565	5412900	Vanadium	7440-62-2	7.60E-05	24	EF	Eq. 18	M	7.28%	
TMA	TMA	Stockpile - Tailings	N/A	N/A	N/A	1.6	N/A	420565	5412900	Zinc	7440-66-6	1.21E-03	24	EF	Eq. 18	M	7.28%	
TMA	TMA	Stockpile - Tailings	N/A	N/A	N/A	1.6	N/A	420565	5412900	Zirconium	7440-67-7	1.21E-03	24	EF	Eq. 18	M	7.28%	
PIT	PIT	Stockpile - Mix of OVB & NPAG	N/A	N/A	N/A	2	N/A	425279	5410021	Suspended particulate matter	N/A-TSP	2.34E+00	24	EF	Eq. 18	M	9.68%	
PIT	PIT	Stockpile - Mix of OVB & NPAG	N/A	N/A	N/A	2	N/A	425279	5410021	Aluminum	7429-90-5	1.11E-01	24	EF	Eq. 18	M	24.52%	
PIT	PIT	Stockpile - Mix of OVB & NPAG	N/A	N/A	N/A	2	N/A	425279	5410021	Arsenic and compounds	7440-38-2	2.22E-04	24	EF	Eq. 18	M	24.52%	
PIT	PIT	Stockpile - Mix of OVB & NPAG	N/A	N/A	N/A	2	N/A	425279	5410021	Barium - total water soluble	7440-39-3	5.12E-04	24	EF	Eq. 18	M	24.52%	
PIT	PIT	Stockpile - Mix of OVB & NPAG	N/A	N/A	N/A	2	N/A	425279	5410021	Beryllium and Beryllium Compounds	7440-41-7	3.20E-06	24	EF	Eq. 18	M	24.52%	
PIT	PIT	Stockpile - Mix of OVB & NPAG	N/A	N/A	N/A	2	N/A	425279	5410021	Calcium carbonate	471-34-1	8.28E-02	24	EF	Eq. 18	M	24.52%	

PIT	PIT	Stockpile - Mix of OVB & NPAG	N/A	N/A	N/A	2	N/A	425279	5410021	Cadmium and Cadmium Compounds	7440-43-9	2.88E-05	24	EF	Eq. 18	M	24.52%	
PIT	PIT	Stockpile - Mix of OVB & NPAG	N/A	N/A	N/A	2	N/A	425279	5410021	Cobalt	7440-48-4	7.04E-05	24	EF	Eq. 18	M	24.48%	
PIT	PIT	Stockpile - Mix of OVB & NPAG	N/A	N/A	N/A	2	N/A	425279	5410021	Chromium compounds (metallic, divalent and trivalent	7440-47-3	5.84E-04	24	EF	Eq. 18	M	24.50%	
PIT	PIT	Stockpile - Mix of OVB & NPAG	N/A	N/A	N/A	2	N/A	425279	5410021	Cesium	7440-46-2	1.17E-05	N/A	EF	Eq. 18	M	24.52%	
PIT	PIT	Stockpile - Mix of OVB & NPAG	N/A	N/A	N/A	2	N/A	425279	5410021	Iron (metallic)	7439-89-6	1.33E-01	24	EF	Eq. 18	M	24.52%	
PIT	PIT	Stockpile - Mix of OVB & NPAG	N/A	N/A	N/A	2	N/A	425279	5410021	Gallium	7440-55-3	1.60E-05	N/A	EF	Eq. 18	M	24.52%	
PIT	PIT	Stockpile - Mix of OVB & NPAG	N/A	N/A	N/A	2	N/A	425279	5410021	Potassium	7440-09-7	3.09E-02	24	EF	Eq. 18	M	24.52%	
PIT	PIT	Stockpile - Mix of OVB & NPAG	N/A	N/A	N/A	2	N/A	425279	5410021	Lanthanum	7439-91-0	7.38E-05	N/A	EF	Eq. 18	M	24.52%	
PIT	PIT	Stockpile - Mix of OVB & NPAG	N/A	N/A	N/A	2	N/A	425279	5410021	Magnesium	7439-95-4	4.55E-02	24	EF	Eq. 18	M	24.52%	
PIT	PIT	Stockpile - Mix of OVB & NPAG	N/A	N/A	N/A	2	N/A	425279	5410021	Manganese and manganese compounds	7439-96-5	2.58E-03	24	EF	Eq. 18	M	23.81%	
PIT	PIT	Stockpile - Mix of OVB & NPAG	N/A	N/A	N/A	2	N/A	425279	5410021	Sodium	7440-23-5	5.12E-03	N/A	EF	Eq. 18	M	24.52%	
PIT	PIT	Stockpile - Mix of OVB & NPAG	N/A	N/A	N/A	2	N/A	425279	5410021	Nickel and nickel compounds	7440-02-0	1.84E-04	8760	EF	Eq. 18	M	24.47%	
PIT	PIT	Stockpile - Mix of OVB & NPAG	N/A	N/A	N/A	2	N/A	425279	5410021	Phosphorus	7723-14-0	1.28E-03	24	EF	Eq. 18	M	24.52%	
PIT	PIT	Stockpile - Mix of OVB & NPAG	N/A	N/A	N/A	2	N/A	425279	5410021	Lead and Lead Compounds	7439-92-1	3.48E-04	24	EF	Eq. 18	M	24.52%	
PIT	PIT	Stockpile - Mix of OVB & NPAG	N/A	N/A	N/A	2	N/A	425279	5410021	Lead and Lead Compounds	7439-92-1	3.48E-04	720	EF	Eq. 18	M	24.52%	
PIT	PIT	Stockpile - Mix of OVB & NPAG	N/A	N/A	N/A	2	N/A	425279	5410021	Rhenium	7440-15-5	8.00E-06	N/A	EF	Eq. 18	M	24.52%	
PIT	PIT	Stockpile - Mix of OVB & NPAG	N/A	N/A	N/A	2	N/A	425279	5410021	Scandium	7440-20-2	2.88E-05	N/A	EF	Eq. 18	M	24.52%	
PIT	PIT	Stockpile - Mix of OVB & NPAG	N/A	N/A	N/A	2	N/A	425279	5410021	Thorium	7440-29-1	3.20E-05	N/A	EF	Eq. 18	M	24.52%	
PIT	PIT	Stockpile - Mix of OVB & NPAG	N/A	N/A	N/A	2	N/A	425279	5410021	Titanium	7440-32-6	6.72E-03	24	EF	Eq. 18	M	24.52%	
PIT	PIT	Stockpile - Mix of OVB & NPAG	N/A	N/A	N/A	2	N/A	425279	5410021	Thallium	7440-28-0	1.60E-05	24	EF	Eq. 18	M	24.52%	
PIT	PIT	Stockpile - Mix of OVB & NPAG	N/A	N/A	N/A	2	N/A	425279	5410021	Uranium and Uranium Compounds - U in PM10	7440-61-1	3.20E-05	8760	EF	Eq. 18	M	24.52%	
PIT	PIT	Stockpile - Mix of OVB & NPAG	N/A	N/A	N/A	2	N/A	425279	5410021	Vanadium	7440-62-2	2.56E-04	24	EF	Eq. 18	M	24.52%	
PIT	PIT	Stockpile - Mix of OVB & NPAG	N/A	N/A	N/A	2	N/A	425279	5410021	Zinc	7440-66-6	4.08E-03	24	EF	Eq. 18	M	24.52%	
PIT	PIT	Stockpile - Mix of OVB & NPAG	N/A	N/A	N/A	2	N/A	425279	5410021	Zirconium	7440-67-7	4.08E-03	24	EF	Eq. 18	M	24.52%	

Notes:

EF	Emission Factor
MB	Mass Balance
EC	Engineering Calculation
H	Highest Quality
AA	Above Average
A	Average
M	Marginal/Uncertain

Emission Summary and Dispersion Modelling Report
New Gold - Rainy River Mine
Emission Summary Table

Contaminant Name	CAS RN	Total Facility Emission Rate (g/s)	Air Dispersion Model Used	Maximum POI Concentration (µg/m^3)	Averaging Period (hours)	Ministry POI Limit (µg/m^3)	Limiting Effect	Regulation Source	Percentage of Ministry POI Limit
Aluminum	7429-90-5	3.85E-01	AERMOD	2.19E+00	24	12	Health	SL-JSL	18.3%
Ammonia	7664-41-7	7.54E-02	AERMOD	1.41E-01	24	100	Health	Standard	0.1%
Arsenic and compounds	7440-38-2	7.71E-04	AERMOD	4.38E-03	24	0.3	Health	Guideline	1.5%
Barium - total water soluble	7440-39-3	1.78E-03	AERMOD	1.01E-02	24	10	Health	Guideline	0.1%
Beryllium and Beryllium Compounds	7440-41-7	1.11E-05	AERMOD	6.33E-05	24	0.01	Health	Standard	0.6%
Cadmium and Cadmium Compounds	7440-43-9	1.00E-04	AERMOD	5.69E-04	24	0.025	Health	Standard	2.3%
Calcium carbonate	471-34-1	2.87E-01	AERMOD v.19191	1.64E+00	24	15	Health & Particulate	SL-JSL	10.9%
Carbon monoxide	630-08-0	1.87E+01	AERMOD	1.27E+03	0.5	6000	Health	Standard	21.2%
Cesium	7440-46-2	4.06E-05	AERMOD	2.31E-04	N/A				
Chromium compounds (metallic, divalent and trivalent forms)	7440-47-3	2.03E-03	AERMOD v.19191	1.15E-02	24	0.5	Health	Standard	2.3%
Cobalt	7440-48-4	2.45E-04	AERMOD	1.39E-03	24	0.1	Health	Guideline	1.4%
Copper sulphate	7758-99-8	6.00E-03	AERMOD	1.08E-02	N/A				
Gallium	7440-55-3	5.56E-05	AERMOD	3.16E-04	N/A				
Hydrogen cyanide	74-90-8	2.20E-01	AERMOD	7.88E-01	24	8	Health	Standard	9.9%
Iron (metallic)	7439-89-6	4.63E-01	AERMOD	2.63E+00	24	4	Health	Standard	65.9%
Lanthanum	7439-91-0	2.56E-04	AERMOD	1.46E-03	N/A				
Lead and Lead Compounds	7439-92-1	1.21E-03	AERMOD	6.88E-03	24	0.5	Health	Standard	1.4%
Lead and Lead Compounds	7439-92-1	1.21E-03	AERMOD	1.33E-03	720	0.2	Health	Standard	0.7%
Magnesium	7439-95-4	1.58E-01	AERMOD	8.98E-01	24	72	Health	SL-MD	1.2%
Manganese and manganese compounds	7439-96-5	8.95E-03	AERMOD	5.09E-02	24	0.4	Health	Standard	12.7%
Nickel and nickel compounds	7440-02-0	6.39E-04	AERMOD	2.26E-04	8760	0.04	Health	Standard	0.6%
Nitrogen oxides	10102-44-0	6.66E+00	AERMOD	3.61E+02	1	400	Health	Standard	90.1%
Nitrogen oxides	10102-44-0	3.39E+00	AERMOD	1.15E+01	24	200	Health	Standard	5.8%
Phosphorus	7723-14-0	4.45E-03	AERMOD	2.53E-02	24	0.5	Health	SL-MD	5.1%
Potassium	7440-09-7	1.07E-01	AERMOD	6.10E-01	24	1	Health	SL-JSL	61.0%
Rhenium	7440-15-5	2.78E-05	AERMOD	1.58E-04	N/A				
Scandium	7440-20-2	1.00E-04	AERMOD	5.69E-04	N/A				
Silica (<10 µm diameter)	14808-60-7	1.33E-01	AERMOD	5.62E-01	24	5	Health	Guideline	11.2%
Sodium	7440-23-5	1.78E-02	AERMOD	1.01E-01	N/A				
Sulphur dioxide	7446-09-5	5.48E+00	AERMOD v.19191	2.23E+02	1	609	Health & Vegetation	Standard	36.6%
Sulphur dioxide	7446-09-5	4.93E+00	AERMOD v.19191	1.77E+01	24	275	Health & Vegetation	Standard	6.4%
Suspended particulate matter	N/A-TSP	1.35E+01	AERMOD	7.93E+01	24	120	Visibility	Standard	66.1%
Thallium	7440-28-0	5.56E-05	AERMOD	3.16E-04	24	0.5	Health	SL-JSL	0.1%
Thorium	7440-29-1	1.11E-04	AERMOD	6.33E-04	N/A				
Titanium	7440-32-6	2.34E-02	AERMOD	1.33E-01	24	120	Particulate	Standard	0.1%
Uranium and Uranium Compounds - U in PM10	7440-61-1	1.11E-04	AERMOD v.19191	3.94E-05	8760	0.03	Health	Standard	0.1%
Vanadium	7440-62-2	8.89E-04	AERMOD	5.06E-03	24	2	Health	Standard	0.3%
Zinc	7440-66-6	1.42E-02	AERMOD	8.07E-02	24	120	Particulate	Standard	0.1%
Zirconium	7440-67-7	1.42E-02	AERMOD	8.07E-02	24	25	Health	SL-JSL	0.3%

Emission Summary and Dispersion Modelling Report
New Gold - Rainy River Mine
Modelling Assessment Values

This table lists assessment values for contaminants with annual air standards to use with modelling. See the MOECC Technical Bulletin for guidance.
Technical bulletin: Using assessment values for contaminants with annual air standards

Contaminant	CASRN	POI Modelled Concentration ($\mu g/m^3$)	Annual Standard ($\mu g/m^3$)	Percentage of Annual Standard %	Annual Assessment Value (AAV) ($\mu g/m^3$)	Percentage of AAV Concentration %	24-Hour POI Modelled Concentration (µg/m3)	URT* / Daily Assessment Value (DAV) ($\mu g/m^3$)	Percentage of DAV/URT Concentration %
Nickel and Nickel Compounds	7440-02-0	2.23E-04	0.04	0.6%	0.4	0.06%	3.59E-03	2	0.18%
Uranium and Uranium compounds	7440-61-1	3.89E-05	0.03	0.1%	0.15	0.03%	6.25E-04	1.5	0.04%

*URT = Upper Risk Threshold

Emission Summary and Dispersion Modelling Report
New Gold - Rainy River Mine
Monitoring Assessment Values

This table lists examples of assessment values for contaminants with annual air standards to use with monitoring. See the MOECC Technical Bulletin for guidance.
Technical bulletin: Using assessment values for contaminants with annual air standards
It should be noted that assessment values for monitoring are calculated by using the conversion-factor set out in subsection 17(3) of O. Reg. 419/05.
These values for monitoring could be based on any averaging period as the monitoring data available dictates the assessment value applied.

Contaminant	CAS RN	24-Hour POI Concentration ($\mu g/m^3$)	24-Hour Averaging Time ($\mu g/m^3$)	Percentage of 24-Hour Assessment Concentration %	1-Hour POI Concentration (µg/m3)	1-Hour Averaging Time ($\mu g/m^3$)	Percentage of 1-Hour Assessment Concentration %
Nickel and Nickel Compounds	7440-02-	3.59E-03	0.2	1.8%	2.28E-02	0.5	4.6%
Uranium and Uranium compounds	7440-61-	6.25E-04	0.15	0.4%	3.96E-03	0.375	1.1%

Emission Summary and Dispersion Modelling Report
New Gold - Rainy River Mine
Table 4: Schedule 6 Upper Risk Threshold (URT)

This table lists the URTs as set out in Schedule 6 of O. Reg. 419/05.

Contaminant	CASRN	24hr URT (µg/m^3) unless otherwise	POI Modelled Concentration	Percentage of URT Concentration %
Ammonia	7664-41-7	1,000	1.41E-01	0.01%
Cadmium (and Cadmium Compounds)	7440-43-9	0.25	5.62E-04	0.22%
Chromium compounds (metallic, divalent and trivalent forms)	7440-47-3	5	1.14E-02	0.23%
Hydrogen chloride	7647-01-0	200	0.00E+00	0.00%
Hydrogen cyanide	74-90-8	80	7.88E-01	0.99%
Lead (and Lead compounds)	7439-92-1	2	1.36E-02	0.68%
Manganese and Manganese compounds	7439-96-5	4	5.03E-02	1.26%
Nickel and Nickel Compounds	7440-02-0	2	3.59E-03	0.18%
Sulphur dioxide (Effective date January 1, 2019)	7446-09-5	690	3.86E+01	5.59%
Uranium and uranium compounds	7440-61-1	2	6.25E-04	0.04%

Emission Summary and Dispersion Modelling Report
New Gold - Rainy River Mine
Contaminant Comparison Table

Contaminant	CAS RN	Averaging Period (hrs)	2018 Emission Rate (g/s)	2019 Emission Rate (g/s)	2020 Emission Rate (g/s)	ER % Change from 2018 to 2019	ER % Change from 2019 to 2020
Aluminum	7429-90-5	24	1.82E+01	2.06E-02	4.52E-01	-99.89%	2101.55%
Ammonia	7664-41-7	24	7.58E-02	7.59E-02	7.59E-02	0.13%	0.00%
Arsenic and compounds	7440-38-2	24	3.65E-02	4.11E-05	9.05E-04	-99.89%	2101.55%
Barium - total water soluble	7440-39-3	24			2.09E-03	N/A	N/A
Beryllium and Beryllium Compounds	7440-41-7	24	5.26E-04	5.93E-07	1.31E-05	-99.89%	2101.55%
Cadmium and Cadmium Compounds	7440-43-9	24	4.74E-03	5.34E-06	1.18E-04	-99.89%	2101.55%
Calcium carbonate	471-34-1	24	1.36E+01	1.53E-02	3.38E-01	-99.89%	2101.55%
Calcium oxide	1305-78-8	24	6.00E-05	1.50E-05	1.50E-05	-75.00%	0.00%
Carbon monoxide	630-08-0	0.5	9.17E+02	3.06E-01	1.87E+01	-99.97%	6003.90%
Cerium	7440-45-1	24			5.10E-04	N/A	N/A
Cesium	7440-46-2	N/A			4.77E-05	N/A	N/A
Chromium compounds (metallic, divalent and trivalent forms)	7440-47-3	24	9.60E-02	1.11E-04	2.38E-03	-99.88%	2051.95%
Cobalt	7440-48-4	24	1.16E-02	1.38E-05	2.88E-04	-99.88%	1980.95%
Copper sulphate	7758-99-8	N/A	2.36E-02	6.00E-03	6.00E-03	-74.58%	0.00%
Gallium	7440-55-3	N/A			6.53E-05	N/A	N/A
Hydrochloric acid	7647-01-0	24	9.59E-05	6.61E-05	6.61E-05	-31.08%	0.00%
Hydrogen cyanide	74-90-8	24	6.00E-01	2.29E-01	2.29E-01	-61.85%	0.00%
Iron (metallic)	7439-89-6	24	0.00E+00	2.47E-02	5.44E-01	N/A	2101.55%
Lanthanum	7439-91-0	N/A	0.00E+00	1.37E-05	3.01E-04	N/A	2101.55%
Lead and Lead Compounds	7439-92-1	24	5.73E-02	6.45E-05	1.42E-03	-99.89%	2101.55%
Lead and Lead Compounds	7439-92-1	720	5.73E-02	6.45E-05	1.42E-03	-99.89%	2101.55%
Magnesium	7439-95-4	24	0.00E+00	8.42E-03	1.85E-01	N/A	2101.55%
Manganese and manganese compounds	7439-96-5	24	0.00E+00	1.08E-03	1.08E-02	N/A	905.11%
Nickel and nickel compounds	7440-02-0	8760	3.03E-02	3.71E-05	7.52E-04	-99.88%	1926.56%
Nitrogen oxides	10102-44-0	1	1.94E+02	1.58E+01	9.24E+00	-91.85%	-41.65%
Nitrogen oxides	10102-44-0	24	2.62E+01	1.30E+01	4.06E+00	-50.36%	-68.77%
Phosphorus	7723-14-0	24	2.00E-01	2.37E-04	5.22E-03	-99.88%	2101.55%
Potassium	7440-09-7	24	5.10E+00	5.72E-03	1.26E-01	-99.89%	2101.55%
Rhenium	7440-15-5	N/A			3.26E-05	N/A	N/A
Rubidium	7440-17-7	24			1.45E-04	N/A	N/A
Scandium	7440-20-2	N/A			1.18E-04	N/A	N/A
Silica (<10 µm diameter)	14808-60-7	24	5.80E+00	4.08E-02	1.51E-01	-99.30%	268.86%
Sodium	7440-23-5	N/A	0.00E+00	9.49E-04	2.09E-02	N/A	2101.55%
Sodium Metabisulphite	7681-57-4	24	1.78E-02	4.42E-03	4.42E-03	-75.15%	0.00%
Sulphur dioxide	7446-09-5	1	6.15E+01	6.15E+00	5.48E+00	-90.00%	-10.97%
Sulphur dioxide	7446-09-5	24	8.40E+00	5.23E+00	4.95E+00	-37.69%	-5.41%
Suspended particulate matter	N/A-TSP	24	3.79E+01	5.25E+01	2.42E+01	38.45%	-53.97%
Thallium	7440-28-0	24			6.53E-05	N/A	N/A
Thorium	7440-29-1	N/A			1.31E-04	N/A	N/A
Titanium	7440-32-6	24			2.74E-02	N/A	N/A
Uranium and Uranium Compounds - U in PM10	7440-61-1	8760			1.31E-04	N/A	N/A
Vanadium	7440-62-2	24	4.21E-02	4.74E-05	1.04E-03	-99.89%	2101.55%
Zinc	7440-66-6	24			1.67E-02	N/A	N/A
Zirconium	7440-67-7	24	7.00E-01	7.56E-04	1.67E-02	-99.89%	2101.55%

Emission Summary and Dispersio
New Gold - Rainy River Mine
Contaminant Comparison Table

Contaminant	2018 POI Concentration (µg/m3)	2019 POI Concentration (µg/m3)	2020 POI Concentration (µg/m3)	POI % Change from 2018 to 2019	POI % Change from 2019 to 2020
Aluminum	14.2	1.07E-01	2.19E+00	-99.25%	1946.69%
Ammonia	N/A	1.58E-01	1.41E-01	N/A	-10.79%
Arsenic and compounds	0.03	2.15E-04	4.38E-03	-99.28%	1940.18%
Barium - total water soluble			1.01E-02	N/A	N/A
Beryllium and Beryllium Compounds	0.0004	0.00E+00	6.33E-05	-100.00%	N/A
Cadmium and Cadmium Compounds	0.004	2.78E-05	5.69E-04	-99.30%	1944.36%
Calcium carbonate	10.6	7.99E-02	1.64E+00	-99.25%	1947.41%
Calcium oxide	N/A	0.00E+00	0.00E+00	N/A	N/A
Carbon monoxide	1789.9	2.50E+01	1.27E+03	-98.60%	4994.46%
Cerium			0.00E+00	N/A	N/A
Cesium			2.31E-04	N/A	N/A
Chromium compounds (metallic, divalent and trivalent forms)	0.07	5.72E-04	1.15E-02	-99.18%	1918.04%
Cobalt	0.01	7.28E-05	1.39E-03	-99.27%	1812.46%
Copper sulphate	0.01	0.00E+00	1.08E-02	-100.00%	N/A
Gallium			3.16E-04	N/A	N/A
Hydrochloric acid	N/A	0.00E+00	0.00E+00	N/A	N/A
Hydrogen cyanide	0.4	2.41E-02	7.88E-01	-93.98%	3173.41%
Iron (metallic)	0	1.29E-01	2.63E+00	N/A	1944.76%
Lanthanum	0	6.29E-05	1.46E-03	N/A	2218.12%
Lead and Lead Compounds	0.05	3.38E-04	6.88E-03	-99.32%	1934.82%
Lead and Lead Compounds	0.05	3.38E-04	1.33E-03	-99.32%	294.47%
Magnesium	0	3.73E-02	8.98E-01	N/A	2305.70%
Manganese and manganese compounds	0	8.66E-03	5.09E-02	N/A	487.86%
Nickel and nickel compounds	0.0028	7.05E-05	2.26E-04	-97.48%	220.78%
Nitrogen oxides	352.1	3.00E+02	3.61E+02	-14.93%	20.38%
Nitrogen oxides	40.8	2.70E+01	1.15E+01	-33.87%	-57.21%
Phosphorus	0.16	1.24E-03	2.53E-02	-99.23%	1942.61%
Potassium	4	2.98E-02	6.10E-01	-99.25%	1945.87%
Rhenium			1.58E-04	N/A	N/A
Rubidium			0.00E+00	N/A	N/A
Scandium			5.69E-04	N/A	N/A
Silica (<10 µm diameter)	2.5	2.72E+00	5.62E-01	8.86%	-79.34%
Sodium	0	4.97E-03	1.01E-01	N/A	1937.00%
Sodium Metabisulphite	N/A	0.00E+00	0.00E+00	N/A	N/A
Sulphur dioxide	112.4	5.24E+02	2.23E+02	366.34%	-57.49%
Sulphur dioxide	13.2	4.74E+01	1.77E+01	259.43%	-62.66%
Suspended particulate matter	55.4	9.58E+01	7.93E+01	72.92%	-17.24%
Thallium			3.16E-04	N/A	N/A
Thorium			6.33E-04	N/A	N/A
Titanium			1.33E-01	N/A	N/A
Uranium and Uranium Compounds - U in PM10			3.94E-05	N/A	N/A
Vanadium	0.03	0.00E+00	5.06E-03	-100.00%	N/A
Zinc			8.07E-02	N/A	N/A
Zirconium	0.5	0.00E+00	8.07E-02	-100.00%	N/A

APPENDIX D. AIR DISPERSION MODELLING FILES

Emission Summary and Dispersion Modelling Report
New Gold - Rainy River Mine
AERMOD Data

			Stack Parameters								Contaminant Data				Model Results (µg/m³ per g/s)				Modelled Concentrations (µg/m³)				
Source ID	Model ID	Source Description	Source Type	Volumetric Flow Rate (Am^3/s)	Gas Exit Temperature (°C)	Inner Diameter (m)	Height above Grade (m)	Height above Roof (m)	X-Coordinate (m)	Y-Coordinate (m)	Contaminant	CAS RN	Facility-Wide Emission Rate (g/s)	Averaging Period (hrs)	1-Hour Unit Concentration	24-Hour Unit Concentration	30-Day Unit Concentration	Annual Unit Concentration	0.5-Hour POI Concentration	1-Hour POI Concentration	24-Hour POI Concentration	30-Day POI Concentration	Annual POI Concentration
E_OUTCRUSH	E_OUTCRUSH	Aggregate Pit Crushing	Point	0.5	647.85	0.1	2	0	426912	5499525	Nitrogen oxides	10102-44-0	7.36E-01	1	34.35443	4.72917			3.07E+01	2.53E+01	3.48E+00	0.00E+00	0.00E+00
E_OUTCRUSH	E_OUTCRUSH	Aggregate Pit Crushing	Point	0.5	647.85	0.1	2	0	426912	5499525	Nitrogen oxides	10102-44-0	7.36E-01	24	34.35443	4.72917			3.07E+01	2.53E+01	3.48E+00	0.00E+00	0.00E+00
MOBI_CRUSH	MOBI_CRUSH	Mobile Crusher	Point	0.5	647.85	0.1	2	0	426912	5409574	Nitrogen oxides	10102-44-0	4.37E-01	24		4.10163			0.00E+00	0.00E+00	1.79E+00	0.00E+00	0.00E+00
WPs	WPs	Watering Pumps	Volume	N/A	N/A	N/A	N/A	N/A	426727	5411179	Nitrogen oxides	10102-44-0	1.01E+00	1	74.72255	5.85239			9.16E+01	7.54E+01	5.91E+00	0.00E+00	0.00E+00
WPs	WPs	Watering Pumps	Volume	N/A	N/A	N/A	N/A	N/A	426727	5411179	Nitrogen oxides	10102-44-0	5.05E-01	24	74.72255	5.85239			4.58E+01	3.77E+01	2.95E+00	0.00E+00	0.00E+00
BLAST	BLAST	Blasting	Volume	N/A	N/A	N/A	N/A	N/A	425557	5410132	Nitrogen oxides	10102-44-0	3.52E+00	1	56.10186	5.76067			2.40E+02	1.97E+02	2.03E+01	0.00E+00	0.00E+00
BLAST	BLAST	Blasting	Volume	N/A	N/A	N/A	N/A	N/A	425557	5410132	Sulphur dioxide	7446-09-5	5.50E-01	1	56.10186	5.76067			3.74E+01	3.08E+01	3.17E+00	0.00E+00	0.00E+00
BLAST	BLAST	Blasting	Volume	N/A	N/A	N/A	N/A	N/A	425557	5410132	Carbon monoxide	630-08-0	1.87E+01	0.5	56.10186	5.76067			1.27E+03	1.05E+03	1.08E+02	0.00E+00	0.00E+00
UNLOAD NPAG	UNLOAD NPAG	Ore - Haul Truck Unloading at NPAG Stockpile	Volume	N/A	N/A	N/A	N/A	N/A	423113	5409736	Suspended particulate matter	N/A-TSP	1.69E+00	24		12.02187			0.00E+00	0.00E+00	2.03E+01	0.00E+00	0.00E+00
UNLOAD OB	UNLOAD OB	Ore - Haul Truck Unloading at OB Stockpile	Volume	N/A	N/A	N/A	N/A	N/A	425279	5410021	Suspended particulate matter	N/A-TSP	1.69E+00	24		4.54355			0.00E+00	0.00E+00	7.67E+00	0.00E+00	0.00E+00
LEACH1	LEACH1	Leaching Tank 1	Volume	N/A	N/A	N/A	N/A	N/A	426520	5411070	Hydrogen cyanide	74-90-8	2.74E-02	24		3.55036			0.00E+00	0.00E+00	9.74E-02	0.00E+00	0.00E+00
LEACH2	LEACH2	Leaching Tank 2	Volume	N/A	N/A	N/A	N/A	N/A	426540	5411070	Hydrogen cyanide	74-90-8	2.74E-02	24		3.62309			0.00E+00	0.00E+00	9.94E-02	0.00E+00	0.00E+00
LEACH3	LEACH3	Leaching Tank 3	Volume	N/A	N/A	N/A	N/A	N/A	426561	5411070	Hydrogen cyanide	74-90-8	2.74E-02	24		3.63196			0.00E+00	0.00E+00	9.97E-02	0.00E+00	0.00E+00
LEACH4	LEACH4	Leaching Tank 4	Volume	N/A	N/A	N/A	N/A	N/A	426583	5411070	Hydrogen cyanide	74-90-8	2.74E-02	24		3.59612			0.00E+00	0.00E+00	9.87E-02	0.00E+00	0.00E+00
LEACH5	LEACH5	Leaching Tank 5	Volume	N/A	N/A	N/A	N/A	N/A	426582	5411089	Hydrogen cyanide	74-90-8	2.74E-02	24		3.47908			0.00E+00	0.00E+00	9.55E-02	0.00E+00	0.00E+00
LEACH6	LEACH6	Leaching Tank 6	Volume	N/A	N/A	N/A	N/A	N/A	426561	5411090	Hydrogen cyanide	74-90-8	2.74E-02	24		3.66162			0.00E+00	0.00E+00	1.00E-01	0.00E+00	0.00E+00
LEACH7	LEACH7	Leaching Tank 7	Volume	N/A	N/A	N/A	N/A	N/A	426540	5411090	Hydrogen cyanide	74-90-8	2.74E-02	24		3.66459			0.00E+00	0.00E+00	1.01E-01	0.00E+00	0.00E+00
LEACH8	LEACH8	Leaching Tank 8	Volume	N/A	N/A	N/A	N/A	N/A	426519	5411089	Hydrogen cyanide	74-90-8	2.74E-02	24		3.52852			0.00E+00	0.00E+00	9.68E-02	0.00E+00	0.00E+00
HCND1	HCND1	CN Destruction	Point	0.5	20	0.18	39	0.3	426630	5411129	Sulphur dioxide	7446-09-5	2.46E+00	1	40.89345	3.71157			1.22E+02	1.01E+02	9.14E+00	0.00E+00	0.00E+00
HCND1	HCND1	CN Destruction	Point	0.5	20	0.18	39	0.3	426630	5411129	Sulphur dioxide	7446-09-5	2.46E+00	24	40.89345	3.71157			1.22E+02	1.01E+02	9.14E+00	0.00E+00	0.00E+00
HCND2	HCND2	CN Destruction	Point	0.5	20	0.18	39	0.3	426630	5411114	Sulphur dioxide	7446-09-5	2.46E+00	1	37.01562	3.47867			1.11E+02	9.12E+01	8.57E+00	0.00E+00	0.00E+00
HCND2	HCND2	CN Destruction	Point	0.5	20	0.18	39	0.3	426630	5411114	Sulphur dioxide	7446-09-5	2.46E+00	24	37.01562	3.47867			1.11E+02	9.12E+01	8.57E+00	0.00E+00	0.00E+00
DC6	DC6	Copper Sulphate Dust Collector	Point	1.18	20	0.35	39	0.3	426631	5411044	Copper sulphate	7758-99-8	6.00E-03	N/A		1.80619			0.00E+00	0.00E+00	1.08E-02	0.00E+00	0.00E+00
SPACEHEAT1	SPACEHEAT1	Propane Heating - Plant Building	Point	0.5	450	0.3	37.2	1	426639	5411038	Nitrogen oxides	10102-44-0	3.17E-01	24		1.51975			0.00E+00	0.00E+00	4.82E-01	0.00E+00	0.00E+00
PORT1	PORT1	Propane - Underground Mine Portal 1	Point	255.8	16.85	4.5	1	N/A	426795	5410102	Nitrogen oxides	10102-44-0	6.98E-01	1	44.76866	2.03149			3.79E+01	3.12E+01	1.42E+00	0.00E+00	0.00E+00
PORT1	PORT1	Propane - Underground Mine Portal 1	Point	255.8	16.85	4.5	1	N/A	426795	5410102	Nitrogen oxides	10102-44-0	6.98E-01	24	44.76866	2.03149			3.79E+01	3.12E+01	1.42E+00	0.00E+00	0.00E+00
PORT2	PORT2	Propane - Underground Mine Portal 2	Point	255.8	16.85	4.5	1	N/A	426795	5410102	Nitrogen oxides	10102-44-0	6.98E-01	1	44.76866	2.03149			3.79E+01	3.12E+01	1.42E+00	0.00E+00	0.00E+00
PORT2	PORT2	Propane - Underground Mine Portal 2	Point	255.8	16.85	4.5	1	N/A	426795	5410102	Nitrogen oxides	10102-44-0	6.98E-01	24	44.76866	2.03149			3.79E+01	3.12E+01	1.42E+00	0.00E+00	0.00E+00
INPIT_HR	INPIT_HR	Haul Road - Material from bottom of pit to split	Line	N/A	N/A	N/A	N/A	N/A	426334	5409637	Suspended particulate matter	N/A-TSP	3.10E+00	24		3.14014			0.00E+00	0.00E+00	9.74E+00	0.00E+00	0.00E+00
INPIT_HR	INPIT_HR	Haul Road - Material from bottom of pit to split	Line	N/A	N/A	N/A	N/A	N/A	426334	5409637	Silica (<10 µm diameter)	14808-60-7	6.16E-02	24		3.14014			0.00E+00	0.00E+00	1.93E-01	0.00E+00	0.00E+00
NPAG_HR	NPAG_HR	Haul Road - NPAG from pit split to storage	Line	N/A	N/A	N/A	N/A	N/A	424701	5409942	Silica (<10 µm diameter)	14808-60-7	1.64E-02	24		6.77515			0.00E+00	0.00E+00	1.11E-01	0.00E+00	0.00E+00
LG&PAG_HR	LG&PAG_HR	Haul Road - Low grade ore & PAG out of pit to	Line	N/A	N/A	N/A	N/A	N/A	426361	5409608	Silica (<10 µm diameter)	14808-60-7	1.61E-02	24		4.53046			0.00E+00	0.00E+00	7.31E-02	0.00E+00	0.00E+00
PAG_HR	PAG_HR	Haul Road - PAG from split to storage	Line	N/A	N/A	N/A	N/A	N/A	427167	5409803	Silica (<10 µm diameter)	14808-60-7	1.61E-02	24		4.80257			0.00E+00	0.00E+00	7.74E-02	0.00E+00	0.00E+00
CONST_HR	CONST_HR	Haul Road - Construction Equipment	Line	N/A	N/A	N/A	N/A	N/A	421009	5413369	Suspended particulate matter	N/A-TSP	1.22E+00	24		4.69106			0.00E+00	0.00E+00	5.74E+00	0.00E+00	0.00E+00
CONST_HR	CONST_HR	Haul Road - Construction Equipment	Line	N/A	N/A	N/A	N/A	N/A	421009	5413369	Silica (<10 µm diameter)	14808-60-7	2.29E-02	24		4.69106			0.00E+00	0.00E+00	1.07E-01	0.00E+00	0.00E+00
EF5	EF5	Electrowinning	Point	0.5	20	0.18	39	0.3	426656	5411065	Ammonia	7664-41-7	7.54E-02	24		1.87369			0.00E+00	0.00E+00	1.41E-01	0.00E+00	0.00E+00
WMRS	WMRS	Stockpile - Mix of OVB & NPAG	Area	N/A	N/A	N/A	8.3	N/A	423113	5409736	Suspended particulate matter	N/A-TSP	1.92E+00	24	57.39444	8.70608	1.92194	48.12%	1.34E+02	1.10E+02	1.68E+01	3.70E+00	9.26E-01
WMRS	WMRS	Stockpile - Mix of OVB & NPAG	Area	N/A	N/A	N/A	8.3	N/A	423113	5409736	Aluminum	7429-90-5	9.13E-02	24	57.39444	8.70608	1.92194	48.12%	6.36E+00	5.24E+00	7.95E-01	1.76E-01	4.39E-02
WMRS	WMRS	Stockpile - Mix of OVB & NPAG	Area	N/A	N/A	N/A	8.3	N/A	423113	5409736	Arsenic and compounds	7440-38-2	1.83E-04	24	57.39444	8.70608	1.92194	48.12%	1.27E-02	1.05E-02	1.59E-03	3.51E-04	8.79E-05
WMRS	WMRS	Stockpile - Mix of OVB & NPAG	Area	N/A	N/A	N/A	8.3	N/A	423113	5409736	Barium - total water soluble	7440-39-3	4.22E-04	24	57.39444	8.70608	1.92194	48.12%	2.94E-02	2.42E-02	3.67E-03	8.10E-04	2.03E-04
WMRS	WMRS	Stockpile - Mix of OVB & NPAG	Area	N/A	N/A	N/A	8.3	N/A	423113	5409736	Beryllium and Beryllium Compounds	7440-41-7	2.64E-06	24	57.39444	8.70608	1.92194	48.12%	1.84E-04	1.51E-04	2.29E-05	5.07E-06	1.27E-06
WMRS	WMRS	Stockpile - Mix of OVB & NPAG	Area	N/A	N/A	N/A	8.3	N/A	423113	5409736	Calcium carbonate	471-34-1	6.81E-02	24	57.39444	8.70608	1.92194	48.12%	4.75E+00	3.91E+00	5.93E-01	1.31E-01	3.28E-02
WMRS	WMRS	Stockpile - Mix of OVB & NPAG	Area	N/A	N/A	N/A	8.3	N/A	423113	5409736	Cadmium and Cadmium Compounds	7440-43-9	2.37E-05	24	57.39444	8.70608	1.92194	48.12%	1.65E-03	1.36E-03	2.06E-04	4.56E-05	1.14E-05
WMRS	WMRS	Stockpile - Mix of OVB & NPAG	Area	N/A	N/A	N/A	8.3	N/A	423113	5409736	Cobalt	7440-48-4	5.80E-05	24	57.39444	8.70608	1.92194	48.12%	4.04E-03	3.33E-03	5.05E-04	1.11E-04	2.79E-05
WMRS	WMRS	Stockpile - Mix of OVB & NPAG	Area	N/A	N/A	N/A	8.3	N/A	423113	5409736	Chromium compounds (metallic, divalent and trivalent forms)	7440-47-3	4.81E-04	24	57.39444	8.70608	1.92194	48.12%	3.35E-02	2.76E-02	4.19E-03	9.24E-04	2.31E-04
WMRS	WMRS	Stockpile - Mix of OVB & NPAG	Area	N/A	N/A	N/A	8.3	N/A	423113	5409736	Cesium	7440-46-2	9.62E-06	N/A	57.39444	8.70608	1.92194	48.12%	6.70E-04	5.52E-04	8.37E-05	1.85E-05	4.63E-06
WMRS	WMRS	Stockpile - Mix of OVB & NPAG	Area	N/A	N/A	N/A	8.3	N/A	423113	5409736	Iron (metallic)	7439-89-6	1.10E-01	24	57.39444	8.70608	1.92194	48.12%	7.65E+00	6.30E+00	9.56E-01	2.11E-01	5.28E-02
WMRS	WMRS	Stockpile - Mix of OVB & NPAG	Area	N/A	N/A	N/A	8.3	N/A	423113	5409736	Gallium	7440-55-3	1.32E-05	N/A	57.39444	8.70608	1.92194	48.12%	9.18E-04	7.56E-04	1.15E-04	2.53E-05	6.34E-06
WMRS	WMRS	Stockpile - Mix of OVB & NPAG	Area	N/A	N/A	N/A	8.3	N/A	423113	5409736	Potassium	7440-09-7	2.54E-02	24	57.39444	8.70608	1.92194	48.12%	1.77E+00	1.46E+00	2.21E-01	4.89E-02	1.22E-02
WMRS	WMRS	Stockpile - Mix of OVB & NPAG	Area	N/A	N/A	N/A	8.3	N/A	423113	5409736	Lanthanum	7439-91-0	6.07E-05	N/A	57.39444	8.70608	1.92194	48.12%	4.23E-03	3.49E-03	5.29E-04	1.17E-04	2.92E-05
WMRS	WMRS	Stockpile - Mix of OVB & NPAG	Area	N/A	N/A	N/A	8.3	N/A	423113	5409736	Magnesium	7439-95-4	3.74E-02	24	57.39444	8.70608	1.92194	48.12%	2.61E+00	2.15E+00	3.26E-01	7.19E-02	1.80E-02
WMRS	WMRS	Stockpile - Mix of OVB & NPAG	Area	N/A	N/A	N/A	8.3	N/A	423113	5409736	Manganese and manganese compounds	7439-96-5	2.12E-03	24	57.39444	8.70608	1.92194	48.12%	1.48E-01	1.22E-01	1.85E-02	4.08E-03	1.02E-03
WMRS	WMRS	Stockpile - Mix of OVB & NPAG	Area	N/A	N/A	N/A	8.3	N/A	423113	5409736	Sodium	7440-23-5	4.22E-03	N/A	57.39444	8.70608	1.92194	48.12%	2.94E-01	2.42E-01	3.67E-02	8.10E-03	2.03E-03
WMRS	WMRS	Stockpile - Mix of OVB & NPAG	Area	N/A	N/A	N/A	8.3	N/A	423113	5409736	Nickel and nickel compounds	7440-02-0	1.52E-04	8760	57.39444	8.70608	1.92194	48.12%	1.06E-02	8.70E-03	1.32E-03	2.91E-04	7.29E-05
WMRS	WMRS	Stockpile - Mix of OVB & NPAG	Area	N/A	N/A	N/A	8.3	N/A	423113	5409736	Phosphorus	7723-14-0	1.05E-03	24	57.39444	8.70608	1.92194	48.12%	7.35E-02	6.05E-02	9.18E-03	2.03E-03	5.07E-04
WMRS	WMRS	Stockpile - Mix of OVB & NPAG	Area	N/A	N/A	N/A	8.3	N/A	423113	5409736	Lead and Lead Compounds	7439-92-1	2.87E-04	24	57.39444	8.70608	1.92194	48.12%	2.00E-02	1.65E-02	2.50E-03	5.51E-04	1.38E-04
WMRS	WMRS	Stockpile - Mix of OVB & NPAG	Area	N/A	N/A	N/A	8.3	N/A	423113	5409736	Lead and Lead Compounds	7439-92-1	2.87E-04	720	57.39444	8.70608	1.92194	48.12%	2.00E-02	1.65E-02	2.50E-03	5.51E-04	1.38E-04
WMRS	WMRS	Stockpile - Mix of OVB & NPAG	Area	N/A	N/A	N/A	8.3	N/A	423113	5409736	Rhenium	7440-15-5	6.59E-06	N/A	57.39444	8.70608	1.92194	48.12%	4.59E-04	3.78E-04	5.74E-05	1.27E-05	3.17E-06
WMRS	WMRS	Stockpile - Mix of OVB & NPAG	Area	N/A	N/A	N/A	8.3	N/A	423113	5409736	Scandium	7440-20-2	2.37E-05	N/A	57.39444	8.70608	1.92194	48.12%	1.65E-03	1.36E-03	2.06E-04	4.56E-05	1.14E-05
WMRS	WMRS	Stockpile - Mix of OVB & NPAG	Area	N/A	N/A	N/A	8.3	N/A	423113	5409736	Thorium	7440-29-1	2.64E-05	N/A	57.39444	8.70608	1.92194	48.12%	1.84E-03	1.51E-03	2.29E-04	5.07E-05	1.27E-05
WMRS	WMRS	Stockpile - Mix of OVB & NPAG	Area	N/A	N/A	N/A	8.3	N/A	423113	5409736	Titanium	7440-32-6	5.53E-03	24	57.39444	8.70608	1.92194	48.12%	3.86E-01	3.18E-01	4.82E-02	1.06E-02	2.66E-03
WMRS	WMRS	Stockpile - Mix of OVB & NPAG	Area	N/A	N/A	N/A	8.3	N/A	423113	5409736	Thallium	7440-28-0	1.32E-05	24	57.39444	8.70608	1.92194	48.12%	9.18E-04	7.56E-04	1.15E-04	2.53E-05	6.34E-06
WMRS	WMRS	Stockpile - Mix of OVB & NPAG	Area	N/A	N/A	N/A	8.3	N/A	423113	5409736	Uranium and Uranium Compounds - U in PM10	7440-61-1	2.64E-05	8760	57.39444	8.70608	1.92194	48.12%	1.84E-03	1.51E-03	2.29E-04	5.07E-05	1.27E-05
WMRS	WMRS	Stockpile - Mix of OVB & NPAG	Area	N/A	N/A	N/A	8.3	N/A	423113	5409736	Vanadium	7440-62-2	2.11E-04	24	57.39444	8.70608	1.92194	48.12%	1.47E-02	1.21E-02	1.83E-03	4.05E-04	1.01E-04
WMRS	WMRS	Stockpile - Mix of OVB & NPAG	Area	N/A	N/A	N/A	8.3	N/A	423113	5409736	Zinc	7440-66-6	3.36E-03	24	57.39444	8.70608	1.92194	48.12%	2.34E-01	1.93E-01	2.93E-02	6.46E-03	1.62E-03
WMRS	WMRS	Stockpile - Mix of OVB & NPAG	Area	N/A	N/A	N/A	8.3	N/A	423113	5409736	Zirconium	7440-67-7	3.36E-03	24	57.39444	8.70608	1.92194	48.12%	2.34E-01	1.93E-01	2.93E-02	6.46E-03	1.62E-03
OC1	OC1	Stockpile - NAG Quarry and Pad	Area	N/A	N/A	N/A	6	N/A	428179	5410508	Aluminum	7429-90-5	3.57E-02	24		3.87742	0.6054	26.82%	0.00E+00	0.00E+00	1.38E-01	2.16E-02	9.57E-03
OC1	OC1	Stockpile - NAG Quarry and Pad	Area	N/A	N/A	N/A	6	N/A	428179	5410508	Arsenic and compounds	7440-38-2	7.14E-05	24		3.87742	0.6054	26.82%	0.00E+00	0.00E+00	2.77E-04	4.32E-05	1.91E-05
OC1	OC1	Stockpile - NAG Quarry and Pad	Area	N/A	N/A	N/A	6	N/A	428179	5410508	Barium - total water soluble	7440-39-3	1.65E-04	24		3.87742	0.6054	26.82%	0.00E+00	0.00E+00	6.39E-04	9.98E-05	4.42E-05
OC1	OC1	Stockpile - NAG Quarry and Pad	Area	N/A	N/A	N/A	6	N/A	428179	5410508	Beryllium and Beryllium Compounds	7440-41-7	1.03E-06	24		3.87742	0.6054	26.82%	0.00E+00	0.00E+00	3.99E-06	6.24E-07	2.76E-07
OC1	OC1	Stockpile - NAG Quarry and Pad	Area	N/A	N/A	N/A	6	N/A	428179	5410508	Calcium carbonate	471-34-1	2.66E-02	24		3.87742	0.6054	26.82%	0.00E+00	0.00E+00	1.03E-01	1.61E-02	7.14E-03
OC1	OC1	Stockpile - NAG Quarry and Pad	Area	N/A	N/A	N/A	6	N/A	428179	5410508	Cadmium and Cadmium Compounds	7440-43-9	9.27E-06	24		3.87742	0.6054	26.82%	0.00E+00	0.00E+00	3.59E-05	5.61E-06	2.49E-06
OC1	OC1	Stockpile - NAG Quarry and Pad	Area	N/A	N/A	N/A	6	N/A	428179	5410508	Cobalt	7440-48-4	2.27E-05	24		3.87742	0.6054	26.82%	0.00E+00	0.00E+00	8.79E-05	1.37E-05	6.08E-06
OC1	OC1	Stockpile - NAG Quarry and Pad	Area	N/A	N/A	N/A	6	N/A	428179	5410508	Chromium compounds (metallic, divalent and trivalent forms)	7440-47-3	1.88E-04	24		3.87742	0.6054	26.82%	0.00E+00	0.00E+00	7.29E-04	1.14E-04	5.04E-05
OC1	OC1	Stockpile - NAG Quarry and Pad	Area	N/A	N/A	N/A	6	N/A	428179	5410508	Cesium	7440-46-2	3.76E-06	N/A		3.87742	0.6054	26.82%	0.00E+00	0.00E+00	1.46E-05	2.28E-06	1.01E-06
OC1	OC1	Stockpile - NAG Quarry and Pad	Area	N/A	N/A	N/A	6	N/A	428179	5410508	Iron (metallic)	7439-89-6	4.29E-02	24		3.87742	0.6054	26.82%	0.00E+00	0.00E+00	1.66E-01	2.60E-02	1.15E-02
OC1	OC1	Stockpile - NAG Quarry and Pad	Area	N/A	N/A	N/A	6	N/A	428179	5410508	Gallium	7440-55-3	5.15E-06	N/A		3.87742	0.6054	26.82%	0.00E+00	0.00E+00	2.00E-05	3.12E-06	1.38E-06
OC1	OC1	Stockpile - NAG Quarry and Pad	Area	N/A	N/A	N/A	6	N/A	428179	5410508	Potassium	7440-09-7	9.94E-03	24		3.87742	0.6054	26.82%	0.00E+00	0.00E+00	3.85E-02	6.02E-03	2.67E-03
OC1	OC1	Stockpile - NAG Quarry and Pad	Area	N/A	N/A	N/A	6	N/A	428179	5410508	Lanthanum	7439-91-0	2.37E-05	N/A		3.87742	0.6054	26.82%	0.00E+00	0.00E+00	9.21E-05	1.44E-05	6.37E-06
OC1	OC1	Stockpile - NAG Quarry and Pad	Area	N/A	N/A	N/A	6	N/A	428179	5410508	Magnesium	7439-95-4	1.46E-02	24		3.87742	0.6054	26.82%	0.00E+00	0.00E+00	5.67E-02	8.85E-03	3.92E-03
OC1	OC1	Stockpile - NAG Quarry and Pad	Area	N/A	N/A	N/A	6	N/A	428179	5410508	Manganese and manganese compounds	7439-96-5	8.29E-04	24		3.87742	0.6054	26.82%	0.00E+00	0.00E+00	3.21E-03	5.02E-04	2.22E-04
OC1	OC1	Stockpile - NAG Quarry and Pad	Area	N/A	N/A	N/A	6	N/A	428179	5410508	Sodium	7440-23-5	1.65E-03	N/A		3.87742	0.6054	26.82%	0.00E+00	0.00E+00	6.39E-03	9.98E-04	4.42E-04
OC1	OC1	Stockpile - NAG Quarry and Pad	Area	N/A	N/A	N/A	6	N/A	428179	5410508	Nickel and nickel compounds	7440-02-0	5.92E-05	8760		3.87742	0.6054	26.82%	0.00E+00	0.00E+00	2.30E-04	3.59E-05	1.59E-05
OC1	OC1	Stockpile - NAG Quarry and Pad	Area	N/A	N/A	N/A	6	N/A	428179	5410508	Phosphorus	7723-14-0	4.12E-04	24		3.87742	0.6054	26.82%	0.00E+00	0.00E+00	1.60E-03	2.49E-04	1.10E-04
OC1	OC1	Stockpile - NAG Quarry and Pad	Area	N/A	N/A	N/A	6	N/A	428179	5410508	Lead and Lead Compounds	7439-92-1	1.12E-04	24		3.87742	0.6054	26.82%	0.00E+00	0.00E+00	4.35E-04	6.78E-05	3.01E-05
OC1	OC1	Stockpile - NAG Quarry and Pad	Area	N/A	N/A	N/A	6	N/A	428179	5410508	Lead and Lead Compounds	7439-92-1	1.12E-04	720		3.87742	0.6054	26.82%	0.00E+00	0.00E+00	4.35E-04	6.78E-05	3.01E-05
OC1	OC1	Stockpile - NAG Quarry and Pad	Area	N/A	N/A	N/A	6	N/A	428179	5410508	Rhenium	7440-15-5	2.58E-06	N/A		3.87742	0.6054	26.82%	0.00E+00	0.00E+00	9.98E-06	1.56E-06	6.91E-07
OC1	OC1	Stockpile - NAG Quarry and Pad	Area	N/A	N/A	N/A	6	N/A	428179	5410508	Scandium	7440-20-2	9.27E-06	N/A		3.87742	0.6054	26.82%	0.00E+00	0.00E+00	3.59E-05	5.61E-06	2.49E-06
OC1	OC1	Stockpile - NAG Quarry and Pad	Area	N/A	N/A	N/A	6	N/A	428179	5410508	Thorium	7440-29-1	1.03E-05	N/A		3.87742	0.6054	26.82%	0.00E+00	0.00E+00	3.99E-05	6.24E-06	2.76E-06
OC1	OC1	Stockpile - NAG Quarry and Pad	Area	N/A	N/A	N/A	6	N/A	428179	5410508	Titanium	7440-32-6	2.16E-03	24		3.87742	0.6054	26.82%	0.00E+00	0.00E+00	8.39E-03	1.31E-03	5.80E-04
OC1	OC1	Stockpile - NAG Quarry and Pad	Area	N/A	N/A	N/A	6	N/A	428179	5410508	Thallium	7440-28-0	5.15E-06	24		3.87742	0.6054	26.82%	0.00E+00	0.00E+00	2.00E-05	3.12E-06	1.38E-06
OC1	OC1	Stockpile - NAG Quarry and Pad	Area	N/A	N/A	N/A	6	N/A	428179	5410508	Uranium and Uranium Compounds - U in PM10	7440-61-1	1.03E-05	8760		3.87742	0.6054	26.82%	0.00E+00	0.00E+00	3.99E-05	6.24E-06	2.76E-06
OC1	OC1	Stockpile - NAG Quarry and Pad	Area	N/A	N/A	N/A	6	N/A	428179	5410508	Vanadium	7440-62-2	8.23E-05	24		3.87742	0.6054	26.82%	0.00E+00	0.00E+00	3.19E-04	4.99E-05	2.21E-05
OC1	OC1	Stockpile - NAG Quarry and Pad	Area	N/A	N/A	N/A	6	N/A	428179	5410508	Zinc	7440-66-6	1.31E-03	24		3.87742	0.6054	26.82%	0.00E+00	0.00E+00	5.09E-03	7.95E-04	3.52E-04

			Stack Parameters								Contaminant Data				Model Results (µg/m^3 per g/s)				Modelled Concentrations (µg/m^3)				
Source ID	Model ID	Source Description	Source Type	Volumetric Flow Rate (Am^3/s)	Gas Exit Temperature (°C)	Inner Diameter (m)	Height above Grade (m)	Height above Roof (m)	X-Coordinate (m)	Y-Coordinate (m)	Contaminant	CAS RN	Facility-Wide Emission Rate (g/s)	Averaging Period (hrs)	1-Hour Unit Concentration	24-Hour Unit Concentration	30-Day Unit Concentration	Annual Unit Concentration	0.5-Hour POI Concentration	1-Hour POI Concentration	24-Hour POI Concentration	30-Day POI Concentration	Annual POI Concentration
OC1	OC1	Stockpile - NAG Quarry and Pad	Area	N/A	N/A	N/A	6	N/A	428179	5410508	Zirconium	7440-67-7	1.31E-03	24		3.87742	0.6054	26.82%	0.00E+00	0.00E+00	5.09E-03	7.95E-04	3.52E-04
LGO	LGO	Stockpile - OVB/HPAG w/ PAG Cap, then LG/MG	Area	N/A	N/A	N/A	4	N/A	427210	5409428	Aluminum	7429-90-5	4.27E-02	24		3.48924	0.59811	24.62%	0.00E+00	0.00E+00	1.49E-01	2.55E-02	1.05E-02
LGO	LGO	Stockpile - OVB/HPAG w/ PAG Cap, then LG/MG	Area	N/A	N/A	N/A	4	N/A	427210	5409428	Arsenic and compounds	7440-38-2	8.54E-05	24		3.48924	0.59811	24.62%	0.00E+00	0.00E+00	2.98E-04	5.11E-05	2.10E-05
LGO	LGO	Stockpile - OVB/HPAG w/ PAG Cap, then LG/MG	Area	N/A	N/A	N/A	4	N/A	427210	5409428	Barium - total water soluble	7440-39-3	1.97E-04	24		3.48924	0.59811	24.62%	0.00E+00	0.00E+00	6.88E-04	1.18E-04	4.86E-05
LGO	LGO	Stockpile - OVB/HPAG w/ PAG Cap, then LG/MG	Area	N/A	N/A	N/A	4	N/A	427210	5409428	Beryllium and Beryllium Compounds	7440-41-7	1.23E-06	24		3.48924	0.59811	24.62%	0.00E+00	0.00E+00	4.30E-06	7.37E-07	3.03E-07
LGO	LGO	Stockpile - OVB/HPAG w/ PAG Cap, then LG/MG	Area	N/A	N/A	N/A	4	N/A	427210	5409428	Calcium carbonate	471-34-1	3.19E-02	24		3.48924	0.59811	24.62%	0.00E+00	0.00E+00	1.11E-01	1.91E-02	7.84E-03
LGO	LGO	Stockpile - OVB/HPAG w/ PAG Cap, then LG/MG	Area	N/A	N/A	N/A	4	N/A	427210	5409428	Cadmium and Cadmium Compounds	7440-43-9	1.11E-05	24		3.48924	0.59811	24.62%	0.00E+00	0.00E+00	3.87E-05	6.63E-06	2.73E-06
LGO	LGO	Stockpile - OVB/HPAG w/ PAG Cap, then LG/MG	Area	N/A	N/A	N/A	4	N/A	427210	5409428	Cobalt	7440-48-4	2.71E-05	24		3.48924	0.59811	24.62%	0.00E+00	0.00E+00	9.46E-05	1.62E-05	6.68E-06
LGO	LGO	Stockpile - OVB/HPAG w/ PAG Cap, then LG/MG	Area	N/A	N/A	N/A	4	N/A	427210	5409428	Chromium compounds (metallic, divalent and trivalent forms)	7440-47-3	2.25E-04	24		3.48924	0.59811	24.62%	0.00E+00	0.00E+00	7.85E-04	1.35E-04	5.54E-05
LGO	LGO	Stockpile - OVB/HPAG w/ PAG Cap, then LG/MG	Area	N/A	N/A	N/A	4	N/A	427210	5409428	Cesium	7440-46-2	4.50E-06	N/A		3.48924	0.59811	24.62%	0.00E+00	0.00E+00	1.57E-05	2.69E-06	1.11E-06
LGO	LGO	Stockpile - OVB/HPAG w/ PAG Cap, then LG/MG	Area	N/A	N/A	N/A	4	N/A	427210	5409428	Iron (metallic)	7439-89-6	5.13E-02	24		3.48924	0.59811	24.62%	0.00E+00	0.00E+00	1.79E-01	3.07E-02	1.26E-02
LGO	LGO	Stockpile - OVB/HPAG w/ PAG Cap, then LG/MG	Area	N/A	N/A	N/A	4	N/A	427210	5409428	Gallium	7440-55-3	6.16E-06	N/A		3.48924	0.59811	24.62%	0.00E+00	0.00E+00	2.15E-05	3.69E-06	1.52E-06
LGO	LGO	Stockpile - OVB/HPAG w/ PAG Cap, then LG/MG	Area	N/A	N/A	N/A	4	N/A	427210	5409428	Potassium	7440-09-7	1.19E-02	24		3.48924	0.59811	24.62%	0.00E+00	0.00E+00	4.15E-02	7.11E-03	2.93E-03
LGO	LGO	Stockpile - OVB/HPAG w/ PAG Cap, then LG/MG	Area	N/A	N/A	N/A	4	N/A	427210	5409428	Lanthanum	7439-91-0	2.84E-05	N/A		3.48924	0.59811	24.62%	0.00E+00	0.00E+00	9.91E-05	1.70E-05	7.00E-06
LGO	LGO	Stockpile - OVB/HPAG w/ PAG Cap, then LG/MG	Area	N/A	N/A	N/A	4	N/A	427210	5409428	Magnesium	7439-95-4	1.75E-02	24		3.48924	0.59811	24.62%	0.00E+00	0.00E+00	6.11E-02	1.05E-02	4.31E-03
LGO	LGO	Stockpile - OVB/HPAG w/ PAG Cap, then LG/MG	Area	N/A	N/A	N/A	4	N/A	427210	5409428	Manganese and manganese compounds	7439-96-5	9.92E-04	24		3.48924	0.59811	24.62%	0.00E+00	0.00E+00	3.46E-03	5.93E-04	2.44E-04
LGO	LGO	Stockpile - OVB/HPAG w/ PAG Cap, then LG/MG	Area	N/A	N/A	N/A	4	N/A	427210	5409428	Sodium	7440-23-5	1.97E-03	N/A		3.48924	0.59811	24.62%	0.00E+00	0.00E+00	6.88E-03	1.18E-03	4.86E-04
LGO	LGO	Stockpile - OVB/HPAG w/ PAG Cap, then LG/MG	Area	N/A	N/A	N/A	4	N/A	427210	5409428	Nickel and nickel compounds	7440-02-0	7.09E-05	8760		3.48924	0.59811	24.62%	0.00E+00	0.00E+00	2.47E-04	4.24E-05	1.74E-05
LGO	LGO	Stockpile - OVB/HPAG w/ PAG Cap, then LG/MG	Area	N/A	N/A	N/A	4	N/A	427210	5409428	Phosphorus	7723-14-0	4.93E-04	24		3.48924	0.59811	24.62%	0.00E+00	0.00E+00	1.72E-03	2.95E-04	1.21E-04
LGO	LGO	Stockpile - OVB/HPAG w/ PAG Cap, then LG/MG	Area	N/A	N/A	N/A	4	N/A	427210	5409428	Lead and Lead Compounds	7439-92-1	1.34E-04	24		3.48924	0.59811	24.62%	0.00E+00	0.00E+00	4.68E-04	8.02E-05	3.30E-05
LGO	LGO	Stockpile - OVB/HPAG w/ PAG Cap, then LG/MG	Area	N/A	N/A	N/A	4	N/A	427210	5409428	Lead and Lead Compounds	7439-92-1	1.34E-04	720		3.48924	0.59811	24.62%	0.00E+00	0.00E+00	4.68E-04	8.02E-05	3.30E-05
LGO	LGO	Stockpile - OVB/HPAG w/ PAG Cap, then LG/MG	Area	N/A	N/A	N/A	4	N/A	427210	5409428	Rhenium	7440-15-5	3.08E-06	N/A		3.48924	0.59811	24.62%	0.00E+00	0.00E+00	1.08E-05	1.84E-06	7.59E-07
LGO	LGO	Stockpile - OVB/HPAG w/ PAG Cap, then LG/MG	Area	N/A	N/A	N/A	4	N/A	427210	5409428	Scandium	7440-20-2	1.11E-05	N/A		3.48924	0.59811	24.62%	0.00E+00	0.00E+00	3.87E-05	6.63E-06	2.73E-06
LGO	LGO	Stockpile - OVB/HPAG w/ PAG Cap, then LG/MG	Area	N/A	N/A	N/A	4	N/A	427210	5409428	Thorium	7440-29-1	1.23E-05	N/A		3.48924	0.59811	24.62%	0.00E+00	0.00E+00	4.30E-05	7.37E-06	3.03E-06
LGO	LGO	Stockpile - OVB/HPAG w/ PAG Cap, then LG/MG	Area	N/A	N/A	N/A	4	N/A	427210	5409428	Titanium	7440-32-6	2.59E-03	24		3.48924	0.59811	24.62%	0.00E+00	0.00E+00	9.03E-03	1.55E-03	6.37E-04
LGO	LGO	Stockpile - OVB/HPAG w/ PAG Cap, then LG/MG	Area	N/A	N/A	N/A	4	N/A	427210	5409428	Thallium	7440-28-0	6.16E-06	24		3.48924	0.59811	24.62%	0.00E+00	0.00E+00	2.15E-05	3.69E-06	1.52E-06
LGO	LGO	Stockpile - OVB/HPAG w/ PAG Cap, then LG/MG	Area	N/A	N/A	N/A	4	N/A	427210	5409428	Uranium and Uranium Compounds - U in PM10	7440-61-1	1.23E-05	8760		3.48924	0.59811	24.62%	0.00E+00	0.00E+00	4.30E-05	7.37E-06	3.03E-06
LGO	LGO	Stockpile - OVB/HPAG w/ PAG Cap, then LG/MG	Area	N/A	N/A	N/A	4	N/A	427210	5409428	Vanadium	7440-62-2	9.85E-05	24		3.48924	0.59811	24.62%	0.00E+00	0.00E+00	3.44E-04	5.89E-05	2.43E-05
LGO	LGO	Stockpile - OVB/HPAG w/ PAG Cap, then LG/MG	Area	N/A	N/A	N/A	4	N/A	427210	5409428	Zinc	7440-66-6	1.57E-03	24		3.48924	0.59811	24.62%	0.00E+00	0.00E+00	5.48E-03	9.40E-04	3.87E-04
LGO	LGO	Stockpile - OVB/HPAG w/ PAG Cap, then LG/MG	Area	N/A	N/A	N/A	4	N/A	427210	5409428	Zirconium	7440-67-7	1.57E-03	24		3.48924	0.59811	24.62%	0.00E+00	0.00E+00	5.48E-03	9.40E-04	3.87E-04
EMRS S	EMRS S	Stockpile - Mix of OVB & PAG, high OVB pct. (18 m avg.)	Area	N/A	N/A	N/A	18	N/A	424350	5410746	Suspended particulate matter	N/A-TSP	1.51E+00	24	31.64546	3.7477	0.78439	18.35%	5.81E+01	4.79E+01	5.67E+00	1.19E+00	2.78E-01
EMRS S	EMRS S	Stockpile - Mix of OVB & PAG, high OVB pct. (18 m avg.)	Area	N/A	N/A	N/A	18	N/A	424350	5410746	Aluminum	7429-90-5	7.18E-02	24	31.64546	3.7477	0.78439	18.35%	2.76E+00	2.27E+00	2.69E-01	5.63E-02	1.32E-02
EMRS S	EMRS S	Stockpile - Mix of OVB & PAG, high OVB pct. (18 m avg.)	Area	N/A	N/A	N/A	18	N/A	424350	5410746	Arsenic and compounds	7440-38-2	1.44E-04	24	31.64546	3.7477	0.78439	18.35%	5.52E-03	4.54E-03	5.38E-04	1.13E-04	2.63E-05
EMRS S	EMRS S	Stockpile - Mix of OVB & PAG, high OVB pct. (18 m avg.)	Area	N/A	N/A	N/A	18	N/A	424350	5410746	Barium - total water soluble	7440-39-3	3.31E-04	24	31.64546	3.7477	0.78439	18.35%	1.27E-02	1.05E-02	1.24E-03	2.60E-04	6.08E-05
EMRS S	EMRS S	Stockpile - Mix of OVB & PAG, high OVB pct. (18 m avg.)	Area	N/A	N/A	N/A	18	N/A	424350	5410746	Beryllium and Beryllium Compounds	7440-41-7	2.07E-06	24	31.64546	3.7477	0.78439	18.35%	7.96E-05	6.56E-05	7.76E-06	1.62E-06	3.80E-07
EMRS S	EMRS S	Stockpile - Mix of OVB & PAG, high OVB pct. (18 m avg.)	Area	N/A	N/A	N/A	18	N/A	424350	5410746	Calcium carbonate	471-34-1	5.35E-02	24	31.64546	3.7477	0.78439	18.35%	2.06E+00	1.69E+00	2.01E-01	4.20E-02	9.83E-03
EMRS S	EMRS S	Stockpile - Mix of OVB & PAG, high OVB pct. (18 m avg.)	Area	N/A	N/A	N/A	18	N/A	424350	5410746	Cadmium and Cadmium Compounds	7440-43-9	1.86E-05	24	31.64546	3.7477	0.78439	18.35%	7.16E-04	5.90E-04	6.99E-05	1.46E-05	3.42E-06
EMRS S	EMRS S	Stockpile - Mix of OVB & PAG, high OVB pct. (18 m avg.)	Area	N/A	N/A	N/A	18	N/A	424350	5410746	Cobalt	7440-48-4	4.56E-05	24	31.64546	3.7477	0.78439	18.35%	1.75E-03	1.44E-03	1.71E-04	3.57E-05	8.36E-06
EMRS S	EMRS S	Stockpile - Mix of OVB & PAG, high OVB pct. (18 m avg.)	Area	N/A	N/A	N/A	18	N/A	424350	5410746	Chromium compounds (metallic, divalent and trivalent forms)	7440-47-3	3.78E-04	24	31.64546	3.7477	0.78439	18.35%	1.45E-02	1.20E-02	1.42E-03	2.97E-04	6.94E-05
EMRS S	EMRS S	Stockpile - Mix of OVB & PAG, high OVB pct. (18 m avg.)	Area	N/A	N/A	N/A	18	N/A	424350	5410746	Cesium	7440-46-2	7.56E-06	N/A	31.64546	3.7477	0.78439	18.35%	2.91E-04	2.39E-04	2.83E-05	5.93E-06	1.39E-06
EMRS S	EMRS S	Stockpile - Mix of OVB & PAG, high OVB pct. (18 m avg.)	Area	N/A	N/A	N/A	18	N/A	424350	5410746	Iron (metallic)	7439-89-6	8.63E-02	24	31.64546	3.7477	0.78439	18.35%	3.32E+00	2.73E+00	3.23E-01	6.77E-02	1.58E-02
EMRS S	EMRS S	Stockpile - Mix of OVB & PAG, high OVB pct. (18 m avg.)	Area	N/A	N/A	N/A	18	N/A	424350	5410746	Gallium	7440-55-3	1.04E-05	N/A	31.64546	3.7477	0.78439	18.35%	3.98E-04	3.28E-04	3.88E-05	8.12E-06	1.90E-06
EMRS S	EMRS S	Stockpile - Mix of OVB & PAG, high OVB pct. (18 m avg.)	Area	N/A	N/A	N/A	18	N/A	424350	5410746	Potassium	7440-09-7	2.00E-02	24	31.64546	3.7477	0.78439	18.35%	7.68E-01	6.33E-01	7.49E-02	1.57E-02	3.67E-03
EMRS S	EMRS S	Stockpile - Mix of OVB & PAG, high OVB pct. (18 m avg.)	Area	N/A	N/A	N/A	18	N/A	424350	5410746	Lanthanum	7439-91-0	4.77E-05	N/A	31.64546	3.7477	0.78439	18.35%	1.83E-03	1.51E-03	1.79E-04	3.75E-05	8.76E-06
EMRS S	EMRS S	Stockpile - Mix of OVB & PAG, high OVB pct. (18 m avg.)	Area	N/A	N/A	N/A	18	N/A	424350	5410746	Magnesium	7439-95-4	2.94E-02	24	31.64546	3.7477	0.78439	18.35%	1.13E+00	9.31E-01	1.10E-01	2.31E-02	5.40E-03
EMRS S	EMRS S	Stockpile - Mix of OVB & PAG, high OVB pct. (18 m avg.)	Area	N/A	N/A	N/A	18	N/A	424350	5410746	Manganese and manganese compounds	7439-96-5	1.67E-03	24	31.64546	3.7477	0.78439	18.35%	6.41E-02	5.28E-02	6.25E-03	1.31E-03	3.06E-04
EMRS S	EMRS S	Stockpile - Mix of OVB & PAG, high OVB pct. (18 m avg.)	Area	N/A	N/A	N/A	18	N/A	424350	5410746	Sodium	7440-23-5	3.31E-03	N/A	31.64546	3.7477	0.78439	18.35%	1.27E-01	1.05E-01	1.24E-02	2.60E-03	6.08E-04
EMRS S	EMRS S	Stockpile - Mix of OVB & PAG, high OVB pct. (18 m avg.)	Area	N/A	N/A	N/A	18	N/A	424350	5410746	Nickel and nickel compounds	7440-02-0	1.19E-04	8760	31.64546	3.7477	0.78439	18.35%	4.58E-03	3.77E-03	4.46E-04	9.34E-05	2.19E-05
EMRS S	EMRS S	Stockpile - Mix of OVB & PAG, high OVB pct. (18 m avg.)	Area	N/A	N/A	N/A	18	N/A	424350	5410746	Phosphorus	7723-14-0	8.29E-04	24	31.64546	3.7477	0.78439	18.35%	3.18E-02	2.62E-02	3.11E-03	6.50E-04	1.52E-04
EMRS S	EMRS S	Stockpile - Mix of OVB & PAG, high OVB pct. (18 m avg.)	Area	N/A	N/A	N/A	18	N/A	424350	5410746	Lead and Lead Compounds	7439-92-1	2.25E-04	24	31.64546	3.7477	0.78439	18.35%	8.66E-03	7.13E-03	8.45E-04	1.77E-04	4.14E-05
EMRS S	EMRS S	Stockpile - Mix of OVB & PAG, high OVB pct. (18 m avg.)	Area	N/A	N/A	N/A	18	N/A	424350	5410746	Lead and Lead Compounds	7439-92-1	2.25E-04	720	31.64546	3.7477	0.78439	18.35%	8.66E-03	7.13E-03	8.45E-04	1.77E-04	4.14E-05
EMRS S	EMRS S	Stockpile - Mix of OVB & PAG, high OVB pct. (18 m avg.)	Area	N/A	N/A	N/A	18	N/A	424350	5410746	Rhenium	7440-15-5	5.18E-06	N/A	31.64546	3.7477	0.78439	18.35%	1.99E-04	1.64E-04	1.94E-05	4.06E-06	9.50E-07
EMRS S	EMRS S	Stockpile - Mix of OVB & PAG, high OVB pct. (18 m avg.)	Area	N/A	N/A	N/A	18	N/A	424350	5410746	Scandium	7440-20-2	1.86E-05	N/A	31.64546	3.7477	0.78439	18.35%	7.16E-04	5.90E-04	6.99E-05	1.46E-05	3.42E-06
EMRS S	EMRS S	Stockpile - Mix of OVB & PAG, high OVB pct. (18 m avg.)	Area	N/A	N/A	N/A	18	N/A	424350	5410746	Thorium	7440-29-1	2.07E-05	N/A	31.64546	3.7477	0.78439	18.35%	7.96E-04	6.56E-04	7.76E-05	1.62E-05	3.80E-06
EMRS S	EMRS S	Stockpile - Mix of OVB & PAG, high OVB pct. (18 m avg.)	Area	N/A	N/A	N/A	18	N/A	424350	5410746	Titanium	7440-32-6	4.35E-03	24	31.64546	3.7477	0.78439	18.35%	1.67E-01	1.38E-01	1.63E-02	3.41E-03	7.98E-04
EMRS S	EMRS S	Stockpile - Mix of OVB & PAG, high OVB pct. (18 m avg.)	Area	N/A	N/A	N/A	18	N/A	424350	5410746	Thallium	7440-28-0	1.04E-05	24	31.64546	3.7477	0.78439	18.35%	3.98E-04	3.28E-04	3.88E-05	8.12E-06	1.90E-06
EMRS S	EMRS S	Stockpile - Mix of OVB & PAG, high OVB pct. (18 m avg.)	Area	N/A	N/A	N/A	18	N/A	424350	5410746	Uranium and Uranium Compounds - U in PM10	7440-61-1	2.07E-05	8760	31.64546	3.7477	0.78439	18.35%	7.96E-04	6.56E-04	7.76E-05	1.62E-05	3.80E-06
EMRS S	EMRS S	Stockpile - Mix of OVB & PAG, high OVB pct. (18 m avg.)	Area	N/A	N/A	N/A	18	N/A	424350	5410746	Vanadium	7440-62-2	1.66E-04	24	31.64546	3.7477	0.78439	18.35%	6.36E-03	5.24E-03	6.21E-04	1.30E-04	3.04E-05
EMRS S	EMRS S	Stockpile - Mix of OVB & PAG, high OVB pct. (18 m avg.)	Area	N/A	N/A	N/A	18	N/A	424350	5410746	Zinc	7440-66-6	2.64E-03	24	31.64546	3.7477	0.78439	18.35%	1.01E-01	8.36E-02	9.90E-03	2.07E-03	4.85E-04
EMRS S	EMRS S	Stockpile - Mix of OVB & PAG, high OVB pct. (18 m avg.)	Area	N/A	N/A	N/A	18	N/A	424350	5410746	Zirconium	7440-67-7	2.64E-03	24	31.64546	3.7477	0.78439	18.35%	1.01E-01	8.36E-02	9.90E-03	2.07E-03	4.85E-04
TMA	TMA	Stockpile - Tailings	Area	N/A	N/A	N/A	1.6	N/A	420565	5412900	Aluminum	7429-90-5	3.29E-02	24	15.29619	6.16718	1.56705	89.32%	6.11E-01	5.04E-01	2.03E-01	5.16E-02	2.94E-02
TMA	TMA	Stockpile - Tailings	Area	N/A	N/A	N/A	1.6	N/A	420565	5412900	Arsenic and compounds	7440-38-2	6.58E-05	24	15.29619	6.16718	1.56705	89.32%	1.22E-03	1.01E-03	4.06E-04	1.03E-04	5.88E-05
TMA	TMA	Stockpile - Tailings	Area	N/A	N/A	N/A	1.6	N/A	420565	5412900	Barium - total water soluble	7440-39-3	1.52E-04	24	15.29619	6.16718	1.56705	89.32%	2.82E-03	2.33E-03	9.37E-04	2.38E-04	1.36E-04
TMA	TMA	Stockpile - Tailings	Area	N/A	N/A	N/A	1.6	N/A	420565	5412900	Beryllium and Beryllium Compounds	7440-41-7	9.50E-07	24	15.29619	6.16718	1.56705	89.32%	1.76E-05	1.45E-05	5.86E-06	1.49E-06	8.49E-07
TMA	TMA	Stockpile - Tailings	Area	N/A	N/A	N/A	1.6	N/A	420565	5412900	Calcium carbonate	471-34-1	2.46E-02	24	15.29619	6.16718	1.56705	89.32%	4.56E-01	3.76E-01	1.51E-01	3.85E-02	2.19E-02
TMA	TMA	Stockpile - Tailings	Area	N/A	N/A	N/A	1.6	N/A	420565	5412900	Cadmium and Cadmium Compounds	7440-43-9	8.55E-06	24	15.29619	6.16718	1.56705	89.32%	1.59E-04	1.31E-04	5.27E-05	1.34E-05	7.64E-06
TMA	TMA	Stockpile - Tailings	Area	N/A	N/A	N/A	1.6	N/A	420565	5412900	Cobalt	7440-48-4	2.09E-05	24	15.29619	6.16718	1.56705	89.32%	3.88E-04	3.20E-04	1.29E-04	3.28E-05	1.87E-05
TMA	TMA	Stockpile - Tailings	Area	N/A	N/A	N/A	1.6	N/A	420565	5412900	Chromium compounds (metallic, divalent and trivalent forms)	7440-47-3	1.73E-04	24	15.29619	6.16718	1.56705	89.32%	3.22E-03	2.65E-03	1.07E-03	2.72E-04	1.55E-04
TMA	TMA	Stockpile - Tailings	Area	N/A	N/A	N/A	1.6	N/A	420565	5412900	Cesium	7440-46-2	3.47E-06	N/A	15.29619	6.16718	1.56705	89.32%	6.44E-05	5.30E-05	2.14E-05	5.43E-06	3.10E-06

			Stack Parameters								Contaminant Data				Model Results (µg/m^3 per g/s)				Modelled Concentrations (µg/m^3)				
Source ID	Model ID	Source Description	Source Type	Volumetric Flow Rate (Am^3/s)	Gas Exit Temperature (°C)	Inner Diameter (m)	Height above Grade (m)	Height above Roof (m)	X-Coordinate (m)	Y-Coordinate (m)	Contaminant	CAS RN	Facility-Wide Emission Rate (g/s)	Averaging Period (hrs)	1-Hour Unit Concentration	24-Hour Unit Concentration	30-Day Unit Concentration	Annual Unit Concentration	0.5-Hour POI Concentration	1-Hour POI Concentration	24-Hour POI Concentration	30-Day POI Concentration	Annual POI Concentration
TMA	TMA	Stockpile - Tailings	Area	N/A	N/A	N/A	1.6	N/A	420565	5412900	Iron (metallic)	7439-89-6	3.96E-02	24	15.29619	6.16718	1.56705	89.32%	7.35E-01	6.05E-01	2.44E-01	6.20E-02	3.53E-02
TMA	TMA	Stockpile - Tailings	Area	N/A	N/A	N/A	1.6	N/A	420565	5412900	Gallium	7440-55-3	4.75E-06	N/A	15.29619	6.16718	1.56705	89.32%	8.82E-05	7.27E-05	2.93E-05	7.44E-06	4.24E-06
TMA	TMA	Stockpile - Tailings	Area	N/A	N/A	N/A	1.6	N/A	420565	5412900	Potassium	7440-09-7	9.17E-03	24	15.29619	6.16718	1.56705	89.32%	1.70E-01	1.40E-01	5.65E-02	1.44E-02	8.19E-03
TMA	TMA	Stockpile - Tailings	Area	N/A	N/A	N/A	1.6	N/A	420565	5412900	Lanthanum	7439-91-0	2.19E-05	N/A	15.29619	6.16718	1.56705	89.32%	4.07E-04	3.35E-04	1.35E-04	3.43E-05	1.96E-05
TMA	TMA	Stockpile - Tailings	Area	N/A	N/A	N/A	1.6	N/A	420565	5412900	Magnesium	7439-95-4	1.35E-02	24	15.29619	6.16718	1.56705	89.32%	2.51E-01	2.06E-01	8.32E-02	2.11E-02	1.20E-02
TMA	TMA	Stockpile - Tailings	Area	N/A	N/A	N/A	1.6	N/A	420565	5412900	Manganese and manganese compounds	7439-96-5	7.65E-04	24	15.29619	6.16718	1.56705	89.32%	1.42E-02	1.17E-02	4.72E-03	1.20E-03	6.83E-04
TMA	TMA	Stockpile - Tailings	Area	N/A	N/A	N/A	1.6	N/A	420565	5412900	Sodium	7440-23-5	1.52E-03	N/A	15.29619	6.16718	1.56705	89.32%	2.82E-02	2.33E-02	9.37E-03	2.38E-03	1.36E-03
TMA	TMA	Stockpile - Tailings	Area	N/A	N/A	N/A	1.6	N/A	420565	5412900	Nickel and nickel compounds	7440-02-0	5.46E-05	8760	15.29619	6.16718	1.56705	89.32%	1.01E-03	8.36E-04	3.37E-04	8.56E-05	4.88E-05
TMA	TMA	Stockpile - Tailings	Area	N/A	N/A	N/A	1.6	N/A	420565	5412900	Phosphorus	7723-14-0	3.80E-04	24	15.29619	6.16718	1.56705	89.32%	7.06E-03	5.81E-03	2.34E-03	5.96E-04	3.39E-04
TMA	TMA	Stockpile - Tailings	Area	N/A	N/A	N/A	1.6	N/A	420565	5412900	Lead and Lead Compounds	7439-92-1	1.03E-04	24	15.29619	6.16718	1.56705	89.32%	1.92E-03	1.58E-03	6.37E-04	1.62E-04	9.23E-05
TMA	TMA	Stockpile - Tailings	Area	N/A	N/A	N/A	1.6	N/A	420565	5412900	Lead and Lead Compounds	7439-92-1	1.03E-04	720	15.29619	6.16718	1.56705	89.32%	1.92E-03	1.58E-03	6.37E-04	1.62E-04	9.23E-05
TMA	TMA	Stockpile - Tailings	Area	N/A	N/A	N/A	1.6	N/A	420565	5412900	Rhenium	7440-15-5	2.38E-06	N/A	15.29619	6.16718	1.56705	89.32%	4.41E-05	3.63E-05	1.46E-05	3.72E-06	2.12E-06
TMA	TMA	Stockpile - Tailings	Area	N/A	N/A	N/A	1.6	N/A	420565	5412900	Scandium	7440-20-2	8.55E-06	N/A	15.29619	6.16718	1.56705	89.32%	1.59E-04	1.31E-04	5.27E-05	1.34E-05	7.64E-06
TMA	TMA	Stockpile - Tailings	Area	N/A	N/A	N/A	1.6	N/A	420565	5412900	Thorium	7440-29-1	9.50E-06	N/A	15.29619	6.16718	1.56705	89.32%	1.76E-04	1.45E-04	5.86E-05	1.49E-05	8.49E-06
TMA	TMA	Stockpile - Tailings	Area	N/A	N/A	N/A	1.6	N/A	420565	5412900	Titanium	7440-32-6	2.00E-03	24	15.29619	6.16718	1.56705	89.32%	3.71E-02	3.05E-02	1.23E-02	3.13E-03	1.78E-03
TMA	TMA	Stockpile - Tailings	Area	N/A	N/A	N/A	1.6	N/A	420565	5412900	Thallium	7440-28-0	4.75E-06	24	15.29619	6.16718	1.56705	89.32%	8.82E-05	7.27E-05	2.93E-05	7.44E-06	4.24E-06
TMA	TMA	Stockpile - Tailings	Area	N/A	N/A	N/A	1.6	N/A	420565	5412900	Uranium and Uranium Compounds - U in PM10	7440-61-1	9.50E-06	8760	15.29619	6.16718	1.56705	89.32%	1.76E-04	1.45E-04	5.86E-05	1.49E-05	8.49E-06
TMA	TMA	Stockpile - Tailings	Area	N/A	N/A	N/A	1.6	N/A	420565	5412900	Vanadium	7440-62-2	7.60E-05	24	15.29619	6.16718	1.56705	89.32%	1.41E-03	1.16E-03	4.68E-04	1.19E-04	6.78E-05
TMA	TMA	Stockpile - Tailings	Area	N/A	N/A	N/A	1.6	N/A	420565	5412900	Zinc	7440-66-6	1.21E-03	24	15.29619	6.16718	1.56705	89.32%	2.25E-02	1.85E-02	7.47E-03	1.90E-03	1.08E-03
TMA	TMA	Stockpile - Tailings	Area	N/A	N/A	N/A	1.6	N/A	420565	5412900	Zirconium	7440-67-7	1.21E-03	24	15.29619	6.16718	1.56705	89.32%	2.25E-02	1.85E-02	7.47E-03	1.90E-03	1.08E-03
PIT	PIT	Stockpile - Mix of OVB & NPAG	Area	N/A	N/A	N/A	2	N/A	425279	5410021	Suspended particulate matter	N/A-TSP	2.34E+00	24	52.94894	5.74721	0.85089	26.81%	1.50E+02	1.24E+02	1.34E+01	1.99E+00	6.27E-01
PIT	PIT	Stockpile - Mix of OVB & NPAG	Area	N/A	N/A	N/A	2	N/A	425279	5410021	Aluminum	7429-90-5	1.11E-01	24	52.94894	5.74721	0.85089	26.81%	7.13E+00	5.87E+00	6.38E-01	9.44E-02	2.97E-02
PIT	PIT	Stockpile - Mix of OVB & NPAG	Area	N/A	N/A	N/A	2	N/A	425279	5410021	Arsenic and compounds	7440-38-2	2.22E-04	24	52.94894	5.74721	0.85089	26.81%	1.43E-02	1.17E-02	1.28E-03	1.89E-04	5.95E-05
PIT	PIT	Stockpile - Mix of OVB & NPAG	Area	N/A	N/A	N/A	2	N/A	425279	5410021	Barium - total water soluble	7440-39-3	5.12E-04	24	52.94894	5.74721	0.85089	26.81%	3.29E-02	2.71E-02	2.94E-03	4.36E-04	1.37E-04
PIT	PIT	Stockpile - Mix of OVB & NPAG	Area	N/A	N/A	N/A	2	N/A	425279	5410021	Beryllium and Beryllium Compounds	7440-41-7	3.20E-06	24	52.94894	5.74721	0.85089	26.81%	2.06E-04	1.70E-04	1.84E-05	2.72E-06	8.58E-07
PIT	PIT	Stockpile - Mix of OVB & NPAG	Area	N/A	N/A	N/A	2	N/A	425279	5410021	Calcium carbonate	471-34-1	8.28E-02	24	52.94894	5.74721	0.85089	26.81%	5.32E+00	4.38E+00	4.76E-01	7.04E-02	2.22E-02
PIT	PIT	Stockpile - Mix of OVB & NPAG	Area	N/A	N/A	N/A	2	N/A	425279	5410021	Cadmium and Cadmium Compounds	7440-43-9	2.88E-05	24	52.94894	5.74721	0.85089	26.81%	1.85E-03	1.53E-03	1.66E-04	2.45E-05	7.73E-06
PIT	PIT	Stockpile - Mix of OVB & NPAG	Area	N/A	N/A	N/A	2	N/A	425279	5410021	Cobalt	7440-48-4	7.04E-05	24	52.94894	5.74721	0.85089	26.81%	4.53E-03	3.73E-03	4.05E-04	5.99E-05	1.89E-05
PIT	PIT	Stockpile - Mix of OVB & NPAG	Area	N/A	N/A	N/A	2	N/A	425279	5410021	Chromium compounds (metallic, divalent and trivalent forms)	7440-47-3	5.84E-04	24	52.94894	5.74721	0.85089	26.81%	3.76E-02	3.09E-02	3.36E-03	4.97E-04	1.57E-04
PIT	PIT	Stockpile - Mix of OVB & NPAG	Area	N/A	N/A	N/A	2	N/A	425279	5410021	Cesium	7440-46-2	1.17E-05	N/A	52.94894	5.74721	0.85089	26.81%	7.51E-04	6.19E-04	6.72E-05	9.94E-06	3.13E-06
PIT	PIT	Stockpile - Mix of OVB & NPAG	Area	N/A	N/A	N/A	2	N/A	425279	5410021	Iron (metallic)	7439-89-6	1.33E-01	24	52.94894	5.74721	0.85089	26.81%	8.57E+00	7.06E+00	7.66E-01	1.13E-01	3.58E-02
PIT	PIT	Stockpile - Mix of OVB & NPAG	Area	N/A	N/A	N/A	2	N/A	425279	5410021	Gallium	7440-55-3	1.60E-05	N/A	52.94894	5.74721	0.85089	26.81%	1.03E-03	8.48E-04	9.20E-05	1.36E-05	4.29E-06
PIT	PIT	Stockpile - Mix of OVB & NPAG	Area	N/A	N/A	N/A	2	N/A	425279	5410021	Potassium	7440-09-7	3.09E-02	24	52.94894	5.74721	0.85089	26.81%	1.99E+00	1.64E+00	1.78E-01	2.63E-02	8.28E-03
PIT	PIT	Stockpile - Mix of OVB & NPAG	Area	N/A	N/A	N/A	2	N/A	425279	5410021	Lanthanum	7439-91-0	7.38E-05	N/A	52.94894	5.74721	0.85089	26.81%	4.74E-03	3.91E-03	4.24E-04	6.28E-05	1.98E-05
PIT	PIT	Stockpile - Mix of OVB & NPAG	Area	N/A	N/A	N/A	2	N/A	425279	5410021	Magnesium	7439-95-4	4.55E-02	24	52.94894	5.74721	0.85089	26.81%	2.92E+00	2.41E+00	2.61E-01	3.87E-02	1.22E-02
PIT	PIT	Stockpile - Mix of OVB & NPAG	Area	N/A	N/A	N/A	2	N/A	425279	5410021	Manganese and manganese compounds	7439-96-5	2.58E-03	24	52.94894	5.74721	0.85089	26.81%	1.66E-01	1.36E-01	1.48E-02	2.19E-03	6.91E-04
PIT	PIT	Stockpile - Mix of OVB & NPAG	Area	N/A	N/A	N/A	2	N/A	425279	5410021	Sodium	7440-23-5	5.12E-03	N/A	52.94894	5.74721	0.85089	26.81%	3.29E-01	2.71E-01	2.94E-02	4.36E-03	1.37E-03
PIT	PIT	Stockpile - Mix of OVB & NPAG	Area	N/A	N/A	N/A	2	N/A	425279	5410021	Nickel and nickel compounds	7440-02-0	1.84E-04	8760	52.94894	5.74721	0.85089	26.81%	1.18E-02	9.75E-03	1.06E-03	1.57E-04	4.94E-05
PIT	PIT	Stockpile - Mix of OVB & NPAG	Area	N/A	N/A	N/A	2	N/A	425279	5410021	Phosphorus	7723-14-0	1.28E-03	24	52.94894	5.74721	0.85089	26.81%	8.23E-02	6.78E-02	7.36E-03	1.09E-03	3.43E-04
PIT	PIT	Stockpile - Mix of OVB & NPAG	Area	N/A	N/A	N/A	2	N/A	425279	5410021	Lead and Lead Compounds	7439-92-1	3.48E-04	24	52.94894	5.74721	0.85089	26.81%	2.24E-02	1.84E-02	2.00E-03	2.96E-04	9.34E-05
PIT	PIT	Stockpile - Mix of OVB & NPAG	Area	N/A	N/A	N/A	2	N/A	425279	5410021	Lead and Lead Compounds	7439-92-1	3.48E-04	720	52.94894	5.74721	0.85089	26.81%	2.24E-02	1.84E-02	2.00E-03	2.96E-04	9.34E-05
PIT	PIT	Stockpile - Mix of OVB & NPAG	Area	N/A	N/A	N/A	2	N/A	425279	5410021	Rhenium	7440-15-5	8.00E-06	N/A	52.94894	5.74721	0.85089	26.81%	5.15E-04	4.24E-04	4.60E-05	6.81E-06	2.15E-06
PIT	PIT	Stockpile - Mix of OVB & NPAG	Area	N/A	N/A	N/A	2	N/A	425279	5410021	Scandium	7440-20-2	2.88E-05	N/A	52.94894	5.74721	0.85089	26.81%	1.85E-03	1.53E-03	1.66E-04	2.45E-05	7.73E-06
PIT	PIT	Stockpile - Mix of OVB & NPAG	Area	N/A	N/A	N/A	2	N/A	425279	5410021	Thorium	7440-29-1	3.20E-05	N/A	52.94894	5.74721	0.85089	26.81%	2.06E-03	1.70E-03	1.84E-04	2.72E-05	8.58E-06
PIT	PIT	Stockpile - Mix of OVB & NPAG	Area	N/A	N/A	N/A	2	N/A	425279	5410021	Titanium	7440-32-6	6.72E-03	24	52.94894	5.74721	0.85089	26.81%	4.32E-01	3.56E-01	3.86E-02	5.72E-03	1.80E-03
PIT	PIT	Stockpile - Mix of OVB & NPAG	Area	N/A	N/A	N/A	2	N/A	425279	5410021	Thallium	7440-28-0	1.60E-05	24	52.94894	5.74721	0.85089	26.81%	1.03E-03	8.48E-04	9.20E-05	1.36E-05	4.29E-06
PIT	PIT	Stockpile - Mix of OVB & NPAG	Area	N/A	N/A	N/A	2	N/A	425279	5410021	Uranium and Uranium Compounds - U in PM10	7440-61-1	3.20E-05	8760	52.94894	5.74721	0.85089	26.81%	2.06E-03	1.70E-03	1.84E-04	2.72E-05	8.58E-06
PIT	PIT	Stockpile - Mix of OVB & NPAG	Area	N/A	N/A	N/A	2	N/A	425279	5410021	Vanadium	7440-62-2	2.56E-04	24	52.94894	5.74721	0.85089	26.81%	1.65E-02	1.36E-02	1.47E-03	2.18E-04	6.86E-05
PIT	PIT	Stockpile - Mix of OVB & NPAG	Area	N/A	N/A	N/A	2	N/A	425279	5410021	Zinc	7440-66-6	4.08E-03	24	52.94894	5.74721	0.85089	26.81%	2.62E-01	2.16E-01	2.35E-02	3.47E-03	1.09E-03
PIT	PIT	Stockpile - Mix of OVB & NPAG	Area	N/A	N/A	N/A	2	N/A	425279	5410021	Zirconium	7440-67-7	4.08E-03	24	52.94894	5.74721	0.85089	26.81%	2.62E-01	2.16E-01	2.35E-02	3.47E-03	1.09E-03

Notes:

EF	Emission Factor
MB	Mass Balance
EC	Engineering Calculation
H	Highest Quality
AA	Above Average
A	Average
M	Marginal/Uncertain

Emission Summary and Dispersion Modelling Report
New Gold - Rainy River Mine
AERMOD

Source ID	1-Hour Unit Concentration (µg/m^3 per g/s)	24-Hour Unit Concentration (µg/m^3 per g/s)	Monthly Unit Concentration (µg/m^3 per g/s)	Annual Unit Concentration (µg/m^3 per g/s)
PIT	52.949	5.747	0.851	0.268
WMRS	57.394	8.706	1.922	0.481
EMRS S	31.645	3.748	0.784	0.184
LEACH1		3.550		
LEACH2		3.623		
LEACH3		3.632		
LEACH4		3.596		
LEACH5		3.479		
LEACH6		3.662		
LEACH7		3.665		
LEACH8		3.529		
TMA	15.296	6.167	1.567	0.893
CONST_HR		4.691		
INPIT_HR		3.140		
NPAG_HR		6.775		
LG&PAG_HR		4.530		
MOBI_CRUSH		4.102		
PAG_HR		4.803		
HCND1	40.893	3.712		
HCND2	37.016	3.479		
PORT1	44.769	2.031		
PORT2	44.769	2.031		
DC6		1.806		
EF5		1.874		
E_OUTCRUSH	34.354	4.729		
BLAST	56.102	5.761		
WPs	74.723	5.852		
UNLOAD NPAG		12.022		
UNLOAD OB		4.544		
LGO		3.489	0.598	0.246
OC1		3.877	0.605	0.268
SPACEHEAT1		1.520		

PROJECT TITLE:

New Gold Rainy River Mine
ESDM Update

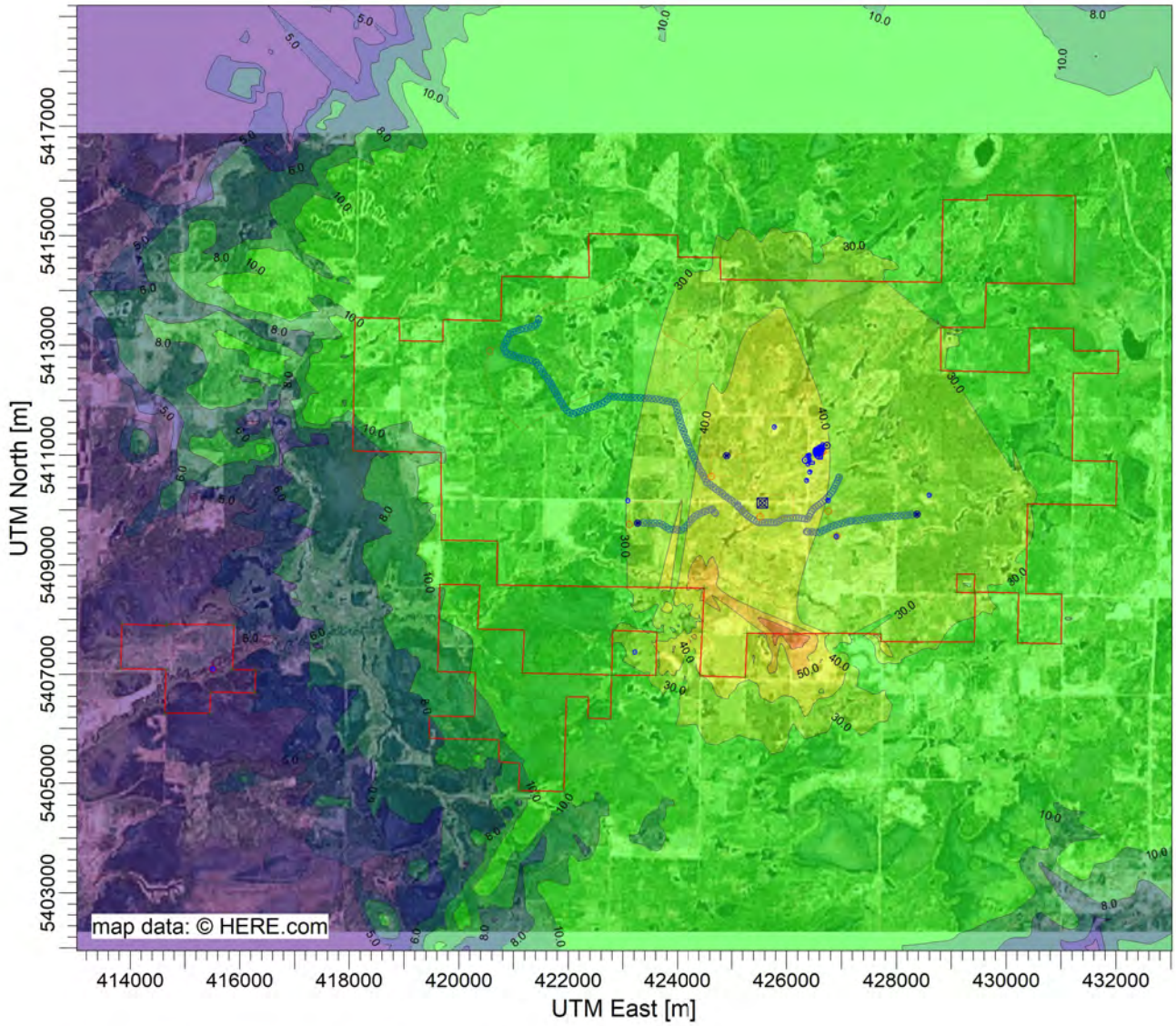

PLOT FILE OF HIGH 1ST HIGH 1-HR VALUES FOR SOURCE GROUP: BLAST

ug/m^3

Max: 68.0 [ug/m^3] at (426068.33, 5407739.80)

1.2 5.0 6.0 8.0 10.0 30.0 40.0 50.0 60.0 68.0

COMMENTS:	SOURCES:	COMPANY NAME:	
	30	**Trinity Consultants Ontario**	
	RECEPTORS:	MODELER:	
	8294	**Caleb Stuckless**	
	OUTPUT TYPE:	SCALE: 1:125,679	
	Concentration	0 4 km	
	MAX:	DATE:	PROJECT NO.:
	68.0 ug/m^3	**2021-03-13**	

PROJECT TITLE:

New Gold Rainy River Mine
ESDM Update

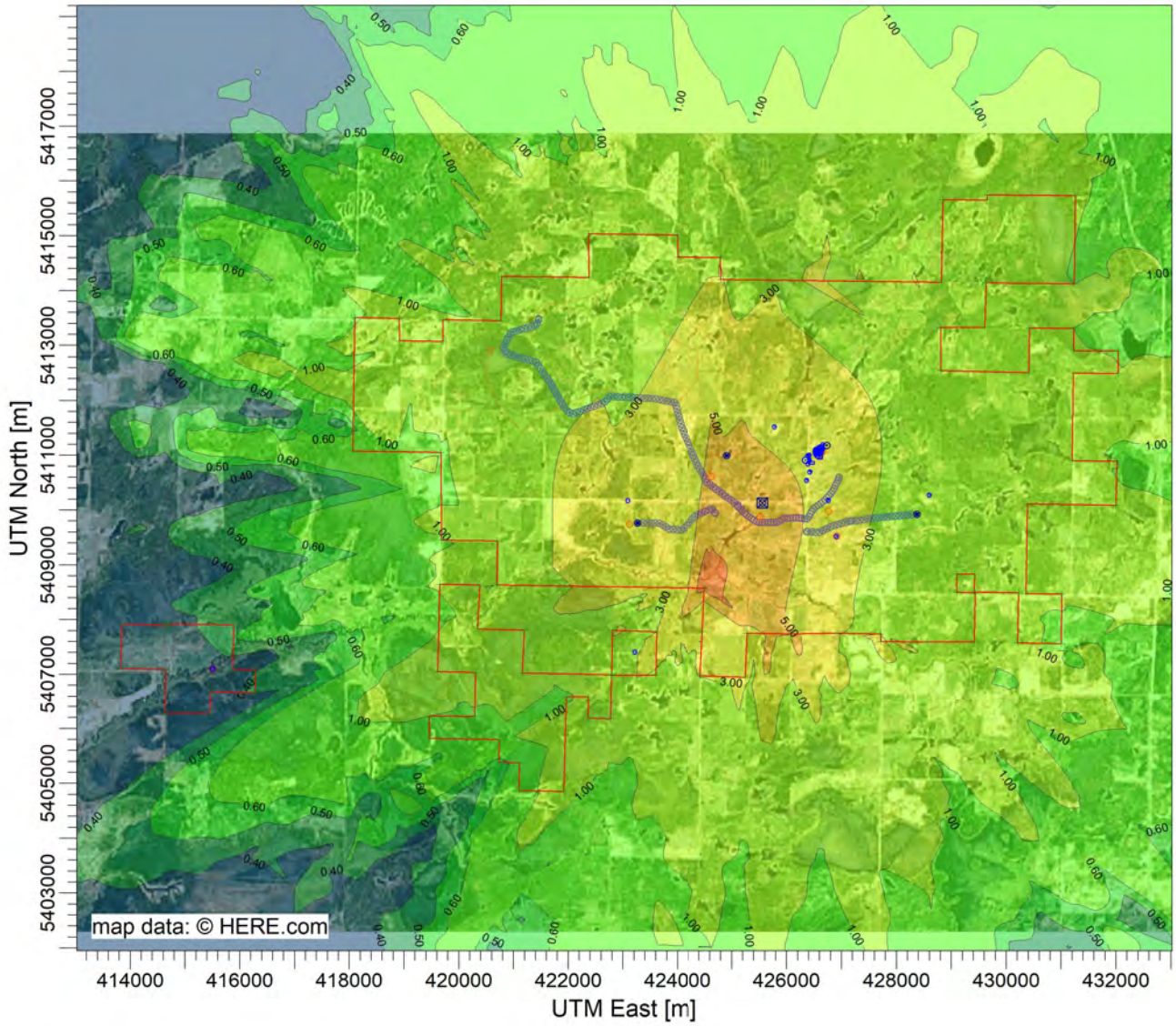

PLOT FILE OF HIGH 1ST HIGH 24-HR VALUES FOR SOURCE GROUP: BLAST

ug/m^3

Max: 7.61 [ug/m^3] at (424480.00, 5408573.00)

0.09 0.10 0.20 0.40 0.50 0.60 1.00 3.00 5.00 7.00 7.61

COMMENTS:	SOURCES:	COMPANY NAME:	
	30	**Trinity Consultants Ontario**	
	RECEPTORS:	MODELER:	
	8294	**Caleb Stuckless**	
	OUTPUT TYPE:	SCALE: 1:125,679	
	Concentration	0 4 km	
	MAX:	DATE:	PROJECT NO.:
	7.61 ug/m^3	**2021-03-13**	

PROJECT TITLE:

New Gold Rainy River Mine
ESDM Update

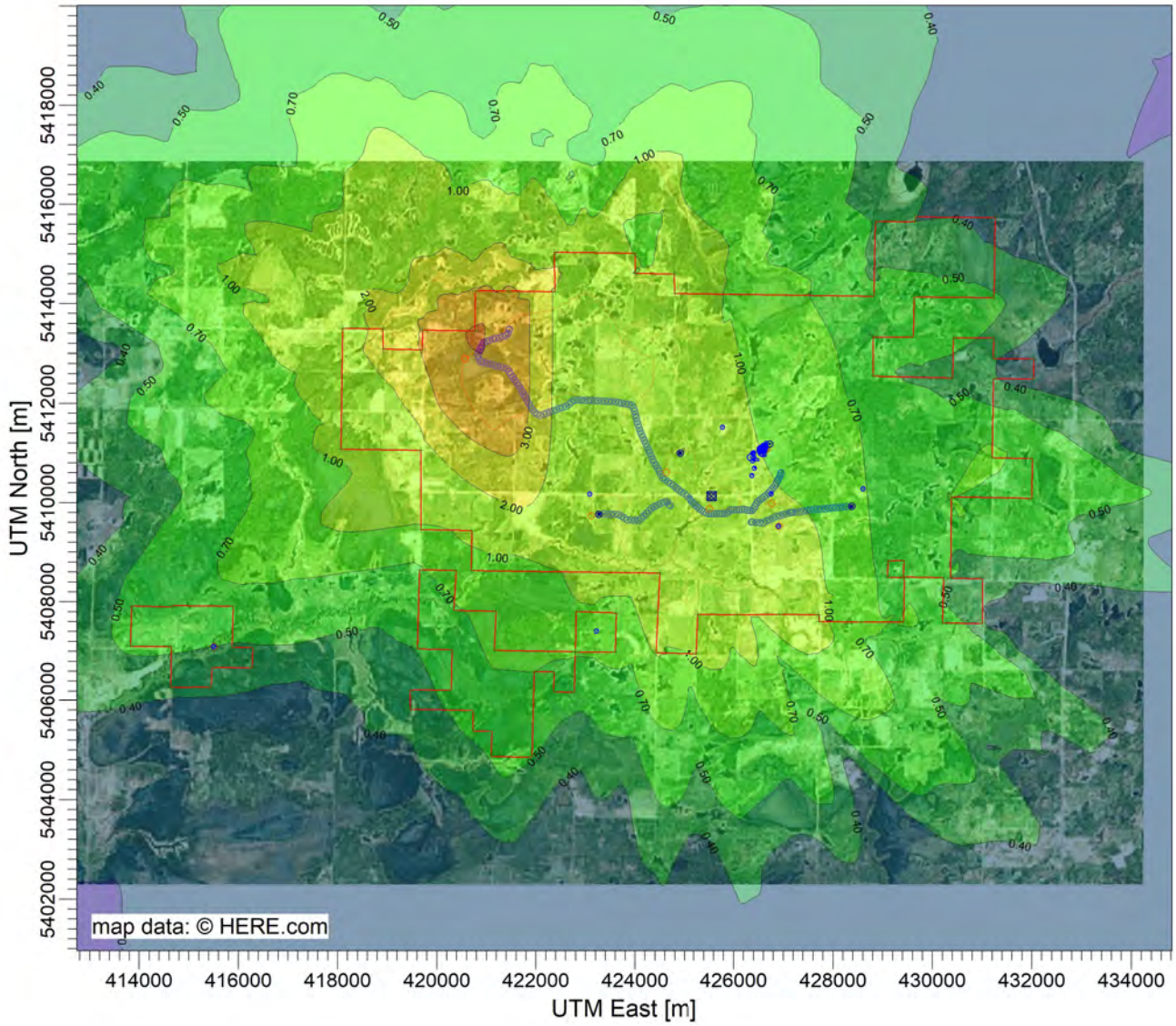

PLOT FILE OF HIGH 1ST HIGH 24-HR VALUES FOR SOURCE GROUP: CONST_HR ug/m^3

Max: 5.44 [ug/m^3] at (420766.99, 5413450.09)

0.09 0.10 0.20 0.40 0.50 0.70 1.00 2.00 3.00 5.00 5.44

COMMENTS:	SOURCES:	COMPANY NAME:	
	30	**Trinity Consultants Ontario**	
	RECEPTORS:	MODELER:	
	8294	**Caleb Stuckless**	
	OUTPUT TYPE:	SCALE: 1:138,753	
	Concentration	0 5 km	
	MAX:	DATE:	PROJECT NO.:
	5.44 ug/m^3	**2021-03-13**	

PROJECT TITLE:

New Gold Rainy River Mine
ESDM Update

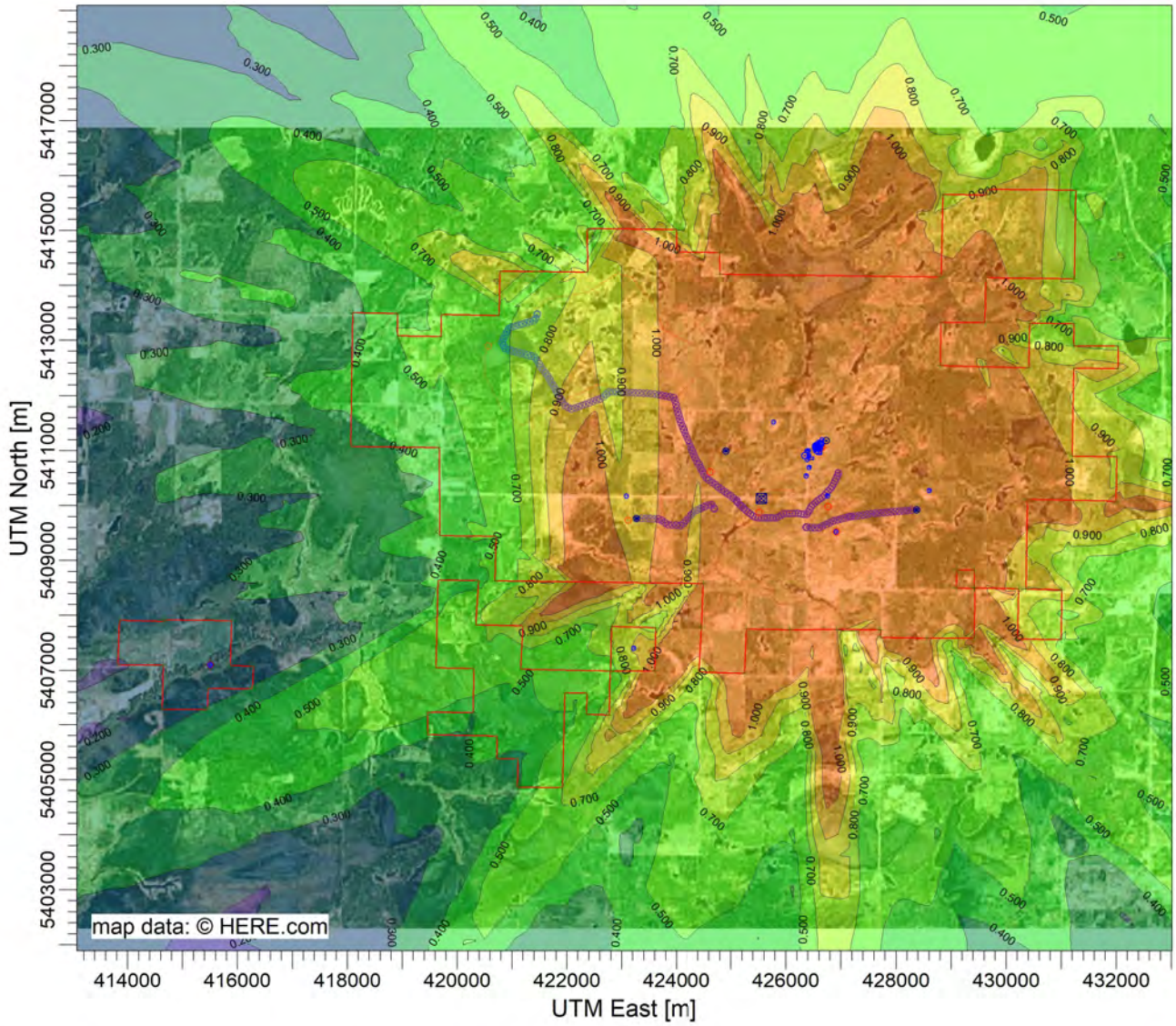

PLOT FILE OF HIGH 1ST HIGH 24-HR VALUES FOR SOURCE GROUP: DC6 ug/m^3

Max: 1.903 [ug/m^3] at (427128.00, 5414193.00)

0.098 0.100 0.200 0.300 0.400 0.500 0.700 0.800 0.900 1.000 1.903

COMMENTS:	SOURCES:	COMPANY NAME:	
	30	**Trinity Consultants Ontario**	
	RECEPTORS:	MODELER:	
	8294	**Caleb Stuckless**	
	OUTPUT TYPE:	SCALE: 1:125,312	
	Concentration	0 4 km	
	MAX:	DATE:	PROJECT NO.:
	1.903 ug/m^3	**2021-03-13**	

PROJECT TITLE:

New Gold Rainy River Mine
ESDM Update

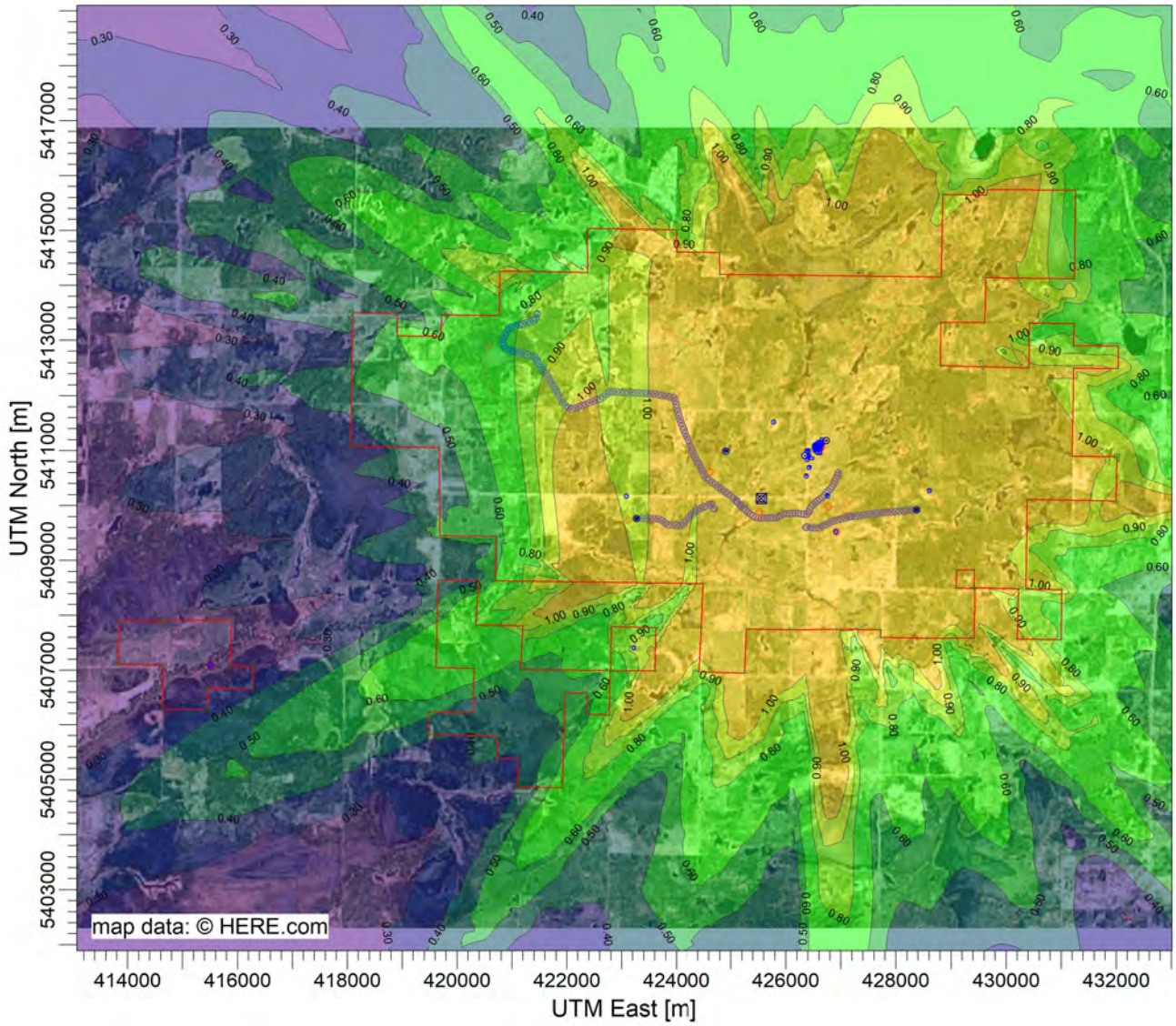

PLOT FILE OF HIGH 1ST HIGH 24-HR VALUES FOR SOURCE GROUP: EF5 ug/m^3

Max: 2.01 [ug/m^3] at (427330.00, 5414223.00)

0.10 0.30 0.40 0.50 0.60 0.80 0.90 1.00 2.00 2.01

COMMENTS:	SOURCES:	COMPANY NAME:	
	30	**Trinity Consultants Ontario**	
	RECEPTORS:	MODELER:	
	8294	**Caleb Stuckless**	
	OUTPUT TYPE:	SCALE: 1:125,323	
	Concentration	0 4 km	
	MAX:	DATE:	PROJECT NO.:
	2.01 ug/m^3	**2021-03-13**	

PROJECT TITLE:

New Gold Rainy River Mine
ESDM Update

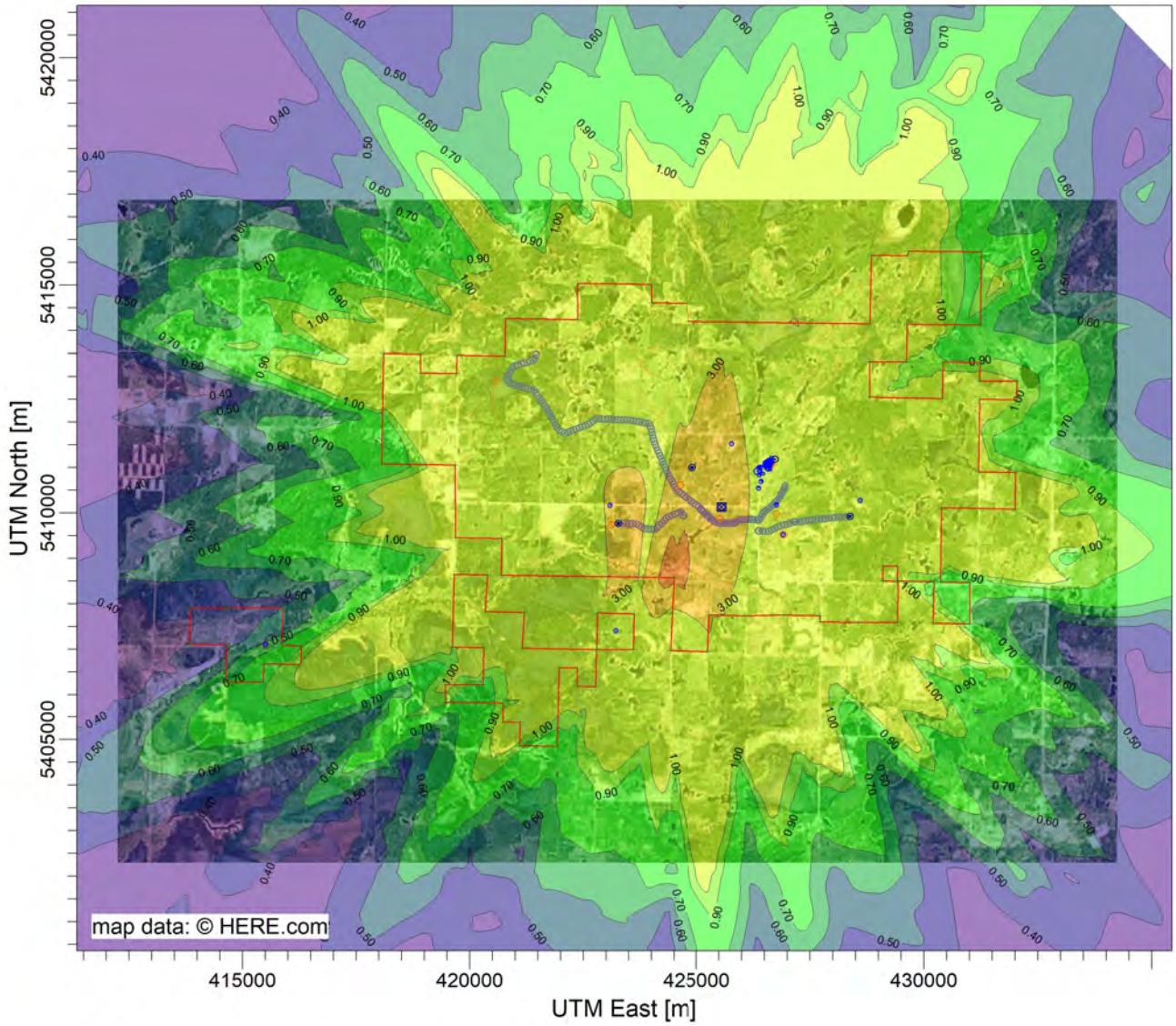

PLOT FILE OF HIGH 1ST HIGH 24-HR VALUES FOR SOURCE GROUP: EMRSS

ug/m^3

Max: 4.43 [ug/m^3] at (424380.00, 5408573.00)

0.15 0.40 0.50 0.60 0.70 0.90 1.00 3.00 4.00 4.43

COMMENTS:	SOURCES:	COMPANY NAME:	
	30	**Trinity Consultants Ontario**	
	RECEPTORS:	MODELER:	
	8294	**Caleb Stuckless**	
	OUTPUT TYPE:	SCALE: 1:151,430	
	Concentration	0 5 km	
	MAX:	DATE:	PROJECT NO.:
	4.43 ug/m^3	**2021-03-13**	

PROJECT TITLE:

New Gold Rainy River Mine
ESDM Update

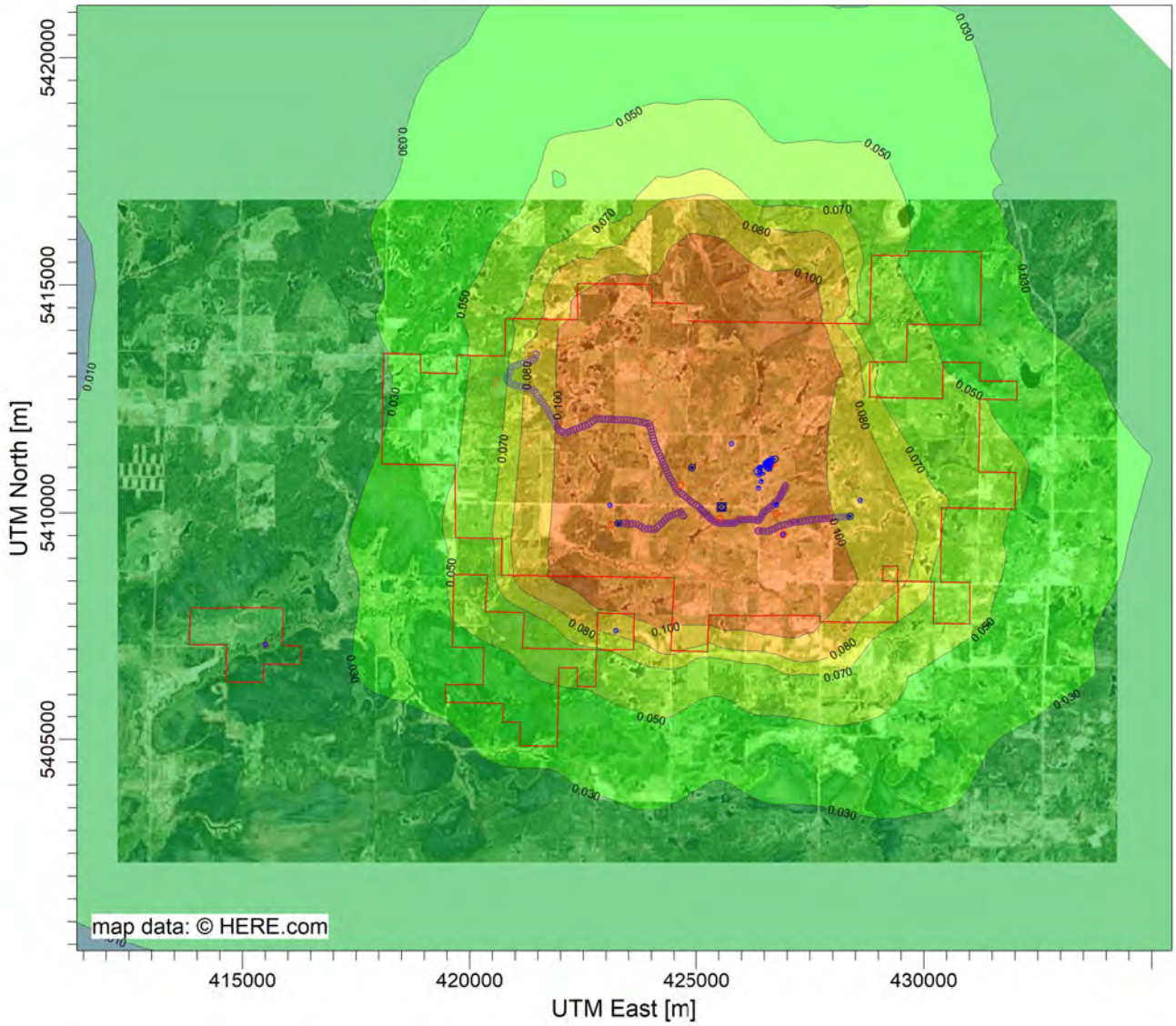

PLOT FILE OF ANNUAL VALUES AVERAGED ACROSS 5 YEARS FOR SOURCE GROUP: EMRSS ug/m^3

Max: 0.184 [ug/m^3] at (424498.55, 5408579.22)

COMMENTS:	SOURCES:	COMPANY NAME:	
	30	**Trinity Consultants Ontario**	
	RECEPTORS:	MODELER:	
	8294	**Caleb Stuckless**	
	OUTPUT TYPE:	SCALE: 1:151,416	
	Concentration	0 5 km	
	MAX:	DATE:	PROJECT NO.:
	0.184 ug/m^3	**2021-03-13**	

PROJECT TITLE:

New Gold Rainy River Mine
ESDM Update

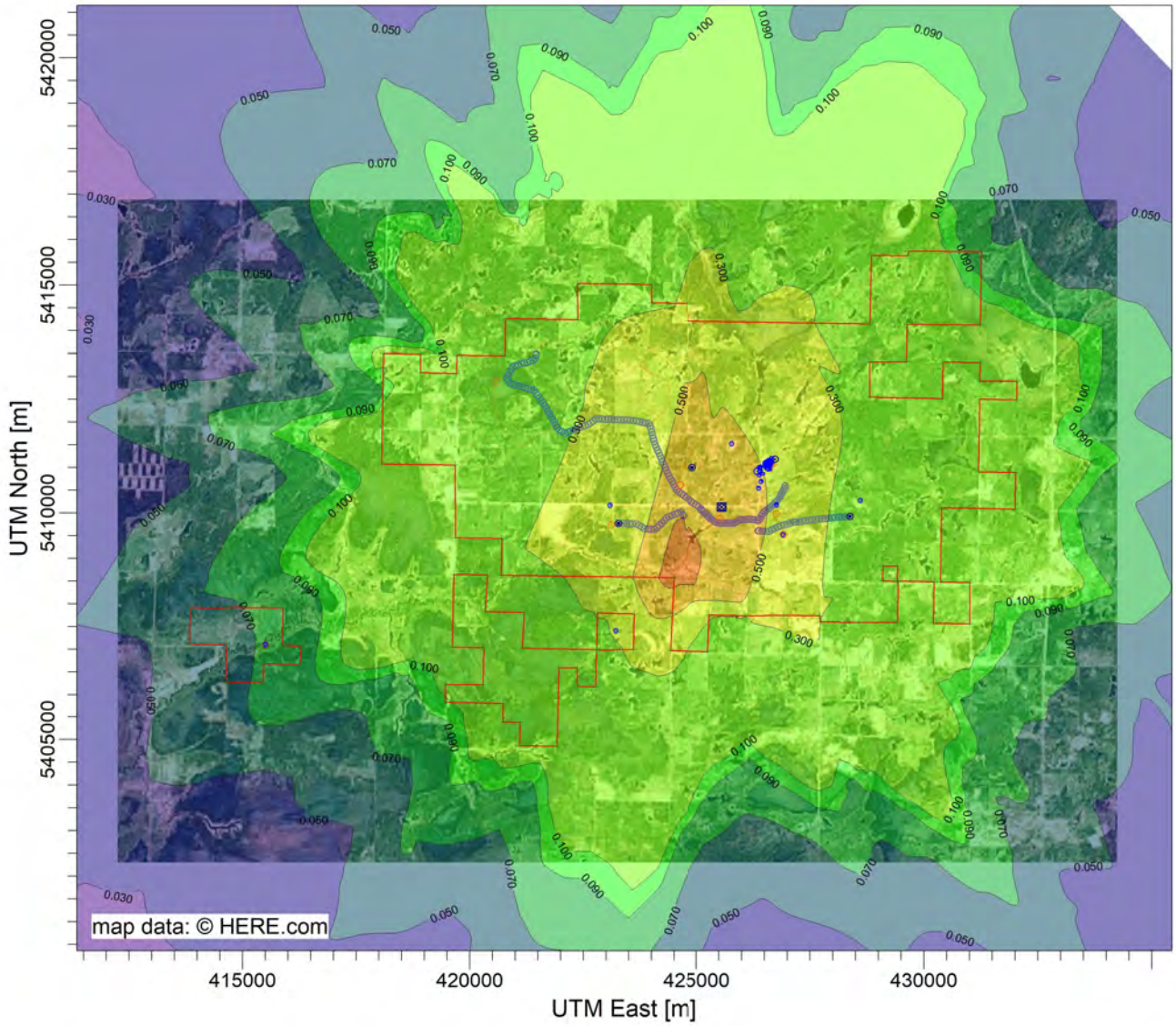

PLOT FILE OF HIGH 1ST HIGH MONTH VALUES FOR SOURCE GROUP: EMRSS

ug/m^3

Max: 0.784 [ug/m^3] at (424498.55, 5408579.22)

0.015 0.030 0.050 0.070 0.090 0.100 0.300 0.500 0.700 0.784

COMMENTS:	SOURCES:	COMPANY NAME:	
	30	**Trinity Consultants Ontario**	
	RECEPTORS:	MODELER:	
	8294	**Caleb Stuckless**	
	OUTPUT TYPE:	SCALE: 1:151,416	
	Concentration	0 5 km	
	MAX:	DATE:	PROJECT NO.:
	0.784 ug/m^3	**2021-03-13**	

PROJECT TITLE:

New Gold Rainy River Mine
ESDM Update

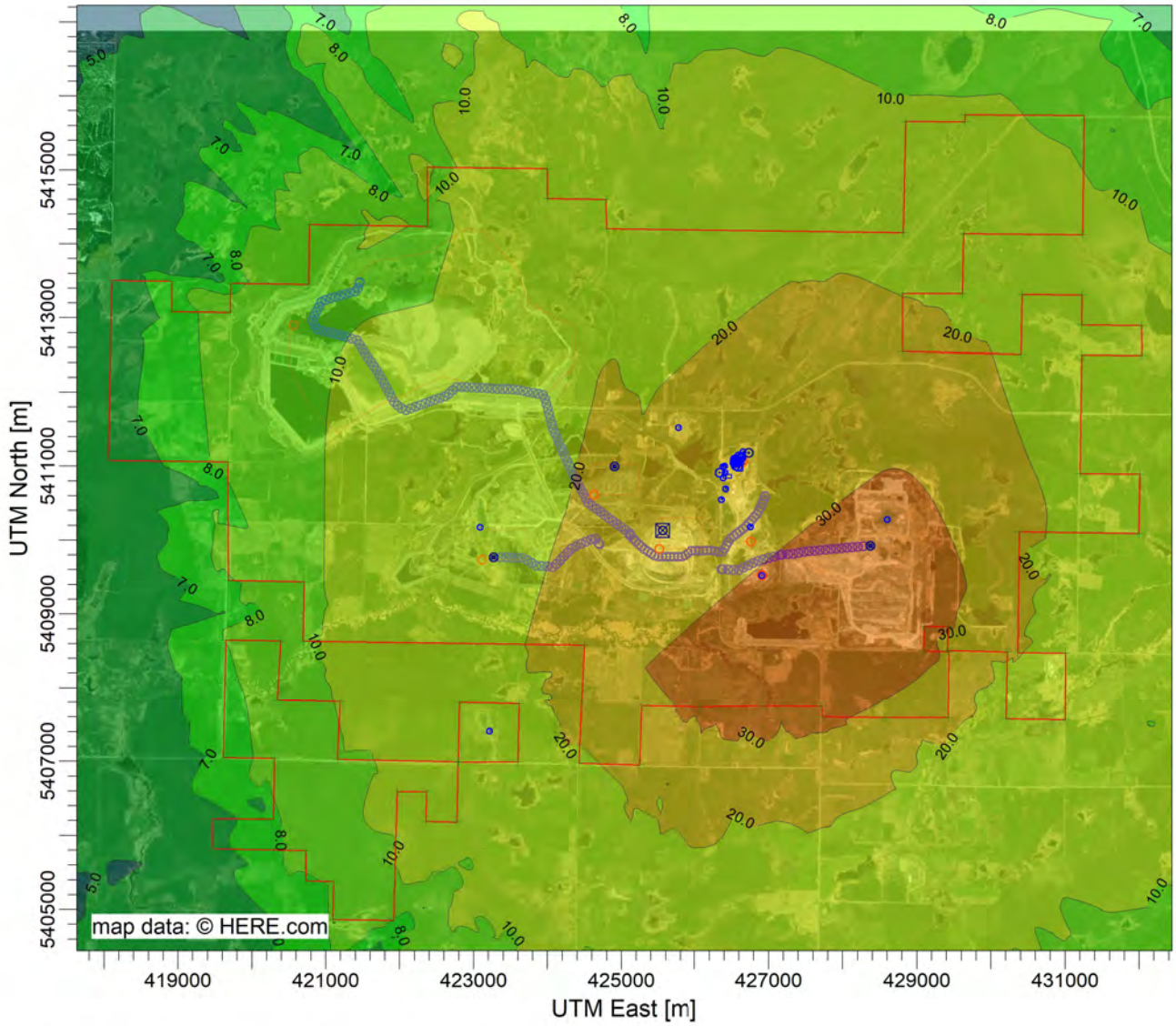

PLOT FILE OF HIGH 1ST HIGH 1-HR VALUES FOR SOURCE GROUP: EOUTCR

ug/m^3

Max: 37.8 [ug/m^3] at (429101.68, 5408830.13)

1.4 3.0 4.0 5.0 7.0 8.0 10.0 20.0 30.0 37.8

COMMENTS:	SOURCES:	COMPANY NAME:	
	30	**Trinity Consultants Ontario**	
	RECEPTORS:	MODELER:	
	8294	**Caleb Stuckless**	
	OUTPUT TYPE:	SCALE: 1:93,091	
	Concentration	0 3 km	
	MAX:	DATE:	PROJECT NO.:
	37.8 ug/m^3	**2021-03-24**	

PROJECT TITLE:

New Gold Rainy River Mine
ESDM Update

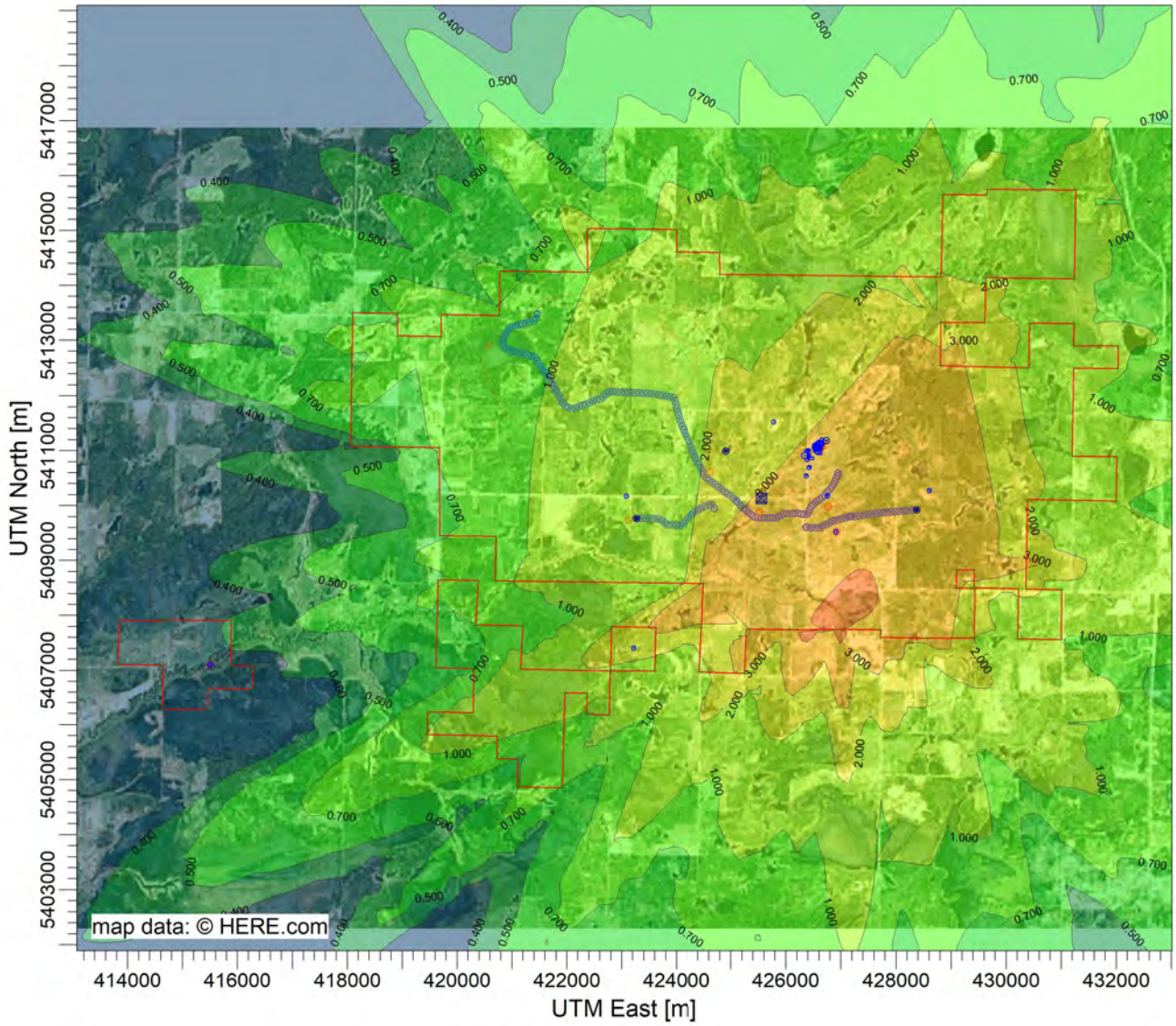

PLOT FILE OF HIGH 1ST HIGH 24-HR VALUES FOR SOURCE GROUP: EOUTCR

ug/m^3

Max: 5.670 [ug/m^3] at (426976.16, 5407714.00)

0.098 0.100 0.200 0.400 0.500 0.700 1.000 2.000 3.000 5.000 5.670

COMMENTS:	SOURCES:	COMPANY NAME:	
	30	**Trinity Consultants Ontario**	
	RECEPTORS:	MODELER:	
	8294	**Caleb Stuckless**	
	OUTPUT TYPE:	SCALE: 1:125,312	
	Concentration	0 4 km	
	MAX:	DATE:	PROJECT NO.:
	5.670 ug/m^3	**2021-03-13**	

PROJECT TITLE:

New Gold Rainy River Mine
ESDM Update

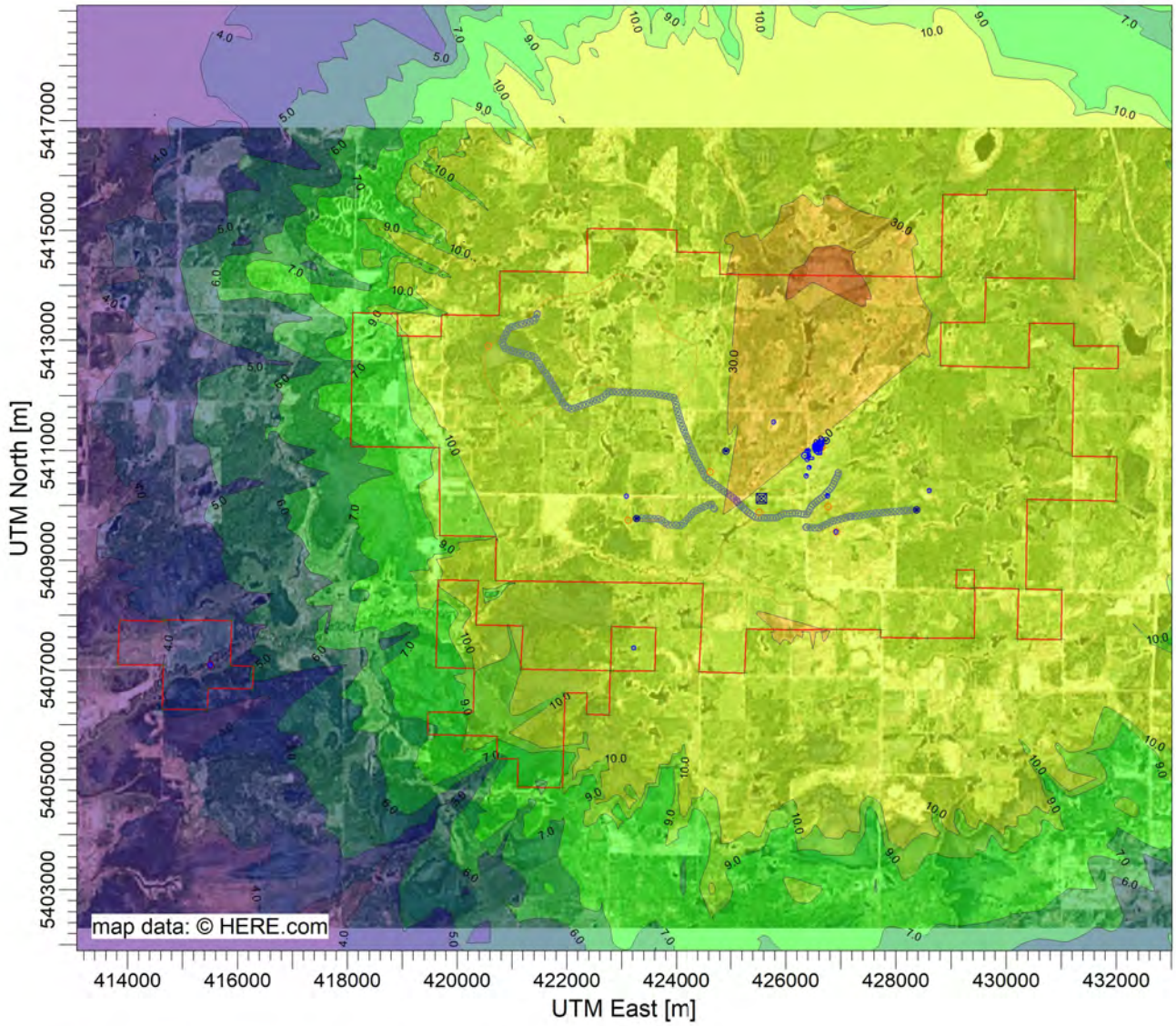

PLOT FILE OF HIGH 1ST HIGH 1-HR VALUES FOR SOURCE GROUP: HCND1 ug/m^3

Max: 46.4 [ug/m^3] at (426728.00, 5414193.00)

1.3 4.0 5.0 6.0 7.0 9.0 10.0 30.0 40.0 46.4

COMMENTS:	SOURCES:	COMPANY NAME:	
	30	**Trinity Consultants Ontario**	
	RECEPTORS:	MODELER:	
	8294	**Caleb Stuckless**	
	OUTPUT TYPE:	SCALE: 1:125,323	
	Concentration	0 4 km	
	MAX:	DATE:	PROJECT NO.:
	46.4 ug/m^3	**2021-03-13**	

PROJECT TITLE:

New Gold Rainy River Mine
ESDM Update

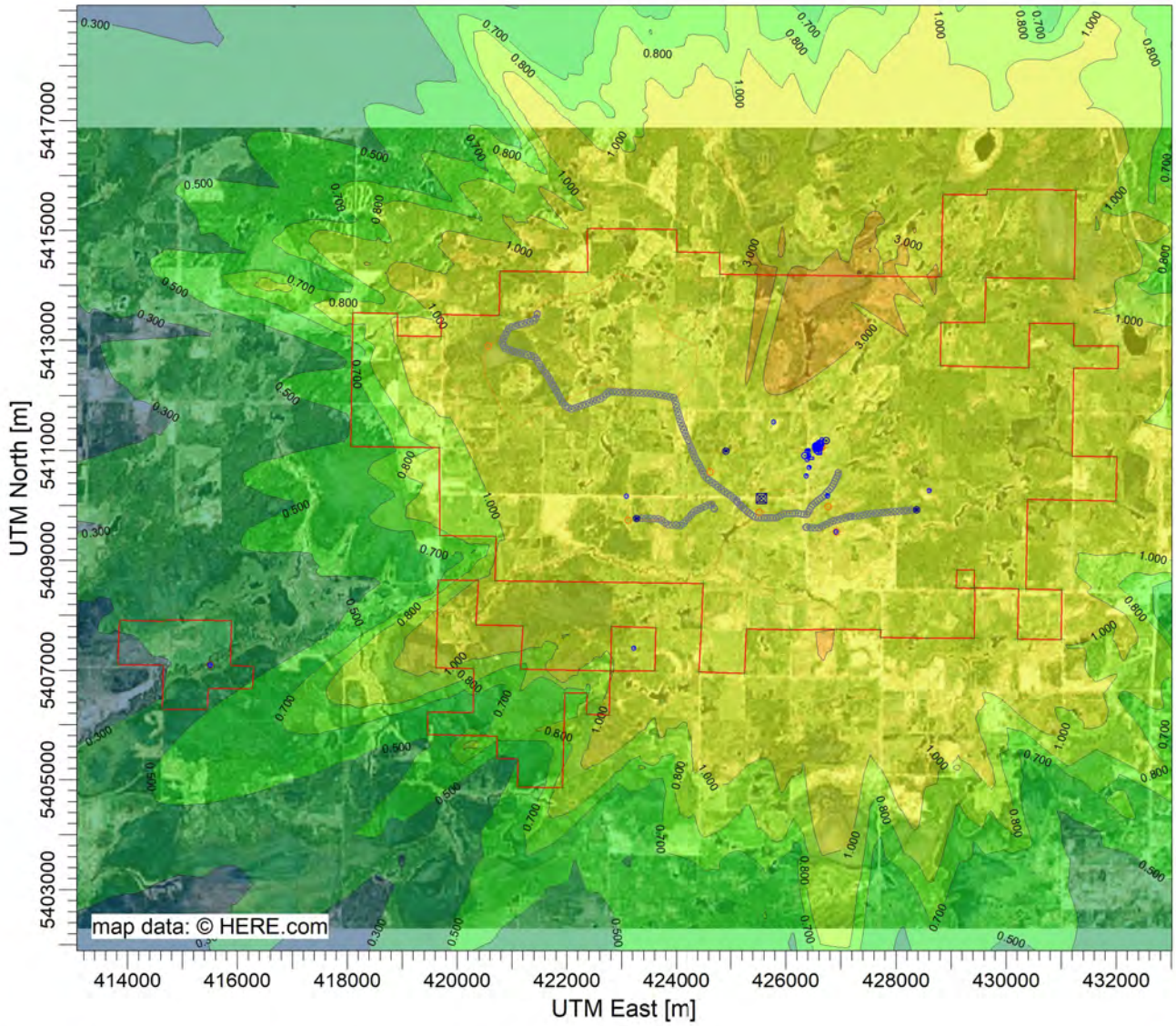

PLOT FILE OF HIGH 1ST HIGH 24-HR VALUES FOR SOURCE GROUP: HCND1 ug/m^3

Max: 4.142 [ug/m^3] at (427330.00, 5414223.00)

0.098 0.100 0.200 0.300 0.500 0.700 0.800 1.000 3.000 4.000 4.142

COMMENTS:	SOURCES:	COMPANY NAME:	
	30	**Trinity Consultants Ontario**	
	RECEPTORS:	MODELER:	
	8294	**Caleb Stuckless**	
	OUTPUT TYPE:	SCALE: 1:125,312	
	Concentration	0 4 km	
	MAX:	DATE:	PROJECT NO.:
	4.142 ug/m^3	**2021-03-13**	

PROJECT TITLE:

New Gold Rainy River Mine
ESDM Update

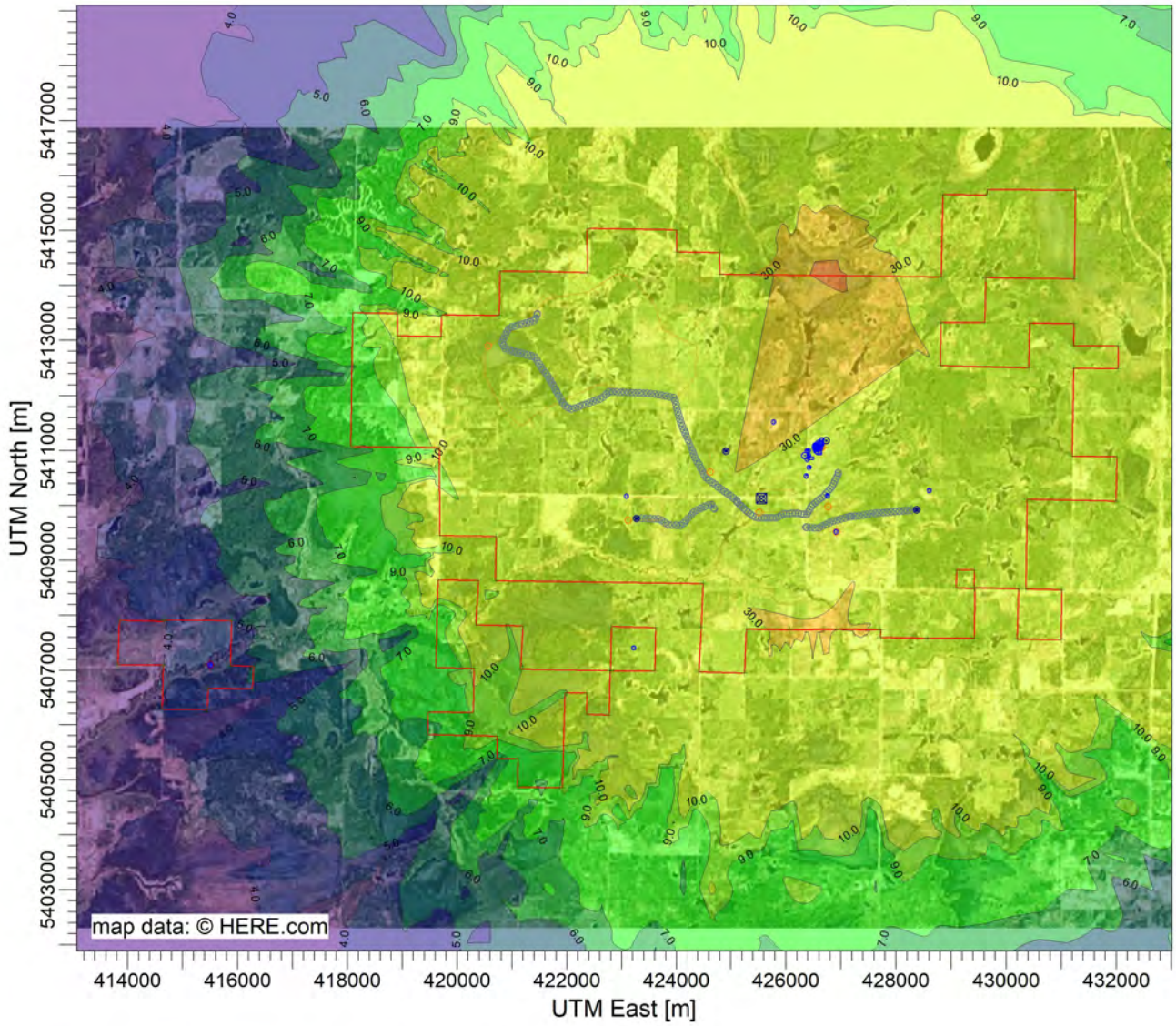

PLOT FILE OF HIGH 1ST HIGH 1-HR VALUES FOR SOURCE GROUP: HCND2 ug/m^3

Max: 42.6 [ug/m^3] at (426728.00, 5414193.00)

1.3 4.0 5.0 6.0 7.0 9.0 10.0 30.0 40.0 42.6

COMMENTS:	SOURCES: **30**	COMPANY NAME: **Trinity Consultants Ontario**	
	RECEPTORS: **8294**	MODELER: **Caleb Stuckless**	Trinity Consultants
	OUTPUT TYPE: **Concentration**	SCALE: 1:125,323 0 4 km	
	MAX: **42.6 ug/m^3**	DATE: **2021-03-13**	PROJECT NO.:

PROJECT TITLE:

New Gold Rainy River Mine
ESDM Update

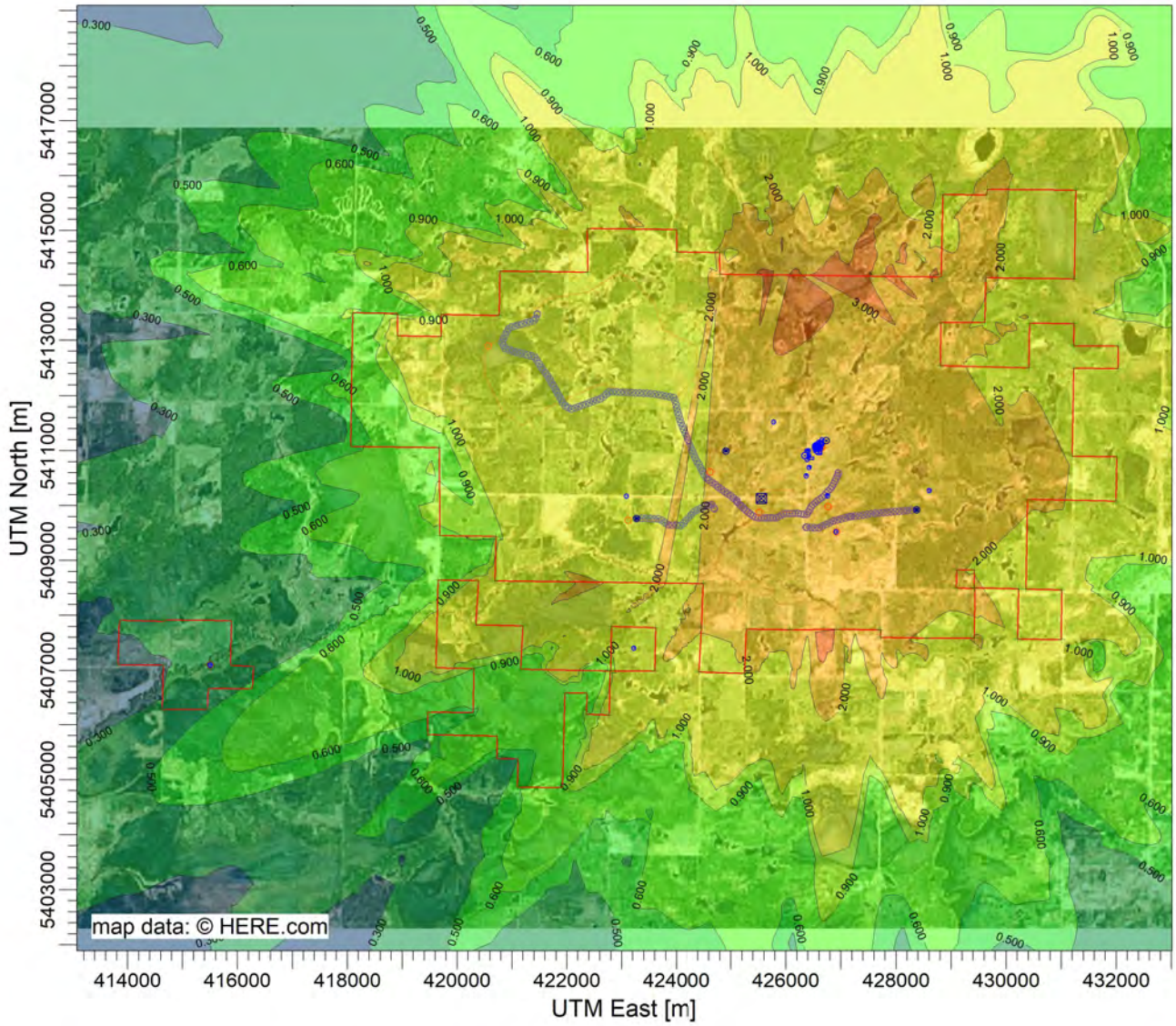

PLOT FILE OF HIGH 1ST HIGH 24-HR VALUES FOR SOURCE GROUP: HCND2 ug/m^3

Max: 3.934 [ug/m^3] at (427330.00, 5414223.00)

0.099 0.100 0.200 0.300 0.500 0.600 0.900 1.000 2.000 3.000 3.934

COMMENTS:	SOURCES:	COMPANY NAME:	
	30	**Trinity Consultants Ontario**	
	RECEPTORS:	MODELER:	
	8294	**Caleb Stuckless**	
	OUTPUT TYPE:	SCALE: 1:125,312	
	Concentration	0 4 km	
	MAX:	DATE:	PROJECT NO.:
	3.934 ug/m^3	**2021-03-13**	

PROJECT TITLE:

New Gold Rainy River Mine
ESDM Update

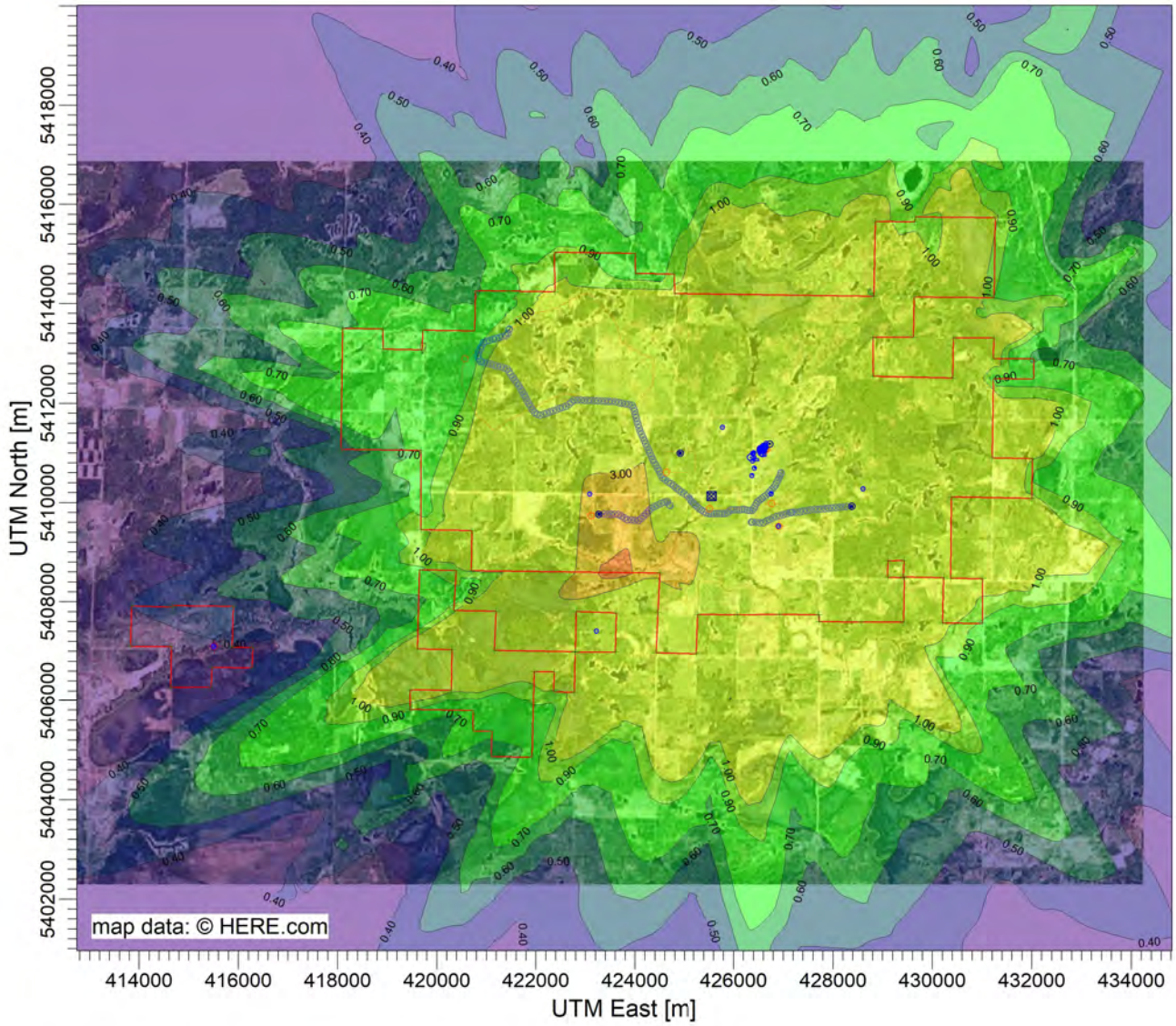

PLOT FILE OF HIGH 1ST HIGH 24-HR VALUES FOR SOURCE GROUP: INPITHR ug/m^3

Max: 4.33 [ug/m^3] at (423610.78, 5408569.00)

0.12 0.40 0.50 0.60 0.70 0.90 1.00 3.00 4.00 4.33

COMMENTS:	SOURCES:	COMPANY NAME:	
	30	**Trinity Consultants Ontario**	
	RECEPTORS:	MODELER:	
	8294	**Caleb Stuckless**	
	OUTPUT TYPE:	SCALE: 1:138,753	
	Concentration	0 5 km	
	MAX:	DATE:	PROJECT NO.:
	4.33 ug/m^3	**2021-03-13**	

PROJECT TITLE:

New Gold Rainy River Mine
ESDM Update

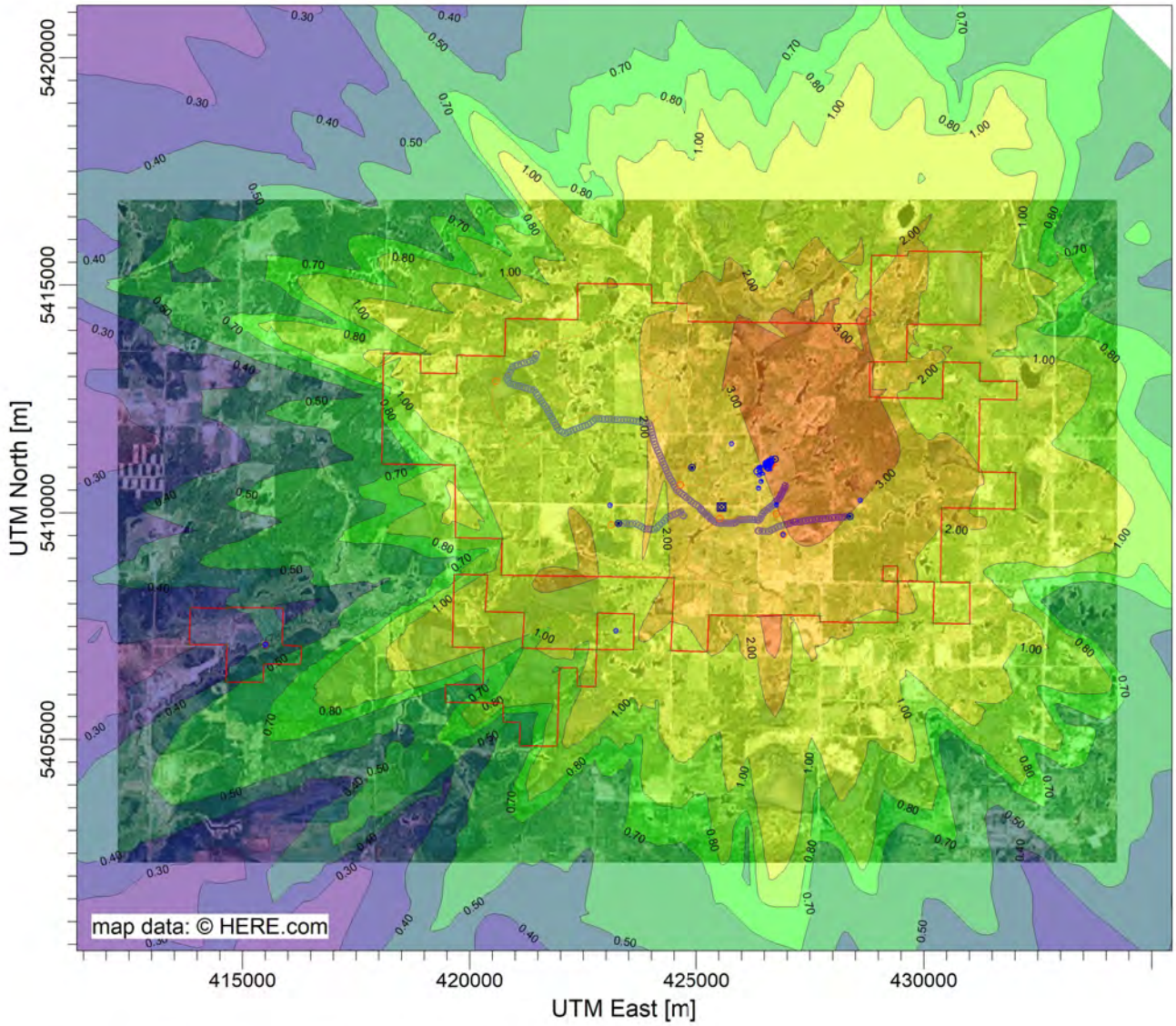

PLOT FILE OF HIGH 1ST HIGH 24-HR VALUES FOR SOURCE GROUP: LEACH1 ug/m^3

Max: 3.81 [ug/m^3] at (427330.00, 5414223.00)

0.13 0.30 0.40 0.50 0.70 0.80 1.00 2.00 3.00 3.81

COMMENTS:	SOURCES:	COMPANY NAME:	
	30	**Trinity Consultants Ontario**	
	RECEPTORS:	MODELER:	
	8294	**Caleb Stuckless**	
	OUTPUT TYPE:	SCALE: 1:151,430	
	Concentration	0 5 km	
	MAX:	DATE:	PROJECT NO.:
	3.81 ug/m^3	**2021-03-13**	

PROJECT TITLE:

New Gold Rainy River Mine
ESDM Update

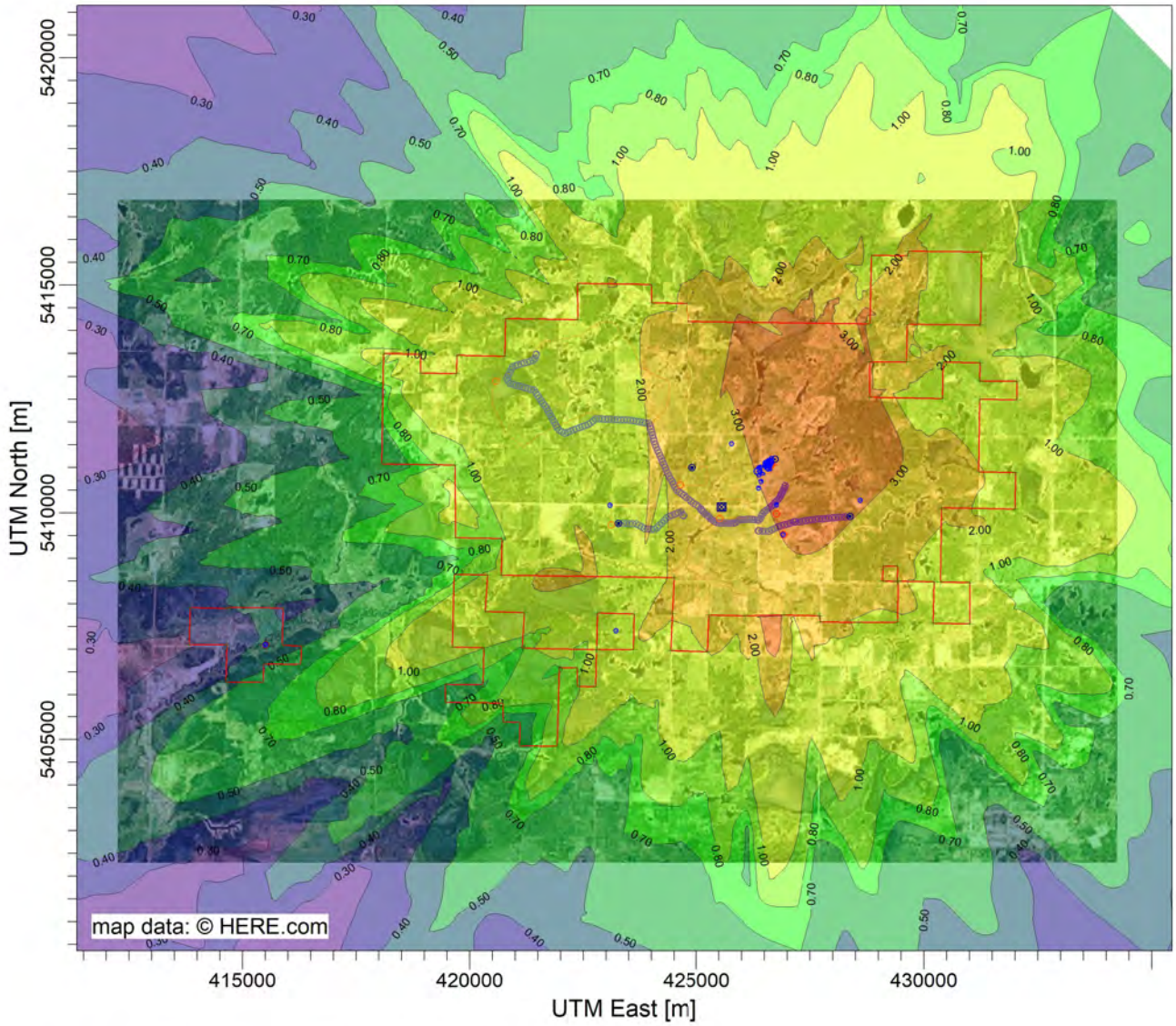

PLOT FILE OF HIGH 1ST HIGH 24-HR VALUES FOR SOURCE GROUP: LEACH2 ug/m^3

Max: 3.83 [ug/m^3] at (427330.00, 5414223.00)

0.13 0.30 0.40 0.50 0.70 0.80 1.00 2.00 3.00 3.83

COMMENTS:	SOURCES:	COMPANY NAME:	
	30	**Trinity Consultants Ontario**	
	RECEPTORS:	MODELER:	
	8294	**Caleb Stuckless**	
	OUTPUT TYPE:	SCALE: 1:151,430	
	Concentration	0 5 km	
	MAX:	DATE:	PROJECT NO.:
	3.83 ug/m^3	**2021-03-13**	

PROJECT TITLE:

New Gold Rainy River Mine
ESDM Update

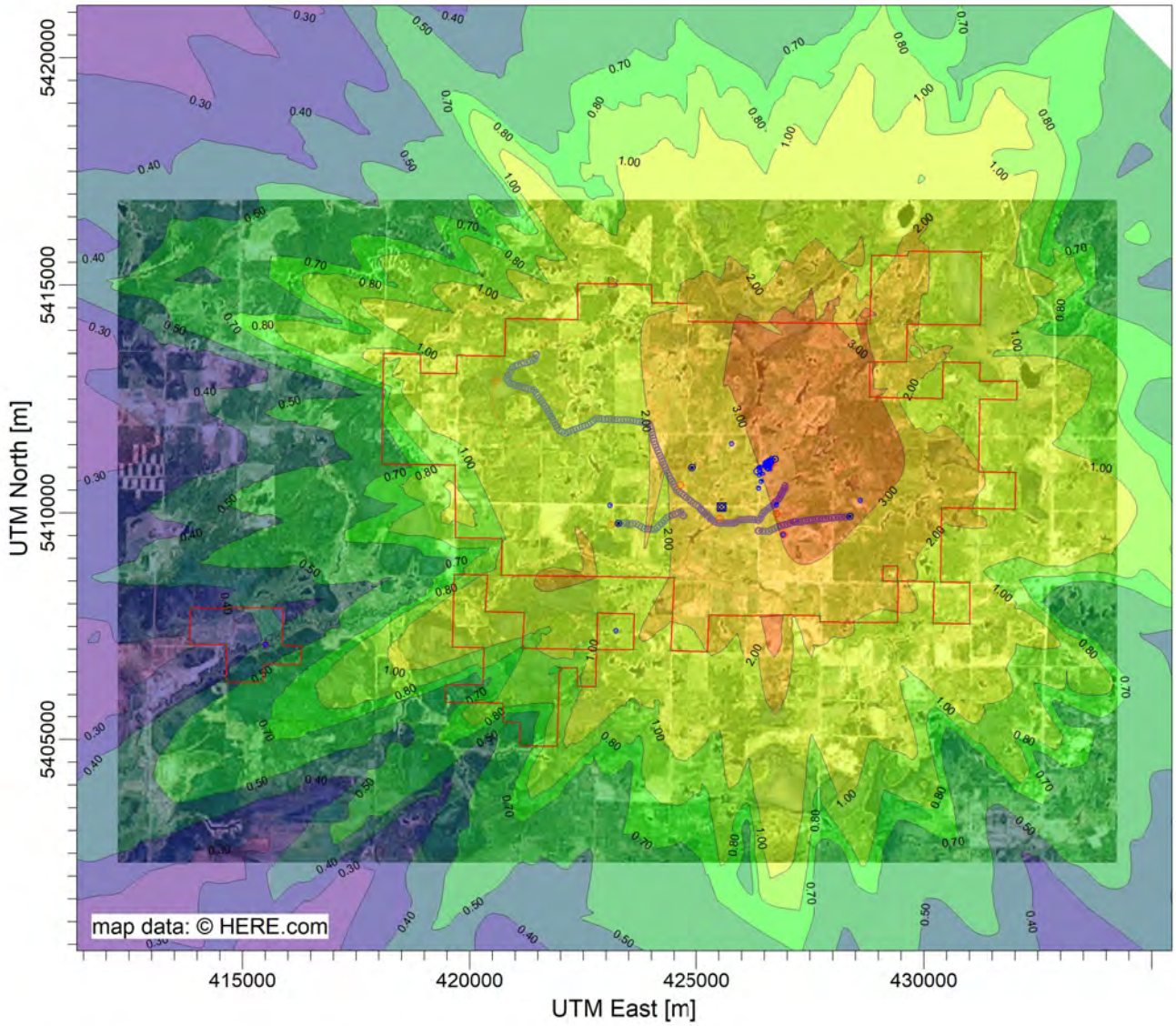

PLOT FILE OF HIGH 1ST HIGH 24-HR VALUES FOR SOURCE GROUP: LEACH3 ug/m^3

Max: 3.82 [ug/m^3] at (427330.00, 5414223.00)

0.13 0.30 0.40 0.50 0.70 0.80 1.00 2.00 3.00 3.82

COMMENTS:	SOURCES:	COMPANY NAME:	
	30	**Trinity Consultants Ontario**	
	RECEPTORS:	MODELER:	
	8294	**Caleb Stuckless**	
	OUTPUT TYPE:	SCALE: 1:151,430	
	Concentration	0 5 km	
	MAX:	DATE:	PROJECT NO.:
	3.82 ug/m^3	**2021-03-13**	

PROJECT TITLE:

New Gold Rainy River Mine
ESDM Update

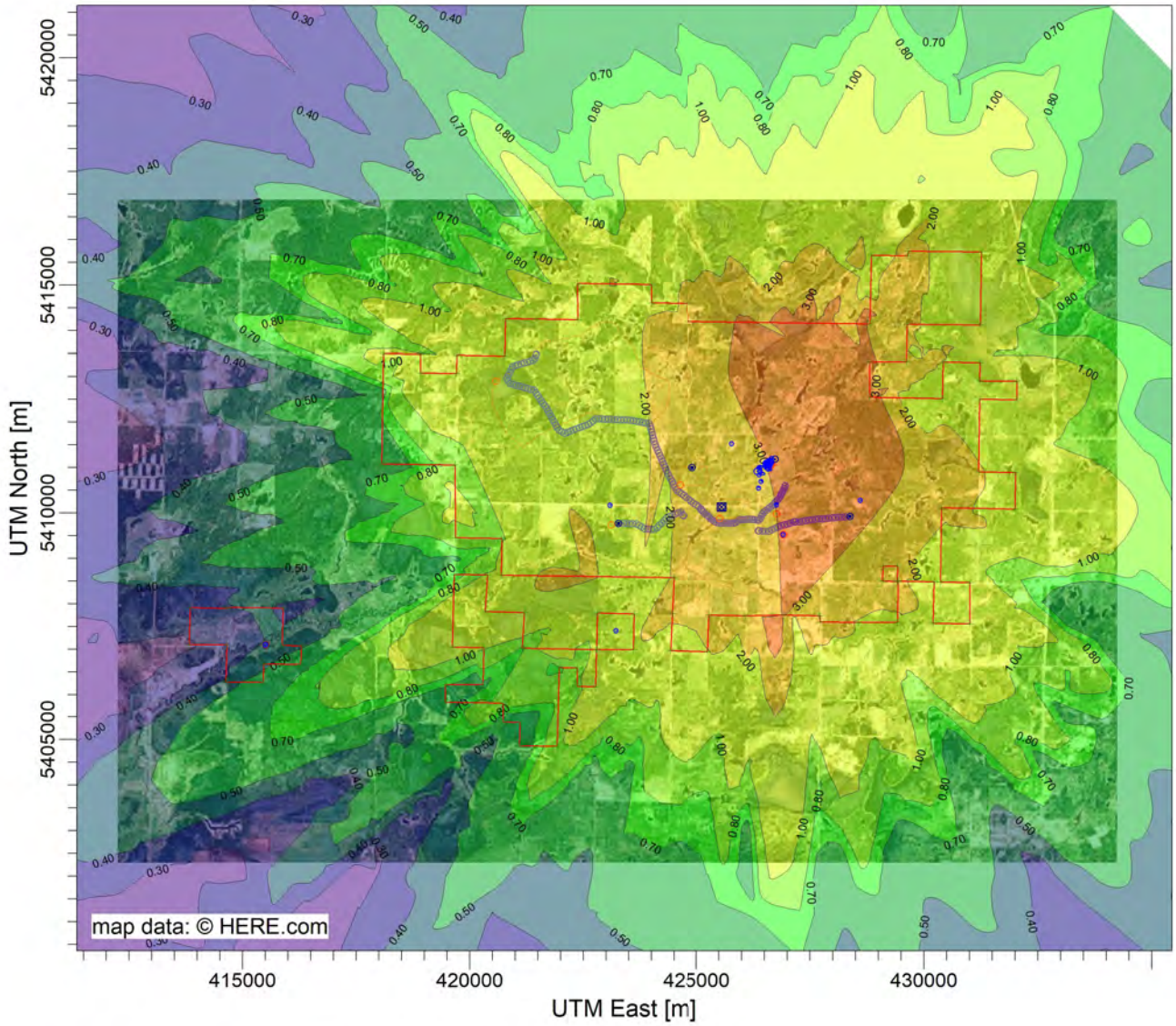

PLOT FILE OF HIGH 1ST HIGH 24-HR VALUES FOR SOURCE GROUP: LEACH4 ug/m^3

Max: 3.79 [ug/m^3] at (427330.00, 5414223.00)

0.13 0.30 0.40 0.50 0.70 0.80 1.00 2.00 3.00 3.79

COMMENTS:	SOURCES:	COMPANY NAME:	
	30	**Trinity Consultants Ontario**	
	RECEPTORS:	MODELER:	
	8294	**Caleb Stuckless**	
	OUTPUT TYPE:	SCALE: 1:151,430	
	Concentration	0 5 km	
	MAX:	DATE:	PROJECT NO.:
	3.79 ug/m^3	**2021-03-13**	

PROJECT TITLE:

New Gold Rainy River Mine
ESDM Update

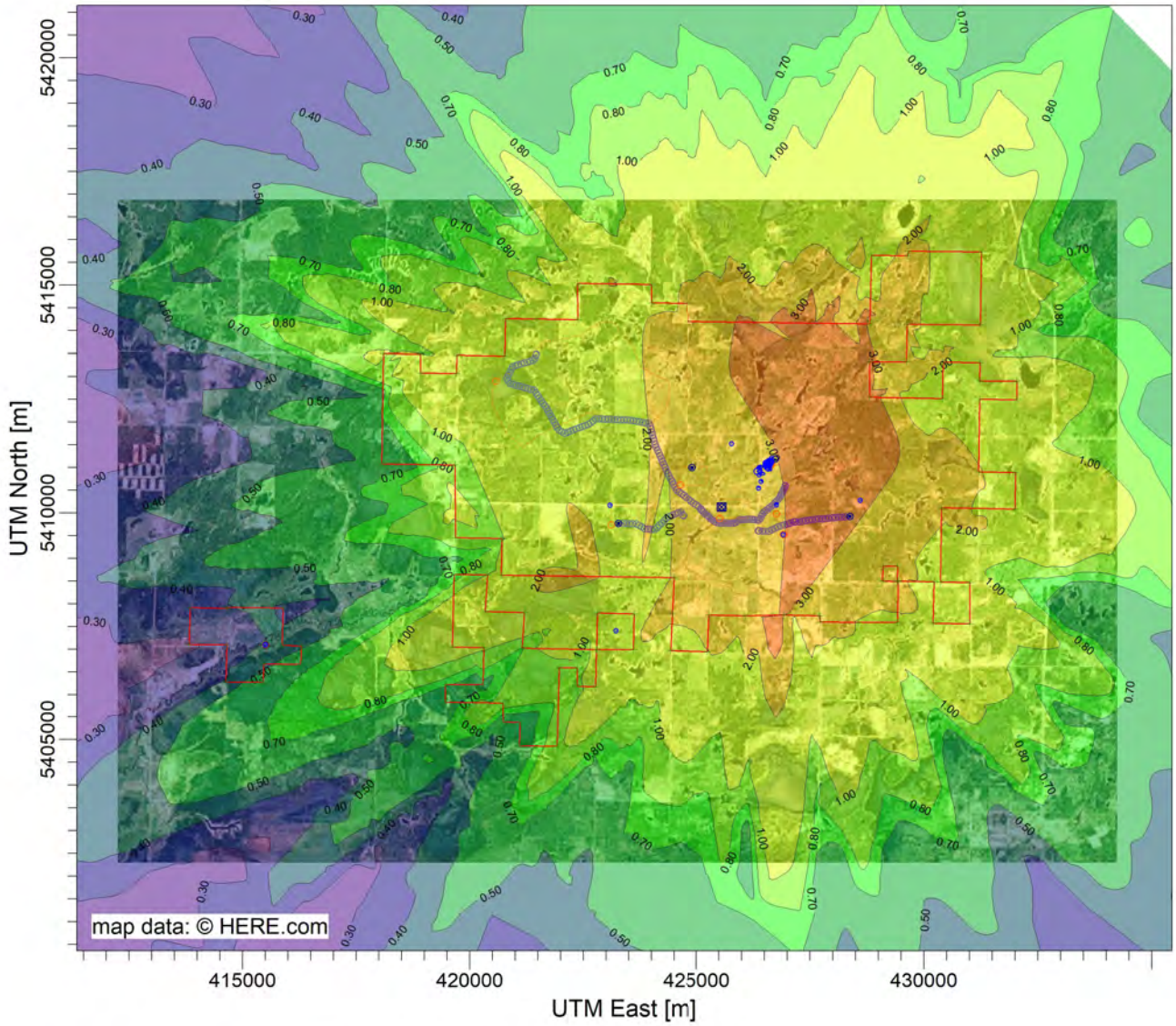

PLOT FILE OF HIGH 1ST HIGH 24-HR VALUES FOR SOURCE GROUP: LEACH5 ug/m^3

Max: 3.76 [ug/m^3] at (427330.00, 5414223.00)

0.13 0.30 0.40 0.50 0.70 0.80 1.00 2.00 3.00 3.76

COMMENTS:	SOURCES:	COMPANY NAME:	
	30	**Trinity Consultants Ontario**	
	RECEPTORS:	MODELER:	
	8294	**Caleb Stuckless**	
	OUTPUT TYPE:	SCALE: 1:151,430	
	Concentration	0 5 km	
	MAX:	DATE:	PROJECT NO.:
	3.76 ug/m^3	**2021-03-13**	

PROJECT TITLE:

New Gold Rainy River Mine
ESDM Update

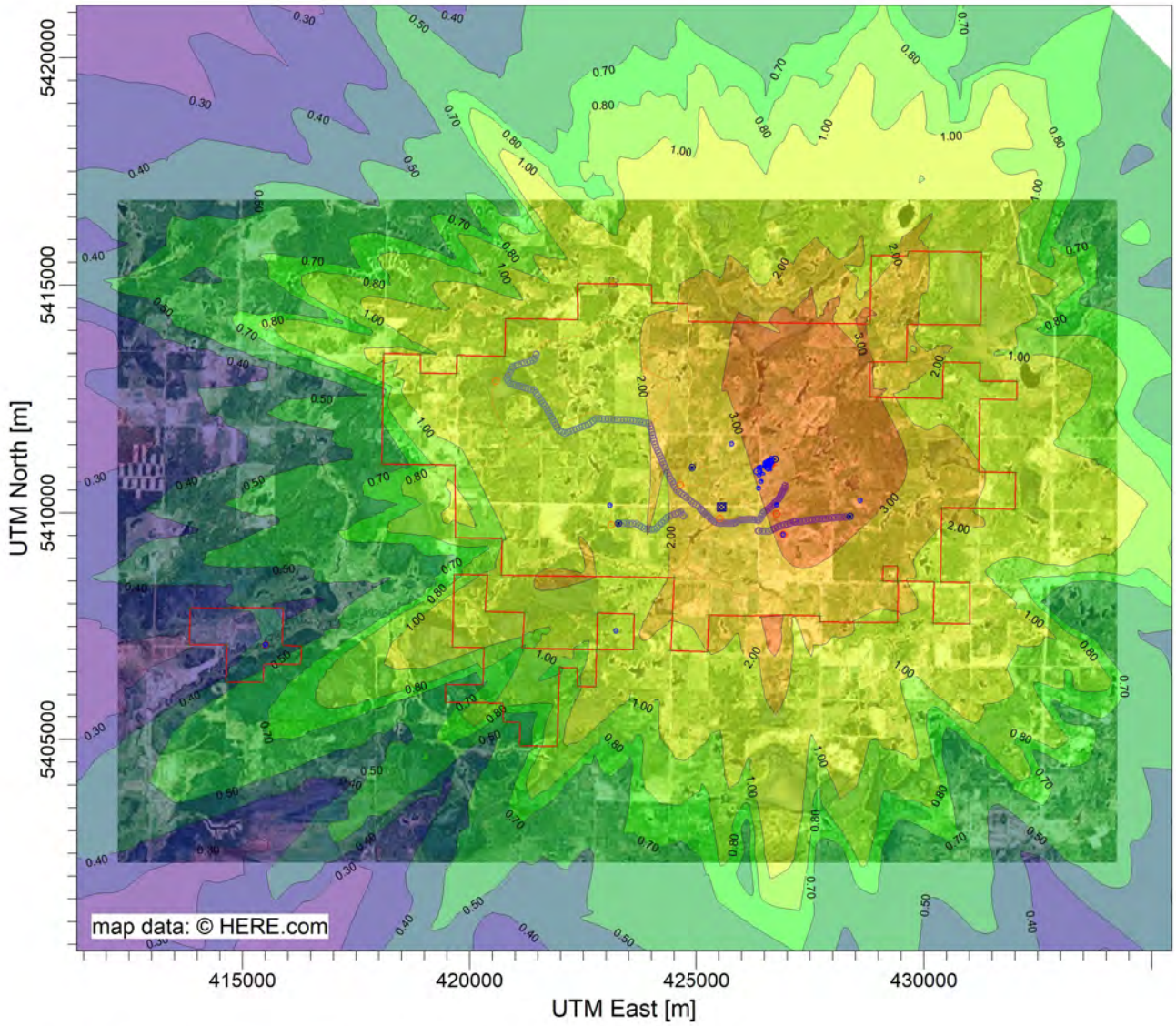

PLOT FILE OF HIGH 1ST HIGH 24-HR VALUES FOR SOURCE GROUP: LEACH6 ug/m^3

Max: 3.85 [ug/m^3] at (427330.00, 5414223.00)

0.13 0.30 0.40 0.50 0.70 0.80 1.00 2.00 3.00 3.85

COMMENTS:	SOURCES:	COMPANY NAME:	
	30	**Trinity Consultants Ontario**	
	RECEPTORS:	MODELER:	
	8294	**Caleb Stuckless**	
	OUTPUT TYPE:	SCALE: 1:151,430	
	Concentration	0 5 km	
	MAX:	DATE:	PROJECT NO.:
	3.85 ug/m^3	**2021-03-13**	

PROJECT TITLE:

New Gold Rainy River Mine
ESDM Update

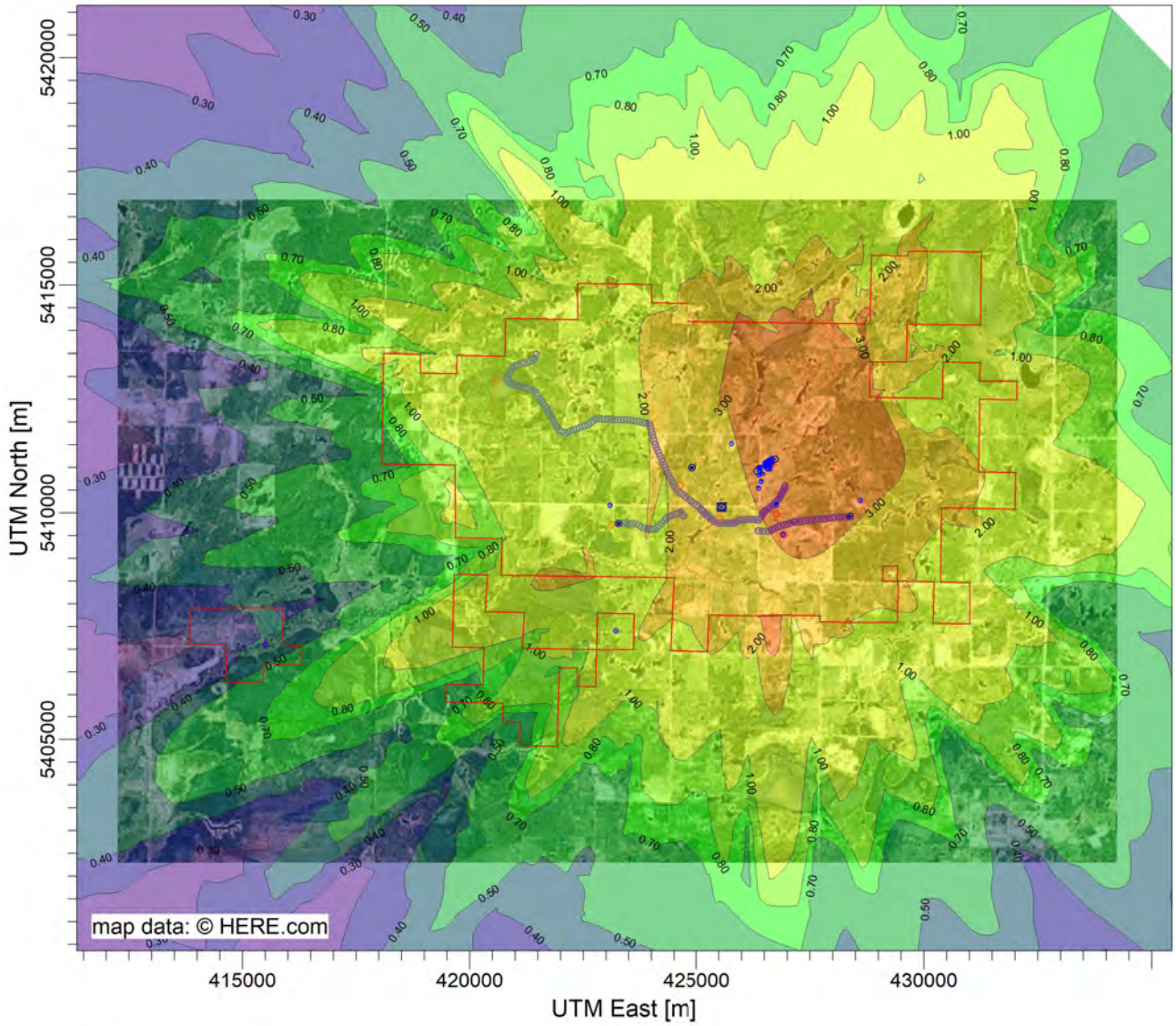

PLOT FILE OF HIGH 1ST HIGH 24-HR VALUES FOR SOURCE GROUP: LEACH7 ug/m^3

Max: 3.85 [ug/m^3] at (427330.00, 5414223.00)

0.13 0.30 0.40 0.50 0.70 0.80 1.00 2.00 3.00 3.85

COMMENTS:	SOURCES:	COMPANY NAME:	
	30	**Trinity Consultants Ontario**	
	RECEPTORS:	MODELER:	
	8294	**Caleb Stuckless**	
	OUTPUT TYPE:	SCALE: 1:151,430	
	Concentration	0 5 km	
	MAX:	DATE:	PROJECT NO.:
	3.85 ug/m^3	**2021-03-13**	

PROJECT TITLE:

New Gold Rainy River Mine
ESDM Update

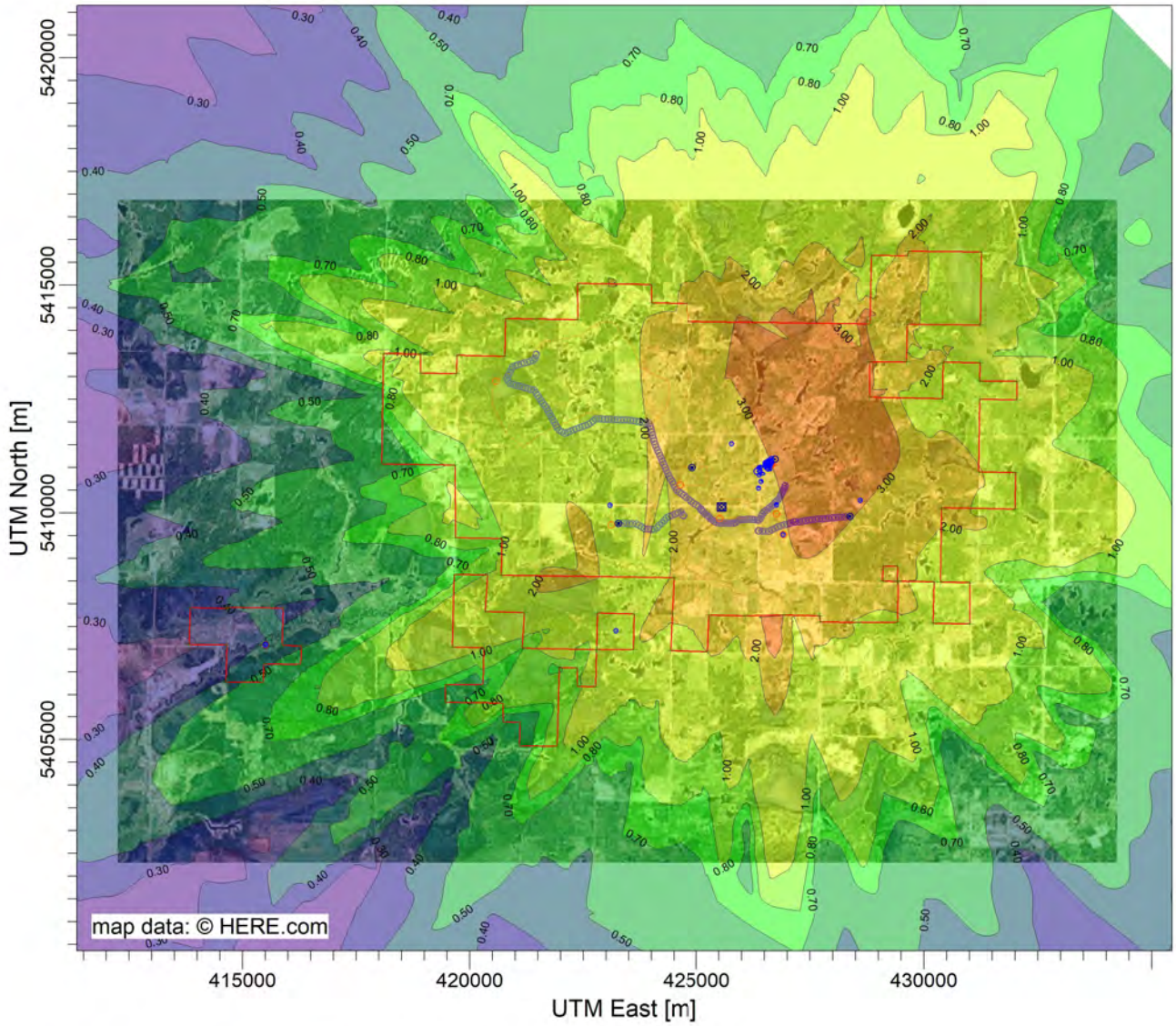

PLOT FILE OF HIGH 1ST HIGH 24-HR VALUES FOR SOURCE GROUP: LEACH8 ug/m^3

Max: 3.80 [ug/m^3] at (427330.00, 5414223.00)

0.13 0.30 0.40 0.50 0.70 0.80 1.00 2.00 3.00 3.80

COMMENTS:	SOURCES:	COMPANY NAME:	
	30	**Trinity Consultants Ontario**	
	RECEPTORS:	MODELER:	
	8294	**Caleb Stuckless**	
	OUTPUT TYPE:	SCALE: 1:151,430	
	Concentration	0 5 km	
	MAX:	DATE:	PROJECT NO.:
	3.80 ug/m^3	**2021-03-13**	

PROJECT TITLE:

New Gold Rainy River Mine
ESDM Update

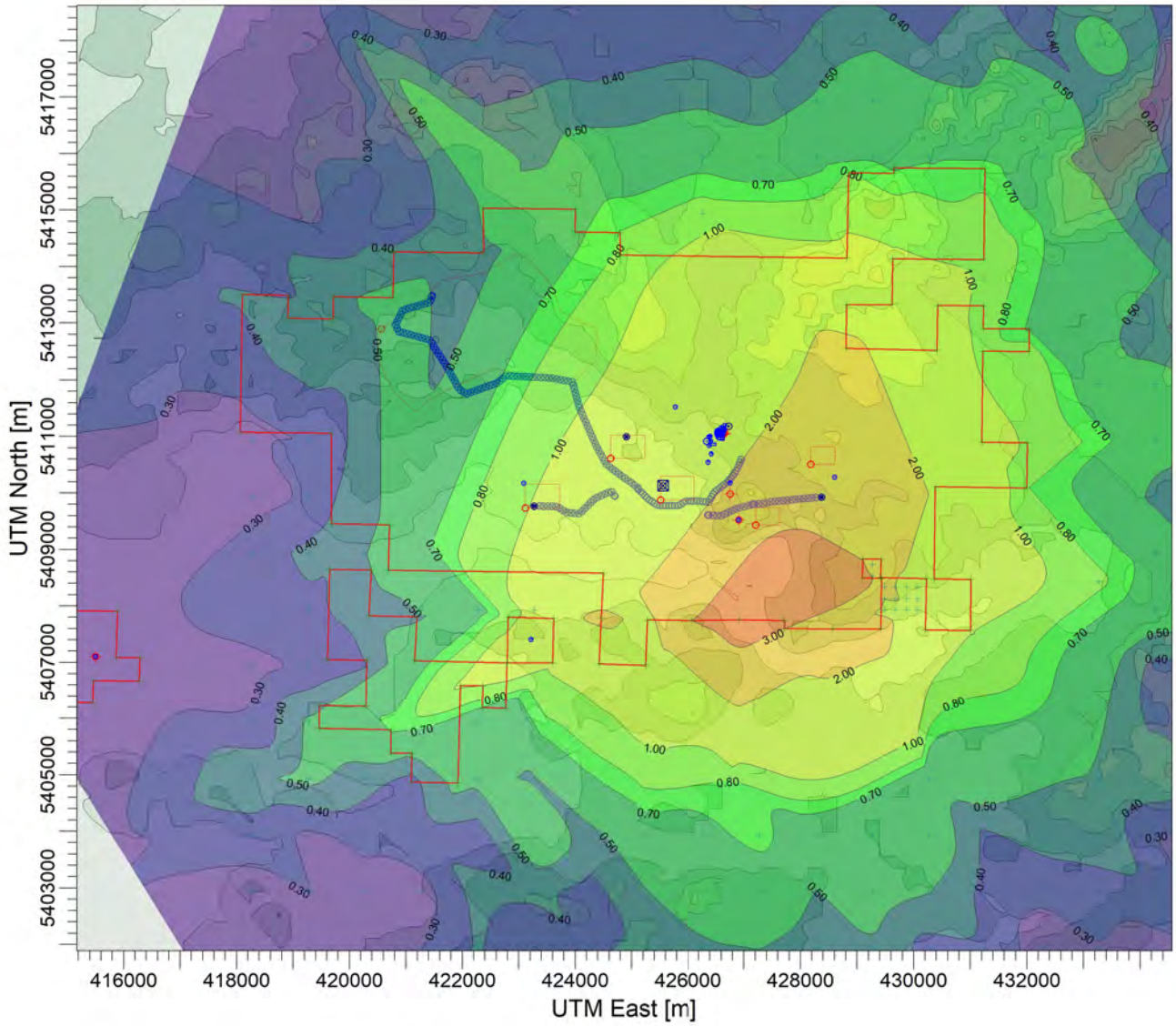

PLOT FILE OF HIGH 1ST HIGH 24-HR VALUES FOR SOURCE GROUP: LGO

ug/m^3

Max: 3.52 [ug/m^3] at (426917.17, 5407750.31)

0.14 0.30 0.40 0.50 0.70 0.80 1.00 2.00 3.00 3.52

COMMENTS:	SOURCES:	COMPANY NAME:	
	33	**Trinity Consultants Ontario**	
	RECEPTORS:	MODELER:	
	1871	**Caleb Stuckless**	
	OUTPUT TYPE:	SCALE: 1:121,879	
	Concentration	0 4 km	
	MAX:	DATE:	PROJECT NO.:
	3.52 ug/m^3	**2021-03-24**	

PROJECT TITLE:

New Gold Rainy River Mine
ESDM Update

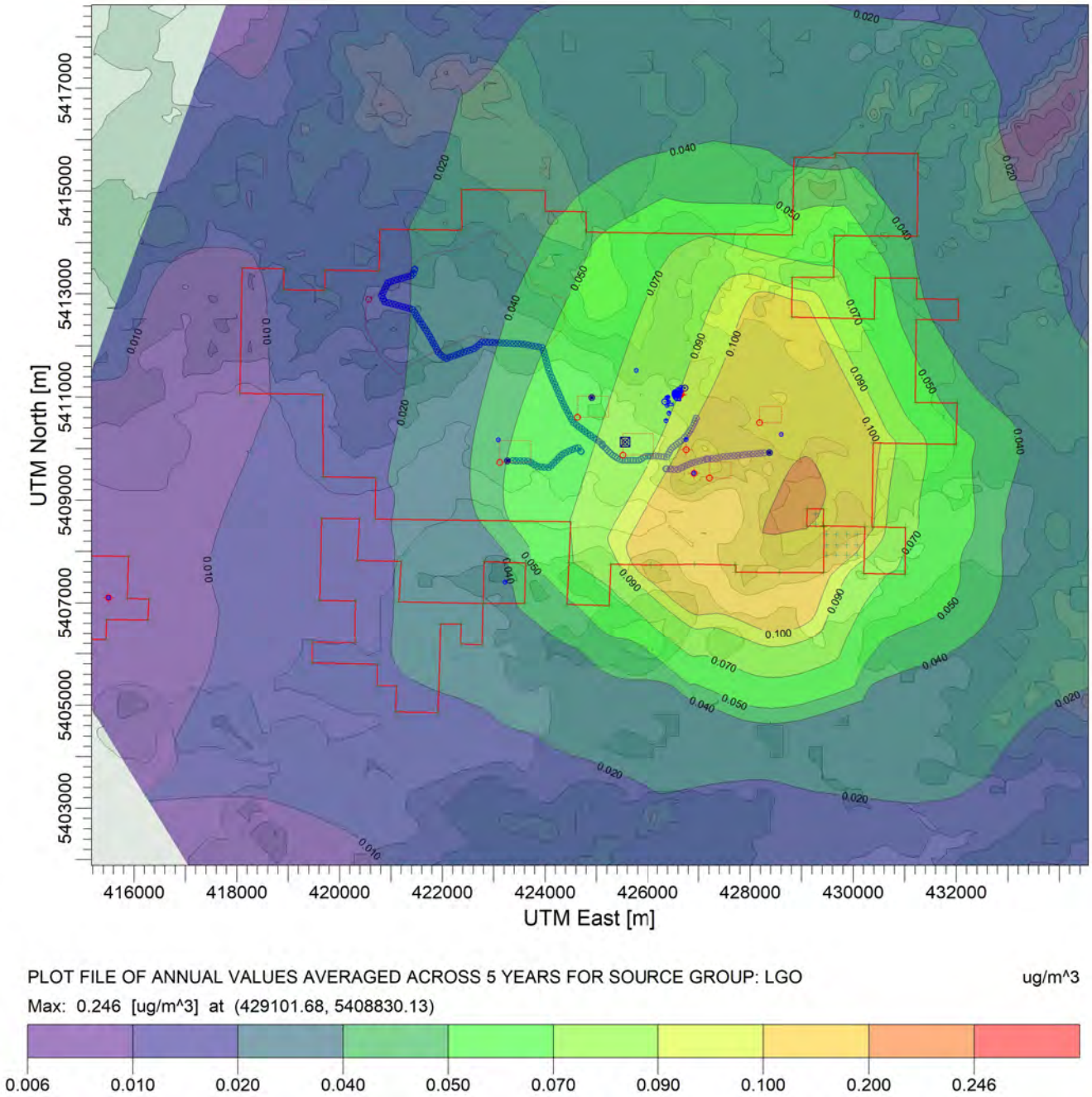

COMMENTS:	SOURCES:	COMPANY NAME:	
	33	**Trinity Consultants Ontario**	
	RECEPTORS:	MODELER:	
	1871	**Caleb Stuckless**	
	OUTPUT TYPE:	SCALE: 1:121,868	
	Concentration	0 4 km	
	MAX:	DATE:	PROJECT NO.:
	0.246 ug/m^3	**2021-03-24**	

PROJECT TITLE:

New Gold Rainy River Mine
ESDM Update

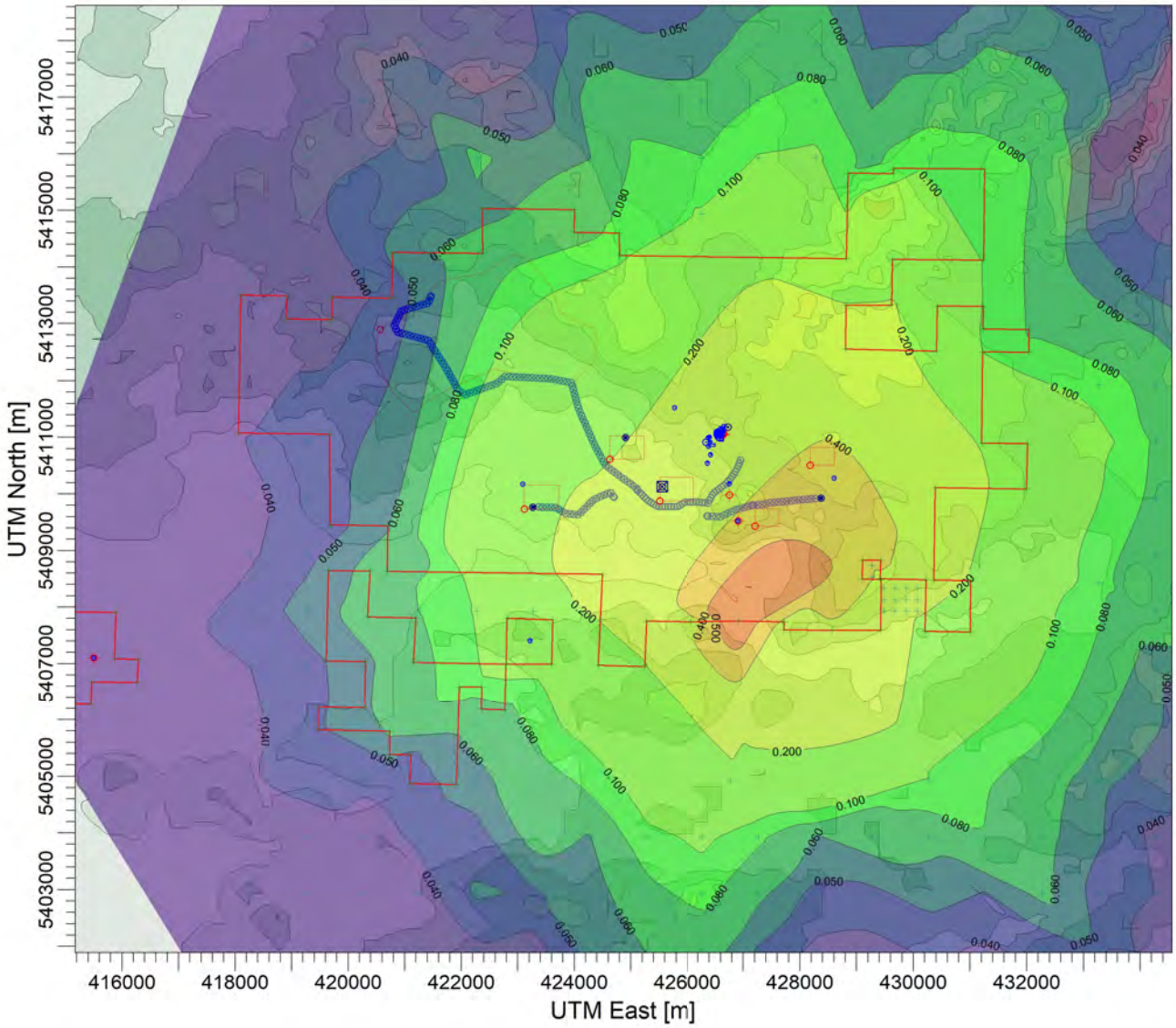

PLOT FILE OF HIGH 1ST HIGH MONTH VALUES FOR SOURCE GROUP: LGO

ug/m^3

Max: 0.598 [ug/m^3] at (426917.17, 5407750.31)

0.017 0.040 0.050 0.060 0.080 0.100 0.200 0.400 0.500 0.598

COMMENTS:	SOURCES:	COMPANY NAME:	
	33	**Trinity Consultants Ontario**	
	RECEPTORS:	MODELER:	
	1871	**Caleb Stuckless**	
	OUTPUT TYPE:	SCALE: 1:121,868	
	Concentration	0 4 km	
	MAX:	DATE:	PROJECT NO.:
	0.598 ug/m^3	**2021-03-24**	

PROJECT TITLE:

New Gold Rainy River Mine
ESDM Update

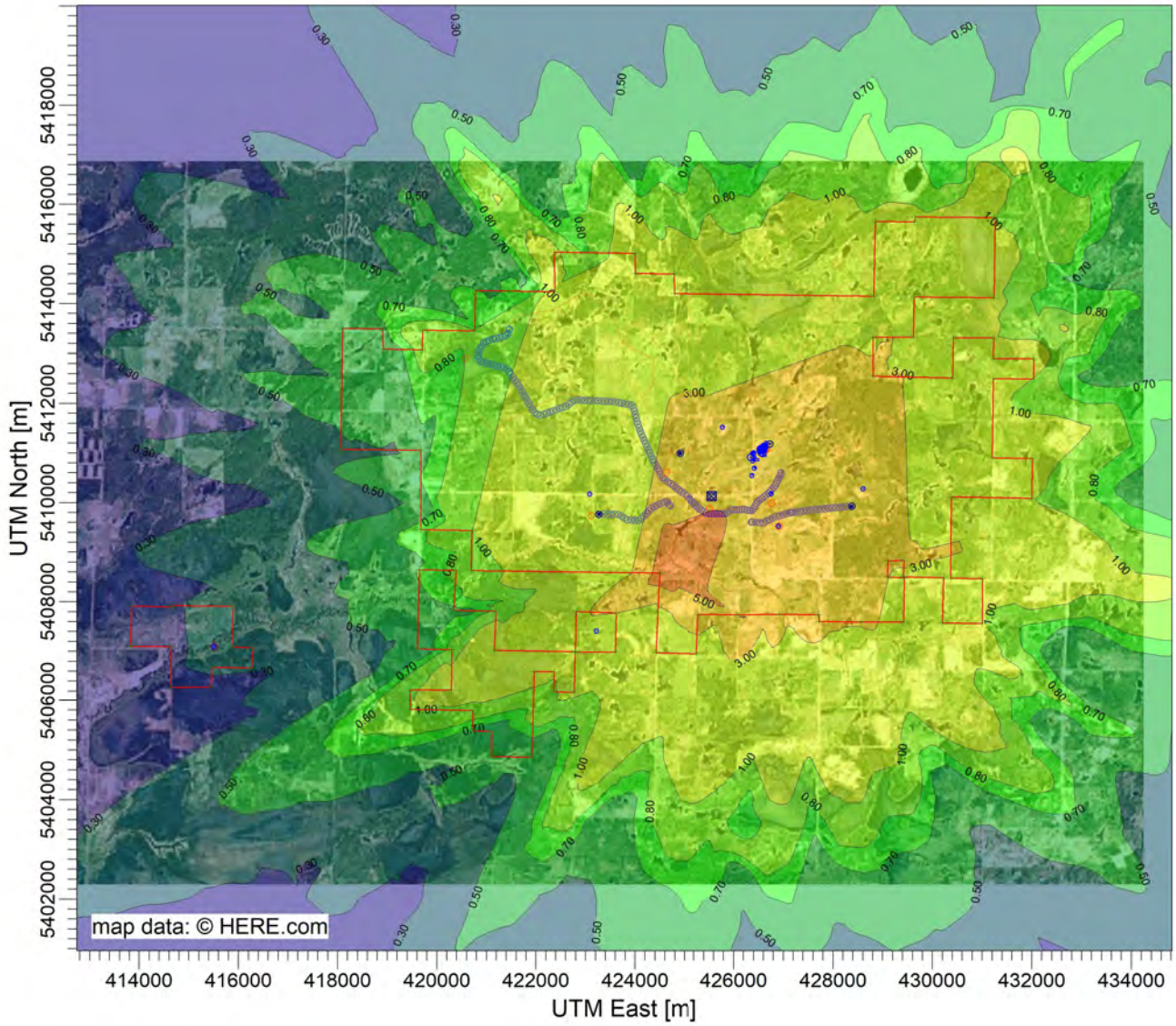

PLOT FILE OF HIGH 1ST HIGH 24-HR VALUES FOR SOURCE GROUP: LG&PAG_H ug/m^3

Max: 5.74 [ug/m^3] at (424498.55, 5408579.22)

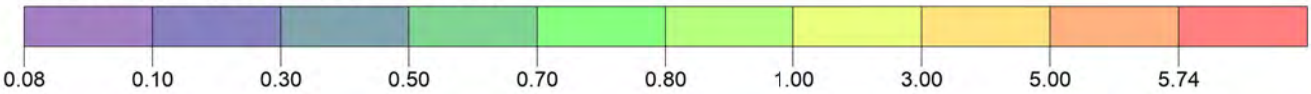

COMMENTS:	SOURCES:	COMPANY NAME:	
	30	**Trinity Consultants Ontario**	
	RECEPTORS:	MODELER:	
	8294	**Caleb Stuckless**	
	OUTPUT TYPE:	SCALE: 1:138,753	
	Concentration	0 5 km	
	MAX:	DATE:	PROJECT NO.:
	5.74 ug/m^3	**2021-03-13**	

PROJECT TITLE:

New Gold Rainy River Mine
ESDM Update

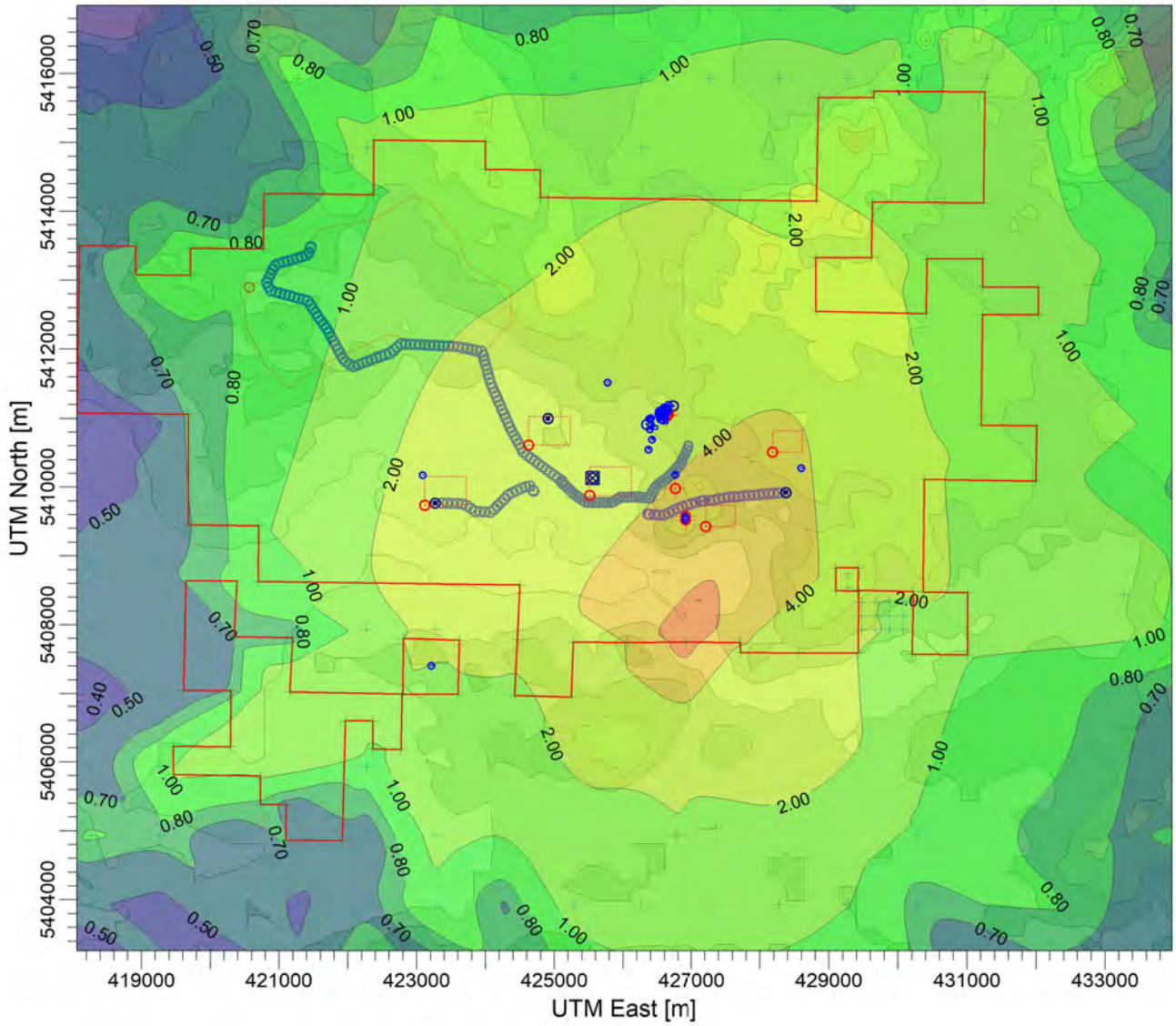

PLOT FILE OF HIGH 1ST HIGH 24-HR VALUES FOR SOURCE GROUP: MOBI

ug/m^3

Max: 5.36 [ug/m^3] at (426917.17, 5407750.31)

COMMENTS:	SOURCES:	COMPANY NAME:	
	34	**Trinity Consultants Ontario**	
	RECEPTORS:	MODELER:	
	1871	**Caleb Stuckless**	
	OUTPUT TYPE:	SCALE: 1:100,000	
	Concentration	0 3 km	
	MAX:	DATE:	PROJECT NO.:
	5.36 ug/m^3	**2021-04-09**	

PROJECT TITLE:

New Gold Rainy River Mine
ESDM Update

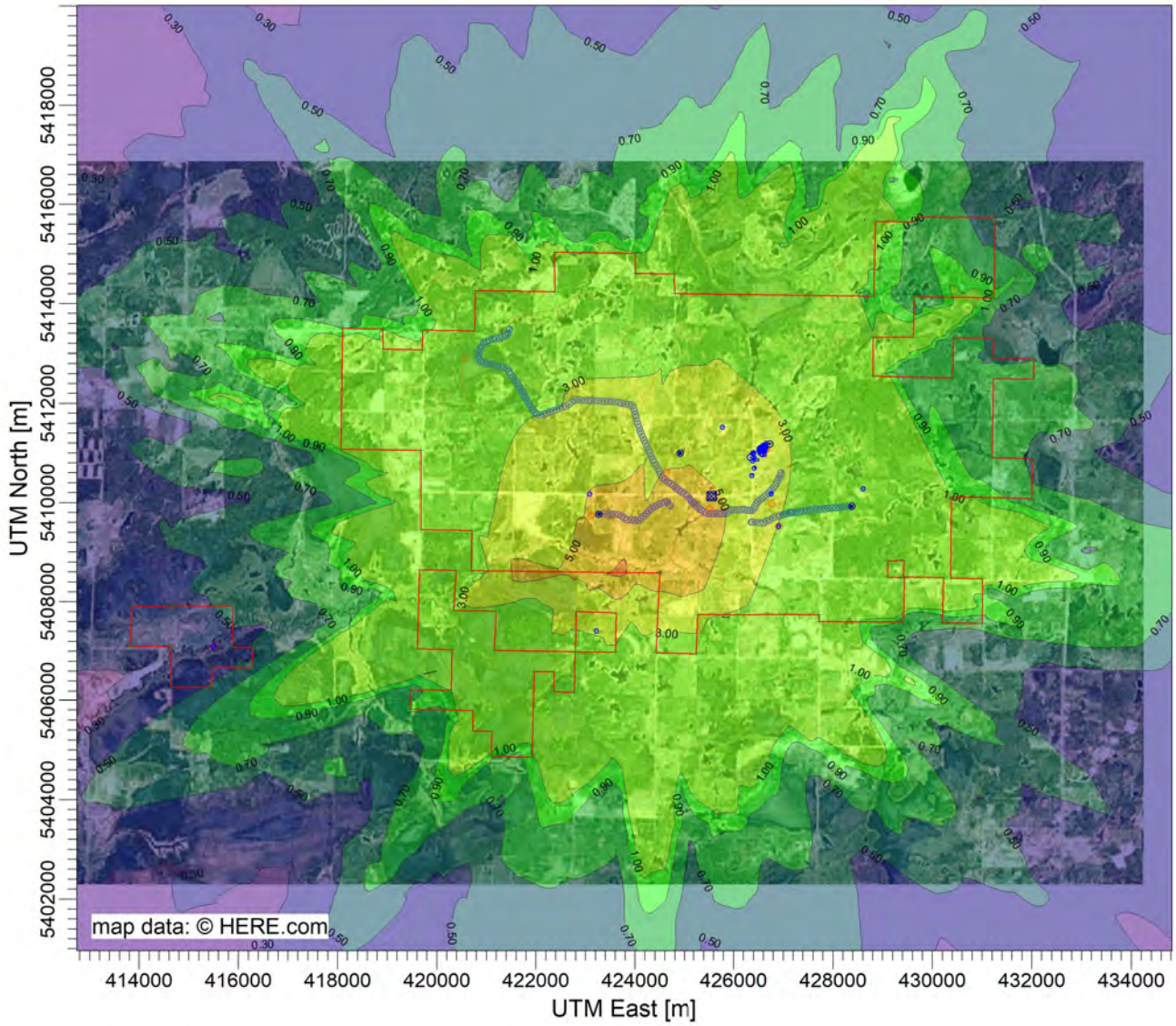

PLOT FILE OF HIGH 1ST HIGH 24-HR VALUES FOR SOURCE GROUP: NPAG_HR ug/m^3

Max: 7.36 [ug/m^3] at (423706.94, 5408569.00)

0.10 0.30 0.50 0.70 0.90 1.00 3.00 5.00 7.00 7.36

COMMENTS:	SOURCES:	COMPANY NAME:	
	30	**Trinity Consultants Ontario**	
	RECEPTORS:	MODELER:	
	8294	**Caleb Stuckless**	
	OUTPUT TYPE:	SCALE: 1:138,753	
	Concentration	0 5 km	
	MAX:	DATE:	PROJECT NO.:
	7.36 ug/m^3	**2021-03-13**	

PROJECT TITLE:

New Gold Rainy River Mine
ESDM Update

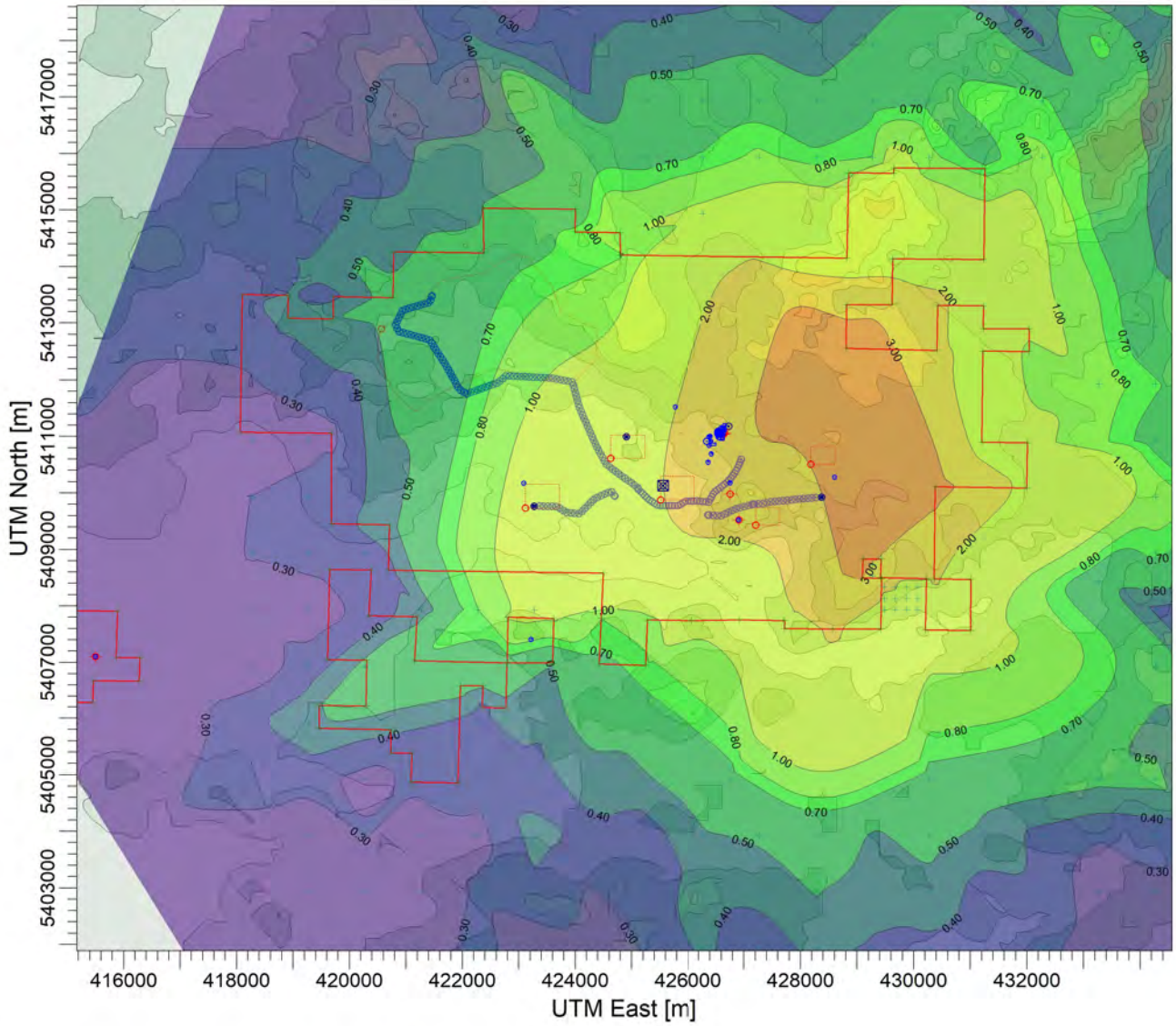

PLOT FILE OF HIGH 1ST HIGH 24-HR VALUES FOR SOURCE GROUP: OC1 ug/m^3

Max: 3.98 [ug/m^3] at (428808.13, 5412548.18)

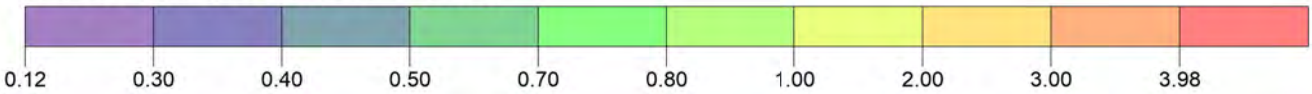

COMMENTS:	SOURCES:	COMPANY NAME:	
	33	**Trinity Consultants Ontario**	
	RECEPTORS:	MODELER:	
	1871	**Caleb Stuckless**	
	OUTPUT TYPE:	SCALE: 1:121,879	
	Concentration	0 4 km	
	MAX:	DATE:	PROJECT NO.:
	3.98 ug/m^3	**2021-03-24**	

PROJECT TITLE:

New Gold Rainy River Mine
ESDM Update

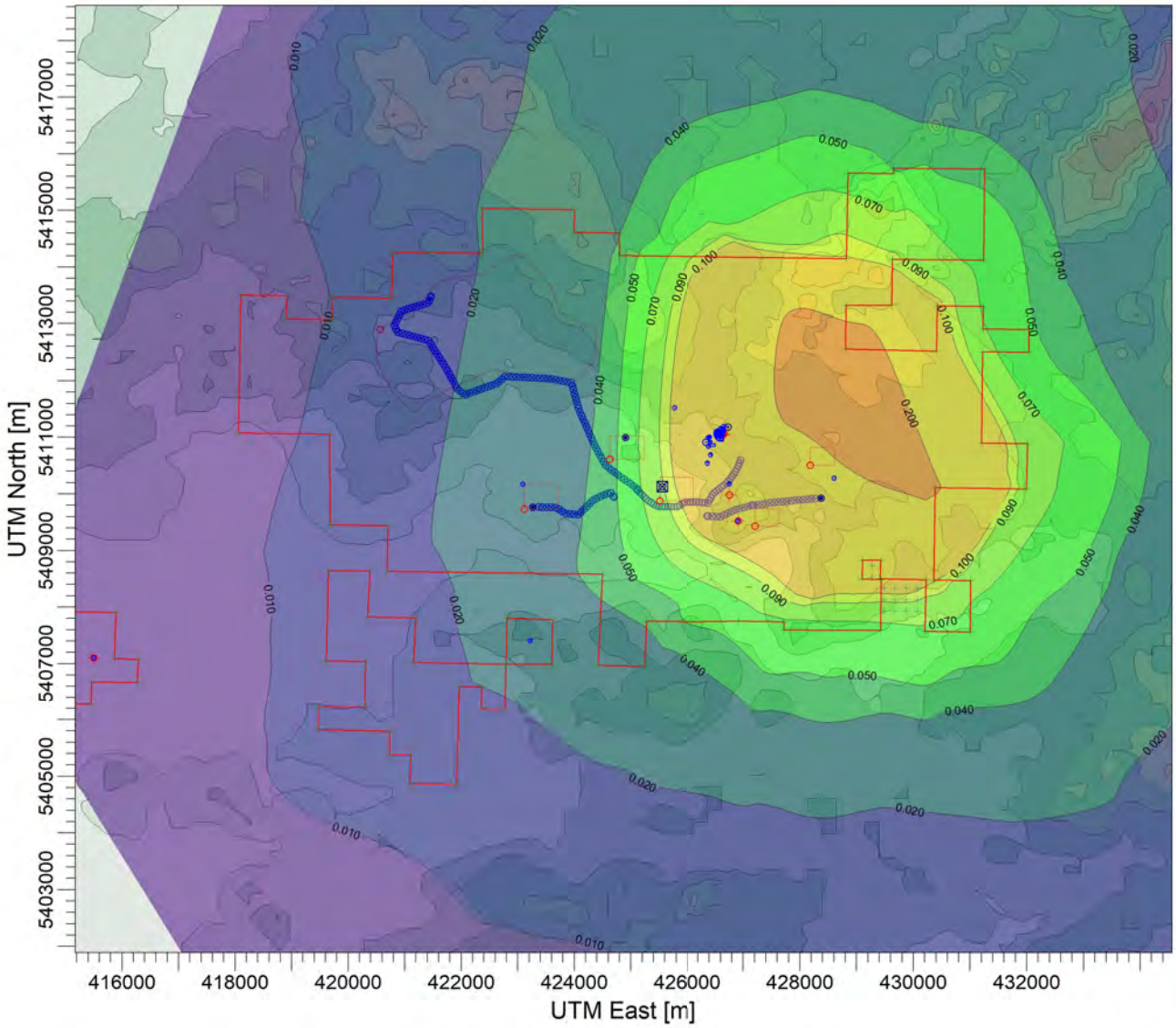

PLOT FILE OF ANNUAL VALUES AVERAGED ACROSS 5 YEARS FOR SOURCE GROUP: OC1 ug/m^3

Max: 0.268 [ug/m^3] at (428808.13, 5412548.18)

0.005 0.010 0.020 0.040 0.050 0.070 0.090 0.100 0.200 0.268

COMMENTS:	SOURCES: **33**	COMPANY NAME: **Trinity Consultants Ontario**	
	RECEPTORS: **1871**	MODELER: **Caleb Stuckless**	Trinity Consultants
	OUTPUT TYPE: **Concentration**	SCALE: 1:121,868 0 4 km	
	MAX: **0.268 ug/m^3**	DATE: **2021-03-24**	PROJECT NO.:

PROJECT TITLE:

New Gold Rainy River Mine
ESDM Update

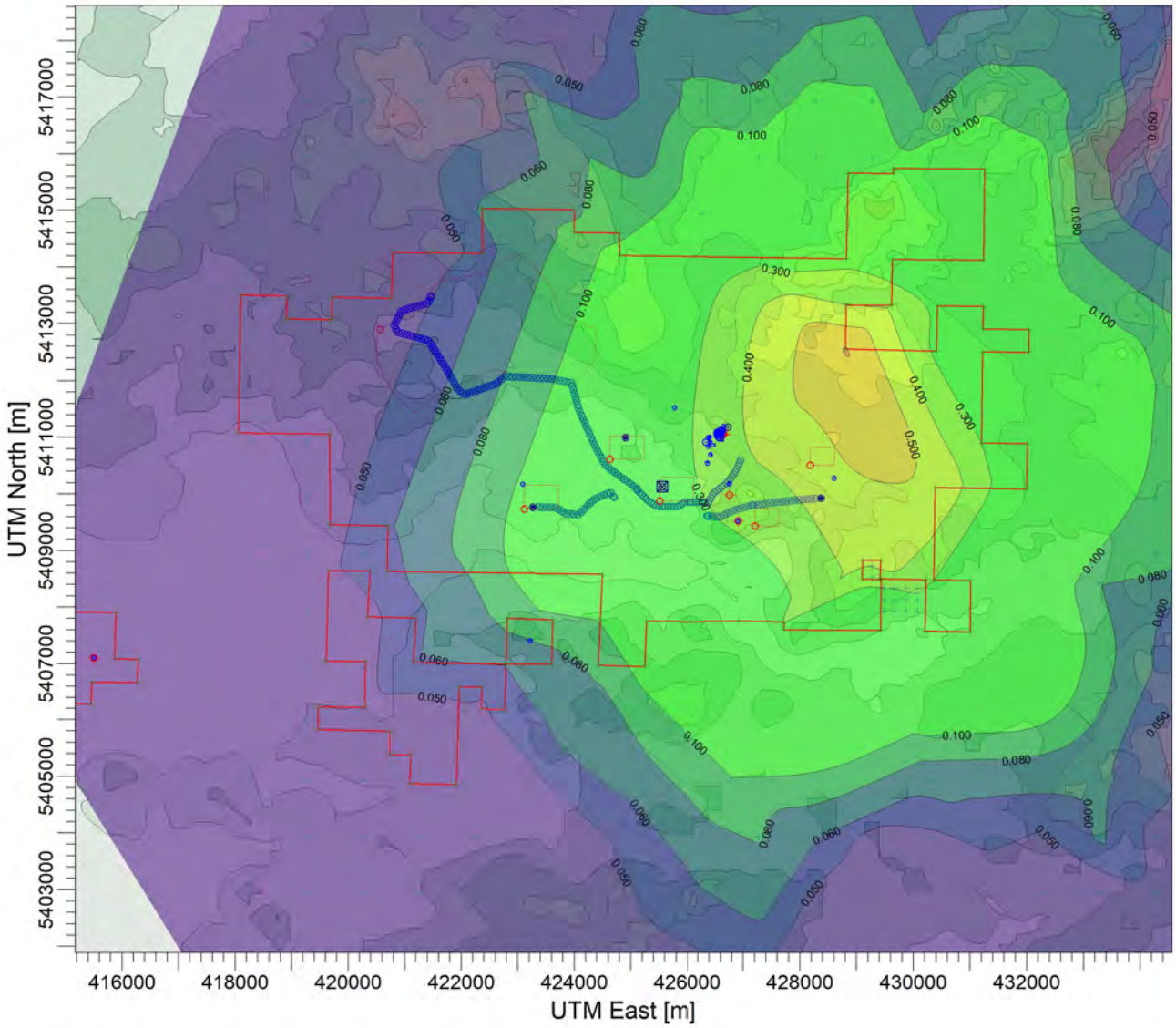

PLOT FILE OF HIGH 1ST HIGH MONTH VALUES FOR SOURCE GROUP: OC1 ug/m^3

Max: 0.605 [ug/m^3] at (428808.13, 5412548.18)

0.017 0.050 0.060 0.080 0.100 0.300 0.400 0.500 0.600 0.605

COMMENTS:	SOURCES:	COMPANY NAME:	
	33	**Trinity Consultants Ontario**	
	RECEPTORS:	MODELER:	
	1871	**Caleb Stuckless**	
	OUTPUT TYPE:	SCALE: 1:121,868	
	Concentration	0 4 km	
	MAX:	DATE:	PROJECT NO.:
	0.605 ug/m^3	**2021-03-24**	

PROJECT TITLE:

New Gold Rainy River Mine
ESDM Update

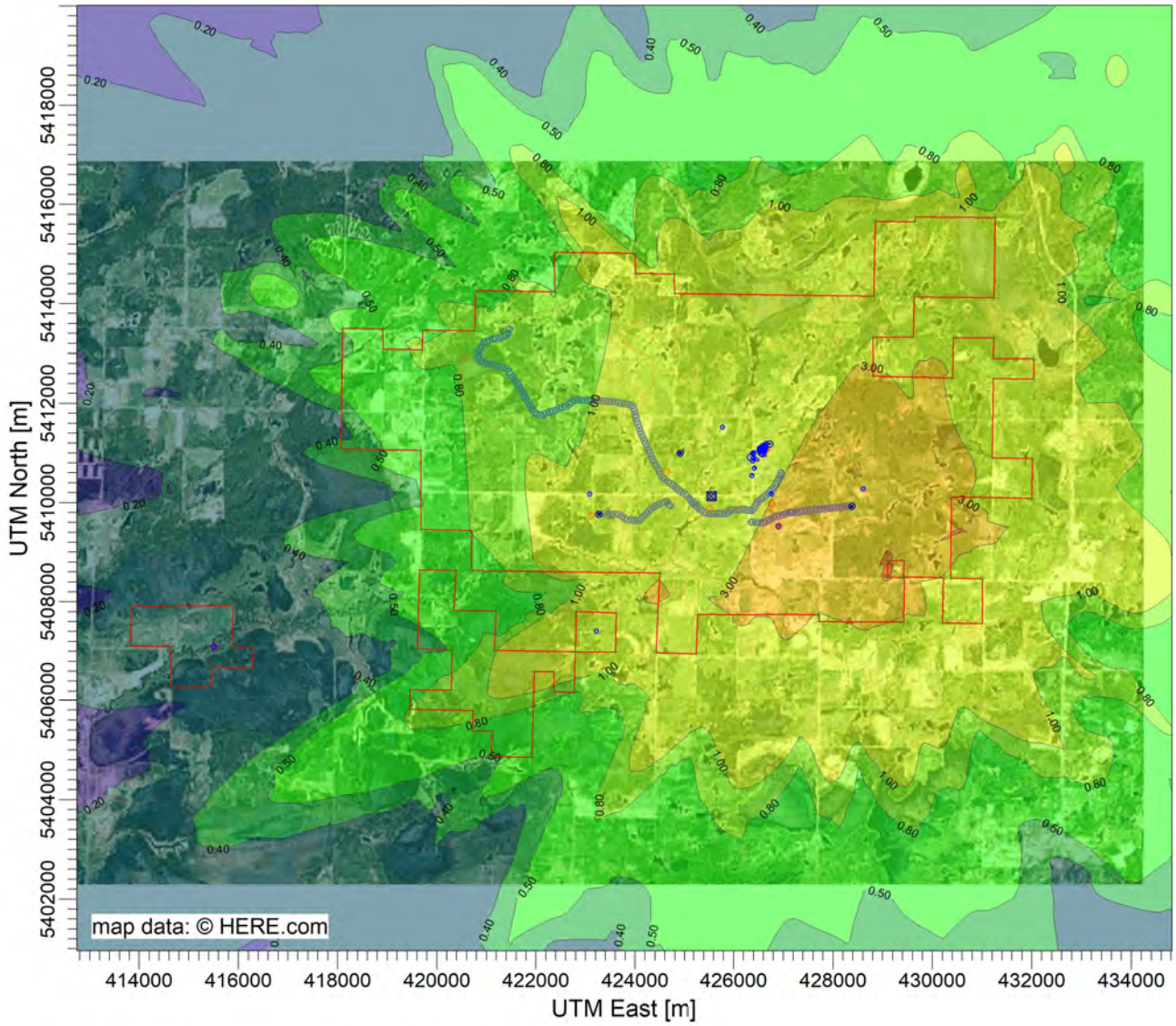

PLOT FILE OF HIGH 1ST HIGH 24-HR VALUES FOR SOURCE GROUP: PAG_HR

ug/m^3

Max: 5.23 [ug/m^3] at (429130.00, 5408623.00)

0.07 0.10 0.20 0.40 0.50 0.80 1.00 3.00 5.00 5.23

COMMENTS:	SOURCES:	COMPANY NAME:	
	30	**Trinity Consultants Ontario**	
	RECEPTORS:	MODELER:	
	8294	**Caleb Stuckless**	
	OUTPUT TYPE:	SCALE: 1:138,753	
	Concentration	0 5 km	
	MAX:	DATE:	PROJECT NO.:
	5.23 ug/m^3	**2021-03-13**	

PROJECT TITLE:

New Gold Rainy River Mine
ESDM Update

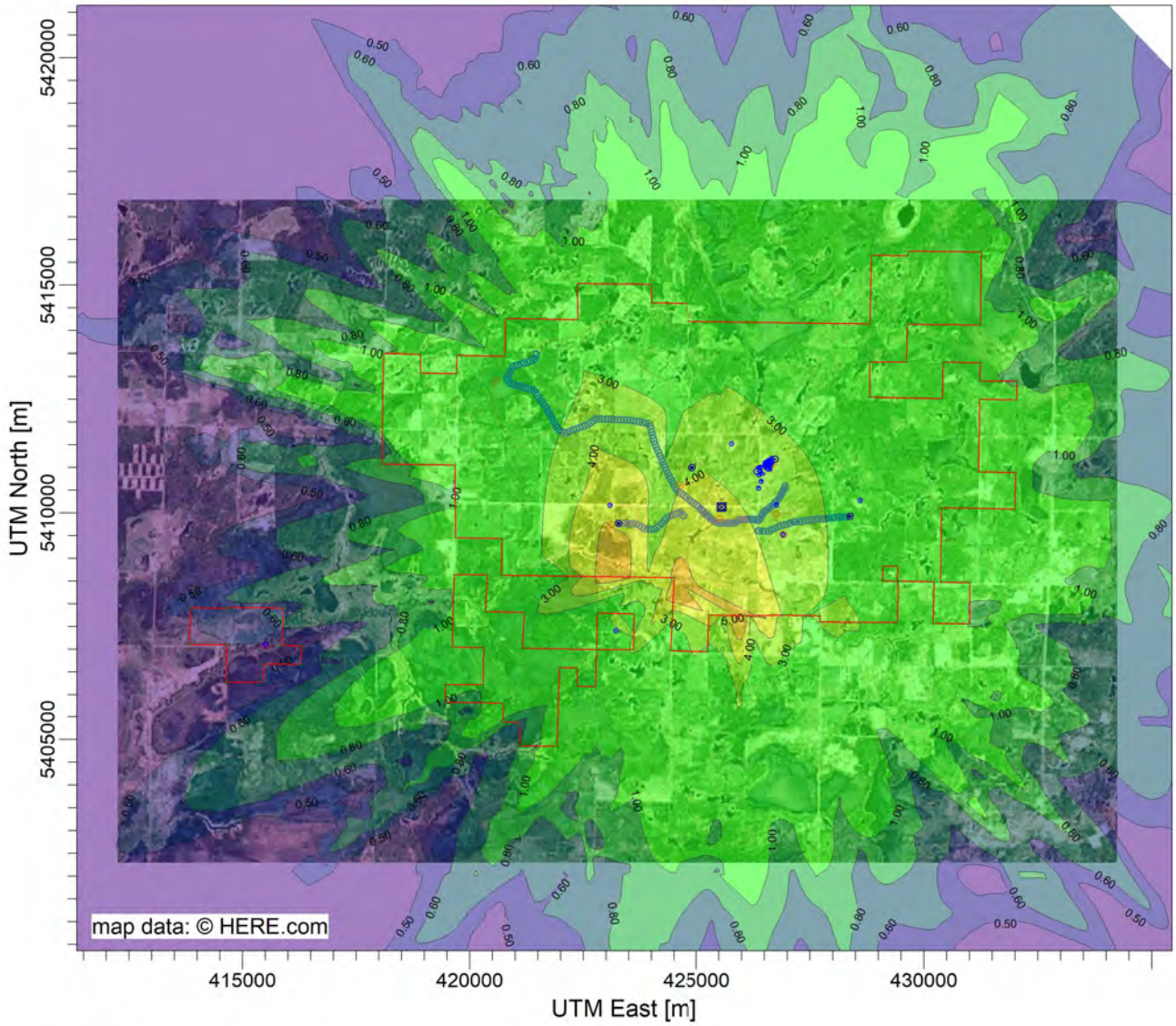

PLOT FILE OF HIGH 1ST HIGH 24-HR VALUES FOR SOURCE GROUP: PIT

ug/m^3

Max: 6.10 [ug/m^3] at (425893.16, 5407696.00)

0.14 0.50 0.60 0.80 1.00 3.00 4.00 5.00 6.00 6.10

COMMENTS:	SOURCES:	COMPANY NAME:	
	30	**Trinity Consultants Ontario**	
	RECEPTORS:	MODELER:	
	8294	**Caleb Stuckless**	
	OUTPUT TYPE:	SCALE: 1:151,430	
	Concentration	0 5 km	
	MAX:	DATE:	PROJECT NO.:
	6.10 ug/m^3	**2021-03-13**	

PROJECT TITLE:

New Gold Rainy River Mine
ESDM Update

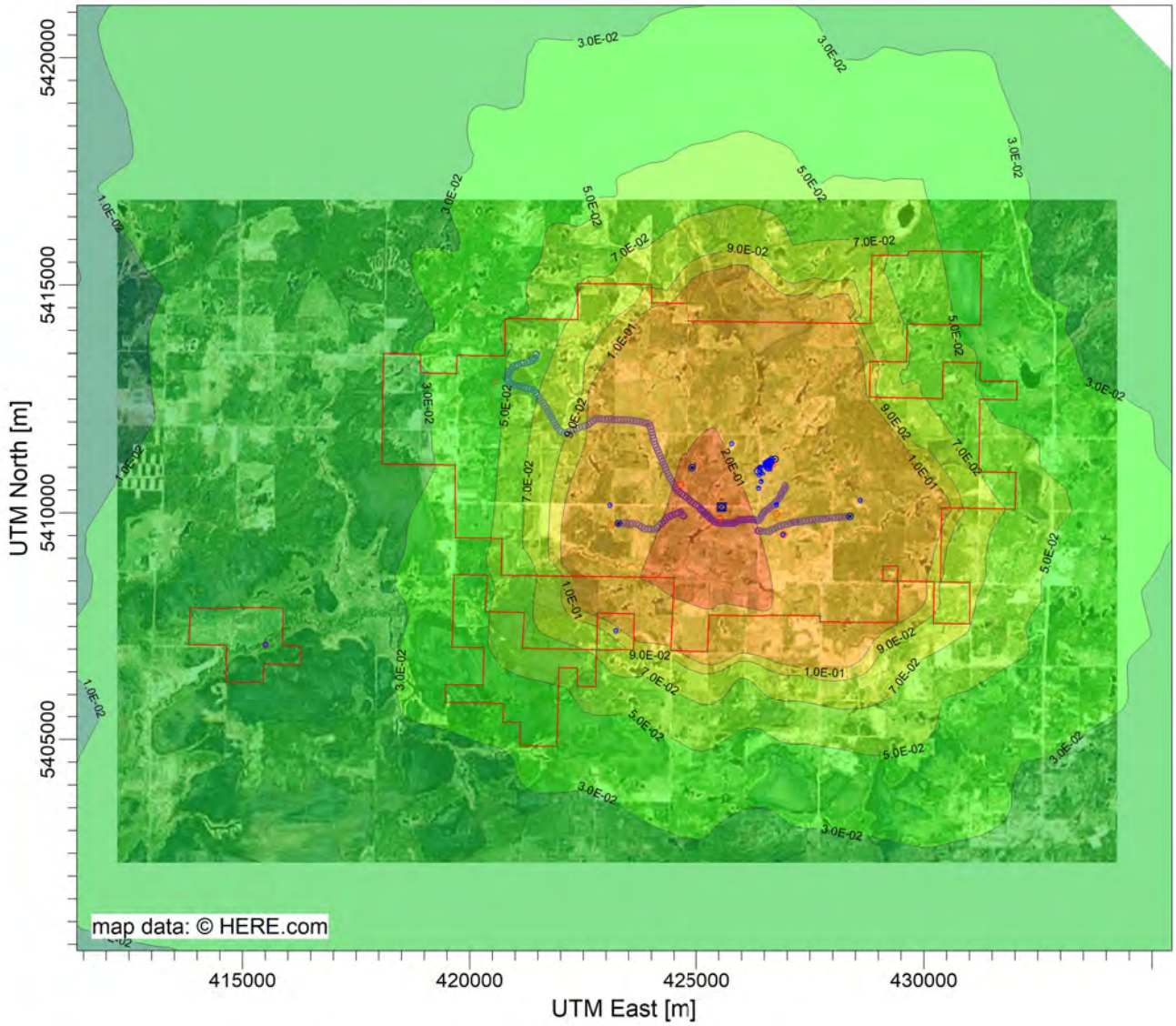

PLOT FILE OF ANNUAL VALUES AVERAGED ACROSS 5 YEARS FOR SOURCE GROUP: PIT ug/m^3

Max: 2.7E-01 [ug/m^3] at (424498.55, 5408579.22)

4.6E-03 5.0E-03 6.0E-03 8.0E-03 1.0E-02 3.0E-02 5.0E-02 7.0E-02 9.0E-02 1.0E-01 2.0E-01 2.7E-01

COMMENTS:	SOURCES:	COMPANY NAME:	
	30	**Trinity Consultants Ontario**	
	RECEPTORS:	MODELER:	
	8294	**Caleb Stuckless**	
	OUTPUT TYPE:	SCALE: 1:151,388	
	Concentration	0 5 km	
	MAX:	DATE:	PROJECT NO.:
	2.7E-01 ug/m^3	**2021-03-13**	

PROJECT TITLE:

New Gold Rainy River Mine
ESDM Update

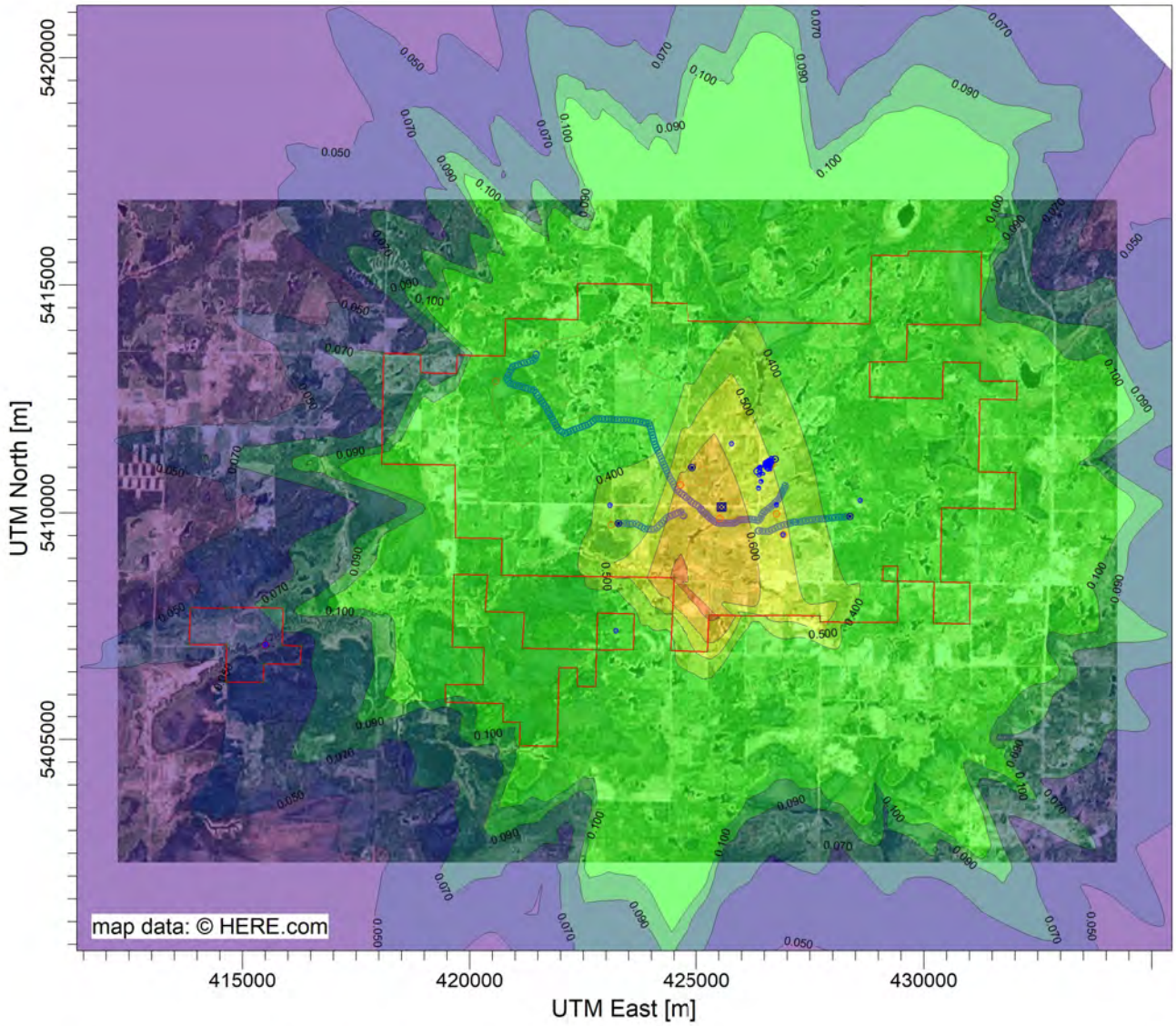

PLOT FILE OF HIGH 1ST HIGH MONTH VALUES FOR SOURCE GROUP: PIT

ug/m^3

Max: 0.851 [ug/m^3] at (425275.95, 5407751.60)

0.014 0.050 0.070 0.090 0.100 0.400 0.500 0.600 0.800 0.851

COMMENTS:	SOURCES:	COMPANY NAME:	
	30	**Trinity Consultants Ontario**	
	RECEPTORS:	MODELER:	
	8294	**Caleb Stuckless**	
	OUTPUT TYPE:	SCALE: 1:151,416	
	Concentration	0 5 km	
	MAX:	DATE:	PROJECT NO.:
	0.851 ug/m^3	**2021-03-13**	

PROJECT TITLE:

New Gold Rainy River Mine
ESDM Update

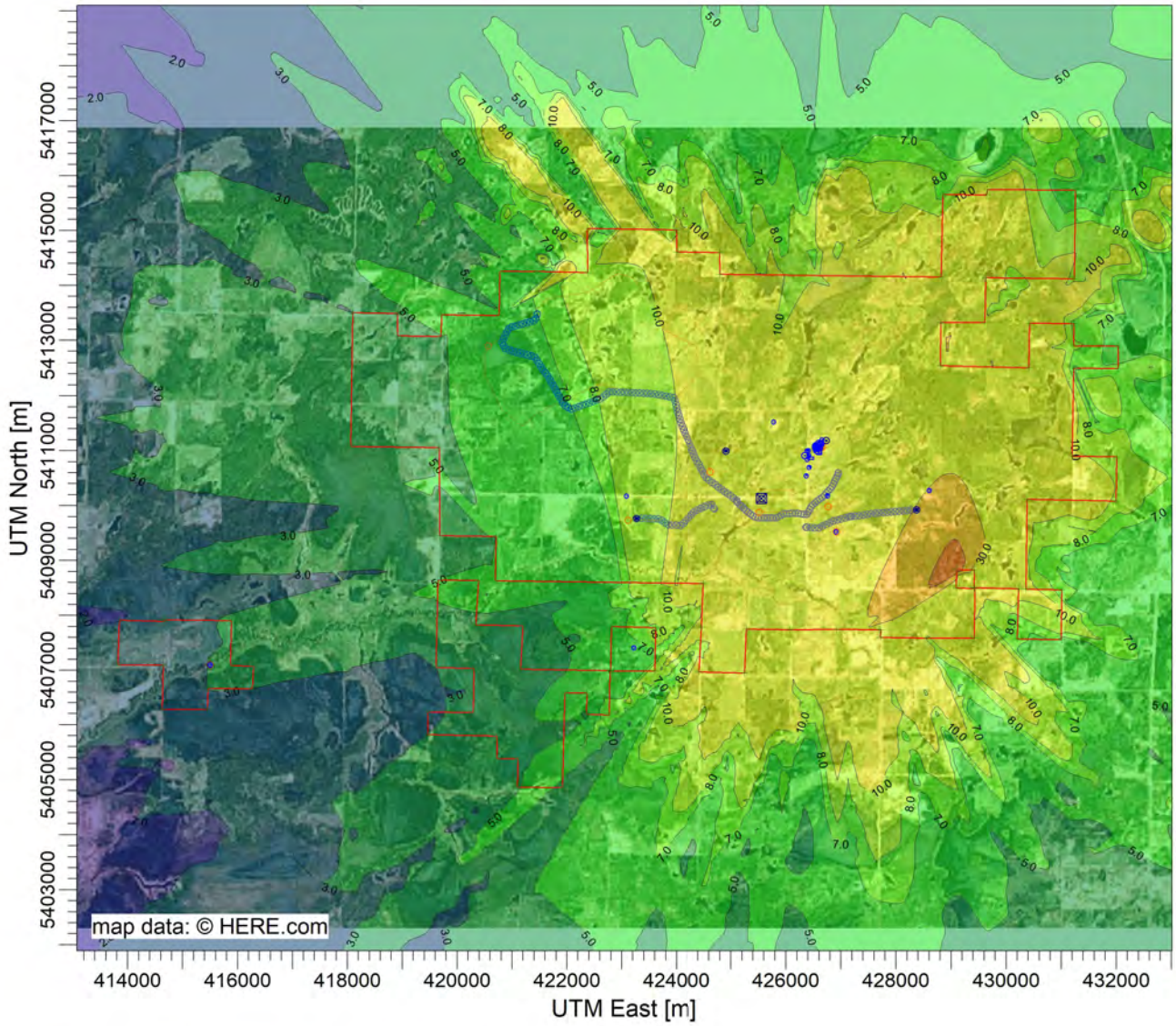

PLOT FILE OF HIGH 1ST HIGH 1-HR VALUES FOR SOURCE GROUP: PORT1 ug/m^3

Max: 44.8 [ug/m^3] at (429130.00, 5408823.00)

0.9 1.0 2.0 3.0 5.0 7.0 8.0 10.0 30.0 40.0 44.8

COMMENTS:	SOURCES:	COMPANY NAME:	
	30	**Trinity Consultants Ontario**	
	RECEPTORS:	MODELER:	
	8294	**Caleb Stuckless**	
	OUTPUT TYPE:	SCALE: 1:125,323	
	Concentration	0 4 km	
	MAX:	DATE:	PROJECT NO.:
	44.8 ug/m^3	**2021-03-13**	

PROJECT TITLE:

New Gold Rainy River Mine
ESDM Update

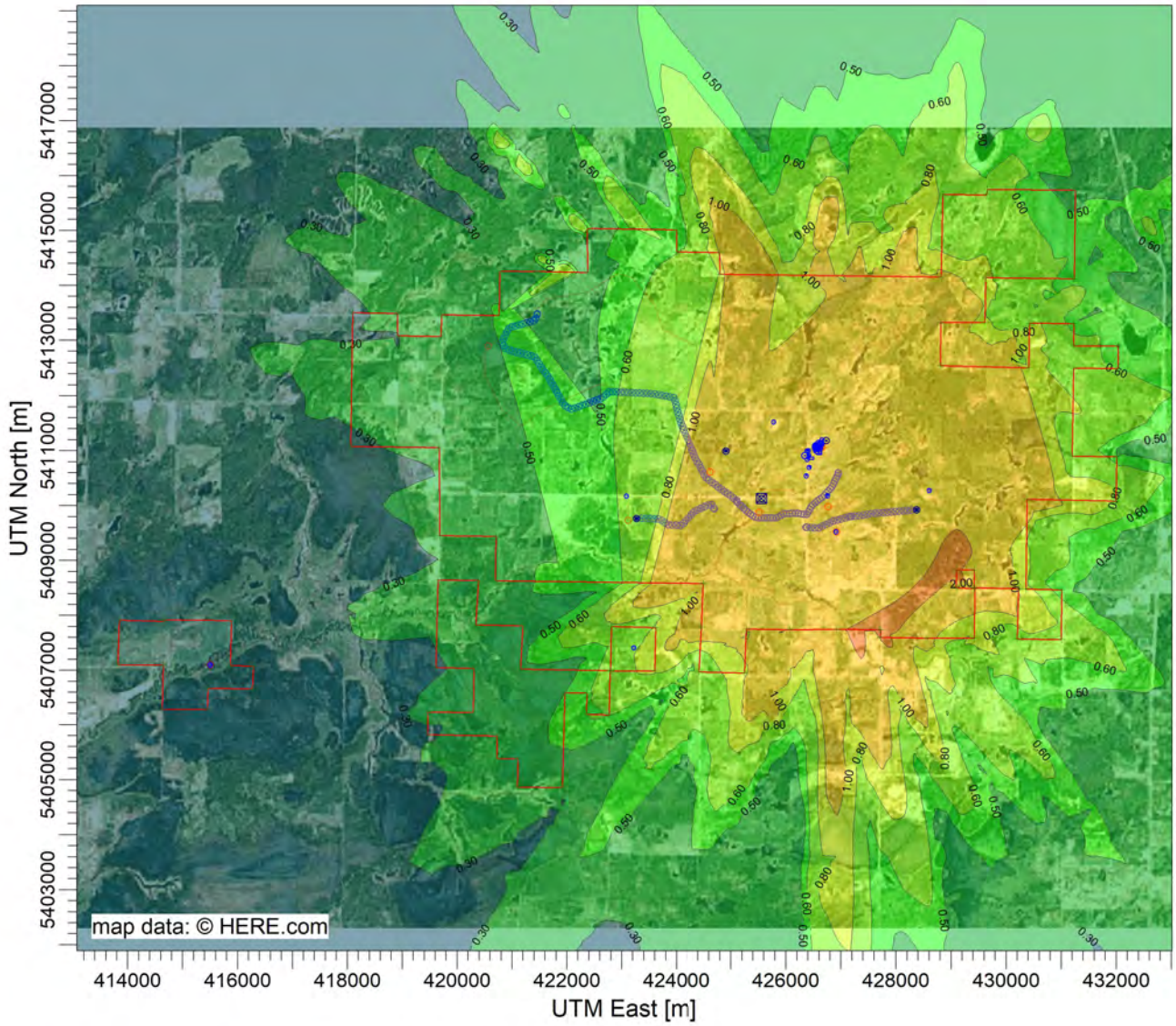

PLOT FILE OF HIGH 1ST HIGH 24-HR VALUES FOR SOURCE GROUP: PORT1 ug/m^3

Max: 2.58 [ug/m^3] at (427264.63, 5407714.00)

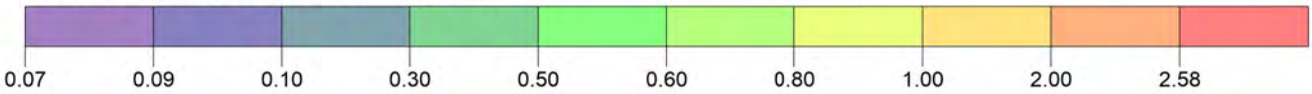

COMMENTS:	SOURCES:	COMPANY NAME:	
	30	**Trinity Consultants Ontario**	
	RECEPTORS:	MODELER:	
	8294	**Caleb Stuckless**	
	OUTPUT TYPE:	SCALE: 1:125,323	
	Concentration	0 4 km	
	MAX:	DATE:	PROJECT NO.:
	2.58 ug/m^3	**2021-03-13**	

PROJECT TITLE:

New Gold Rainy River Mine
ESDM Update

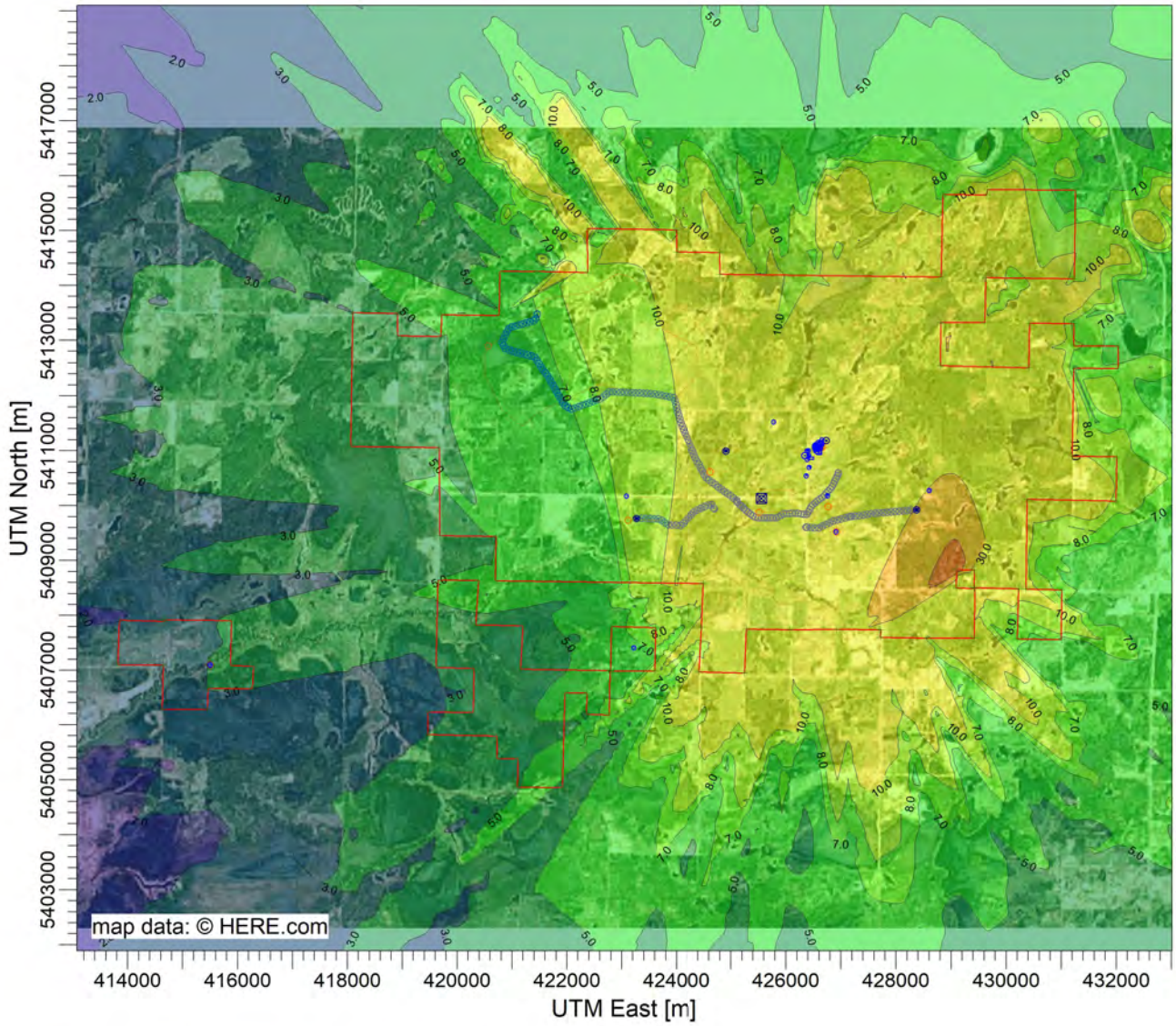

PLOT FILE OF HIGH 1ST HIGH 1-HR VALUES FOR SOURCE GROUP: PORT2 ug/m^3

Max: 44.8 [ug/m^3] at (429130.00, 5408823.00)

0.9 1.0 2.0 3.0 5.0 7.0 8.0 10.0 30.0 40.0 44.8

COMMENTS:	SOURCES:	COMPANY NAME:	
	30	**Trinity Consultants Ontario**	
	RECEPTORS:	MODELER:	
	8294	**Caleb Stuckless**	
	OUTPUT TYPE:	SCALE: 1:125,323	
	Concentration	0 4 km	
	MAX:	DATE:	PROJECT NO.:
	44.8 ug/m^3	**2021-03-13**	

PROJECT TITLE:

New Gold Rainy River Mine
ESDM Update

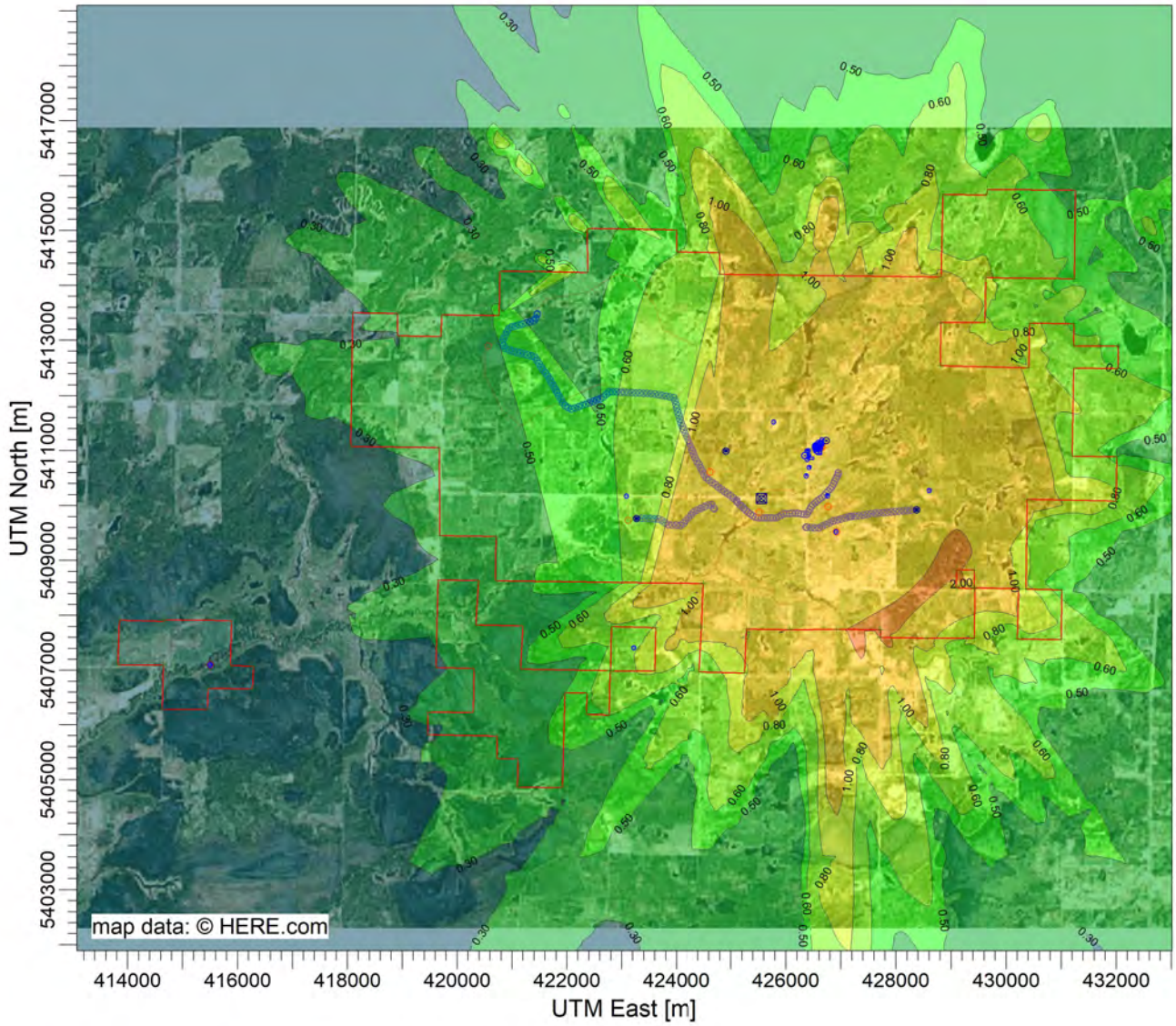

PLOT FILE OF HIGH 1ST HIGH 24-HR VALUES FOR SOURCE GROUP: PORT2 ug/m^3

Max: 2.58 [ug/m^3] at (427264.63, 5407714.00)

0.07 0.09 0.10 0.30 0.50 0.60 0.80 1.00 2.00 2.58

COMMENTS:	SOURCES:	COMPANY NAME:	
	30	**Trinity Consultants Ontario**	
	RECEPTORS:	MODELER:	
	8294	**Caleb Stuckless**	
	OUTPUT TYPE:	SCALE: 1:125,323	
	Concentration	0 4 km	
	MAX:	DATE:	PROJECT NO.:
	2.58 ug/m^3	**2021-03-13**	

PROJECT TITLE:

New Gold Rainy River Mine
ESDM Update

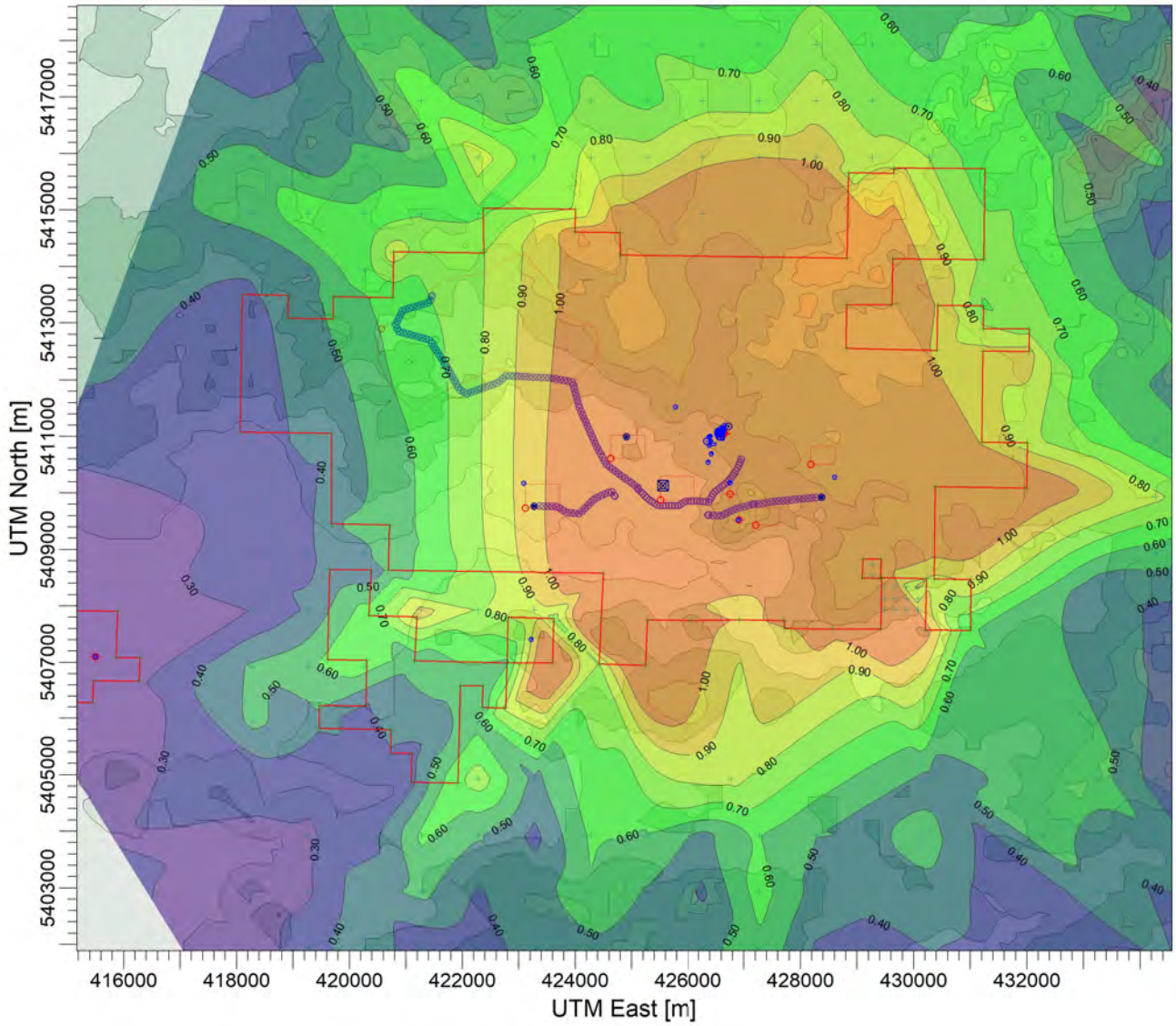

PLOT FILE OF HIGH 1ST HIGH 24-HR VALUES FOR SOURCE GROUP: SPACEHEA

ug/m^3

Max: 1.73 [ug/m^3] at (428808.13, 5412548.18)

0.18 0.30 0.40 0.50 0.60 0.70 0.80 0.90 1.00 1.73

COMMENTS:	SOURCES:	COMPANY NAME:	
	33	**Trinity Consultants Ontario**	
	RECEPTORS:	MODELER:	
	1871	**Caleb Stuckless**	
	OUTPUT TYPE:	SCALE: 1:121,879	
	Concentration	0 4 km	
	MAX:	DATE:	PROJECT NO.:
	1.73 ug/m^3	**2021-03-24**	

PROJECT TITLE:

New Gold Rainy River Mine
ESDM Update

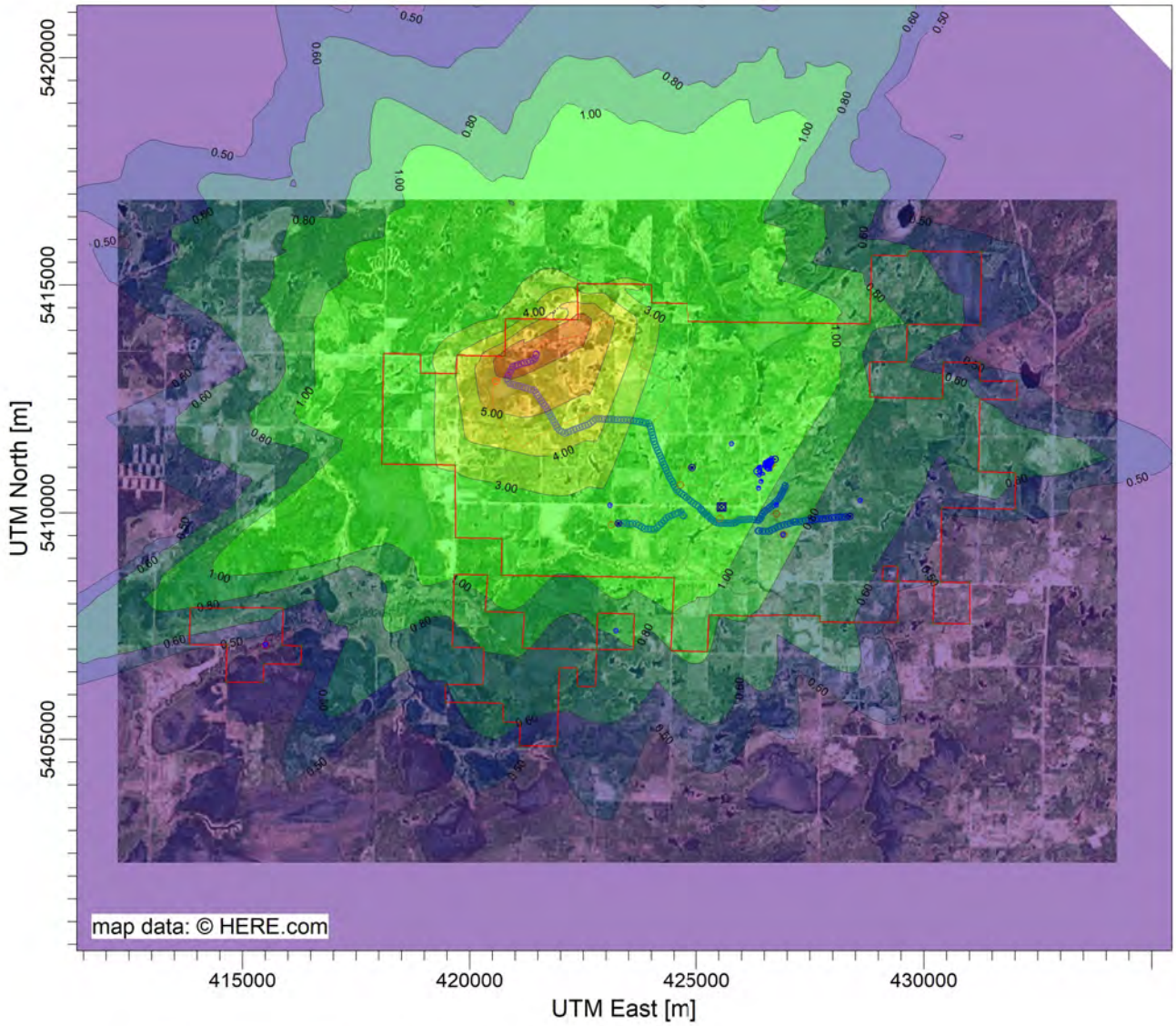

PLOT FILE OF HIGH 1ST HIGH 24-HR VALUES FOR SOURCE GROUP: TMA

ug/m^3

Max: 6.61 [ug/m^3] at (420766.99, 5413450.09)

0.10 0.50 0.60 0.80 1.00 3.00 4.00 5.00 6.00 6.61

COMMENTS:	SOURCES:	COMPANY NAME:	
	30	**Trinity Consultants Ontario**	
	RECEPTORS:	MODELER:	
	8294	**Caleb Stuckless**	
	OUTPUT TYPE:	SCALE: 1:151,430	
	Concentration	0 5 km	
	MAX:	DATE:	PROJECT NO.:
	6.61 ug/m^3	**2021-03-13**	

PROJECT TITLE:

New Gold Rainy River Mine
ESDM Update

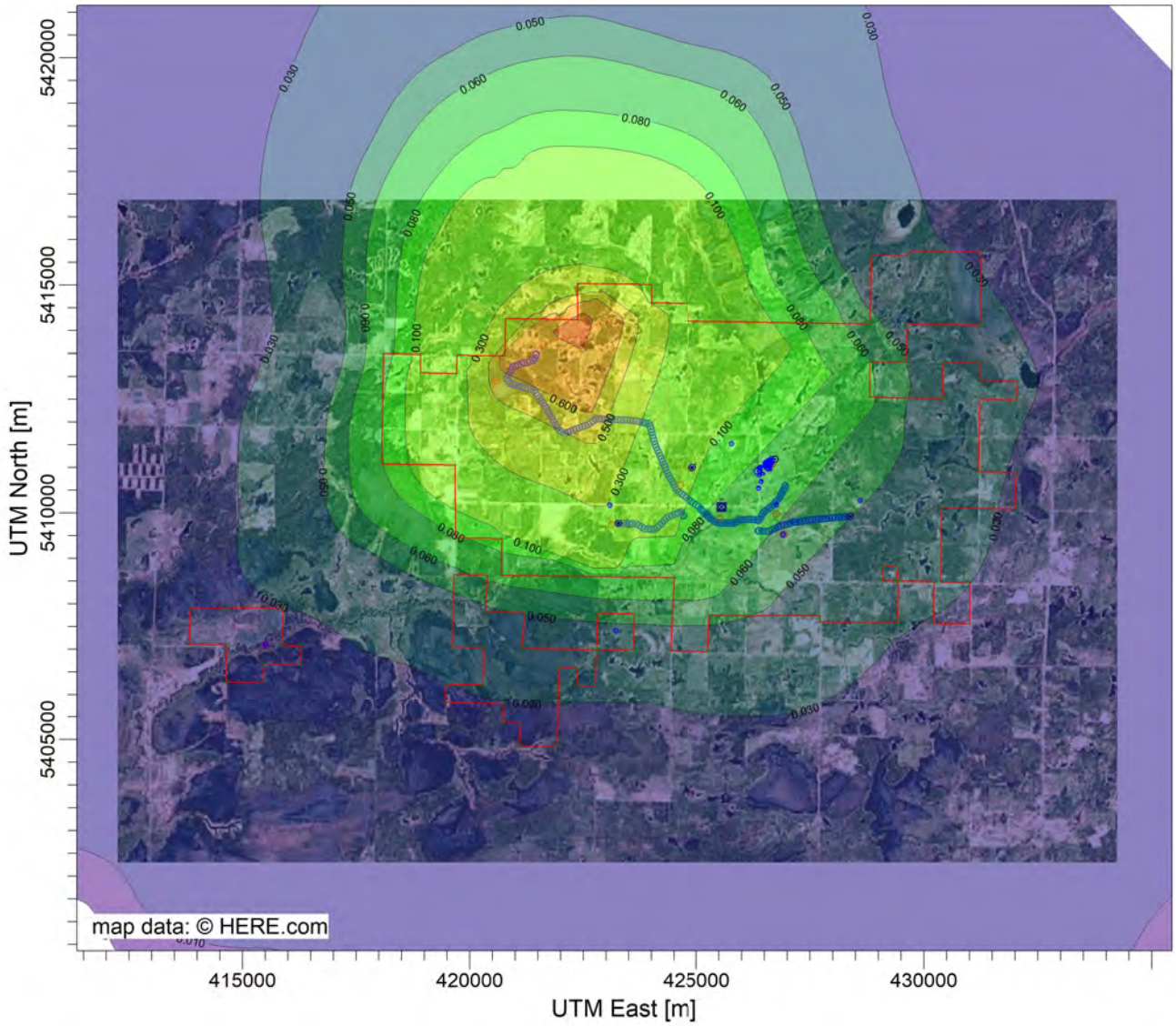

PLOT FILE OF ANNUAL VALUES AVERAGED ACROSS 5 YEARS FOR SOURCE GROUP: TMA ug/m^3

Max: 0.893 [ug/m^3] at (422376.63, 5414238.38)

0.009 0.010 0.030 0.050 0.060 0.080 0.100 0.300 0.500 0.600 0.800 0.893

COMMENTS:	SOURCES:	COMPANY NAME:	
	30	**Trinity Consultants Ontario**	
	RECEPTORS:	MODELER:	
	8294	**Caleb Stuckless**	
	OUTPUT TYPE:	SCALE: 1:151,416	
	Concentration	0 5 km	
	MAX:	DATE:	PROJECT NO.:
	0.893 ug/m^3	**2021-03-13**	

PROJECT TITLE:

New Gold Rainy River Mine
ESDM Update

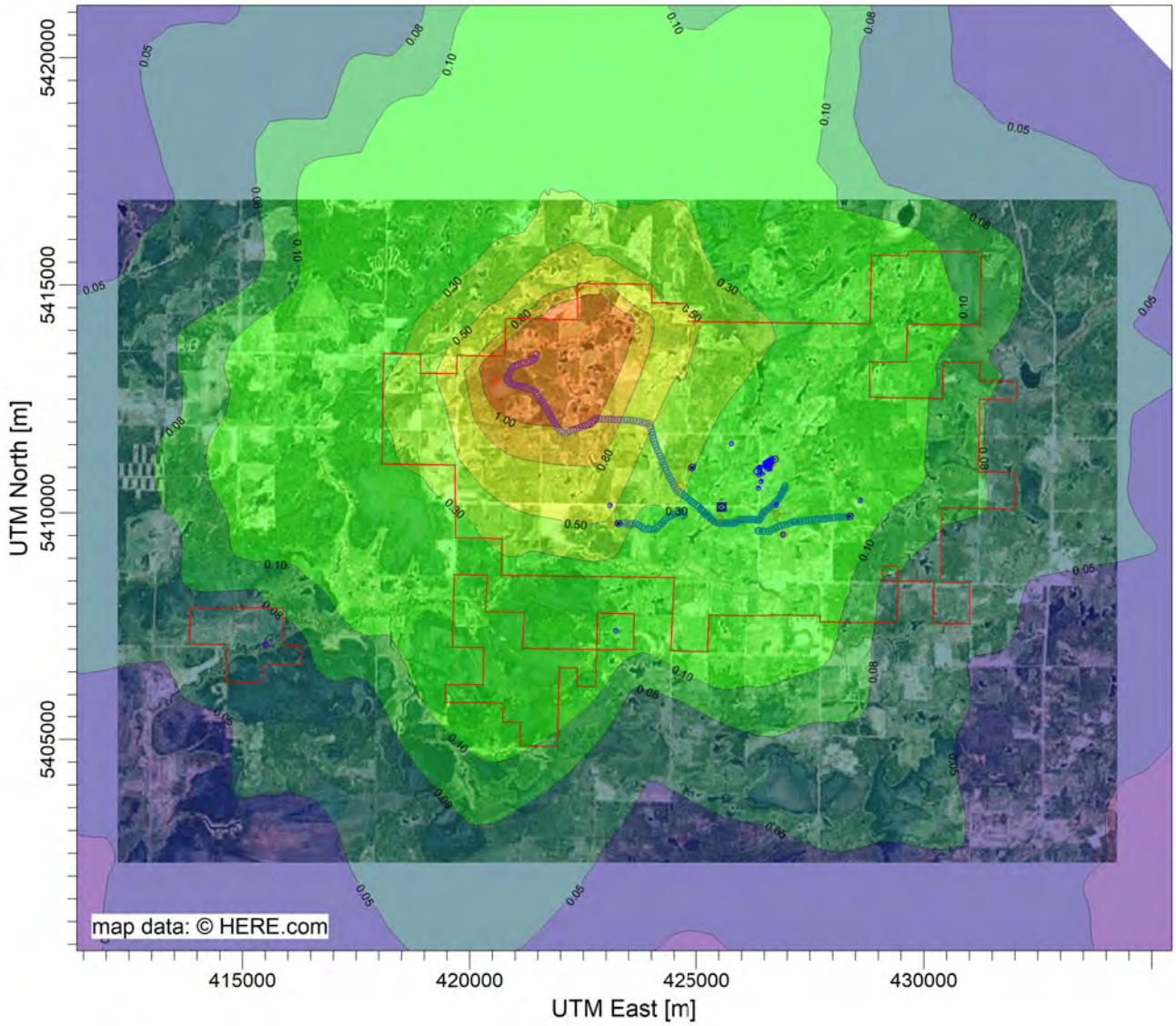

PLOT FILE OF HIGH 1ST HIGH MONTH VALUES FOR SOURCE GROUP: TMA

ug/m^3

Max: 1.57 [ug/m^3] at (422376.63, 5414238.38)

0.02 0.03 0.05 0.08 0.10 0.30 0.50 0.80 1.00 1.57

COMMENTS:	SOURCES:	COMPANY NAME:	
	30	**Trinity Consultants Ontario**	
	RECEPTORS:	MODELER:	
	8294	**Caleb Stuckless**	
	OUTPUT TYPE:	SCALE: 1:151,430	
	Concentration	0 5 km	
	MAX:	DATE:	PROJECT NO.:
	1.57 ug/m^3	**2021-03-13**	

PROJECT TITLE:

New Gold Rainy River Mine
ESDM Update

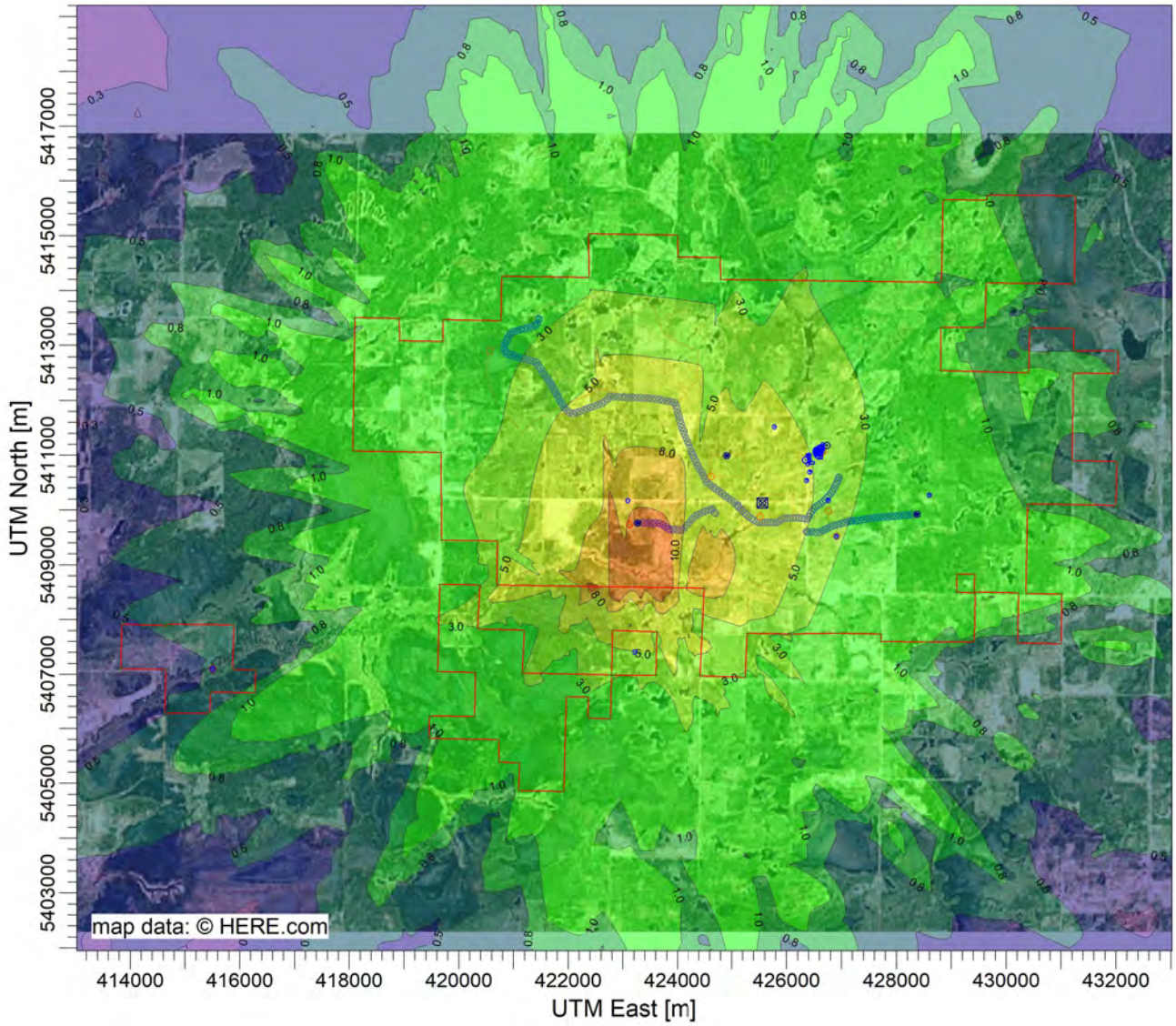

PLOT FILE OF HIGH 1ST HIGH 24-HR VALUES FOR SOURCE GROUP: UNL_NPAG ug/m^3

Max: 14.1 [ug/m^3] at (422928.00, 5408593.00)

0.1 0.3 0.5 0.8 1.0 3.0 5.0 8.0 10.0 14.1

COMMENTS:	SOURCES:	COMPANY NAME:	
	30	**Trinity Consultants Ontario**	
	RECEPTORS:	MODELER:	
	8294	**Caleb Stuckless**	
	OUTPUT TYPE:	SCALE: 1:125,679	
	Concentration	0 4 km	
	MAX:	DATE:	PROJECT NO.:
	14.1 ug/m^3	**2021-03-13**	

PROJECT TITLE:

New Gold Rainy River Mine
ESDM Update

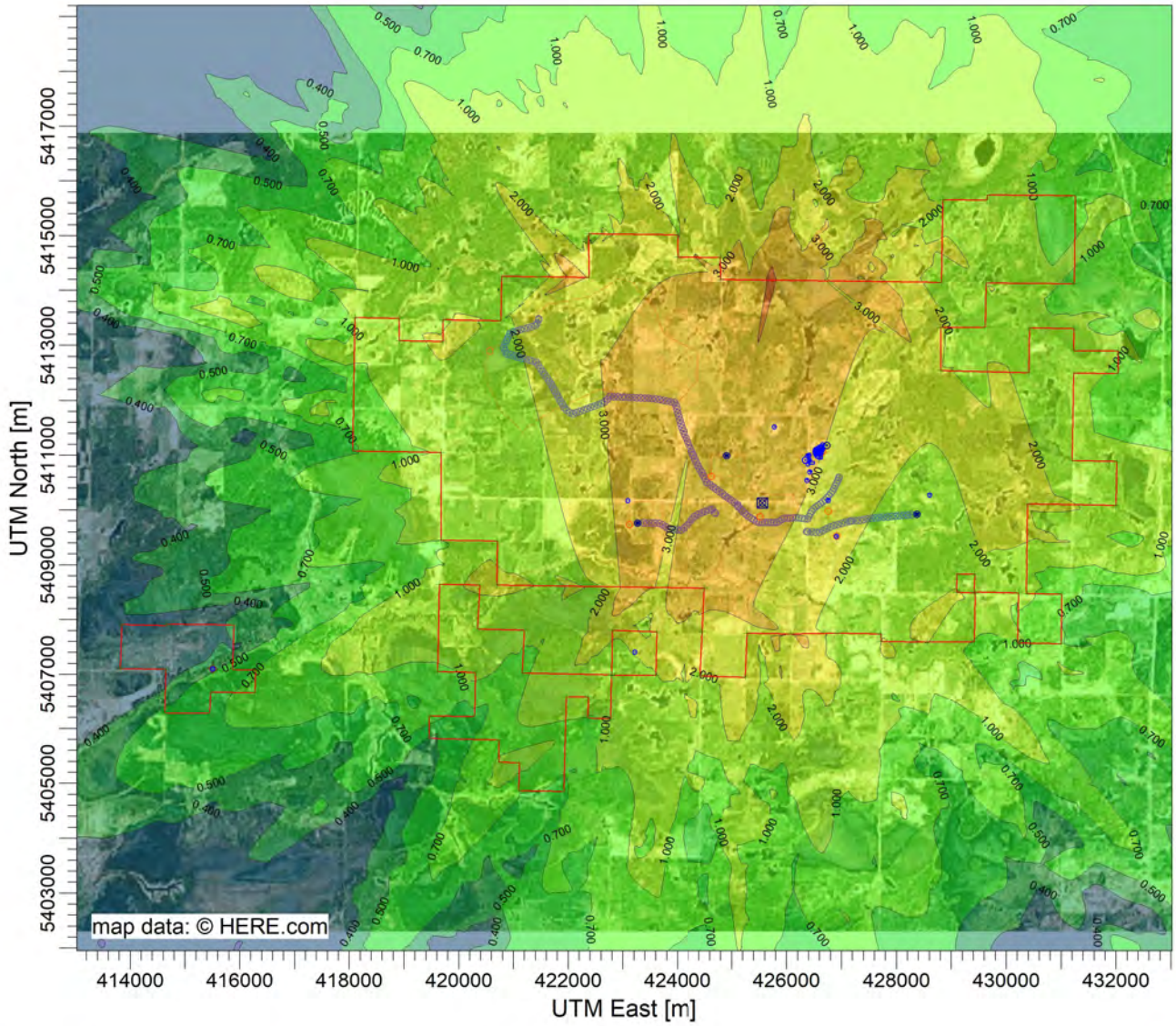

PLOT FILE OF HIGH 1ST HIGH 24-HR VALUES FOR SOURCE GROUP: UNL_OB

ug/m^3

Max: 5.479 [ug/m^3] at (425728.00, 5414193.00)

0.098 0.100 0.200 0.400 0.500 0.700 1.000 2.000 3.000 5.000 5.479

COMMENTS:	SOURCES:	COMPANY NAME:	
	30	**Trinity Consultants Ontario**	
	RECEPTORS:	MODELER:	
	8294	**Caleb Stuckless**	
	OUTPUT TYPE:	SCALE: 1:125,668	
	Concentration	0 4 km	
	MAX:	DATE:	PROJECT NO.:
	5.479 ug/m^3	**2021-03-13**	

PROJECT TITLE:

New Gold Rainy River Mine
ESDM Update

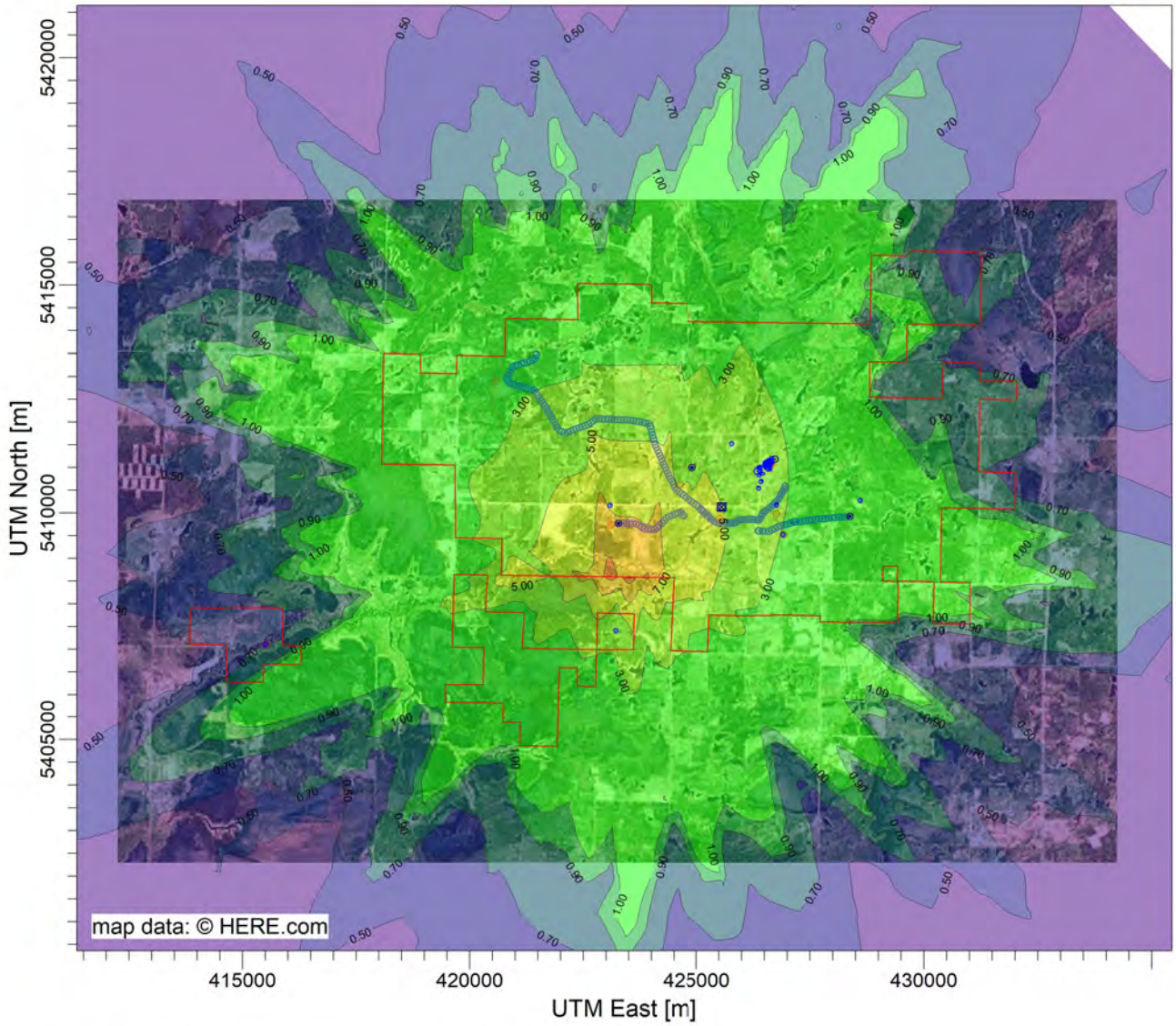

PLOT FILE OF HIGH 1ST HIGH 24-HR VALUES FOR SOURCE GROUP: WMRS

ug/m^3

Max: 9.84 [ug/m^3] at (423514.63, 5408569.00)

0.15 0.50 0.70 0.90 1.00 3.00 5.00 7.00 9.00 9.84

COMMENTS:	SOURCES:	COMPANY NAME:	
	30	**Trinity Consultants Ontario**	
	RECEPTORS:	MODELER:	
	8294	**Caleb Stuckless**	
	OUTPUT TYPE:	SCALE: 1:151,430	
	Concentration	0 5 km	
	MAX:	DATE:	PROJECT NO.:
	9.84 ug/m^3	**2021-03-13**	

PROJECT TITLE:

New Gold Rainy River Mine
ESDM Update

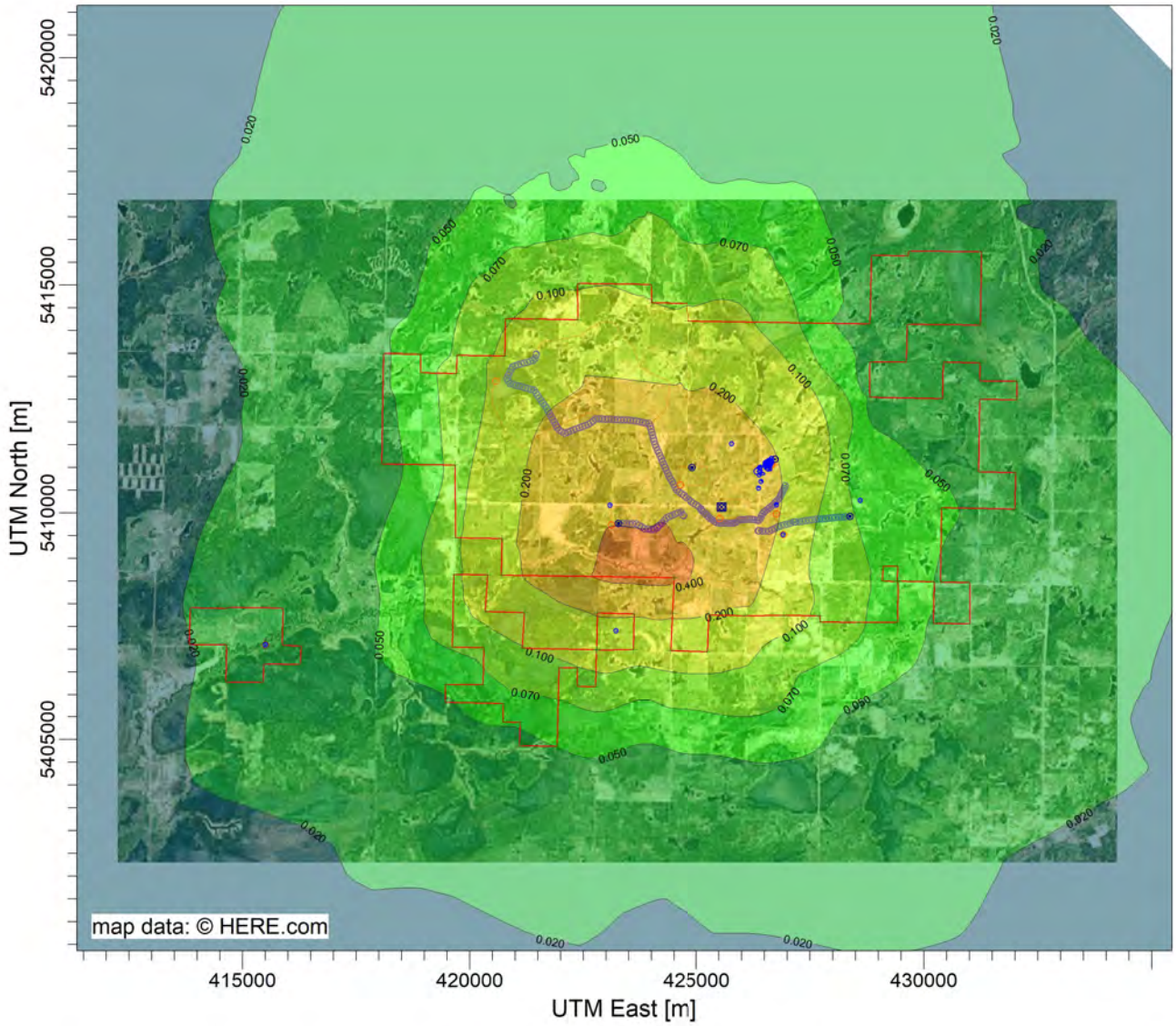

PLOT FILE OF ANNUAL VALUES AVERAGED ACROSS 5 YEARS FOR SOURCE GROUP: WMRS ug/m^3

Max: 0.481 [ug/m^3] at (424091.53, 5408569.00)

0.006 0.009 0.010 0.020 0.050 0.070 0.100 0.200 0.400 0.481

COMMENTS:	SOURCES:	COMPANY NAME:	
	30	**Trinity Consultants Ontario**	
	RECEPTORS:	MODELER:	
	8294	**Caleb Stuckless**	
	OUTPUT TYPE:	SCALE: 1:151,416	
	Concentration	0 5 km	
	MAX:	DATE:	PROJECT NO.:
	0.481 ug/m^3	**2021-03-13**	

PROJECT TITLE:

New Gold Rainy River Mine
ESDM Update

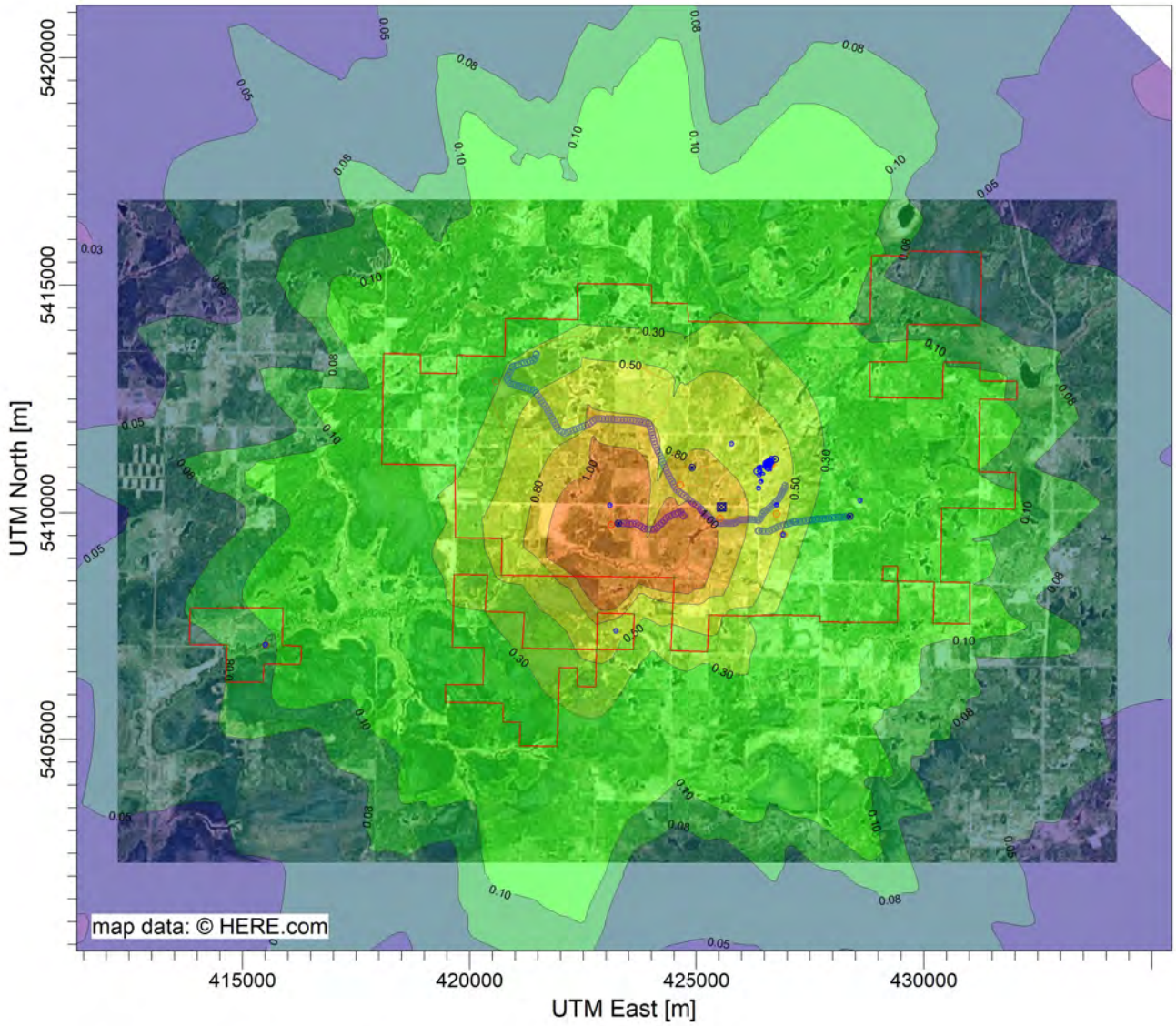

PLOT FILE OF HIGH 1ST HIGH MONTH VALUES FOR SOURCE GROUP: WMRS

ug/m^3

Max: 1.92 [ug/m^3] at (423128.00, 5408593.00)

0.02 0.03 0.05 0.08 0.10 0.30 0.50 0.80 1.00 1.92

COMMENTS:	SOURCES:	COMPANY NAME:	
	30	**Trinity Consultants Ontario**	
	RECEPTORS:	MODELER:	
	8294	**Caleb Stuckless**	
	OUTPUT TYPE:	SCALE: 1:151,430	
	Concentration	0 5 km	
	MAX:	DATE:	PROJECT NO.:
	1.92 ug/m^3	**2021-03-13**	

PROJECT TITLE:

New Gold Rainy River Mine
ESDM Update

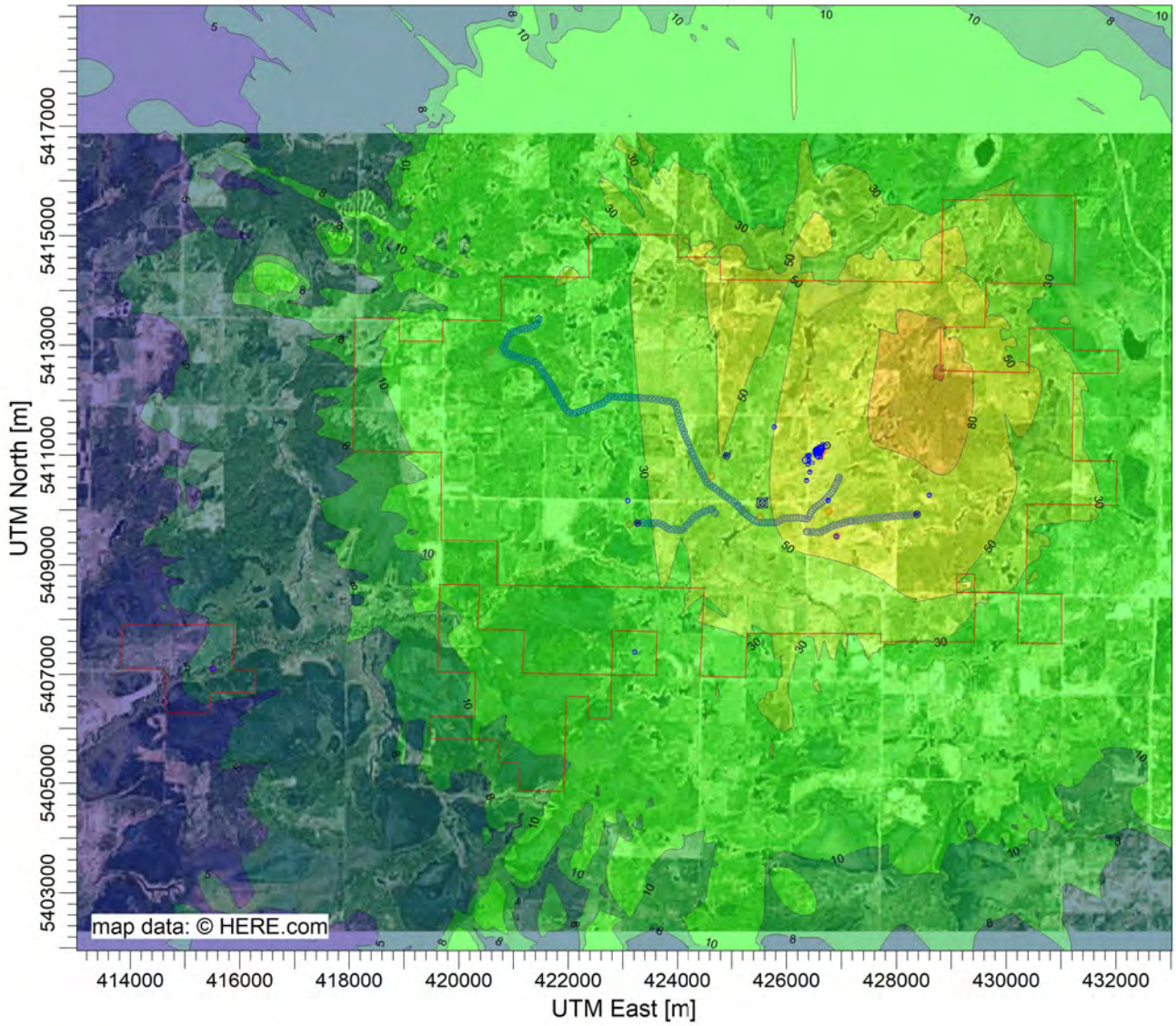

PLOT FILE OF HIGH 1ST HIGH 1-HR VALUES FOR SOURCE GROUP: WPS

ug/m^3

Max: 102 [ug/m^3] at (428808.13, 5412548.18)

1 3 5 8 10 30 50 80 100 102

COMMENTS:	SOURCES:	COMPANY NAME:	
	30	**Trinity Consultants Ontario**	
	RECEPTORS:	MODELER:	
	8294	**Caleb Stuckless**	
	OUTPUT TYPE:	SCALE: 1:125,685	
	Concentration	0 4 km	
	MAX:	DATE:	PROJECT NO.:
	102 ug/m^3	**2021-03-13**	

PROJECT TITLE:

New Gold Rainy River Mine
ESDM Update

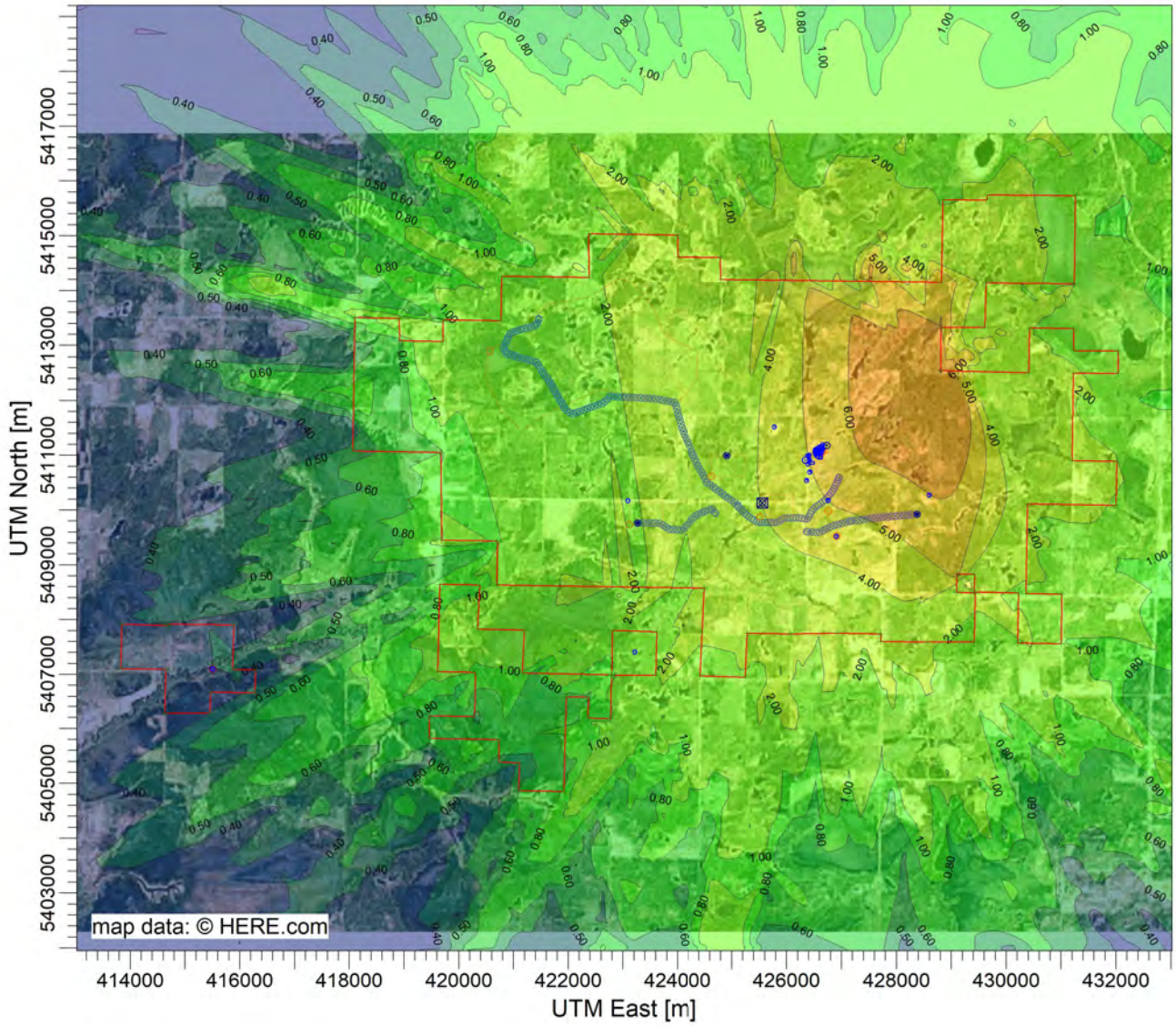

PLOT FILE OF HIGH 1ST HIGH 24-HR VALUES FOR SOURCE GROUP: WPS

ug/m^3

Max: 8.03 [ug/m^3] at (428808.13, 5412548.18)

0.09 0.10 0.20 0.40 0.50 0.60 0.80 1.00 2.00 4.00 5.00 6.00 8.00 8.03

COMMENTS:	SOURCES:	COMPANY NAME:	
	30	**Trinity Consultants Ontario**	
	RECEPTORS:	MODELER:	
	8294	**Caleb Stuckless**	
	OUTPUT TYPE:	SCALE: 1:125,679	
	Concentration	0 4 km	
	MAX:	DATE:	PROJECT NO.:
	8.03 ug/m^3	**2021-03-13**	

*** THE MAXIMUM 100 1-HR AVERAGE CONCENTRATION VALUES FOR SOURCE GROUP: BLAST ***

RANK BY	YEAR	RANK	CONC	YYYYMMDDHH	XR	YR	TYPE	Ontario F
1	1997	1	68.01326	1997121003	426068.33	5407739.8	DC	Discarde
1	1998	2	66.77058	1998122010	426068.33	5407739.8	DC	Discarde
1	1999	3	65.97583	1999011912	425991.84	5407696	DC	Discarde
1	2000	5	65.65586	2000120604	426189.22	5407696	DC	Discarde
2	1997	4	65.86208	1997121003	426090.53	5407600	DC	Discarde
2	1998	8	64.69993	1998122010	426090.53	5407600	DC	Discarde
2	1999	17	62.80488	1999011912	426068.33	5407739.8	DC	Discarde
2	2000	9	64.55662	2000120604	426189.22	5407600	DC	Discarde
3	1997	6	65.63193	1997122919	426189.22	5407696	DC	Discarde
3	1998	15	63.0984	1998122010	426090.53	5407696	DC	Discarde
3	1999	18	62.30133	1999011912	426090.53	5407600	DC	Discarde
3	2000	12	63.9533	2000020709	426287.91	5407600	DC	Discarde
4	1997	7	64.74787	1997120707	425794.47	5407696	DC	Discarde
4	1998	29	59.81178	1998122010	426090.53	5407504	DC	Discarde
4	1999	21	61.49319	1999011912	426090.53	5407504	DC	Discarde
4	2000	13	63.5408	2000020709	426287.91	5407696	DC	Discarde
5	1997	10	64.51215	1997122919	426189.22	5407600	DC	Discarde
5	1998	39	57.62369	1998122010	426128	5407693	DC	Discarde
5	1999	28	59.83246	1999011912	425991.84	5407600	DC	Discarde
5	2000	22	61.32838	2000120604	426128	5407693	DC	Discarde
6	1997	11	64.28026	1997121003	426090.53	5407696	DC	Discarde
6	1998	55	54.4084	1998052403	426386.59	5407696	DC	Discarde
6	1999	34	58.68127	1999011912	426090.53	5407407.5	DC	Discarde
6	2000	26	60.73022	2000120604	426189.22	5407504	DC	Discarde
7	1997	14	63.36763	1997120707	425794.47	5407600	DC	Discarde
7	1998	57	54.17919	1998122010	426090.53	5407407.5	DC	Discarde
7	1999	45	56.39505	1999011912	426090.53	5407696	DC	Discarde
7	2000	27	60.14374	2000020709	426287.91	5407504	DC	Discarde
8	1997	16	63.08301	1997122906	426386.59	5407696	DC	Discarde
8	1998	78	53.05814	1998122010	425991.84	5407696	DC	Discarde
8	1999	46	56.27684	1999011912	426090.53	5407311.5	DC	Discarde
8	2000	31	59.34396	2000041004	426189.22	5407696	DC	Discarde
9	1997	19	61.66852	1997042424	425991.84	5407696	DC	Discarde
9	1998	84	52.72449	1998122010	426189.22	5407215.5	DC	Discarde
9	1999	58	54.1344	1999011912	426128	5407193	DC	Discarde
9	2000	38	58.18205	2000041004	426189.22	5407600	DC	Discarde
10	1997	20	61.63851	1997032704	426068.33	5407739.8	DC	Discarde
10	1998	86	52.68069	1998122010	426189.22	5407407.5	DC	Discarde
10	1999	76	53.20802	1999011912	426090.53	5407215.5	DC	Discarde
10	2000	40	57.40559	2000020709	426189.22	5407696	DC	Discarde
11	1997	23	61.25271	1997122919	426128	5407693	DC	Discarde
11	1998	90	52.3084	1998122010	426189.22	5407504	DC	Discarde
11	1999	85	52.7081	1999011912	425991.84	5407504	DC	Discarde
11	2000	44	56.65375	2000041004	426128	5407693	DC	Discarde
12	1997	24	60.84437	1997121003	426090.53	5407504	DC	Discarde
12	1998	91	52.30138	1998080304	425991.84	5407696	DC	Discarde

12	1999	95	52.14532	1999122322	424380	5408573	DC	Discarde
12	2000	52	54.67221	2000050704	425991.84	5407696	DC	Discarde
13	1997	25	60.77909	1997122919	426189.22	5407504	DC	Discarde
13	1998	97	52.06099	1998122010	426189.22	5407119	DC	Discarde
13	1999	100	51.96733	1999122320	425628	5407693	DC	Discarde
13	2000	61	53.83551	2000041004	426189.22	5407504	DC	Discarde
14	1997	30	59.80048	1997120707	425794.47	5407504	DC	Discarde
14	2000	64	53.67591	2000120604	426189.22	5407407.5	DC	Discarde
15	1997	32	59.08497	1997122906	426386.59	5407600	DC	Discarde
15	2000	74	53.29723	2000120604	426287.91	5407215.5	DC	Discarde
16	1997	33	58.85431	1997032704	426090.53	5407696	DC	Discarde
16	2000	75	53.29383	2000050704	426068.33	5407739.8	DC	Discarde
17	1997	35	58.61926	1997032704	426090.53	5407600	DC	Discarde
17	2000	77	53.19923	2000111118	426068.33	5407739.8	DC	Discarde
18	1997	36	58.60312	1997042424	425991.84	5407600	DC	Discarde
18	2000	88	52.65453	2000020709	426386.59	5407215.5	DC	Discarde
19	1997	37	58.48767	1997121003	426128	5407693	DC	Discarde
19	2000	93	52.21595	2000020709	426287.91	5407407.5	DC	Discarde
20	1997	41	56.82737	1997122905	425695.78	5407696	DC	Discarde
20	2000	99	51.96988	2000120604	426287.91	5407407.5	DC	Discarde
21	1997	42	56.78303	1997032705	425991.84	5407600	DC	Discarde
22	1997	43	56.6856	1997032705	425991.84	5407696	DC	Discarde
23	1997	47	56.26602	1997032705	425893.16	5407696	DC	Discarde
24	1997	48	56.10186	1997020406	425695.78	5407696	DC	Highest
25	1997	49	55.11291	1997122905	425695.78	5407600	DC	
26	1997	50	55.04714	1997121003	426090.53	5407407.5	DC	
27	1997	51	54.70375	1997120707	425794.47	5407407.5	DC	
28	1997	53	54.60438	1997122721	424314.22	5407696	DC	
29	1997	54	54.54755	1997122906	426485.25	5407504	DC	
30	1997	56	54.38914	1997020406	425695.78	5407600	DC	
31	1997	59	53.89598	1997122824	426485.25	5407696	DC	
32	1997	60	53.83847	1997122721	424215.53	5407600	DC	
33	1997	62	53.79052	1997122919	426189.22	5407407.5	DC	
34	1997	63	53.67786	1997121003	426189.22	5407215.5	DC	
35	1997	65	53.66136	1997032705	425991.84	5407504	DC	
36	1997	66	53.6085	1997032704	426128	5407693	DC	
37	1997	67	53.60103	1997122906	426485.25	5407600	DC	
38	1997	68	53.53039	1997120716	424480	5408473	DC	
39	1997	69	53.52478	1997121003	425991.84	5407696	DC	
40	1997	70	53.48775	1997121003	426189.22	5407407.5	DC	
41	1997	71	53.48237	1997122905	425628	5407693	DC	
42	1997	72	53.47225	1997120716	424480	5408423	DC	
43	1997	73	53.34153	1997122919	426287.91	5407215.5	DC	
44	1997	79	53.00603	1997121003	426189.22	5407119	DC	
45	1997	80	52.92856	1997121003	426189.22	5407504	DC	
46	1997	81	52.88337	1997042424	425991.84	5407504	DC	
47	1997	82	52.83309	1997121003	426189.22	5407311.5	DC	
48	1997	83	52.77297	1997032704	426090.53	5407504	DC	
49	1997	87	52.67992	1997020406	425628	5407693	DC	

*** THE MAXIMUM 100 24-HR AVERAGE CONCENTRATION VALUES FOR SOURCE GROUP: BLAST ***

RANK BY	YEAR	RANK	CONC	YYYYMMDDHH	XR	YR	TYPE	Ontario F
1	1996	55	5.24135	1996050424	424498.55	5408579.22	DC	Discarde
1	1997	51	5.27761	1997022324	424430	5408573	DC	Discarde
1	1998	1	7.60807	1998022024	424480	5408573	DC	Discarde
1	1999	16	6.33083	1999061124	425695.78	5407696	DC	Discarde
1	2000	18	6.11517	2000120624	426189.22	5407696	DC	Discarde
2	1996	58	5.22434	1996050424	424480	5408573	DC	Discarde
2	1997	56	5.22912	1997022324	424380	5408573	DC	Discarde
2	1998	2	7.60508	1998022024	424498.55	5408579.22	DC	Discarde
2	1999	19	6.04297	1999061124	425695.78	5407600	DC	Discarde
2	2000	21	5.93411	2000120624	426189.22	5407600	DC	Discarde
3	1996	67	5.16528	1996050424	424430	5408573	DC	Discarde
3	1997	74	5.11248	1997022324	424480	5408573	DC	Discarde
3	1998	3	7.54957	1998022024	424430	5408573	DC	Discarde
3	1999	20	5.98752	1999061124	425628	5407693	DC	Discarde
3	2000	28	5.76067	2000121724	424498.55	5408579.22	DC	Highest
4	1996	94	4.98117	1996050424	424430	5408523	DC	Discarde
4	1997	81	5.05434	1997022324	424498.55	5408579.22	DC	Discarde
4	1998	4	7.29197	1998022024	424430	5408523	DC	Discarde
4	1999	32	5.6282	1999061124	425695.78	5407504	DC	Discarde
4	2000	29	5.73724	2000120624	426128	5407693	DC	
5	1997	83	5.04421	1997022324	424380	5408523	DC	Discarde
5	1998	5	7.16332	1998022024	424380	5408573	DC	Discarde
5	1999	41	5.34559	1999021724	424498.55	5408579.22	DC	
5	2000	30	5.67517	2000120624	426189.22	5407504	DC	
6	1998	6	7.14719	1998022024	424380	5408523	DC	Discarde
6	1999	45	5.3196	1999021724	424480	5408573	DC	
6	2000	31	5.66513	2000121724	424480	5408573	DC	
7	1998	7	7.11948	1998022024	424480	5408523	DC	Discarde
7	1999	46	5.31898	1999061124	425628	5407193	DC	
7	2000	35	5.51154	2000121724	424480	5408523	DC	
8	1998	8	6.96967	1998022024	424380	5408473	DC	Discarde
8	1999	48	5.30232	1999120324	424498.55	5408579.22	DC	
8	2000	42	5.33658	2000121724	424430	5408573	DC	
9	1998	9	6.8961	1998022024	424430	5408473	DC	Discarde
9	1999	59	5.22295	1999061124	425695.78	5407407.5	DC	
9	2000	43	5.32309	2000121724	424430	5408523	DC	
10	1998	10	6.66356	1998022024	424380	5408423	DC	Discarde
10	1999	60	5.21112	1999021724	424430	5408573	DC	
10	2000	52	5.27321	2000121724	424480	5408473	DC	
11	1998	11	6.54241	1998022024	424480	5408473	DC	Discarde
11	1999	61	5.20613	1999061124	425597.09	5407215.5	DC	
11	2000	54	5.25285	2000120624	426068.33	5407739.8	DC	
12	1998	12	6.52304	1998022024	424328	5408393	DC	Discarde
12	1999	64	5.18615	1999061124	425597.09	5407119	DC	
12	2000	57	5.22461	2000121724	424430	5408473	DC	
13	1998	13	6.40867	1998022024	424430	5408423	DC	Discarde

13	1999	65	5.18219	1999120324	424480	5408573	DC	
13	2000	62	5.20098	2000120624	426189.22	5407407.5	DC	
14	1998	14	6.34797	1998022024	424283.84	5408371.5	DC	Discarde
14	1999	66	5.16848	1999061124	425695.78	5407311.5	DC	
14	2000	68	5.16412	2000120624	426090.53	5407696	DC	
15	1998	15	6.34055	1998022024	424283.84	5408470.5	DC	Discarde
15	1999	69	5.14806	1999061124	425597.09	5407311.5	DC	
15	2000	82	5.05297	2000121724	424430	5408423	DC	
16	1998	17	6.2539	1998022024	424380	5408373	DC	Discarde
16	1999	70	5.14754	1999061124	425695.78	5407215.5	DC	
16	2000	89	4.99255	2000121724	424380	5408473	DC	
17	1998	22	5.92667	1998022024	424480	5408423	DC	Discarde
17	1999	71	5.14672	1999061124	425794.47	5407696	DC	
17	2000	90	4.98888	2000120624	426287.91	5407407.5	DC	
18	1998	23	5.8842	1998022024	424283.84	5408273	DC	Discarde
18	1999	73	5.11287	1999120324	424480	5408523	DC	
18	2000	92	4.98204	2000120624	426287.91	5407504	DC	
19	1998	24	5.85699	1998022024	424430	5408373	DC	Discarde
19	1999	75	5.10259	1999061124	425695.78	5407119	DC	
19	2000	96	4.97272	2000121724	424380	5408523	DC	
20	1998	25	5.82023	1998022024	424283.84	5408569	DC	Discarde
20	1999	76	5.08212	1999061124	425597.09	5407023	DC	
20	2000	98	4.97125	2000121724	424480	5408423	DC	
21	1998	26	5.77225	1998022024	424380	5408323	DC	Discarde
21	1999	79	5.06266	1999021724	424430	5408523	DC	
22	1998	27	5.76136	1998022024	424187.69	5408273	DC	Discarde
22	1999	84	5.03363	1999021724	424480	5408523	DC	
23	1998	33	5.61474	1998022024	424187.69	5408371.5	DC	Discarde
23	1999	85	5.02309	1999120324	424480	5408473	DC	
24	1998	34	5.5612	1998010424	424380	5408573	DC	
24	1999	87	5.00668	1999061124	425597.09	5407407.5	DC	
25	1998	36	5.49549	1998010424	424283.84	5408569	DC	
25	1999	88	5.00273	1999061124	425597.09	5407504	DC	
26	1998	37	5.47355	1998022024	424215.53	5408177	DC	
26	1999	95	4.9791	1999061124	425597.09	5407600	DC	
27	1998	38	5.43096	1998010424	424430	5408573	DC	
27	1999	100	4.96634	1999061124	425695.78	5407023	DC	
28	1998	39	5.41581	1998022024	424128	5408193	DC	
29	1998	40	5.35345	1998022024	424116.84	5408177	DC	
30	1998	44	5.32029	1998010424	424498.55	5408579.22	DC	
31	1998	47	5.30614	1998010424	424480	5408573	DC	
32	1998	49	5.30164	1998022024	424480	5408373	DC	
33	1998	50	5.29109	1998022024	424430	5408323	DC	
34	1998	53	5.26104	1998022024	424380	5408273	DC	
35	1998	63	5.19403	1998010424	424380	5408523	DC	
36	1998	72	5.13474	1998022024	424116.84	5408080.5	DC	
37	1998	77	5.06316	1998022024	424187.69	5408470.5	DC	
38	1998	78	5.06279	1998010424	424283.84	5408470.5	DC	
39	1998	80	5.05797	1998010424	424430	5408523	DC	

*** THE MAXIMUM 100 24-HR AVERAGE CONCENTRATION VALUES FOR SOURCE GROUP: CONST_HR ***

RANK BY	YEAR	RANK	CONC	YYYYMM	XR	YR	TYPE	Ontario Reg. 419/05
1	1996	21	4.59106	2E+09	420767	5413450	DC	Discarded
1	1997	9	4.82153	2E+09	420767	5413450	DC	Discarded
1	1998	1	5.43721	2E+09	420767	5413450	DC	Discarded
1	1999	3	5.03437	2E+09	420767	5413450	DC	Discarded
1	2000	54	4.31313	2E+09	420767	5413450	DC	Discarded
2	1996	35	4.46091	2E+09	420728	5413493	DC	Discarded
2	1997	14	4.69106	2E+09	420767	5413450	DC	Highest
2	1998	2	5.19745	2E+09	420728	5413493	DC	Discarded
2	1999	8	4.82381	2E+09	420728	5413493	DC	Discarded
2	2000	79	4.20141	2E+09	420728	5413493	DC	Discarded
3	1996	45	4.36527	2E+09	420728	5413543	DC	Discarded
3	1997	17	4.61616	2E+09	420628	5413493	DC	
3	1998	4	5.02985	2E+09	420678	5413493	DC	Discarded
3	1999	11	4.73103	2E+09	420678	5413493	DC	Discarded
3	2000	82	4.1829	2E+09	420767	5413450	DC	
4	1996	62	4.27208	2E+09	420678	5413493	DC	Discarded
4	1997	19	4.59801	2E+09	420678	5413493	DC	
4	1998	5	4.98576	2E+09	420728	5413543	DC	Discarded
4	1999	18	4.61528	2E+09	420728	5413543	DC	Discarded
4	2000	92	4.14692	2E+09	420678	5413493	DC	
5	1996	70	4.23607	2E+09	420728	5413593	DC	Discarded
5	1997	22	4.57758	2E+09	420578	5413493	DC	
5	1998	6	4.85903	2E+09	420628	5413493	DC	Discarded
5	1999	23	4.57464	2E+09	420628	5413493	DC	Discarded
5	2000	95	4.12626	2E+09	420767	5413450	DC	
6	1996	78	4.21544	2E+09	420678	5413543	DC	Discarded
6	1997	26	4.54718	2E+09	420528	5413493	DC	
6	1998	7	4.84789	2E+09	420678	5413543	DC	Discarded
6	1999	24	4.56826	2E+09	420678	5413543	DC	Discarded
7	1996	91	4.15731	2E+09	420730	5413623	DC	Discarded
7	1997	29	4.52647	2E+09	420728	5413493	DC	
7	1998	10	4.76143	2E+09	420728	5413593	DC	Discarded
7	1999	33	4.48607	2E+09	420628	5413543	DC	Discarded
8	1996	94	4.12928	2E+09	420678	5413593	DC	Discarded
8	1997	30	4.51535	2E+09	420728	5413493	DC	
8	1998	12	4.711	2E+09	420578	5413493	DC	Discarded
8	1999	41	4.39325	2E+09	420728	5413593	DC	Discarded
9	1997	31	4.51468	2E+09	420428	5413493	DC	
9	1998	13	4.70641	2E+09	420628	5413543	DC	Discarded
9	1999	43	4.37617	2E+09	420678	5413593	DC	Discarded
10	1997	32	4.51464	2E+09	420478	5413493	DC	
10	1998	15	4.6571	2E+09	420678	5413593	DC	Discarded
10	1999	47	4.35086	2E+09	420628	5413593	DC	Discarded
11	1997	34	4.46307	2E+09	420378	5413493	DC	
11	1998	16	4.63914	2E+09	420730	5413623	DC	Discarded
11	1999	51	4.32448	2E+09	420578	5413493	DC	Discarded

12	1997	37	4.44044	2E+09	420728	5413543	DC	
12	1998	20	4.59136	2E+09	420528	5413493	DC	Discarded
12	1999	56	4.3004	2E+09	420578	5413543	DC	Discarded
13	1997	44	4.37591	2E+09	420328	5413493	DC	
13	1998	25	4.55874	2E+09	420578	5413543	DC	Discarded
13	1999	60	4.27766	2E+09	420730	5413623	DC	Discarded
14	1997	46	4.35983	2E+09	420728	5413593	DC	
14	1998	27	4.54209	2E+09	420628	5413593	DC	Discarded
14	1999	69	4.23738	2E+09	420578	5413593	DC	Discarded
15	1997	49	4.33821	2E+09	420730	5413623	DC	
15	1998	28	4.5342	2E+09	420728	5413643	DC	Discarded
15	1999	80	4.20056	2E+09	420628	5413643	DC	Discarded
16	1997	53	4.31496	2E+09	420628	5413543	DC	
16	1998	36	4.46008	2E+09	420678	5413643	DC	Discarded
16	1999	83	4.17908	2E+09	420728	5413643	DC	Discarded
17	1997	58	4.28803	2E+09	420578	5413543	DC	
17	1998	38	4.4319	2E+09	420478	5413493	DC	Discarded
17	1999	85	4.17101	2E+09	420578	5413643	DC	Discarded
18	1997	59	4.28277	2E+09	420728	5413643	DC	
18	1998	39	4.42909	2E+09	420528	5413543	DC	Discarded
18	1999	86	4.16952	2E+09	420678	5413643	DC	Discarded
19	1997	63	4.26719	2E+09	420278	5413493	DC	
19	1998	40	4.41118	2E+09	420578	5413593	DC	Discarded
20	1997	64	4.25879	2E+09	420678	5413543	DC	
20	1998	42	4.3925	2E+09	420628	5413643	DC	Discarded
21	1997	67	4.25053	2E+09	420428	5413543	DC	
21	1998	48	4.33893	2E+09	420478	5413543	DC	Discarded
22	1997	72	4.23094	2E+09	420528	5413543	DC	
22	1998	50	4.32921	2E+09	420528	5413593	DC	Discarded
23	1997	73	4.22696	2E+09	420478	5413543	DC	
23	1998	52	4.3216	2E+09	420728	5413693	DC	Discarded
24	1997	74	4.22198	2E+09	420678	5413493	DC	
24	1998	55	4.3096	2E+09	420578	5413643	DC	Discarded
25	1997	76	4.21724	2E+09	420728	5413693	DC	
25	1998	57	4.29846	2E+09	420678	5413693	DC	Discarded
26	1997	77	4.21654	2E+09	420378	5413543	DC	
26	1998	61	4.27683	2E+09	420530	5413623	DC	Discarded
27	1997	87	4.16826	2E+09	420228	5413493	DC	
27	1998	65	4.25864	2E+09	420628	5413693	DC	Discarded
28	1997	89	4.1587	2E+09	420328	5413543	DC	
28	1998	66	4.25612	2E+09	420478	5413593	DC	Discarded
29	1997	90	4.15751	2E+09	420728	5413543	DC	
29	1998	68	4.24154	2E+09	420428	5413493	DC	Discarded
30	1997	93	4.13208	2E+09	420728	5413743	DC	
30	1998	71	4.23557	2E+09	420528	5413643	DC	Discarded
31	1997	98	4.11252	2E+09	420678	5413543	DC	
31	1998	75	4.22062	2E+09	420428	5413543	DC	Discarded
32	1998	81	4.19621	2E+09	420578	5413693	DC	Discarded
33	1998	84	4.17329	2E+09	420478	5413643	DC	Discarded

*** THE MAXIMUM 100 24-HR AVERAGE CONCENTRATION VALUES FOR SOURCE GROUP: DC6 ***

RANK BY	YEAR	RANK	CONC	YYYYMM	XR	YR	TYPE	Ontario Reg. 419/05
1	1996	14	1.66064	2E+09	428730	5414223	DC	Discarded
1	1998	6	1.76137	2E+09	425530	5414223	DC	Discarded
1	1999	11	1.69513	2E+09	428930	5412823	DC	Discarded
1	2000	1	1.90299	2E+09	427128	5414193	DC	Discarded
2	1996	45	1.55156	2E+09	425530	5414223	DC	
2	1998	7	1.7482	2E+09	424413	5407985	DC	
2	1999	17	1.65786	2E+09	428808	5412548	DC	Discarded
2	2000	2	1.89601	2E+09	427330	5414223	DC	Discarded
3	1996	54	1.53098	2E+09	428809	5413327	DC	
3	1998	10	1.69567	2E+09	424413	5407889	DC	
3	1999	38	1.56658	2E+09	428930	5413223	DC	
3	2000	3	1.87891	2E+09	427130	5414223	DC	Discarded
4	1996	58	1.5283	2E+09	428628	5414193	DC	
4	1998	15	1.65938	2E+09	424314	5407696	DC	
4	1999	39	1.55899	2E+09	429130	5412623	DC	
4	2000	4	1.80619	2E+09	427930	5414223	DC	Highest
5	1996	74	1.5025	2E+09	428817	5414150	DC	
5	1998	16	1.65835	2E+09	424413	5408081	DC	
5	1999	49	1.54081	2E+09	429128	5408693	DC	
5	2000	5	1.79144	2E+09	427330	5414423	DC	
6	1998	18	1.65505	2E+09	424314	5407792	DC	
6	1999	57	1.5285	2E+09	427530	5414223	DC	
6	2000	8	1.72562	2E+09	427128	5414393	DC	
7	1998	21	1.63403	2E+09	424216	5407696	DC	
7	1999	65	1.51627	2E+09	426683	5407696	DC	
7	2000	9	1.70404	2E+09	427130	5414423	DC	
8	1998	22	1.63226	2E+09	425330	5414423	DC	
8	1999	68	1.51124	2E+09	428930	5412623	DC	
8	2000	12	1.68193	2E+09	427330	5414623	DC	
9	1998	24	1.62129	2E+09	424314	5407889	DC	
9	1999	70	1.50751	2E+09	429130	5413023	DC	
9	2000	13	1.67146	2E+09	425696	5407696	DC	
10	1998	26	1.61468	2E+09	425328	5414393	DC	
10	1999	73	1.50361	2E+09	429130	5412823	DC	
10	2000	19	1.64108	2E+09	425628	5407693	DC	
11	1998	27	1.61294	2E+09	425328	5414593	DC	
11	1999	81	1.489	2E+09	426628	5407693	DC	
11	2000	20	1.63537	2E+09	428130	5414423	DC	
12	1998	29	1.60731	2E+09	424216	5407600	DC	
12	1999	82	1.48798	2E+09	426928	5414193	DC	
12	2000	23	1.62214	2E+09	427530	5414223	DC	
13	1998	30	1.59851	2E+09	425330	5414623	DC	
13	1999	86	1.48241	2E+09	427628	5414193	DC	
13	2000	25	1.61632	2E+09	427330	5414823	DC	
14	1998	34	1.58092	2E+09	424413	5407792	DC	
14	1999	92	1.47236	2E+09	426683	5407600	DC	

14	2000	28	1.61246	2E+09	428130	5414623	DC
15	1998	37	1.56818	2E+09	424216	5407792	DC
15	1999	94	1.47108	2E+09	429330	5413023	DC
15	2000	31	1.59622	2E+09	427628	5414193	DC
16	1998	40	1.55843	2E+09	426328	5414193	DC
16	1999	95	1.46942	2E+09	426930	5414223	DC
16	2000	32	1.59378	2E+09	425696	5407600	DC
17	1998	41	1.55695	2E+09	424461	5407786	DC
17	1999	96	1.46637	2E+09	429130	5408623	DC
17	2000	33	1.58828	2E+09	427530	5414423	DC
18	1998	46	1.54946	2E+09	426330	5414223	DC
18	1999	98	1.46575	2E+09	426683	5407119	DC
18	2000	35	1.57424	2E+09	425597	5407696	DC
19	1998	47	1.54708	2E+09	424018	5407408	DC
19	2000	36	1.56984	2E+09	425597	5407600	DC
20	1998	51	1.53589	2E+09	424413	5407696	DC
20	2000	42	1.55457	2E+09	428128	5414693	DC
21	1998	55	1.53078	2E+09	424128	5407693	DC
21	2000	43	1.55352	2E+09	427530	5414623	DC
22	1998	59	1.52715	2E+09	424314	5407600	DC
22	2000	44	1.55255	2E+09	427128	5414593	DC
23	1998	61	1.52248	2E+09	424314	5407985	DC
23	2000	48	1.5453	2E+09	427530	5414823	DC
24	1998	63	1.5184	2E+09	424117	5407600	DC
24	2000	50	1.54044	2E+09	427730	5414223	DC
25	1998	64	1.51638	2E+09	424018	5407504	DC
25	2000	52	1.53388	2E+09	427130	5414623	DC
26	1998	66	1.51289	2E+09	423919	5407408	DC
26	2000	53	1.53238	2E+09	425597	5407504	DC
27	1998	67	1.5125	2E+09	424117	5407504	DC
27	2000	56	1.529	2E+09	425794	5407696	DC
28	1998	72	1.50412	2E+09	423919	5407312	DC
28	2000	60	1.52612	2E+09	425893	5407696	DC
29	1998	76	1.49713	2E+09	424018	5407312	DC
29	2000	62	1.51909	2E+09	426528	5414193	DC
30	1998	77	1.49636	2E+09	424480	5408273	DC
30	2000	69	1.50932	2E+09	425794	5407600	DC
31	1998	78	1.49604	2E+09	424413	5408177	DC
31	2000	71	1.5064	2E+09	426530	5414223	DC
32	1998	80	1.49326	2E+09	425528	5414393	DC
32	2000	75	1.50191	2E+09	427530	5415023	DC
33	1998	83	1.48701	2E+09	426328	5414393	DC
33	2000	79	1.49582	2E+09	427330	5415023	DC
34	1998	88	1.47913	2E+09	423919	5407216	DC
34	2000	84	1.48473	2E+09	425597	5407408	DC
35	1998	90	1.47657	2E+09	426330	5414423	DC
35	2000	85	1.4835	2E+09	425498	5407600	DC
36	1998	99	1.4654	2E+09	424117	5407696	DC
36	2000	87	1.47981	2E+09	425498	5407504	DC

*** THE MAXIMUM 100 1-HR AVERAGE CONCENTRATION VALUES FOR SOURCE GROUP: EOUTCR ***

RANK BY '	YEAR	RANK	CONC	YYYYMM	XR	YR	TYPE	Ontario Reg. 419/05
1	1996	1	37.7945	2E+09	429102	5408830	DC	Discarded
1	1997	4	36.5303	2E+09	426976	5407714	DC	Discarded
1	1998	12	35.5879	2E+09	426880	5407696	DC	Discarded
1	1999	3	36.842	2E+09	426917	5407750	DC	Discarded
1	2000	6	35.884	2E+09	429102	5408830	DC	Discarded
2	1996	2	37.3336	2E+09	429130	5408823	DC	Discarded
2	1997	8	35.7905	2E+09	427072	5407714	DC	Discarded
2	1998	17	35.3055	2E+09	426189	5407696	DC	Discarded
2	1999	5	35.9921	2E+09	426976	5407714	DC	Discarded
2	2000	7	35.8811	2E+09	426628	5407693	DC	Discarded
3	1996	45	34.0597	2E+09	426917	5407750	DC	Discarded
3	1997	9	35.7896	2E+09	426976	5407714	DC	Discarded
3	1998	18	35.2394	2E+09	429102	5408830	DC	Discarded
3	1999	11	35.6353	2E+09	427265	5407714	DC	Discarded
3	2000	10	35.6981	2E+09	427361	5407714	DC	Discarded
4	1996	62	33.5429	2E+09	429102	5408830	DC	Discarded
4	1997	15	35.4245	2E+09	426189	5407696	DC	Discarded
4	1998	19	35.2236	2E+09	426485	5407696	DC	Discarded
4	1999	31	34.4979	2E+09	426976	5407615	DC	Discarded
4	2000	13	35.5422	2E+09	429130	5408823	DC	Discarded
5	1996	70	33.3061	2E+09	429130	5408823	DC	Discarded
5	1997	16	35.3179	2E+09	427265	5407714	DC	Discarded
5	1998	22	35.0446	2E+09	427265	5407714	DC	Discarded
5	1999	43	34.0742	2E+09	427265	5407615	DC	Discarded
5	2000	14	35.5297	2E+09	426584	5407696	DC	Discarded
6	1997	20	35.1951	2E+09	426917	5407750	DC	Discarded
6	1998	26	34.9376	2E+09	426485	5407696	DC	Discarded
6	1999	47	34.0426	2E+09	426880	5407696	DC	Discarded
6	2000	23	35.0445	2E+09	426584	5407696	DC	Discarded
7	1997	21	35.1352	2E+09	427361	5407714	DC	Discarded
7	1998	27	34.9143	2E+09	429130	5408823	DC	Discarded
7	1999	54	33.7843	2E+09	427700	5407741	DC	Discarded
7	2000	24	35.0005	2E+09	427457	5407714	DC	Discarded
8	1997	25	34.9569	2E+09	426976	5407615	DC	Discarded
8	1998	33	34.3343	2E+09	426917	5407750	DC	Discarded
8	1999	59	33.6207	2E+09	427649	5407714	DC	Discarded
8	2000	41	34.1175	2E+09	426584	5407600	DC	Discarded
9	1997	28	34.7409	2E+09	426485	5407696	DC	Discarded
9	1998	38	34.2099	2E+09	426189	5407600	DC	Discarded
9	1999	67	33.3263	2E+09	426128	5407693	DC	Discarded
9	2000	42	34.0933	2E+09	426683	5407696	DC	Discarded
10	1997	29	34.6985	2E+09	427553	5407714	DC	Discarded
10	1998	46	34.0532	2E+09	426880	5407600	DC	Discarded
10	1999	76	33.195	2E+09	429102	5408830	DC	Discarded
10	2000	50	33.8509	2E+09	427457	5407615	DC	Discarded
11	1997	30	34.54	2E+09	426917	5407750	DC	Discarded

11	1998	58	33.6357	2E+09	426128	5407693	DC	Discarded
11	1999	79	33.0854	2E+09	426976	5407517	DC	Discarded
11	2000	51	33.8444	2E+09	427361	5407615	DC	Discarded
12	1997	32	34.3544	2E+09	427649	5407714	DC	Highest
12	1998	60	33.5981	2E+09	426781	5407696	DC	Discarded
12	1999	83	33.0227	2E+09	427720	5407741	DC	Discarded
12	2000	65	33.4398	2E+09	426584	5407600	DC	Discarded
13	1997	34	34.295	2E+09	426189	5407600	DC	
13	1998	74	33.2444	2E+09	426387	5407600	DC	Discarded
13	1999	88	32.9485	2E+09	426189	5407696	DC	Discarded
13	2000	71	33.2917	2E+09	426628	5407693	DC	Discarded
14	1997	35	34.2498	2E+09	429130	5408623	DC	
14	1998	75	33.2374	2E+09	427361	5407714	DC	Discarded
14	1999	90	32.9201	2E+09	429130	5408823	DC	Discarded
14	2000	72	33.2483	2E+09	427361	5407714	DC	Discarded
15	1997	36	34.2293	2E+09	426976	5407615	DC	
15	1998	81	33.0315	2E+09	426485	5407600	DC	Discarded
15	2000	77	33.1205	2E+09	429102	5408830	DC	Discarded
16	1997	37	34.212	2E+09	427072	5407615	DC	
16	1998	82	33.0315	2E+09	426387	5407696	DC	Discarded
16	2000	78	33.1024	2E+09	426485	5407696	DC	Discarded
17	1997	39	34.1966	2E+09	429093	5408498	DC	
17	1998	85	33.0086	2E+09	426387	5407600	DC	Discarded
17	2000	84	33.0113	2E+09	426485	5407600	DC	Discarded
18	1997	40	34.1651	2E+09	429102	5408830	DC	
18	1998	89	32.9343	2E+09	427361	5407615	DC	Discarded
18	2000	86	32.9652	2E+09	426584	5407504	DC	Discarded
19	1997	44	34.072	2E+09	427720	5407741	DC	
19	1998	93	32.8332	2E+09	426387	5407504	DC	Discarded
19	2000	96	32.7751	2E+09	427361	5407714	DC	Discarded
20	1997	48	34.0191	2E+09	426485	5407600	DC	
20	1998	95	32.7993	2E+09	426485	5407600	DC	Discarded
20	2000	99	32.7232	2E+09	426683	5407696	DC	Discarded
21	1997	49	33.9295	2E+09	427628	5407693	DC	
21	1998	98	32.7521	2E+09	427265	5407615	DC	Discarded
22	1997	52	33.8122	2E+09	426584	5407696	DC	
22	1998	100	32.6972	2E+09	426387	5407696	DC	Discarded
23	1997	53	33.7981	2E+09	426128	5407693	DC	
24	1997	55	33.7231	2E+09	427128	5407693	DC	
25	1997	56	33.7169	2E+09	429130	5408823	DC	
26	1997	57	33.6784	2E+09	426976	5407714	DC	
27	1997	61	33.5925	2E+09	427700	5407741	DC	
28	1997	63	33.4718	2E+09	426976	5407517	DC	
29	1997	64	33.4478	2E+09	427361	5407714	DC	
30	1997	66	33.3299	2E+09	427361	5407615	DC	
31	1997	68	33.322	2E+09	427553	5407615	DC	
32	1997	69	33.3061	2E+09	425992	5407696	DC	
33	1997	73	33.2461	2E+09	427361	5407615	DC	
34	1997	80	33.0337	2E+09	427265	5407615	DC	

*** THE MAXIMUM 100 24-HR AVERAGE CONCENTRATION VALUES FOR SOURCE GROUP: EOUTCR ***

RANK BY	YEAR	RANK	CONC	YYYYMM	XR	YR	TYPE	Ontario Reg. 419/05
1	1996	22	4.70419	2E+09	426387	5407696	DC	Discarded
1	1998	18	4.79657	2E+09	427457	5407714	DC	Discarded
1	1999	1	5.66981	2E+09	426976	5407714	DC	Discarded
1	2000	2	5.584	2E+09	426387	5407696	DC	Discarded
2	1996	25	4.65646	2E+09	426288	5407696	DC	Discarded
2	1998	31	4.59846	2E+09	424480	5408273	DC	
2	1999	3	5.52896	2E+09	426917	5407750	DC	Discarded
2	2000	4	5.41964	2E+09	426485	5407696	DC	Discarded
3	1996	28	4.62081	2E+09	426485	5407696	DC	Discarded
3	1998	34	4.56563	2E+09	424480	5408323	DC	
3	1999	5	5.34251	2E+09	426976	5407615	DC	Discarded
3	2000	6	5.28276	2E+09	426387	5407600	DC	Discarded
4	1996	43	4.49614	2E+09	426189	5407696	DC	Discarded
4	1998	35	4.55568	2E+09	427361	5407714	DC	
4	1999	7	5.28019	2E+09	427072	5407714	DC	Discarded
4	2000	8	5.2466	2E+09	426288	5407696	DC	Discarded
5	1996	46	4.46619	2E+09	426288	5407600	DC	Discarded
5	1998	38	4.54005	2E+09	427553	5407714	DC	
5	1999	10	5.04816	2E+09	426976	5407517	DC	Discarded
5	2000	9	5.161	2E+09	426288	5407600	DC	Discarded
6	1996	50	4.43014	2E+09	426387	5407600	DC	Discarded
6	1998	44	4.4825	2E+09	424430	5408273	DC	
6	1999	12	5.03155	2E+09	427072	5407615	DC	Discarded
6	2000	11	5.0317	2E+09	426485	5407600	DC	Discarded
7	1996	60	4.33474	2E+09	426189	5407600	DC	Discarded
7	1998	45	4.47339	2E+09	427457	5407615	DC	
7	1999	13	4.99671	2E+09	426880	5407696	DC	Discarded
7	2000	14	4.96349	2E+09	426387	5407504	DC	Discarded
8	1996	62	4.32776	2E+09	426485	5407600	DC	Discarded
8	1998	48	4.44241	2E+09	424480	5408373	DC	
8	1999	17	4.79728	2E+09	427072	5407517	DC	Discarded
8	2000	15	4.9243	2E+09	426584	5407696	DC	Discarded
9	1996	65	4.30763	2E+09	426584	5407696	DC	Discarded
9	1998	51	4.42987	2E+09	425696	5407696	DC	
9	1999	19	4.79439	2E+09	426976	5407418	DC	Discarded
9	2000	16	4.89839	2E+09	426288	5407504	DC	Discarded
10	1996	72	4.24753	2E+09	426128	5407693	DC	Discarded
10	1998	54	4.40553	2E+09	424430	5408323	DC	
10	1999	20	4.73405	2E+09	426880	5407600	DC	Discarded
10	2000	21	4.72917	2E+09	426189	5407696	DC	Highest
11	1996	80	4.18978	2E+09	429102	5408830	DC	
11	1998	55	4.39337	2E+09	425628	5407693	DC	
11	1999	24	4.65694	2E+09	427128	5407693	DC	Discarded
11	2000	23	4.69681	2E+09	426288	5407696	DC	
12	1996	85	4.16779	2E+09	426387	5407504	DC	
12	1998	56	4.38484	2E+09	424413	5408177	DC	

12	1999	32	4.58171	2E+09	427072	5407418	DC	Discarded
12	2000	26	4.64681	2E+09	426628	5407693	DC	
13	1996	87	4.15853	2E+09	426288	5407504	DC	
13	1998	58	4.35011	2E+09	427553	5407615	DC	
13	1999	33	4.57853	2E+09	426976	5407319	DC	Discarded
13	2000	27	4.62634	2E+09	426485	5407504	DC	
14	1996	92	4.14324	2E+09	429130	5408823	DC	
14	1998	59	4.34945	2E+09	424380	5408273	DC	
14	1999	42	4.4987	2E+09	426880	5407504	DC	Discarded
14	2000	29	4.61455	2E+09	426189	5407696	DC	
15	1998	64	4.31826	2E+09	425597	5407696	DC	
15	1999	47	4.45045	2E+09	427072	5407319	DC	Discarded
15	2000	30	4.60512	2E+09	426189	5407600	DC	
16	1998	70	4.27521	2E+09	424328	5408193	DC	
16	1999	49	4.43403	2E+09	426976	5407221	DC	Discarded
16	2000	36	4.54792	2E+09	426387	5407408	DC	
17	1998	73	4.24487	2E+09	424430	5408373	DC	
17	1999	61	4.3316	2E+09	426976	5407122	DC	Discarded
17	2000	37	4.54031	2E+09	426189	5407600	DC	
18	1998	74	4.24241	2E+09	424314	5408177	DC	
18	1999	66	4.29429	2E+09	427072	5407221	DC	Discarded
18	2000	39	4.53937	2E+09	426288	5407408	DC	
19	1998	75	4.23451	2E+09	424480	5408423	DC	
19	1999	67	4.28946	2E+09	426880	5407408	DC	Discarded
19	2000	40	4.5325	2E+09	426128	5407693	DC	
20	1998	76	4.23433	2E+09	424380	5408323	DC	
20	1999	79	4.19009	2E+09	427700	5407741	DC	
20	2000	41	4.51747	2E+09	426584	5407600	DC	
21	1998	90	4.14732	2E+09	427457	5407517	DC	
21	1999	81	4.18158	2E+09	426976	5407023	DC	
21	2000	52	4.42757	2E+09	426288	5407600	DC	
22	1998	91	4.14535	2E+09	427553	5407517	DC	
22	1999	83	4.17575	2E+09	427168	5407714	DC	
22	2000	53	4.42243	2E+09	426189	5407504	DC	
23	1998	93	4.1356	2E+09	425794	5407696	DC	
23	1999	86	4.16146	2E+09	427720	5407741	DC	
23	2000	57	4.36532	2E+09	426387	5407696	DC	
24	1998	94	4.13352	2E+09	427361	5407615	DC	
24	1999	88	4.15371	2E+09	427072	5407122	DC	
24	2000	63	4.32618	2E+09	426683	5407696	DC	
25	1998	97	4.12222	2E+09	427628	5407693	DC	
25	1999	96	4.12576	2E+09	426880	5407312	DC	
25	2000	68	4.27625	2E+09	426288	5407312	DC	
26	1999	100	4.10542	2E+09	427649	5407714	DC	
26	2000	69	4.276	2E+09	426091	5407696	DC	
27	2000	71	4.26749	2E+09	427361	5407714	DC	
28	2000	77	4.234	2E+09	426189	5407408	DC	
29	2000	78	4.2149	2E+09	426485	5407408	DC	
30	2000	82	4.17641	2E+09	426387	5407312	DC	

*** THE MAXIMUM 100 24-HR AVERAGE CONCENTRATION VALUES FOR SOURCE GROUP: EF5 ***

RANK BY	YEAR	RANK	CONC	YYYYMM	XR	YR	TYPE	Ontario Reg. 419/05
1	1996	9	1.78896	2E+09	428730	5414223	DC	Discarded
1	1998	6	1.80842	2E+09	424413	5407985	DC	Discarded
1	1999	8	1.798	2E+09	428930	5412823	DC	Discarded
1	2000	1	2.00968	2E+09	427330	5414223	DC	Discarded
2	1996	30	1.66913	2E+09	428809	5413327	DC	
2	1998	7	1.79906	2E+09	425530	5414223	DC	
2	1999	10	1.7698	2E+09	428808	5412548	DC	Discarded
2	2000	2	1.9467	2E+09	427128	5414193	DC	Discarded
3	1996	32	1.66478	2E+09	428817	5414150	DC	
3	1998	12	1.76039	2E+09	424413	5407889	DC	
3	1999	21	1.70532	2E+09	429130	5412623	DC	
3	2000	3	1.92123	2E+09	427130	5414223	DC	Discarded
4	1996	35	1.64997	2E+09	428628	5414193	DC	
4	1998	17	1.71945	2E+09	424314	5407696	DC	
4	1999	29	1.67115	2E+09	428930	5413223	DC	
4	2000	4	1.89069	2E+09	427330	5414423	DC	Discarded
5	1996	63	1.58507	2E+09	425530	5414223	DC	
5	1998	19	1.71443	2E+09	424314	5407792	DC	
5	1999	36	1.63324	2E+09	426683	5407696	DC	
5	2000	5	1.87369	2E+09	427930	5414223	DC	Highest
6	1998	20	1.70833	2E+09	424413	5408081	DC	
6	1999	43	1.61716	2E+09	428930	5412623	DC	
6	2000	11	1.76755	2E+09	427330	5414623	DC	
7	1998	25	1.68931	2E+09	424216	5407696	DC	
7	1999	48	1.60513	2E+09	426781	5407696	DC	
7	2000	13	1.75723	2E+09	427128	5414393	DC	
8	1998	27	1.67681	2E+09	424314	5407889	DC	
8	1999	54	1.59592	2E+09	426683	5407119	DC	
8	2000	14	1.74661	2E+09	427530	5414223	DC	
9	1998	33	1.66391	2E+09	424216	5407600	DC	
9	1999	57	1.59393	2E+09	429128	5408693	DC	
9	2000	15	1.74437	2E+09	425696	5407696	DC	
10	1998	38	1.63205	2E+09	424413	5407792	DC	
10	1999	58	1.59357	2E+09	429130	5413023	DC	
10	2000	16	1.73494	2E+09	427130	5414423	DC	
11	1998	42	1.61738	2E+09	424216	5407792	DC	
11	1999	60	1.5918	2E+09	426683	5407600	DC	
11	2000	18	1.71918	2E+09	428130	5414423	DC	
12	1998	45	1.61199	2E+09	424461	5407786	DC	
12	1999	61	1.59065	2E+09	429130	5412823	DC	
12	2000	22	1.70526	2E+09	425628	5407693	DC	
13	1998	46	1.60615	2E+09	425328	5414593	DC	
13	1999	64	1.58458	2E+09	429128	5412693	DC	
13	2000	23	1.70166	2E+09	427530	5414423	DC	
14	1998	47	1.60552	2E+09	426328	5414193	DC	
14	1999	65	1.58258	2E+09	426683	5407023	DC	

14	2000	24	1.69443	2E+09	427628	5414193	DC
15	1998	51	1.59877	2E+09	425330	5414623	DC
15	1999	66	1.58108	2E+09	426683	5407216	DC
15	2000	26	1.67767	2E+09	427330	5414823	DC
16	1998	53	1.59619	2E+09	426330	5414223	DC
16	1999	74	1.57494	2E+09	428930	5413023	DC
16	2000	28	1.67582	2E+09	428130	5414623	DC
17	1998	55	1.5957	2E+09	424018	5407408	DC
17	1999	76	1.57386	2E+09	426628	5407693	DC
17	2000	31	1.66506	2E+09	425696	5407600	DC
18	1998	56	1.59502	2E+09	424413	5407696	DC
18	1999	79	1.5705	2E+09	426781	5407600	DC
18	2000	34	1.65641	2E+09	427530	5414623	DC
19	1998	59	1.59318	2E+09	425330	5414423	DC
19	1999	83	1.56708	2E+09	426781	5407119	DC
19	2000	37	1.6327	2E+09	425597	5407696	DC
20	1998	70	1.57633	2E+09	425528	5414393	DC
20	1999	84	1.56434	2E+09	426683	5407312	DC
20	2000	39	1.63167	2E+09	427530	5414823	DC
21	1998	71	1.57628	2E+09	424128	5407693	DC
21	1999	85	1.5643	2E+09	426928	5414193	DC
21	2000	40	1.63103	2E+09	425597	5407600	DC
22	1998	75	1.57462	2E+09	424314	5407600	DC
22	1999	87	1.56325	2E+09	426781	5407023	DC
22	2000	41	1.62315	2E+09	427730	5414223	DC
23	1998	80	1.56969	2E+09	424117	5407600	DC
23	1999	89	1.55974	2E+09	427530	5414223	DC
23	2000	44	1.61454	2E+09	428128	5414693	DC
24	1998	81	1.56967	2E+09	425328	5414393	DC
24	1999	90	1.55963	2E+09	426683	5407504	DC
24	2000	49	1.59961	2E+09	425794	5407696	DC
25	1998	82	1.56718	2E+09	424314	5407985	DC
25	1999	91	1.55947	2E+09	427628	5414193	DC
25	2000	50	1.59893	2E+09	425893	5407696	DC
26	1998	86	1.56421	2E+09	424117	5407504	DC
26	1999	100	1.54811	2E+09	426683	5407408	DC
26	2000	52	1.5964	2E+09	425597	5407504	DC
27	1998	88	1.56311	2E+09	424018	5407504	DC
27	2000	62	1.58765	2E+09	426528	5414193	DC
28	1998	92	1.5585	2E+09	424117	5407696	DC
28	2000	67	1.5782	2E+09	427530	5415023	DC
29	1998	94	1.55401	2E+09	423919	5407408	DC
29	2000	68	1.57697	2E+09	427930	5414423	DC
30	1998	98	1.54975	2E+09	423919	5407312	DC
30	2000	69	1.57689	2E+09	427128	5414593	DC
31	2000	72	1.5756	2E+09	425794	5407600	DC
32	2000	73	1.57531	2E+09	426530	5414223	DC
33	2000	77	1.57088	2E+09	428808	5412548	DC
34	2000	78	1.57052	2E+09	426928	5414193	DC

*** THE MAXIMUM 100 1-HR AVERAGE CONCENTRATION VALUES FOR SOURCE GROUP: EMRSS ***

RANK BY	YEAR	RANK	CONC	YYYYMM	XR	YR	TYPE	Ontario Reg. 419/05
1	1997	8	31.1501	2E+09	424430	5408573	DC	Discarded
1	1998	1	31.6455	2E+09	424380	5408573	DC	Discarded
1	2000	17	30.9877	2E+09	424499	5408579	DC	Discarded
2	1997	9	31.145	2E+09	423899	5408273	DC	Discarded
2	1998	2	31.4913	2E+09	423899	5408273	DC	Discarded
2	2000	19	30.9269	2E+09	424480	5408573	DC	Discarded
3	1997	11	31.0596	2E+09	424480	5408573	DC	Discarded
3	1998	3	31.4331	2E+09	424380	5408523	DC	Discarded
3	2000	27	30.7671	2E+09	424480	5408523	DC	Discarded
4	1997	12	31.0415	2E+09	424430	5408523	DC	Discarded
4	1998	4	31.25	2E+09	424380	5408573	DC	Discarded
4	2000	51	30.5357	2E+09	424480	5408473	DC	Discarded
5	1997	21	30.8828	2E+09	424499	5408579	DC	Discarded
5	1998	5	31.2096	2E+09	424328	5408393	DC	Discarded
5	2000	57	30.4445	2E+09	424480	5408423	DC	Discarded
6	1997	22	30.8515	2E+09	423515	5408569	DC	Discarded
6	1998	6	31.1792	2E+09	424284	5408372	DC	Discarded
6	2000	65	30.3839	2E+09	424430	5408423	DC	Discarded
7	1997	23	30.8286	2E+09	424430	5408473	DC	Discarded
7	1998	7	31.1604	2E+09	424284	5408273	DC	Discarded
7	2000	68	30.3525	2E+09	424430	5408523	DC	Discarded
8	1997	24	30.8192	2E+09	424430	5408423	DC	Discarded
8	1998	10	31.0796	2E+09	424380	5408473	DC	Discarded
8	2000	69	30.3373	2E+09	424430	5408573	DC	Discarded
9	1997	26	30.7685	2E+09	424480	5408523	DC	Discarded
9	1998	13	31.0396	2E+09	423928	5408193	DC	Discarded
9	2000	75	30.2689	2E+09	424430	5408473	DC	Discarded
10	1997	31	30.7228	2E+09	424380	5408373	DC	Discarded
10	1998	14	31.0253	2E+09	424380	5408523	DC	Discarded
10	2000	80	30.2004	2E+09	424499	5408579	DC	Discarded
11	1997	35	30.6922	2E+09	423928	5408193	DC	Discarded
11	1998	15	31.011	2E+09	423919	5408177	DC	Discarded
11	2000	90	30.1059	2E+09	424430	5408273	DC	Discarded
12	1997	36	30.6905	2E+09	423707	5408569	DC	Discarded
12	1998	16	30.9992	2E+09	424430	5408573	DC	Discarded
12	2000	91	30.1024	2E+09	424430	5408323	DC	Discarded
13	1997	37	30.6852	2E+09	423707	5408471	DC	Discarded
13	1998	18	30.9412	2E+09	424380	5408423	DC	Discarded
13	2000	92	30.079	2E+09	424430	5408373	DC	Discarded
14	1997	40	30.659	2E+09	423919	5408177	DC	Discarded
14	1998	20	30.9074	2E+09	423995	5408372	DC	Discarded
14	2000	95	30.0501	2E+09	424413	5408177	DC	Discarded
15	1997	43	30.6218	2E+09	423995	5408372	DC	Discarded
15	1998	25	30.783	2E+09	423995	5408471	DC	Discarded
15	2000	97	30.0216	2E+09	424480	5408373	DC	Discarded
16	1997	45	30.6025	2E+09	424380	5408423	DC	Discarded

16	1998	28	30.757	2E+09	424328	5408393	DC	Discarded
17	1997	48	30.5783	2E+09	424380	5408273	DC	Discarded
17	1998	29	30.7561	2E+09	424380	5408373	DC	Discarded
18	1997	50	30.5477	2E+09	423707	5408372	DC	Discarded
18	1998	30	30.7398	2E+09	424284	5408471	DC	Discarded
19	1997	53	30.5249	2E+09	423995	5408471	DC	Discarded
19	1998	32	30.7209	2E+09	423928	5408393	DC	Discarded
20	1997	55	30.4877	2E+09	424380	5408523	DC	Discarded
20	1998	33	30.7135	2E+09	424284	5408372	DC	Discarded
21	1997	56	30.4833	2E+09	424380	5408323	DC	Discarded
21	1998	34	30.697	2E+09	424314	5408177	DC	Discarded
22	1997	58	30.4401	2E+09	424380	5408473	DC	Discarded
22	1998	38	30.6644	2E+09	424328	5408193	DC	Discarded
23	1997	59	30.4323	2E+09	423928	5408393	DC	Discarded
23	1998	39	30.6633	2E+09	424380	5408473	DC	Discarded
24	1997	61	30.4049	2E+09	424380	5408573	DC	Discarded
24	1998	41	30.6578	2E+09	424284	5408273	DC	Discarded
25	1997	63	30.4038	2E+09	424480	5408473	DC	Discarded
25	1998	42	30.6378	2E+09	423899	5408372	DC	Discarded
26	1997	66	30.3776	2E+09	424430	5408373	DC	Discarded
26	1998	44	30.6208	2E+09	424430	5408573	DC	Discarded
27	1997	67	30.3554	2E+09	424092	5408569	DC	Discarded
27	1998	46	30.5832	2E+09	424092	5408569	DC	Discarded
28	1997	70	30.3347	2E+09	423899	5408372	DC	Discarded
28	1998	47	30.5832	2E+09	424430	5408523	DC	Discarded
29	1997	73	30.2998	2E+09	423728	5408393	DC	Discarded
29	1998	49	30.5675	2E+09	423995	5408273	DC	Discarded
30	1997	74	30.2714	2E+09	424430	5408323	DC	Discarded
30	1998	52	30.5342	2E+09	424216	5408177	DC	Discarded
31	1997	76	30.2596	2E+09	423995	5408273	DC	Discarded
31	1998	54	30.5104	2E+09	424380	5408423	DC	Discarded
32	1997	77	30.2339	2E+09	424328	5408193	DC	Discarded
32	1998	60	30.4238	2E+09	424284	5408569	DC	Discarded
33	1997	78	30.2231	2E+09	423611	5408372	DC	Discarded
33	1998	62	30.4041	2E+09	424216	5408081	DC	Discarded
34	1997	79	30.216	2E+09	423611	5408569	DC	Discarded
34	1998	64	30.3841	2E+09	424216	5407985	DC	Discarded
35	1997	83	30.18	2E+09	424480	5408423	DC	Discarded
35	1998	71	30.3224	2E+09	424284	5408471	DC	Discarded
36	1997	86	30.1439	2E+09	424430	5408273	DC	Discarded
36	1998	72	30.3118	2E+09	424380	5408373	DC	Discarded
37	1997	88	30.1391	2E+09	423803	5408569	DC	Discarded
37	1998	81	30.1997	2E+09	424380	5408323	DC	Discarded
38	1997	93	30.0782	2E+09	424413	5408177	DC	Discarded
38	1998	82	30.1988	2E+09	424430	5408523	DC	Discarded
39	1997	98	30.0207	2E+09	424314	5408081	DC	Discarded
39	1998	84	30.1712	2E+09	424314	5408177	DC	Discarded
40	1997	99	30.0158	2E+09	423515	5408471	DC	Discarded
40	1998	85	30.1463	2E+09	424328	5408193	DC	Discarded

*** THE MAXIMUM 100 24-HR AVERAGE CONCENTRATION VALUES FOR SOURCE GROUP: EMRSS ***

RANK BY	YEAR	RANK	CONC	YYYYMM	XR	YR	TYPE	Ontario Reg. 419/05
1	1996	22	3.91139	2E+09	424284	5408569	DC	Discarded
1	1998	44	3.70527	2E+09	423328	5408593	DC	Discarded
1	1999	78	3.51923	2E+09	425276	5407752	DC	Discarded
1	2000	1	4.42876	2E+09	424380	5408573	DC	Discarded
2	1996	24	3.89543	2E+09	424380	5408573	DC	Discarded
2	1998	48	3.68777	2E+09	423322	5408569	DC	Discarded
2	2000	2	4.38391	2E+09	424430	5408573	DC	Discarded
3	1996	29	3.81777	2E+09	424430	5408573	DC	Discarded
3	1998	51	3.68074	2E+09	423418	5408569	DC	Discarded
3	2000	3	4.37123	2E+09	424284	5408569	DC	Discarded
4	1996	35	3.79	2E+09	424380	5408523	DC	Discarded
4	1998	68	3.56304	2E+09	423226	5408569	DC	Discarded
4	2000	4	4.31713	2E+09	424380	5408523	DC	Discarded
5	1996	36	3.78022	2E+09	424188	5408569	DC	Discarded
5	1998	71	3.53441	2E+09	423322	5408471	DC	Discarded
5	2000	5	4.29508	2E+09	424480	5408573	DC	Discarded
6	1996	38	3.73515	2E+09	424284	5408471	DC	Discarded
6	1998	72	3.5324	2E+09	423515	5408569	DC	Discarded
6	2000	6	4.27036	2E+09	424499	5408579	DC	Discarded
7	1996	43	3.7073	2E+09	424430	5408523	DC	Discarded
7	1998	76	3.52194	2E+09	423226	5408471	DC	Discarded
7	2000	7	4.2614	2E+09	424430	5408523	DC	Discarded
8	1996	46	3.69861	2E+09	424480	5408573	DC	Discarded
8	1998	92	3.41672	2E+09	423418	5408471	DC	Discarded
8	2000	8	4.20282	2E+09	424284	5408471	DC	Discarded
9	1996	50	3.68103	2E+09	424380	5408473	DC	Discarded
9	1998	99	3.40497	2E+09	423226	5408372	DC	Discarded
9	2000	9	4.19956	2E+09	424380	5408473	DC	Discarded
10	1996	54	3.66754	2E+09	424188	5408471	DC	Discarded
10	2000	10	4.16503	2E+09	424480	5408523	DC	Discarded
11	1996	56	3.66066	2E+09	424499	5408579	DC	Discarded
11	2000	11	4.13957	2E+09	424188	5408569	DC	Discarded
12	1996	59	3.59599	2E+09	424430	5408473	DC	Discarded
12	2000	12	4.13627	2E+09	424430	5408473	DC	Discarded
13	1996	60	3.59177	2E+09	424380	5408423	DC	Discarded
13	2000	13	4.10083	2E+09	424380	5408423	DC	Discarded
14	1996	62	3.58655	2E+09	424328	5408393	DC	Discarded
14	2000	14	4.07224	2E+09	424328	5408393	DC	Discarded
15	1996	63	3.58583	2E+09	424480	5408523	DC	Discarded
15	2000	15	4.05776	2E+09	424188	5408471	DC	Discarded
16	1996	64	3.58076	2E+09	424284	5408372	DC	Discarded
16	2000	16	4.04879	2E+09	424284	5408372	DC	Discarded
17	1996	65	3.58059	2E+09	424092	5408569	DC	Discarded
17	2000	17	4.03541	2E+09	424480	5408473	DC	Discarded
18	1996	74	3.52812	2E+09	424188	5408372	DC	Discarded
18	2000	18	4.02988	2E+09	424430	5408423	DC	Discarded

19	1996	77	3.51988	2E+09	424092	5408471	DC	Discarded
19	2000	19	4.00197	2E+09	424380	5408373	DC	Discarded
20	1996	81	3.50417	2E+09	424380	5408373	DC	Discarded
20	2000	20	3.93949	2E+09	424188	5408372	DC	Discarded
21	1996	82	3.50413	2E+09	424430	5408423	DC	Discarded
21	2000	21	3.92086	2E+09	424480	5408423	DC	Discarded
22	1996	84	3.48908	2E+09	424128	5408393	DC	Discarded
22	2000	23	3.89996	2E+09	424430	5408373	DC	Discarded
23	1996	86	3.47465	2E+09	424480	5408473	DC	Discarded
23	2000	25	3.8845	2E+09	424380	5408323	DC	Discarded
24	1996	93	3.41622	2E+09	424284	5408273	DC	Discarded
24	2000	26	3.87533	2E+09	424284	5408273	DC	Discarded
25	1996	95	3.41527	2E+09	424092	5408372	DC	Discarded
25	2000	27	3.8383	2E+09	424128	5408393	DC	Discarded
26	2000	28	3.82206	2E+09	424188	5408273	DC	Discarded
27	2000	30	3.80105	2E+09	424092	5408569	DC	Discarded
28	2000	31	3.79602	2E+09	424430	5408323	DC	Discarded
29	2000	32	3.79106	2E+09	424092	5408471	DC	Discarded
30	2000	33	3.79092	2E+09	424380	5408273	DC	Discarded
31	2000	34	3.79026	2E+09	424480	5408373	DC	Discarded
32	2000	37	3.7477	2E+09	424188	5408569	DC	Highest
33	2000	39	3.7284	2E+09	424092	5408372	DC	
34	2000	40	3.71645	2E+09	424216	5408177	DC	
35	2000	41	3.71585	2E+09	424092	5408569	DC	
36	2000	42	3.70876	2E+09	424284	5408569	DC	
37	2000	45	3.70435	2E+09	424328	5408193	DC	
38	2000	47	3.6946	2E+09	424430	5408273	DC	
39	2000	49	3.68388	2E+09	424314	5408177	DC	
40	2000	52	3.67738	2E+09	424480	5408323	DC	
41	2000	53	3.66995	2E+09	424092	5408273	DC	
42	2000	55	3.66234	2E+09	424128	5408193	DC	
43	2000	57	3.6227	2E+09	424117	5408177	DC	
44	2000	58	3.61842	2E+09	424092	5408471	DC	
45	2000	61	3.59081	2E+09	424188	5408471	DC	
46	2000	66	3.57251	2E+09	424380	5408573	DC	
47	2000	67	3.5672	2E+09	424480	5408273	DC	
48	2000	69	3.5589	2E+09	424216	5408081	DC	
49	2000	70	3.5399	2E+09	424413	5408177	DC	
50	2000	73	3.53174	2E+09	423995	5408569	DC	
51	2000	75	3.52198	2E+09	424117	5408081	DC	
52	2000	79	3.50955	2E+09	424314	5408081	DC	
53	2000	80	3.50923	2E+09	423995	5408471	DC	
54	2000	83	3.49346	2E+09	424284	5408471	DC	
55	2000	85	3.48713	2E+09	424128	5408393	DC	
56	2000	87	3.46981	2E+09	424092	5408372	DC	
57	2000	88	3.46307	2E+09	424430	5408573	DC	
58	2000	89	3.45342	2E+09	424380	5408523	DC	
59	2000	90	3.44489	2E+09	423995	5408372	DC	
60	2000	91	3.42864	2E+09	424018	5408177	DC	

Discrete F	X	Y	Concentr	Elevation	Hill Heigh	Flagpole (	Averagin	Source Gr	Num Year	Net ID
	424499	5408579	0.18352	348	348	0	ANNUAL	EMRSS	5	
MINE	424930	5414223	0.18323	386	386	0	ANNUAL	EMRSS	5	
MINE	424480	5408573	0.18239	348	348	0	ANNUAL	EMRSS	5	
MINE	424430	5408573	0.18111	348	348	0	ANNUAL	EMRSS	5	
MINE	424380	5408573	0.17954	348	348	0	ANNUAL	EMRSS	5	
MINE	425330	5414223	0.1789	384.97	384.97	0	ANNUAL	EMRSS	5	
	424798	5414204	0.17782	389	389	0	ANNUAL	EMRSS	5	
MINE	424480	5408523	0.17732	348.55	348.55	0	ANNUAL	EMRSS	5	
MINE	424430	5408523	0.17619	348.58	348.58	0	ANNUAL	EMRSS	5	
MINE	424284	5408569	0.17522	347.79	347.79	0	ANNUAL	EMRSS	5	
TMA	425128	5414393	0.1748	383	383	0	ANNUAL	EMRSS	5	
MINE	424380	5408523	0.17477	348.61	348.61	0	ANNUAL	EMRSS	5	
MINE	425530	5414223	0.17436	382	382	0	ANNUAL	EMRSS	5	
TMA	425328	5414393	0.17288	381	381	0	ANNUAL	EMRSS	5	
MINE	425130	5414423	0.17268	383	383	0	ANNUAL	EMRSS	5	
MINE	424480	5408473	0.17236	349	349	0	ANNUAL	EMRSS	5	
MINE	424430	5408473	0.17129	349	349	0	ANNUAL	EMRSS	5	
MINE	425330	5414423	0.17081	381	381	0	ANNUAL	EMRSS	5	
MINE	424188	5408569	0.17027	347.04	347.04	0	ANNUAL	EMRSS	5	
MINE	425130	5414223	0.17005	392.46	395	0	ANNUAL	EMRSS	5	
MINE	424380	5408473	0.16995	349	349	0	ANNUAL	EMRSS	5	
TMA	425728	5414193	0.16967	381	381	0	ANNUAL	EMRSS	5	
TMA	424928	5414393	0.16891	387.14	387.14	0	ANNUAL	EMRSS	5	
MINE	424480	5408423	0.16803	349.87	349.87	0	ANNUAL	EMRSS	5	
MINE	425730	5414223	0.16754	381	381	0	ANNUAL	EMRSS	5	
MINE	424430	5408423	0.16718	350	350	0	ANNUAL	EMRSS	5	
MINE	424092	5408569	0.16681	347.79	347.79	0	ANNUAL	EMRSS	5	
TMA	425928	5414193	0.16658	380	380	0	ANNUAL	EMRSS	5	
MINE	424284	5408471	0.16652	349	349	0	ANNUAL	EMRSS	5	
MINE	424380	5408423	0.16594	350	350	0	ANNUAL	EMRSS	5	
TMA	425528	5414393	0.16592	380	380	0	ANNUAL	EMRSS	5	
TMA	426128	5414193	0.16519	380.01	380.01	0	ANNUAL	EMRSS	5	
TMA	426528	5414193	0.1649	378	378	0	ANNUAL	EMRSS	5	
MINE	424930	5414423	0.16479	388.43	388.43	0	ANNUAL	EMRSS	5	
TMA	426328	5414193	0.16446	379.9	379.9	0	ANNUAL	EMRSS	5	
MINE	425930	5414223	0.16442	380	380	0	ANNUAL	EMRSS	5	
MINE	425530	5414423	0.16396	380	380	0	ANNUAL	EMRSS	5	
MINE	424480	5408373	0.16315	350	350	0	ANNUAL	EMRSS	5	
MINE	426530	5414223	0.1629	378	378	0	ANNUAL	EMRSS	5	
MINE	424188	5408471	0.1628	349	349	0	ANNUAL	EMRSS	5	
MINE	423995	5408569	0.1628	347.85	347.85	0	ANNUAL	EMRSS	5	
MINE	426130	5414223	0.16232	380.57	380.57	0	ANNUAL	EMRSS	5	
MINE	424430	5408373	0.1623	350.05	350.05	0	ANNUAL	EMRSS	5	
MINE	426330	5414223	0.16223	380	380	0	ANNUAL	EMRSS	5	
MINE	424380	5408373	0.16205	351	351	0	ANNUAL	EMRSS	5	
TMA	424328	5408393	0.1618	350.25	350.25	0	ANNUAL	EMRSS	5	
TMA	426728	5414193	0.16074	378	378	0	ANNUAL	EMRSS	5	
MINE	423899	5408569	0.16001	348.73	348.73	0	ANNUAL	EMRSS	5	

MINE	424092	5408471	0.15981	350	350	0	ANNUAL	EMRSS	5
MINE	424284	5408372	0.15912	351	351	0	ANNUAL	EMRSS	5
MINE	426730	5414223	0.15904	378	378	0	ANNUAL	EMRSS	5
TMA	425328	5414593	0.15903	382	382	0	ANNUAL	EMRSS	5
MINE	424480	5408323	0.15898	350.68	350.68	0	ANNUAL	EMRSS	5
MINE	424430	5408323	0.15845	351	351	0	ANNUAL	EMRSS	5
MINE	423803	5408569	0.15803	349.96	349.96	0	ANNUAL	EMRSS	5
TMA	425728	5414393	0.15789	380	380	0	ANNUAL	EMRSS	5
MINE	424380	5408323	0.15761	351.24	351.24	0	ANNUAL	EMRSS	5
MINE	425330	5414623	0.15704	382.16	382.16	0	ANNUAL	EMRSS	5
MINE	423995	5408471	0.15636	350.49	350.49	0	ANNUAL	EMRSS	5
TMA	425128	5414593	0.15624	386.97	386.97	0	ANNUAL	EMRSS	5
MINE	425730	5414423	0.15601	380	380	0	ANNUAL	EMRSS	5
MINE	423707	5408569	0.15541	350.01	350.01	0	ANNUAL	EMRSS	5
TMA	425528	5414593	0.1552	379	379	0	ANNUAL	EMRSS	5
MINE	424188	5408372	0.15512	350.26	350.26	0	ANNUAL	EMRSS	5
MINE	424480	5408273	0.15495	351.34	351.34	0	ANNUAL	EMRSS	5
MINE	424430	5408273	0.15476	352	352	0	ANNUAL	EMRSS	5
TMA	424128	5408393	0.15471	350.25	350.25	0	ANNUAL	EMRSS	5
MINE	425130	5414623	0.15442	387	387	0	ANNUAL	EMRSS	5
MINE	424380	5408273	0.15411	352.4	352.4	0	ANNUAL	EMRSS	5
MINE	425530	5414623	0.15346	379	379	0	ANNUAL	EMRSS	5
TMA	426928	5414193	0.1534	378	378	0	ANNUAL	EMRSS	5
MINE	423899	5408471	0.15335	351.16	351.16	0	ANNUAL	EMRSS	5
	424792	5414601	0.15323	388	388	0	ANNUAL	EMRSS	5
MINE	423611	5408569	0.15309	350	350	0	ANNUAL	EMRSS	5
MINE	424092	5408372	0.15216	351.02	351.02	0	ANNUAL	EMRSS	5
TMA	425928	5414393	0.15202	381	381	0	ANNUAL	EMRSS	5
MINE	424284	5408273	0.15172	352.46	352.46	0	ANNUAL	EMRSS	5
MINE	426930	5414223	0.15158	378.5	378.5	0	ANNUAL	EMRSS	5
TMA	424928	5414593	0.15157	390.16	390.16	0	ANNUAL	EMRSS	5
MINE	424730	5414623	0.15122	388	388	0	ANNUAL	EMRSS	5
TMA	426528	5414393	0.15113	379	379	0	ANNUAL	EMRSS	5
TMA	426328	5414393	0.15112	380	380	0	ANNUAL	EMRSS	5
MINE	423803	5408471	0.15108	352.21	352.21	0	ANNUAL	EMRSS	5
MINE	423515	5408569	0.15087	350	350	0	ANNUAL	EMRSS	5
MINE	425930	5414423	0.15017	381	381	0	ANNUAL	EMRSS	5
TMA	426728	5414393	0.14979	378.03	378.03	0	ANNUAL	EMRSS	5
MINE	423995	5408372	0.14977	352.59	352.59	0	ANNUAL	EMRSS	5
TMA	423928	5408393	0.14972	353.49	353.49	0	ANNUAL	EMRSS	5
MINE	424930	5414623	0.1497	390.27	390.27	0	ANNUAL	EMRSS	5
TMA	426128	5414393	0.14936	382	382	0	ANNUAL	EMRSS	5
MINE	426530	5414423	0.14933	379	379	0	ANNUAL	EMRSS	5
MINE	426330	5414423	0.14927	380	380	0	ANNUAL	EMRSS	5
TMA	425328	5414793	0.14853	381.36	381.36	0	ANNUAL	EMRSS	5
MINE	423707	5408471	0.14849	352.27	352.27	0	ANNUAL	EMRSS	5
MINE	423418	5408569	0.14843	350	350	0	ANNUAL	EMRSS	5
MINE	424188	5408273	0.14838	352	352	0	ANNUAL	EMRSS	5
MINE	423899	5408372	0.14808	355.06	355.06	0	ANNUAL	EMRSS	5

Discrete F	X	Y	Concentr	Elevation	Hill Heigh	Flagpole (	Averagin	Source Gr	Rank	Net ID
	424499	5408579	0.78439	348	348	0	MONTH	EMRSS	1ST	
MINE	424480	5408573	0.78189	348	348	0	MONTH	EMRSS	1ST	
MINE	424430	5408573	0.78017	348	348	0	MONTH	EMRSS	1ST	
MINE	424380	5408573	0.77405	348	348	0	MONTH	EMRSS	1ST	
MINE	424480	5408523	0.7619	348.55	348.55	0	MONTH	EMRSS	1ST	
MINE	424430	5408523	0.76118	348.58	348.58	0	MONTH	EMRSS	1ST	
MINE	424380	5408523	0.7563	348.61	348.61	0	MONTH	EMRSS	1ST	
MINE	424284	5408569	0.74872	347.79	347.79	0	MONTH	EMRSS	1ST	
MINE	424480	5408473	0.74201	349	349	0	MONTH	EMRSS	1ST	
MINE	424430	5408473	0.74183	349	349	0	MONTH	EMRSS	1ST	
MINE	424380	5408473	0.73773	349	349	0	MONTH	EMRSS	1ST	
MINE	424430	5408423	0.72627	350	350	0	MONTH	EMRSS	1ST	
MINE	424480	5408423	0.72515	349.87	349.87	0	MONTH	EMRSS	1ST	
MINE	424380	5408423	0.72299	350	350	0	MONTH	EMRSS	1ST	
MINE	424284	5408471	0.71911	349	349	0	MONTH	EMRSS	1ST	
MINE	424188	5408569	0.71144	347.04	347.04	0	MONTH	EMRSS	1ST	
MINE	424380	5408373	0.70846	351	351	0	MONTH	EMRSS	1ST	
MINE	424430	5408373	0.70605	350.05	350.05	0	MONTH	EMRSS	1ST	
TMA	424328	5408393	0.70594	350.25	350.25	0	MONTH	EMRSS	1ST	
MINE	424480	5408373	0.70484	350	350	0	MONTH	EMRSS	1ST	
MINE	424284	5408372	0.69406	351	351	0	MONTH	EMRSS	1ST	
MINE	424188	5408471	0.69114	349	349	0	MONTH	EMRSS	1ST	
MINE	424430	5408323	0.69111	351	351	0	MONTH	EMRSS	1ST	
MINE	424380	5408323	0.6904	351.24	351.24	0	MONTH	EMRSS	1ST	
MINE	424480	5408323	0.68811	350.68	350.68	0	MONTH	EMRSS	1ST	
MINE	424380	5408273	0.67721	352.4	352.4	0	MONTH	EMRSS	1ST	
MINE	424430	5408273	0.67671	352	352	0	MONTH	EMRSS	1ST	
MINE	424092	5408569	0.67587	347.79	347.79	0	MONTH	EMRSS	1ST	
MINE	424480	5408273	0.6718	351.34	351.34	0	MONTH	EMRSS	1ST	
MINE	424188	5408372	0.66701	350.26	350.26	0	MONTH	EMRSS	1ST	
MINE	424284	5408273	0.66684	352.46	352.46	0	MONTH	EMRSS	1ST	
MINE	424092	5408471	0.66094	350	350	0	MONTH	EMRSS	1ST	
TMA	424128	5408393	0.65458	350.25	350.25	0	MONTH	EMRSS	1ST	
TMA	424328	5408193	0.65151	353.95	353.95	0	MONTH	EMRSS	1ST	
MINE	424413	5408177	0.65022	354	354	0	MONTH	EMRSS	1ST	
MINE	424188	5408273	0.64529	352	352	0	MONTH	EMRSS	1ST	
MINE	424314	5408177	0.64494	354	354	0	MONTH	EMRSS	1ST	
MINE	424092	5408372	0.63985	351.02	351.02	0	MONTH	EMRSS	1ST	
MINE	423995	5408569	0.63371	347.85	347.85	0	MONTH	EMRSS	1ST	
MINE	424216	5408177	0.63055	354	354	0	MONTH	EMRSS	1ST	
MINE	424413	5408081	0.62432	356	356	0	MONTH	EMRSS	1ST	
MINE	423995	5408471	0.62393	350.49	350.49	0	MONTH	EMRSS	1ST	
MINE	424092	5408273	0.62283	353	353	0	MONTH	EMRSS	1ST	
MINE	424314	5408081	0.61991	355.75	355.75	0	MONTH	EMRSS	1ST	
TMA	424128	5408193	0.61585	354	354	0	MONTH	EMRSS	1ST	
MINE	423995	5408372	0.61088	352.59	352.59	0	MONTH	EMRSS	1ST	
MINE	424117	5408177	0.60878	354	354	0	MONTH	EMRSS	1ST	
MINE	424216	5408081	0.60562	355	355	0	MONTH	EMRSS	1ST	

MINE	424413	5407985	0.59916	358	358	0	MONTH	EMRSS	1ST
MINE	423995	5408273	0.59722	354.72	354.72	0	MONTH	EMRSS	1ST
MINE	423899	5408569	0.5962	348.73	348.73	0	MONTH	EMRSS	1ST
MINE	424314	5407985	0.59415	357	357	0	MONTH	EMRSS	1ST
TMA	423928	5408393	0.59227	353.49	353.49	0	MONTH	EMRSS	1ST
MINE	424117	5408081	0.58994	355.87	355.87	0	MONTH	EMRSS	1ST
MINE	423899	5408471	0.58683	351.16	351.16	0	MONTH	EMRSS	1ST
MINE	424018	5408177	0.58612	355.51	355.51	0	MONTH	EMRSS	1ST
MINE	424216	5407985	0.58437	356.95	356.95	0	MONTH	EMRSS	1ST
MINE	423899	5408372	0.5822	355.06	355.06	0	MONTH	EMRSS	1ST
MINE	423899	5408273	0.57159	357.85	357.85	0	MONTH	EMRSS	1ST
MINE	424413	5407889	0.57132	359.98	359.98	0	MONTH	EMRSS	1ST
MINE	424314	5407889	0.56896	358.04	358.04	0	MONTH	EMRSS	1ST
MINE	424117	5407985	0.56881	357	357	0	MONTH	EMRSS	1ST
MINE	424018	5408081	0.56775	356.55	356.55	0	MONTH	EMRSS	1ST
TMA	423928	5408193	0.56582	357.59	357.59	0	MONTH	EMRSS	1ST
MINE	423803	5408569	0.56388	349.96	349.96	0	MONTH	EMRSS	1ST
MINE	424216	5407889	0.56101	358	358	0	MONTH	EMRSS	1ST
MINE	423919	5408177	0.56084	358	358	0	MONTH	EMRSS	1ST
MINE	423803	5408471	0.55361	352.21	352.21	0	MONTH	EMRSS	1ST
MINE	423803	5408372	0.55259	357.44	357.44	0	MONTH	EMRSS	1ST
MINE	424018	5407985	0.54932	357.54	357.54	0	MONTH	EMRSS	1ST
MINE	424117	5407889	0.54773	358	358	0	MONTH	EMRSS	1ST
MINE	424314	5407792	0.5433	360.23	373	0	MONTH	EMRSS	1ST
MINE	423919	5408081	0.54261	358	358	0	MONTH	EMRSS	1ST
MINE	424216	5407792	0.53834	359	359	0	MONTH	EMRSS	1ST
MINE	423803	5408273	0.53614	360	360	0	MONTH	EMRSS	1ST
MINE	423707	5408569	0.53229	350.01	350.01	0	MONTH	EMRSS	1ST
MINE	424018	5407889	0.53029	358.21	358.21	0	MONTH	EMRSS	1ST
MINE	424413	5407792	0.53007	366.77	369	0	MONTH	EMRSS	1ST
MINE	424117	5407792	0.52707	359.32	359.32	0	MONTH	EMRSS	1ST
MINE	423821	5408177	0.5264	360	360	0	MONTH	EMRSS	1ST
MINE	423919	5407985	0.52496	358	358	0	MONTH	EMRSS	1ST
TMA	423728	5408393	0.52492	355.6	355.6	0	MONTH	EMRSS	1ST
MINE	423707	5408471	0.52166	352.27	352.27	0	MONTH	EMRSS	1ST
	424461	5407786	0.52089	368.75	378	0	MONTH	EMRSS	1ST
MINE	423707	5408372	0.51647	356.34	356.34	0	MONTH	EMRSS	1ST
MINE	423821	5408081	0.51294	359	359	0	MONTH	EMRSS	1ST
MINE	424018	5407792	0.51172	359	359	0	MONTH	EMRSS	1ST
MINE	424216	5407696	0.50865	362.68	362.68	0	MONTH	EMRSS	1ST
MINE	423919	5407889	0.50767	358	358	0	MONTH	EMRSS	1ST
MINE	423611	5408569	0.50675	350	350	0	MONTH	EMRSS	1ST
MINE	423707	5408273	0.50567	358.98	358.98	0	MONTH	EMRSS	1ST
MINE	424314	5407696	0.50351	367.81	370	0	MONTH	EMRSS	1ST
MINE	424117	5407696	0.5032	360.57	360.57	0	MONTH	EMRSS	1ST
TMA	424128	5407693	0.50299	360.97	360.97	0	MONTH	EMRSS	1ST
TMA	423728	5408193	0.49772	359.84	359.84	0	MONTH	EMRSS	1ST
MINE	423821	5407985	0.4961	358	358	0	MONTH	EMRSS	1ST
MINE	423722	5408177	0.49499	359.06	359.06	0	MONTH	EMRSS	1ST

*** THE MAXIMUM 100 1-HR AVERAGE CONCENTRATION VALUES FOR SOURCE GROUP: HCND1 ***

RANK BY	YEAR	RANK	CONC	YYYYMM	XR	YR	TYPE	Ontario Reg. 419/05
1	1996	15	43.8487	2E+09	427128	5414193	DC	Discarded
1	1997	43	40.9513	2E+09	426128	5414193	DC	Discarded
1	1998	1	46.3775	2E+09	426728	5414193	DC	Discarded
1	1999	5	44.5006	2E+09	427128	5414193	DC	Discarded
1	2000	28	41.9175	2E+09	427128	5414193	DC	Discarded
2	1996	20	43.5411	2E+09	427130	5414223	DC	Discarded
2	1997	52	40.6201	2E+09	426130	5414223	DC	Discarded
2	1998	2	46.3404	2E+09	426528	5414193	DC	Discarded
2	1999	8	44.2089	2E+09	427130	5414223	DC	Discarded
2	2000	31	41.579	2E+09	427130	5414223	DC	Discarded
3	1996	23	43.2997	2E+09	426528	5414193	DC	Discarded
3	1997	66	39.7167	2E+09	427330	5414623	DC	Discarded
3	1998	3	46.0935	2E+09	426730	5414223	DC	Discarded
3	1999	35	41.3674	2E+09	426128	5414193	DC	Discarded
3	2000	85	38.9139	2E+09	426328	5414193	DC	Discarded
4	1996	24	42.8375	2E+09	426530	5414223	DC	Discarded
4	1997	71	39.3289	2E+09	426528	5414193	DC	Discarded
4	1998	4	45.9215	2E+09	426530	5414223	DC	Discarded
4	1999	41	41.0197	2E+09	426130	5414223	DC	Discarded
4	2000	91	38.8411	2E+09	426330	5414223	DC	Discarded
5	1996	51	40.6576	2E+09	426528	5414393	DC	Discarded
5	1997	84	38.9336	2E+09	426328	5414193	DC	Discarded
5	1998	6	44.225	2E+09	427128	5414193	DC	Discarded
5	1999	42	40.9976	2E+09	427128	5414393	DC	Discarded
5	2000	94	38.6589	2E+09	426728	5414193	DC	Discarded
6	1996	57	40.3064	2E+09	427128	5414393	DC	Discarded
6	1997	89	38.8614	2E+09	426330	5414223	DC	Discarded
6	1998	7	44.2215	2E+09	426928	5414193	DC	Discarded
6	1999	44	40.9467	2E+09	426328	5414193	DC	Discarded
6	2000	97	38.5448	2E+09	426130	5414423	DC	Discarded
7	1996	60	40.1304	2E+09	426530	5414423	DC	Discarded
7	1997	99	38.4415	2E+09	427330	5414423	DC	Discarded
7	1998	9	44.2044	2E+09	426928	5414193	DC	Discarded
7	1999	45	40.9249	2E+09	426330	5414223	DC	Discarded
7	2000	100	38.4113	2E+09	426128	5414393	DC	Discarded
8	1996	65	39.7494	2E+09	427130	5414423	DC	Discarded
8	1998	10	44.0335	2E+09	426930	5414223	DC	Discarded
8	1999	56	40.444	2E+09	427130	5414423	DC	Discarded
9	1998	11	44.0157	2E+09	426930	5414223	DC	Discarded
9	1999	63	39.88	2E+09	426328	5414393	DC	Discarded
10	1998	12	43.9922	2E+09	426728	5414393	DC	Discarded
10	1999	68	39.5982	2E+09	426330	5414423	DC	Discarded
11	1998	13	43.9757	2E+09	426528	5414393	DC	Discarded
11	1999	70	39.3602	2E+09	426728	5414193	DC	Discarded
12	1998	14	43.9327	2E+09	427130	5414223	DC	Discarded
12	1999	92	38.8303	2E+09	426730	5414223	DC	Discarded

13	1998	16	43.8432	2E+09	426928	5414393	DC	Discarded
14	1998	17	43.8206	2E+09	426928	5414393	DC	Discarded
15	1998	18	43.7394	2E+09	426730	5414423	DC	Discarded
16	1998	19	43.5532	2E+09	426930	5414423	DC	Discarded
17	1998	21	43.5299	2E+09	426930	5414423	DC	Discarded
18	1998	22	43.4771	2E+09	426530	5414423	DC	Discarded
19	1998	25	42.0696	2E+09	426728	5414193	DC	Discarded
20	1998	26	42.0438	2E+09	426928	5414593	DC	Discarded
21	1998	27	42.0171	2E+09	426928	5414593	DC	Discarded
22	1998	29	41.6958	2E+09	426930	5414623	DC	Discarded
23	1998	30	41.6685	2E+09	426930	5414623	DC	Discarded
24	1998	32	41.5659	2E+09	426730	5414223	DC	Discarded
25	1998	33	41.467	2E+09	426728	5414593	DC	Discarded
26	1998	34	41.4263	2E+09	426528	5414593	DC	Discarded
27	1998	36	41.2686	2E+09	427128	5414393	DC	Discarded
28	1998	37	41.2536	2E+09	427128	5414393	DC	Discarded
29	1998	38	41.2071	2E+09	426730	5414623	DC	Discarded
30	1998	39	41.171	2E+09	427130	5414423	DC	Discarded
31	1998	40	41.1555	2E+09	427130	5414423	DC	Discarded
32	1998	46	40.9241	2E+09	426728	5414393	DC	Discarded
33	1998	47	40.8935	2E+09	427128	5414393	DC	Highest
34	1998	48	40.8837	2E+09	426530	5414623	DC	
35	1998	49	40.7847	2E+09	427130	5414423	DC	
36	1998	50	40.7426	2E+09	427128	5414393	DC	
37	1998	53	40.4681	2E+09	427128	5414593	DC	
38	1998	54	40.4543	2E+09	426730	5414423	DC	
39	1998	55	40.4497	2E+09	427128	5414593	DC	
40	1998	58	40.1925	2E+09	427130	5414423	DC	
41	1998	59	40.1442	2E+09	427130	5414623	DC	
42	1998	61	40.1255	2E+09	427130	5414623	DC	
43	1998	62	40.0272	2E+09	427128	5414593	DC	
44	1998	64	39.8273	2E+09	427330	5414623	DC	
45	1998	67	39.6965	2E+09	427130	5414623	DC	
46	1998	69	39.5804	2E+09	426728	5414593	DC	
47	1998	72	39.3131	2E+09	427130	5414223	DC	
48	1998	73	39.3018	2E+09	427130	5414223	DC	
49	1998	74	39.2373	2E+09	426928	5414793	DC	
50	1998	75	39.2083	2E+09	426928	5414793	DC	
51	1998	76	39.1351	2E+09	427128	5414193	DC	
52	1998	77	39.1244	2E+09	427128	5414193	DC	
53	1998	78	39.1078	2E+09	426730	5414623	DC	
54	1998	79	39.0659	2E+09	427128	5414193	DC	
55	1998	80	39.0359	2E+09	427130	5414223	DC	
56	1998	81	39.0314	2E+09	427330	5414223	DC	
57	1998	82	39.0282	2E+09	426328	5414193	DC	
58	1998	83	38.9421	2E+09	426328	5414193	DC	
59	1998	86	38.8711	2E+09	426930	5414823	DC	
60	1998	87	38.8709	2E+09	427128	5414193	DC	
61	1998	88	38.8701	2E+09	426330	5414223	DC	

*** THE MAXIMUM 100 24-HR AVERAGE CONCENTRATION VALUES FOR SOURCE GROUP: HCND1 ***

RANK BY	YEAR	RANK	CONC	YYYYMM	XR	YR	TYPE	Ontario Reg. 419/05
1	1996	10	3.48109	2E+09	428730	5414223	DC	Discarded
1	1997	1	4.14159	2E+09	427330	5414223	DC	Discarded
1	1998	17	3.43636	2E+09	425530	5414223	DC	Discarded
1	1999	11	3.47384	2E+09	426628	5407693	DC	Discarded
1	2000	4	3.75229	2E+09	426928	5414193	DC	Discarded
2	1996	38	3.21658	2E+09	428628	5414193	DC	Discarded
2	1997	2	4.04608	2E+09	427530	5414623	DC	Discarded
2	1998	43	3.18561	2E+09	426328	5414193	DC	
2	1999	13	3.46549	2E+09	426683	5407696	DC	Discarded
2	2000	5	3.71157	2E+09	427930	5414223	DC	Highest
3	1996	57	3.10225	2E+09	427628	5414193	DC	Discarded
3	1997	3	3.91723	2E+09	427530	5414823	DC	Discarded
3	1998	48	3.13429	2E+09	426330	5414223	DC	
3	1999	19	3.42654	2E+09	426781	5407696	DC	Discarded
3	2000	6	3.70218	2E+09	426930	5414223	DC	
4	1996	97	2.91848	2E+09	428730	5414423	DC	Discarded
4	1997	7	3.60342	2E+09	427330	5414423	DC	
4	1998	58	3.10124	2E+09	425330	5414423	DC	
4	1999	21	3.40311	2E+09	426584	5407696	DC	Discarded
4	2000	9	3.56381	2E+09	428130	5414623	DC	
5	1997	8	3.57224	2E+09	427330	5414623	DC	
5	1998	60	3.09047	2E+09	425328	5414593	DC	
5	1999	24	3.36351	2E+09	426683	5407600	DC	Discarded
5	2000	12	3.47035	2E+09	427128	5414193	DC	
6	1997	14	3.46445	2E+09	427628	5415193	DC	
6	1998	65	3.05416	2E+09	425330	5414623	DC	
6	1999	26	3.34485	2E+09	426728	5414193	DC	
6	2000	15	3.45244	2E+09	426128	5414193	DC	
7	1997	16	3.45138	2E+09	425728	5414193	DC	
7	1998	67	3.04812	2E+09	425328	5414393	DC	
7	1999	28	3.32967	2E+09	426781	5407600	DC	
7	2000	18	3.43358	2E+09	428128	5414693	DC	
8	1997	22	3.37605	2E+09	427530	5415023	DC	
8	1998	68	3.04485	2E+09	426128	5414193	DC	
8	1999	29	3.32069	2E+09	426730	5414223	DC	
8	2000	20	3.41071	2E+09	427130	5414223	DC	
9	1997	23	3.3725	2E+09	425730	5414223	DC	
9	1998	72	3.03614	2E+09	426130	5414223	DC	
9	1999	30	3.3041	2E+09	426584	5407600	DC	
9	2000	25	3.34639	2E+09	428130	5414423	DC	
10	1997	31	3.27461	2E+09	427530	5414423	DC	
10	1998	76	3.01907	2E+09	425528	5414393	DC	
10	1999	33	3.26779	2E+09	426683	5407504	DC	
10	2000	27	3.33234	2E+09	426130	5414223	DC	
11	1997	32	3.26881	2E+09	427330	5414223	DC	
11	1998	77	3.00821	2E+09	425530	5414423	DC	

11	1999	37	3.24041	2E+09	426781	5407504	DC
11	2000	35	3.25017	2E+09	425930	5414823	DC
12	1997	34	3.25131	2E+09	427330	5414823	DC
12	1998	87	2.94188	2E+09	426928	5414193	DC
12	1999	40	3.19534	2E+09	426584	5407504	DC
12	2000	36	3.24548	2E+09	425928	5414793	DC
13	1997	63	3.07263	2E+09	426728	5414193	DC
13	1998	93	2.92883	2E+09	426328	5414193	DC
13	1999	41	3.19071	2E+09	426683	5407408	DC
13	2000	39	3.21474	2E+09	427330	5414223	DC
14	1997	71	3.04226	2E+09	426730	5414223	DC
14	1998	95	2.92577	2E+09	425530	5414223	DC
14	1999	42	3.18659	2E+09	427530	5414223	DC
14	2000	45	3.17692	2E+09	425930	5414623	DC
15	1997	85	2.95901	2E+09	425530	5414623	DC
15	1998	96	2.9199	2E+09	426330	5414423	DC
15	1999	44	3.18405	2E+09	426128	5414193	DC
15	2000	47	3.13582	2E+09	426928	5414393	DC
16	1997	86	2.95165	2E+09	425528	5414593	DC
16	1998	100	2.91265	2E+09	426330	5414223	DC
16	1999	46	3.15759	2E+09	426781	5407408	DC
16	2000	49	3.12528	2E+09	425928	5414993	DC
17	1999	52	3.12364	2E+09	426728	5414393	DC
17	2000	50	3.12389	2E+09	425928	5414593	DC
18	1999	53	3.119	2E+09	426683	5407312	DC
18	2000	51	3.12375	2E+09	428330	5415023	DC
19	1999	55	3.10938	2E+09	426528	5414193	DC
19	2000	54	3.11111	2E+09	426930	5414423	DC
20	1999	56	3.10348	2E+09	426584	5407408	DC
20	2000	61	3.08561	2E+09	425930	5415023	DC
21	1999	59	3.09664	2E+09	426730	5414423	DC
21	2000	62	3.07408	2E+09	427930	5414423	DC
22	1999	64	3.05534	2E+09	426530	5414223	DC
22	2000	66	3.0507	2E+09	426928	5414593	DC
23	1999	73	3.02999	2E+09	426683	5407216	DC
23	2000	69	3.04467	2E+09	427128	5414393	DC
24	1999	74	3.0252	2E+09	426584	5407312	DC
24	2000	70	3.04317	2E+09	428130	5414823	DC
25	1999	78	2.99359	2E+09	427628	5414193	DC
25	2000	75	3.02479	2E+09	426930	5414623	DC
26	1999	79	2.98975	2E+09	426628	5407193	DC
26	2000	80	2.98886	2E+09	427130	5414423	DC
27	1999	82	2.97604	2E+09	426880	5407696	DC
27	2000	81	2.98201	2E+09	427330	5414223	DC
28	1999	84	2.9667	2E+09	426928	5414193	DC
28	2000	83	2.96748	2E+09	427330	5414423	DC
29	1999	88	2.93946	2E+09	426930	5414223	DC
29	2000	98	2.91783	2E+09	426928	5414793	DC
30	1999	89	2.93659	2E+09	426584	5407216	DC

*** THE MAXIMUM 100 1-HR AVERAGE CONCENTRATION VALUES FOR SOURCE GROUP: HCND2 ***

RANK BY	YEAR	RANK	CONC	YYYYMM	XR	YR	TYPE	Ontario Reg. 419/05
1	1996	16	40.1211	2E+09	426528	5414193	DC	Discarded
1	1997	52	36.8893	2E+09	426128	5414193	DC	Discarded
1	1998	1	42.646	2E+09	426728	5414193	DC	Discarded
1	1999	18	39.827	2E+09	427128	5414193	DC	Discarded
1	2000	36	37.8147	2E+09	427128	5414193	DC	Discarded
2	1996	20	39.7092	2E+09	426530	5414223	DC	Discarded
2	1997	53	36.7927	2E+09	426528	5414193	DC	Discarded
2	1998	2	42.6091	2E+09	426528	5414193	DC	Discarded
2	1999	21	39.589	2E+09	427130	5414223	DC	Discarded
2	2000	39	37.5316	2E+09	427130	5414223	DC	Discarded
3	1996	23	39.3039	2E+09	427128	5414193	DC	Discarded
3	1997	57	36.6435	2E+09	426130	5414223	DC	Discarded
3	1998	3	42.3934	2E+09	426730	5414223	DC	Discarded
3	1999	45	37.0802	2E+09	427128	5414393	DC	Discarded
3	2000	68	36.344	2E+09	426728	5414193	DC	Discarded
4	1996	25	39.0525	2E+09	427130	5414223	DC	Discarded
4	1997	76	35.9964	2E+09	427330	5414623	DC	Discarded
4	1998	4	42.2415	2E+09	426530	5414223	DC	Discarded
4	1999	48	36.9825	2E+09	426128	5414193	DC	Discarded
4	2000	81	35.8726	2E+09	426730	5414223	DC	Discarded
5	1996	37	37.7747	2E+09	426528	5414393	DC	Discarded
5	1997	78	35.9773	2E+09	426530	5414223	DC	Discarded
5	1998	5	41.0502	2E+09	426928	5414193	DC	Discarded
5	1999	49	36.9638	2E+09	426728	5414193	DC	Discarded
6	1996	40	37.3116	2E+09	426530	5414423	DC	Discarded
6	1998	6	41.0221	2E+09	426928	5414193	DC	Discarded
6	1999	54	36.7884	2E+09	426328	5414193	DC	Discarded
7	1996	62	36.5159	2E+09	427128	5414393	DC	Discarded
7	1998	7	40.8756	2E+09	426930	5414223	DC	Discarded
7	1999	55	36.7856	2E+09	426330	5414223	DC	Discarded
8	1996	73	36.071	2E+09	427130	5414423	DC	Discarded
8	1998	8	40.8469	2E+09	426930	5414223	DC	Discarded
8	1999	56	36.7239	2E+09	426130	5414223	DC	Discarded
9	1996	98	35.3762	2E+09	426528	5414593	DC	Discarded
9	1998	9	40.5407	2E+09	426528	5414393	DC	Discarded
9	1999	58	36.6396	2E+09	427130	5414423	DC	Discarded
10	1998	10	40.5395	2E+09	426728	5414393	DC	Discarded
10	1999	63	36.4989	2E+09	426730	5414223	DC	Discarded
11	1998	11	40.5126	2E+09	426928	5414393	DC	Discarded
11	1999	80	35.9546	2E+09	426328	5414393	DC	Discarded
12	1998	12	40.4789	2E+09	426928	5414393	DC	Discarded
12	1999	86	35.7447	2E+09	426330	5414423	DC	Discarded
13	1998	13	40.3234	2E+09	426730	5414423	DC	Discarded
13	1999	94	35.4866	2E+09	426728	5414393	DC	Discarded
14	1998	14	40.2502	2E+09	426930	5414423	DC	Discarded
14	1999	96	35.4721	2E+09	426528	5414193	DC	Discarded

15	1998	15	40.216	2E+09	426930	5414423	DC	Discarded
15	1999	97	35.4663	2E+09	426528	5414193	DC	Discarded
16	1998	17	40.1103	2E+09	426530	5414423	DC	Discarded
17	1998	19	39.762	2E+09	427128	5414193	DC	Discarded
18	1998	22	39.5214	2E+09	427130	5414223	DC	Discarded
19	1998	24	39.2118	2E+09	426728	5414193	DC	Discarded
20	1998	26	38.8413	2E+09	426928	5414593	DC	Discarded
21	1998	27	38.8043	2E+09	426928	5414593	DC	Discarded
22	1998	28	38.7786	2E+09	426730	5414223	DC	Discarded
23	1998	29	38.5343	2E+09	426930	5414623	DC	Discarded
24	1998	30	38.4969	2E+09	426930	5414623	DC	Discarded
25	1998	31	38.3598	2E+09	426728	5414593	DC	Discarded
26	1998	32	38.3409	2E+09	426528	5414593	DC	Discarded
27	1998	33	38.1314	2E+09	426730	5414623	DC	Discarded
28	1998	34	38.1174	2E+09	426728	5414393	DC	Discarded
29	1998	35	37.8803	2E+09	426530	5414623	DC	Discarded
30	1998	38	37.7222	2E+09	426730	5414423	DC	Discarded
31	1998	41	37.2778	2E+09	427128	5414393	DC	Discarded
32	1998	42	37.2552	2E+09	427128	5414393	DC	Discarded
33	1998	43	37.1885	2E+09	427130	5414423	DC	Discarded
34	1998	44	37.1653	2E+09	427130	5414423	DC	Discarded
35	1998	46	37.0156	2E+09	427128	5414393	DC	Highest
36	1998	47	37.0036	2E+09	427128	5414393	DC	
37	1998	50	36.9167	2E+09	427130	5414423	DC	
38	1998	51	36.8942	2E+09	426728	5414593	DC	
39	1998	59	36.6123	2E+09	427128	5414593	DC	
40	1998	60	36.5866	2E+09	427128	5414593	DC	
41	1998	61	36.5616	2E+09	427130	5414423	DC	
42	1998	64	36.4908	2E+09	426730	5414623	DC	
43	1998	65	36.3984	2E+09	426928	5414793	DC	
44	1998	66	36.3604	2E+09	426928	5414793	DC	
45	1998	67	36.3471	2E+09	427130	5414623	DC	
46	1998	69	36.321	2E+09	427130	5414623	DC	
47	1998	70	36.2932	2E+09	427128	5414593	DC	
48	1998	71	36.0839	2E+09	426930	5414823	DC	
49	1998	72	36.0809	2E+09	426728	5414793	DC	
50	1998	74	36.0457	2E+09	426930	5414823	DC	
51	1998	75	36.0212	2E+09	427130	5414623	DC	
52	1998	77	35.9942	2E+09	426528	5414793	DC	
53	1998	79	35.9671	2E+09	427330	5414623	DC	
54	1998	82	35.8003	2E+09	426730	5414823	DC	
55	1998	83	35.7965	2E+09	427130	5414223	DC	
56	1998	84	35.7784	2E+09	427130	5414223	DC	
57	1998	85	35.7456	2E+09	427128	5414193	DC	
58	1998	87	35.6677	2E+09	427128	5414193	DC	
59	1998	88	35.6503	2E+09	427128	5414193	DC	
60	1998	89	35.6483	2E+09	426328	5414193	DC	
61	1998	90	35.6103	2E+09	427130	5414223	DC	
62	1998	91	35.5269	2E+09	427330	5414223	DC	

*** THE MAXIMUM 100 24-HR AVERAGE CONCENTRATION VALUES FOR SOURCE GROUP: HCND2 ***

RANK BY	YEAR	RANK	CONC	YYYYMM	XR	YR	TYPE	Ontario Reg. 419/05
1	1996	20	3.29755	2E+09	428730	5414223	DC	Discarded
1	1997	1	3.9336	2E+09	427330	5414223	DC	Discarded
1	1998	30	3.21715	2E+09	425530	5414223	DC	Discarded
1	1999	6	3.54258	2E+09	426628	5407693	DC	Discarded
1	2000	3	3.68892	2E+09	426928	5414193	DC	Discarded
2	1996	47	3.06046	2E+09	428628	5414193	DC	Discarded
2	1997	2	3.81897	2E+09	427530	5414623	DC	Discarded
2	1998	69	2.94455	2E+09	426328	5414193	DC	
2	1999	7	3.51973	2E+09	426683	5407696	DC	Discarded
2	2000	5	3.64019	2E+09	426930	5414223	DC	Discarded
3	1997	4	3.68688	2E+09	427530	5414823	DC	Discarded
3	1998	77	2.90722	2E+09	426128	5414193	DC	
3	1999	8	3.47942	2E+09	426781	5407696	DC	Discarded
3	2000	9	3.47867	2E+09	427930	5414223	DC	Highest
4	1997	12	3.40149	2E+09	427330	5414423	DC	
4	1998	81	2.90092	2E+09	426130	5414223	DC	
4	1999	10	3.47814	2E+09	426584	5407696	DC	Discarded
4	2000	13	3.37895	2E+09	427128	5414193	DC	
5	1997	16	3.34665	2E+09	427330	5414623	DC	
5	1998	82	2.90076	2E+09	426330	5414223	DC	
5	1999	11	3.41451	2E+09	426683	5407600	DC	Discarded
5	2000	17	3.32125	2E+09	427130	5414223	DC	
6	1997	22	3.2817	2E+09	427628	5415193	DC	
6	1998	90	2.86874	2E+09	425330	5414423	DC	
6	1999	14	3.37875	2E+09	426781	5407600	DC	Discarded
6	2000	18	3.31758	2E+09	428130	5414623	DC	
7	1997	28	3.22534	2E+09	427530	5414423	DC	
7	1998	91	2.86469	2E+09	425328	5414593	DC	
7	1999	15	3.37511	2E+09	426584	5407600	DC	Discarded
7	2000	23	3.27849	2E+09	426128	5414193	DC	
8	1997	29	3.22345	2E+09	427530	5415023	DC	
8	1998	93	2.85334	2E+09	426328	5414193	DC	
8	1999	19	3.31559	2E+09	426683	5407504	DC	Discarded
8	2000	31	3.21571	2E+09	428128	5414693	DC	
9	1997	35	3.16715	2E+09	425728	5414193	DC	
9	1998	98	2.83826	2E+09	425330	5414623	DC	
9	1999	21	3.28572	2E+09	426781	5407504	DC	Discarded
9	2000	33	3.18533	2E+09	427330	5414223	DC	
10	1997	38	3.15773	2E+09	427330	5414223	DC	
10	1998	100	2.83528	2E+09	426330	5414223	DC	
10	1999	24	3.26228	2E+09	426584	5407504	DC	Discarded
10	2000	34	3.17528	2E+09	426130	5414223	DC	
11	1997	42	3.10268	2E+09	425730	5414223	DC	
11	1999	25	3.25114	2E+09	426728	5414193	DC	
11	2000	39	3.15179	2E+09	428130	5414423	DC	
12	1997	46	3.06449	2E+09	427330	5414823	DC	

12	1999	26	3.23522	2E+09	426683	5407408	DC
12	2000	40	3.14994	2E+09	426928	5414393	DC
13	1997	56	3.00979	2E+09	426728	5414193	DC
13	1999	27	3.2265	2E+09	426730	5414223	DC
13	2000	41	3.12329	2E+09	426930	5414423	DC
14	1997	62	2.97987	2E+09	426730	5414223	DC
14	1999	32	3.19915	2E+09	426781	5407408	DC
14	2000	48	3.05794	2E+09	425930	5414823	DC
15	1999	36	3.16634	2E+09	426584	5407408	DC
15	2000	49	3.05757	2E+09	425928	5414793	DC
16	1999	37	3.16007	2E+09	426683	5407312	DC
16	2000	53	3.03134	2E+09	426928	5414593	DC
17	1999	43	3.09854	2E+09	426128	5414193	DC
17	2000	54	3.01769	2E+09	425930	5414623	DC
18	1999	44	3.0839	2E+09	426584	5407312	DC
18	2000	57	3.00437	2E+09	426930	5414623	DC
19	1999	45	3.06779	2E+09	426683	5407216	DC
19	2000	63	2.97949	2E+09	427930	5414423	DC
20	1999	50	3.05183	2E+09	426528	5414193	DC
20	2000	64	2.977	2E+09	425928	5414593	DC
21	1999	51	3.03818	2E+09	426628	5407193	DC
21	2000	65	2.97007	2E+09	427128	5414393	DC
22	1999	52	3.03709	2E+09	426728	5414393	DC
22	2000	68	2.94805	2E+09	427330	5414423	DC
23	1999	55	3.01017	2E+09	426730	5414423	DC
23	2000	70	2.93806	2E+09	425928	5414993	DC
24	1999	58	3.00036	2E+09	426530	5414223	DC
24	2000	74	2.92081	2E+09	428330	5415023	DC
25	1999	59	2.99831	2E+09	426880	5407696	DC
25	2000	76	2.91716	2E+09	427130	5414423	DC
26	1999	60	2.99111	2E+09	426584	5407216	DC
26	2000	79	2.90548	2E+09	428130	5414823	DC
27	1999	61	2.9832	2E+09	427530	5414223	DC
27	2000	80	2.90227	2E+09	425930	5415023	DC
28	1999	66	2.96664	2E+09	426683	5407119	DC
28	2000	83	2.89966	2E+09	427457	5407714	DC
29	1999	67	2.95435	2E+09	426880	5407600	DC
29	2000	88	2.88114	2E+09	427330	5414223	DC
30	1999	71	2.93589	2E+09	426928	5414193	DC
30	2000	89	2.87553	2E+09	426928	5414793	DC
31	1999	72	2.93049	2E+09	426781	5407312	DC
31	2000	95	2.84916	2E+09	426189	5407696	DC
32	1999	73	2.93003	2E+09	426683	5407023	DC
32	2000	96	2.84378	2E+09	426930	5414823	DC
33	1999	75	2.91969	2E+09	426880	5407504	DC
34	1999	78	2.90702	2E+09	426930	5414223	DC
35	1999	84	2.89126	2E+09	426880	5407023	DC
36	1999	85	2.89017	2E+09	426584	5407119	DC
37	1999	86	2.88966	2E+09	426781	5407216	DC

*** THE MAXIMUM 100 24-HR AVERAGE CONCENTRATION VALUES FOR SOURCE GROUP: INPITHR ***

RANK BY	YEAR	RANK	CONC	YYYYMM	XR	YR	TYPE	Ontario Reg. 419/05
1	1998	1	4.33136	2E+09	423611	5408569	DC	Discarded
1	1999	55	3.24898	2E+09	424380	5408573	DC	Discarded
1	2000	43	3.34187	2E+09	423899	5408569	DC	Discarded
2	1998	2	4.31702	2E+09	423707	5408569	DC	Discarded
2	1999	56	3.24476	2E+09	424499	5408579	DC	Discarded
2	2000	44	3.33863	2E+09	423803	5408569	DC	Discarded
3	1998	3	4.29442	2E+09	423515	5408569	DC	Discarded
3	1999	57	3.24358	2E+09	424430	5408573	DC	Discarded
3	2000	49	3.29267	2E+09	423995	5408569	DC	Discarded
4	1998	4	4.24823	2E+09	423803	5408569	DC	Discarded
4	1999	59	3.23136	2E+09	424480	5408573	DC	Discarded
4	2000	53	3.25421	2E+09	423707	5408569	DC	Discarded
5	1998	5	4.21032	2E+09	423418	5408569	DC	Discarded
5	1999	62	3.22396	2E+09	424284	5408569	DC	Discarded
5	2000	63	3.20129	2E+09	424092	5408569	DC	Discarded
6	1998	6	4.09113	2E+09	423899	5408569	DC	Discarded
6	1999	66	3.16754	2E+09	424188	5408569	DC	Discarded
6	2000	64	3.17838	2E+09	423707	5408471	DC	Discarded
7	1998	7	4.08998	2E+09	423322	5408569	DC	Discarded
7	1999	70	3.14014	2E+09	424499	5408579	DC	Highest
7	2000	65	3.17325	2E+09	423803	5408471	DC	Discarded
8	1998	8	4.08282	2E+09	423328	5408593	DC	Discarded
8	1999	73	3.12286	2E+09	424380	5408523	DC	
8	2000	72	3.12609	2E+09	423611	5408569	DC	Discarded
9	1998	9	4.02279	2E+09	423515	5408471	DC	Discarded
9	1999	74	3.12205	2E+09	424480	5408573	DC	
9	2000	76	3.11354	2E+09	423611	5408471	DC	Discarded
10	1998	10	4.00791	2E+09	423418	5408471	DC	Discarded
10	1999	75	3.11554	2E+09	424092	5408569	DC	
10	2000	80	3.0931	2E+09	423899	5408471	DC	Discarded
11	1998	11	3.98695	2E+09	423322	5408471	DC	Discarded
11	1999	78	3.11033	2E+09	424430	5408523	DC	
11	2000	90	3.03561	2E+09	424188	5408569	DC	Discarded
12	1998	12	3.98366	2E+09	423611	5408471	DC	Discarded
12	1999	79	3.09609	2E+09	424430	5408573	DC	
12	2000	92	3.0296	2E+09	423728	5408393	DC	Discarded
13	1998	13	3.96483	2E+09	423226	5408569	DC	Discarded
13	1999	81	3.09205	2E+09	424480	5408523	DC	
13	2000	94	3.01517	2E+09	423515	5408471	DC	Discarded
14	1998	14	3.93342	2E+09	423226	5408471	DC	Discarded
14	1999	85	3.0829	2E+09	424499	5408579	DC	
15	1998	15	3.91576	2E+09	423707	5408471	DC	Discarded
15	1999	86	3.05789	2E+09	424380	5408573	DC	
16	1998	16	3.90461	2E+09	423995	5408569	DC	Discarded
16	1999	87	3.04917	2E+09	424480	5408573	DC	
17	1998	17	3.85094	2E+09	423130	5408471	DC	Discarded

17	1999	88	3.04638	2E+09	424480	5408523	DC	
18	1998	18	3.81666	2E+09	423130	5408569	DC	Discarded
18	1999	89	3.03824	2E+09	424480	5408523	DC	
19	1998	19	3.792	2E+09	423328	5408393	DC	Discarded
19	1999	91	3.03052	2E+09	424430	5408523	DC	
20	1998	20	3.78177	2E+09	423803	5408471	DC	Discarded
20	1999	97	3.00979	2E+09	423995	5408569	DC	
21	1998	21	3.77744	2E+09	423128	5408393	DC	Discarded
21	1999	98	3.00764	2E+09	424480	5408473	DC	
22	1998	22	3.77502	2E+09	423128	5408593	DC	Discarded
22	1999	99	3.00393	2E+09	424380	5408523	DC	
23	1998	23	3.76698	2E+09	423226	5408372	DC	Discarded
23	1999	100	3.00282	2E+09	424284	5408471	DC	
24	1998	24	3.75406	2E+09	423130	5408372	DC	Discarded
25	1998	25	3.72672	2E+09	423322	5408372	DC	Discarded
26	1998	26	3.72664	2E+09	423528	5408393	DC	Discarded
27	1998	27	3.70927	2E+09	424092	5408569	DC	Discarded
28	1998	28	3.69267	2E+09	423418	5408372	DC	Discarded
29	1998	29	3.64482	2E+09	423515	5408372	DC	Discarded
30	1998	30	3.59029	2E+09	423899	5408471	DC	Discarded
31	1998	31	3.57799	2E+09	422930	5408423	DC	Discarded
32	1998	32	3.57589	2E+09	422928	5408393	DC	Discarded
33	1998	33	3.57041	2E+09	423611	5408372	DC	Discarded
34	1998	34	3.54534	2E+09	423728	5408393	DC	Discarded
35	1998	35	3.53355	2E+09	423130	5408273	DC	Discarded
36	1998	36	3.49756	2E+09	423226	5408273	DC	Discarded
37	1998	37	3.47586	2E+09	423707	5408372	DC	Discarded
38	1998	38	3.46591	2E+09	424188	5408569	DC	Discarded
39	1998	39	3.40193	2E+09	422930	5408223	DC	Discarded
40	1998	40	3.38408	2E+09	423322	5408273	DC	Discarded
41	1998	41	3.38286	2E+09	423995	5408471	DC	Discarded
42	1998	42	3.34457	2E+09	422928	5408193	DC	Discarded
43	1998	45	3.32283	2E+09	423803	5408372	DC	Discarded
44	1998	46	3.31894	2E+09	423418	5408273	DC	Discarded
45	1998	47	3.31858	2E+09	422928	5408593	DC	Discarded
46	1998	48	3.30539	2E+09	423128	5408193	DC	Discarded
47	1998	50	3.28724	2E+09	422730	5408223	DC	Discarded
48	1998	51	3.27378	2E+09	422728	5408393	DC	Discarded
49	1998	52	3.25543	2E+09	422728	5408193	DC	Discarded
50	1998	54	3.25232	2E+09	423130	5408177	DC	Discarded
51	1998	58	3.24235	2E+09	424284	5408569	DC	Discarded
52	1998	60	3.23059	2E+09	422730	5408423	DC	Discarded
53	1998	61	3.22783	2E+09	423515	5408273	DC	Discarded
54	1998	67	3.16275	2E+09	424092	5408471	DC	Discarded
55	1998	68	3.16173	2E+09	423229	5408177	DC	Discarded
56	1998	69	3.1472	2E+09	423928	5408393	DC	Discarded
57	1998	71	3.12839	2E+09	423611	5408273	DC	Discarded
58	1998	77	3.11333	2E+09	423899	5408372	DC	Discarded
59	1998	82	3.08939	2E+09	423328	5408193	DC	Discarded

*** THE MAXIMUM 100 24-HR AVERAGE CONCENTRATION VALUES FOR SOURCE GROUP: LEACH1 ***

RANK BY	YEAR	RANK	CONC	YYYYMM	XR	YR	TYPE	Ontario Reg. 419/05
1	1996	16	3.42143	2E+09	428628	5414193	DC	Discarded
1	1997	1	3.80966	2E+09	427330	5414223	DC	Discarded
1	1998	73	2.98776	2E+09	427628	5414193	DC	Discarded
1	1999	2	3.73159	2E+09	426628	5407693	DC	Discarded
1	2000	14	3.4378	2E+09	426928	5414193	DC	Discarded
2	1996	28	3.3006	2E+09	428730	5414423	DC	Discarded
2	1997	11	3.46036	2E+09	427330	5414423	DC	Discarded
2	1998	86	2.93891	2E+09	427530	5414223	DC	Discarded
2	1999	3	3.71649	2E+09	426683	5407696	DC	Discarded
2	2000	18	3.38298	2E+09	426930	5414223	DC	Discarded
3	1996	38	3.25818	2E+09	428809	5413327	DC	
3	1997	36	3.26129	2E+09	427128	5414193	DC	
3	1999	4	3.69671	2E+09	426584	5407696	DC	Discarded
3	2000	22	3.35172	2E+09	427930	5414423	DC	
4	1996	46	3.19267	2E+09	428730	5414223	DC	
4	1997	43	3.2094	2E+09	427130	5414223	DC	
4	1999	5	3.61566	2E+09	426683	5407600	DC	Discarded
4	2000	26	3.31078	2E+09	426728	5414193	DC	
5	1996	58	3.0892	2E+09	428530	5414223	DC	
5	1997	54	3.10876	2E+09	427530	5414623	DC	
5	1999	6	3.60317	2E+09	426584	5407600	DC	Discarded
5	2000	30	3.29725	2E+09	427930	5414223	DC	
6	1997	57	3.09206	2E+09	427330	5414623	DC	
6	1999	7	3.55036	2E+09	428808	5412548	DC	Highest
6	2000	33	3.27953	2E+09	427128	5414193	DC	
7	1997	60	3.08032	2E+09	427530	5414823	DC	
7	1999	8	3.54207	2E+09	426683	5407504	DC	
7	2000	35	3.26966	2E+09	426730	5414223	DC	
8	1997	62	3.07718	2E+09	427330	5414223	DC	
8	1999	9	3.49265	2E+09	426584	5407504	DC	
8	2000	37	3.25838	2E+09	427730	5414223	DC	
9	1997	65	3.06432	2E+09	427530	5414423	DC	
9	1999	10	3.49169	2E+09	426683	5407408	DC	
9	2000	41	3.23185	2E+09	427130	5414223	DC	
10	1997	74	2.98047	2E+09	427330	5414423	DC	
10	1999	12	3.44946	2E+09	426485	5407696	DC	
10	2000	44	3.20087	2E+09	425928	5414193	DC	
11	1997	87	2.93367	2E+09	427530	5415023	DC	
11	1999	13	3.43924	2E+09	426683	5407312	DC	
11	2000	49	3.15228	2E+09	425930	5414223	DC	
12	1997	88	2.93255	2E+09	427128	5414393	DC	
12	1999	15	3.42951	2E+09	426781	5407696	DC	
12	2000	50	3.1472	2E+09	426928	5414393	DC	
13	1997	100	2.89726	2E+09	425530	5414223	DC	
13	1999	17	3.40928	2E+09	426584	5407408	DC	
13	2000	52	3.11496	2E+09	427330	5414223	DC	

14	1999	19	3.37012	2E+09	426485	5407600	DC
14	2000	53	3.10965	2E+09	426930	5414423	DC
15	1999	20	3.36051	2E+09	426781	5407600	DC
15	2000	63	3.07409	2E+09	427930	5414623	DC
16	1999	21	3.35517	2E+09	426683	5407216	DC
16	2000	67	3.03449	2E+09	428130	5414623	DC
17	1999	23	3.34936	2E+09	426584	5407312	DC
17	2000	68	3.02822	2E+09	428128	5414693	DC
18	1999	24	3.3263	2E+09	426628	5407193	DC
18	2000	69	3.0215	2E+09	426728	5414393	DC
19	1999	25	3.31696	2E+09	426781	5407504	DC
19	2000	76	2.97245	2E+09	425928	5414393	DC
20	1999	27	3.30529	2E+09	428930	5412623	DC
20	2000	77	2.972	2E+09	426730	5414423	DC
21	1999	29	3.29749	2E+09	426781	5407408	DC
21	2000	79	2.96056	2E+09	427128	5414393	DC
22	1999	31	3.28653	2E+09	426683	5407119	DC
22	2000	80	2.95938	2E+09	427628	5414193	DC
23	1999	32	3.28478	2E+09	426781	5407312	DC
23	2000	83	2.94468	2E+09	427128	5414193	DC
24	1999	34	3.27534	2E+09	426584	5407216	DC
24	2000	90	2.92422	2E+09	425930	5414423	DC
25	1999	39	3.25156	2E+09	426485	5407504	DC
25	2000	91	2.9226	2E+09	428130	5414823	DC
26	1999	40	3.24236	2E+09	426781	5407216	DC
26	2000	92	2.91898	2E+09	427130	5414423	DC
27	1999	42	3.21714	2E+09	426683	5407023	DC
27	2000	93	2.91758	2E+09	427330	5414423	DC
28	1999	45	3.19634	2E+09	426584	5407119	DC
28	2000	97	2.9018	2E+09	427130	5414223	DC
29	1999	47	3.19258	2E+09	426781	5407119	DC
29	2000	98	2.90151	2E+09	426928	5414593	DC
30	1999	48	3.15713	2E+09	426128	5414193	DC
31	1999	51	3.13609	2E+09	426584	5407023	DC
32	1999	55	3.10544	2E+09	426781	5407023	DC
33	1999	56	3.10262	2E+09	426485	5407408	DC
34	1999	59	3.08579	2E+09	426130	5414223	DC
35	1999	61	3.07919	2E+09	429128	5412693	DC
36	1999	64	3.07168	2E+09	425928	5414193	DC
37	1999	66	3.06205	2E+09	425930	5414223	DC
38	1999	70	3.01913	2E+09	426880	5407696	DC
39	1999	71	3.0142	2E+09	426730	5406823	DC
40	1999	72	2.99924	2E+09	426485	5407312	DC
41	1999	75	2.97521	2E+09	426485	5407216	DC
42	1999	78	2.96336	2E+09	426880	5407312	DC
43	1999	81	2.94849	2E+09	428930	5413223	DC
44	1999	82	2.94615	2E+09	426880	5407600	DC
45	1999	84	2.94399	2E+09	429130	5412623	DC
46	1999	85	2.94299	2E+09	426880	5407216	DC

*** THE MAXIMUM 100 24-HR AVERAGE CONCENTRATION VALUES FOR SOURCE GROUP: LEACH2 ***

RANK BY	YEAR	RANK	CONC	YYYYMM	XR	YR	TYPE	Ontario Reg. 419/05
1	1996	16	3.40991	2E+09	428628	5414193	DC	Discarded
1	1997	1	3.83192	2E+09	427330	5414223	DC	Discarded
1	1998	71	2.99878	2E+09	427628	5414193	DC	Discarded
1	1999	2	3.70751	2E+09	426628	5407693	DC	Discarded
1	2000	12	3.45032	2E+09	426928	5414193	DC	Discarded
2	1996	29	3.3059	2E+09	428730	5414423	DC	Discarded
2	1997	9	3.49516	2E+09	427330	5414423	DC	Discarded
2	1998	80	2.96225	2E+09	427530	5414223	DC	Discarded
2	1999	3	3.69926	2E+09	426683	5407696	DC	Discarded
2	2000	17	3.39679	2E+09	426930	5414223	DC	Discarded
3	1996	46	3.17474	2E+09	428809	5413327	DC	
3	1997	32	3.28729	2E+09	427128	5414193	DC	
3	1998	99	2.89547	2E+09	425530	5414223	DC	
3	1999	4	3.67997	2E+09	426584	5407696	DC	Discarded
3	2000	20	3.36269	2E+09	427930	5414423	DC	
4	1996	50	3.16033	2E+09	428730	5414223	DC	
4	1997	39	3.23636	2E+09	427130	5414223	DC	
4	1999	5	3.62309	2E+09	428808	5412548	DC	Highest
4	2000	24	3.3309	2E+09	426728	5414193	DC	
5	1996	52	3.12467	2E+09	428530	5414223	DC	
5	1997	54	3.12332	2E+09	427330	5414623	DC	
5	1999	6	3.60611	2E+09	426683	5407600	DC	
5	2000	27	3.3141	2E+09	427128	5414193	DC	
6	1997	57	3.10805	2E+09	427530	5414623	DC	
6	1999	7	3.58661	2E+09	426584	5407600	DC	
6	2000	31	3.28925	2E+09	426730	5414223	DC	
7	1997	62	3.07713	2E+09	427530	5414823	DC	
7	1999	8	3.52708	2E+09	426683	5407504	DC	
7	2000	33	3.28688	2E+09	427730	5414223	DC	
8	1997	63	3.07601	2E+09	427330	5414223	DC	
8	1999	10	3.4728	2E+09	426584	5407504	DC	
8	2000	34	3.2815	2E+09	427930	5414223	DC	
9	1997	66	3.05076	2E+09	427530	5414423	DC	
9	1999	11	3.46973	2E+09	426683	5407408	DC	
9	2000	35	3.26625	2E+09	427130	5414223	DC	
10	1997	78	2.97793	2E+09	427330	5414423	DC	
10	1999	13	3.4243	2E+09	426781	5407696	DC	
10	2000	41	3.22376	2E+09	425928	5414193	DC	
11	1997	82	2.95659	2E+09	427128	5414393	DC	
11	1999	14	3.42075	2E+09	426485	5407696	DC	
11	2000	44	3.17907	2E+09	425930	5414223	DC	
12	1997	89	2.94475	2E+09	427530	5415023	DC	
12	1999	15	3.41407	2E+09	426683	5407312	DC	
12	2000	49	3.16197	2E+09	426928	5414393	DC	
13	1997	95	2.91406	2E+09	427130	5414423	DC	
13	1999	18	3.38667	2E+09	426584	5407408	DC	

13	2000	51	3.13253	2E+09	427330	5414223	DC
14	1997	97	2.90875	2E+09	425530	5414223	DC
14	1999	19	3.36276	2E+09	428930	5412623	DC
14	2000	53	3.12434	2E+09	426930	5414423	DC
15	1999	21	3.35731	2E+09	426781	5407600	DC
15	2000	60	3.08439	2E+09	427930	5414623	DC
16	1999	22	3.34117	2E+09	426485	5407600	DC
16	2000	67	3.03653	2E+09	426728	5414393	DC
17	1999	23	3.33186	2E+09	426683	5407216	DC
17	2000	68	3.03176	2E+09	428128	5414693	DC
18	1999	25	3.32497	2E+09	426584	5407312	DC
18	2000	69	3.02709	2E+09	428130	5414623	DC
19	1999	26	3.32219	2E+09	426781	5407504	DC
19	2000	72	2.99531	2E+09	425928	5414393	DC
20	1999	28	3.30608	2E+09	426628	5407193	DC
20	2000	74	2.99115	2E+09	427128	5414393	DC
21	1999	30	3.29129	2E+09	426781	5407408	DC
21	2000	75	2.98971	2E+09	426730	5414423	DC
22	1999	36	3.26004	2E+09	426781	5407312	DC
22	2000	76	2.98815	2E+09	427628	5414193	DC
23	1999	37	3.25932	2E+09	426683	5407119	DC
23	2000	79	2.96905	2E+09	427128	5414193	DC
24	1999	38	3.25285	2E+09	426584	5407216	DC
24	2000	83	2.95452	2E+09	425930	5414423	DC
25	1999	40	3.22416	2E+09	426485	5407504	DC
25	2000	85	2.95232	2E+09	428130	5414823	DC
26	1999	42	3.21881	2E+09	426781	5407216	DC
26	2000	86	2.94818	2E+09	427130	5414423	DC
27	1999	43	3.20017	2E+09	426683	5407023	DC
27	2000	88	2.94621	2E+09	427330	5414423	DC
28	1999	45	3.17591	2E+09	426781	5407119	DC
28	2000	92	2.92735	2E+09	427130	5414223	DC
29	1999	47	3.16969	2E+09	426128	5414193	DC
29	2000	96	2.91389	2E+09	426928	5414593	DC
30	1999	48	3.16574	2E+09	426584	5407119	DC
31	1999	55	3.11758	2E+09	426130	5414223	DC
32	1999	56	3.11327	2E+09	426584	5407023	DC
33	1999	58	3.09911	2E+09	426781	5407023	DC
34	1999	59	3.09635	2E+09	425928	5414193	DC
35	1999	61	3.07853	2E+09	426485	5407408	DC
36	1999	64	3.06671	2E+09	425930	5414223	DC
37	1999	65	3.06231	2E+09	429128	5412693	DC
38	1999	70	3.0071	2E+09	426880	5407696	DC
39	1999	73	2.99519	2E+09	426730	5406823	DC
40	1999	77	2.9789	2E+09	426485	5407312	DC
41	1999	81	2.96139	2E+09	428930	5413223	DC
42	1999	84	2.95363	2E+09	426485	5407216	DC
43	1999	87	2.94697	2E+09	426880	5407312	DC
44	1999	90	2.94167	2E+09	426880	5407408	DC

*** THE MAXIMUM 100 24-HR AVERAGE CONCENTRATION VALUES FOR SOURCE GROUP: LEACH3 ***

RANK BY	YEAR	RANK	CONC	YYYYMM	XR	YR	TYPE	Ontario Reg. 419/05
1	1996	11	3.46196	2E+09	428628	5414193	DC	Discarded
1	1997	1	3.82193	2E+09	427330	5414223	DC	Discarded
1	1998	75	3.00918	2E+09	427628	5414193	DC	Discarded
1	1999	2	3.67762	2E+09	426683	5407696	DC	Discarded
1	2000	10	3.46994	2E+09	426928	5414193	DC	Discarded
2	1996	23	3.31367	2E+09	428730	5414423	DC	Discarded
2	1997	12	3.44861	2E+09	427330	5414423	DC	Discarded
2	1998	90	2.95228	2E+09	427530	5414223	DC	Discarded
2	1999	3	3.67037	2E+09	426628	5407693	DC	Discarded
2	2000	15	3.41887	2E+09	426930	5414223	DC	Discarded
3	1996	25	3.30605	2E+09	428809	5413327	DC	
3	1997	39	3.23947	2E+09	427128	5414193	DC	
3	1998	96	2.92012	2E+09	425530	5414223	DC	
3	1999	4	3.63196	2E+09	428808	5412548	DC	Highest
3	2000	20	3.351	2E+09	427930	5414223	DC	
4	1996	32	3.27119	2E+09	428730	5414223	DC	
4	1997	42	3.20602	2E+09	427530	5414623	DC	
4	1998	100	2.9062	2E+09	426328	5414193	DC	
4	1999	5	3.5898	2E+09	426584	5407696	DC	
4	2000	21	3.34747	2E+09	427930	5414423	DC	
5	1996	61	3.07466	2E+09	428530	5414223	DC	
5	1997	45	3.19142	2E+09	427130	5414223	DC	
5	1999	6	3.569	2E+09	426683	5407600	DC	
5	2000	26	3.29461	2E+09	426728	5414193	DC	
6	1997	46	3.18945	2E+09	427530	5414423	DC	
6	1999	7	3.4945	2E+09	426584	5407600	DC	
6	2000	30	3.28539	2E+09	427128	5414193	DC	
7	1997	52	3.16543	2E+09	427330	5414223	DC	
7	1999	8	3.48149	2E+09	426683	5407504	DC	
7	2000	35	3.25593	2E+09	426730	5414223	DC	
8	1997	56	3.11614	2E+09	427530	5414823	DC	
8	1999	9	3.47266	2E+09	426781	5407696	DC	
8	2000	36	3.24234	2E+09	427730	5414223	DC	
9	1997	69	3.03404	2E+09	427530	5414223	DC	
9	1999	13	3.44229	2E+09	426683	5407408	DC	
9	2000	37	3.241	2E+09	427130	5414223	DC	
10	1997	71	3.02966	2E+09	427330	5414623	DC	
10	1999	14	3.41987	2E+09	426683	5407312	DC	
10	2000	44	3.19818	2E+09	425928	5414193	DC	
11	1997	73	3.01721	2E+09	427330	5414423	DC	
11	1999	16	3.39282	2E+09	426584	5407504	DC	
11	2000	47	3.18664	2E+09	427330	5414223	DC	
12	1997	91	2.94339	2E+09	427530	5415023	DC	
12	1999	17	3.38468	2E+09	426781	5407600	DC	
12	2000	49	3.18344	2E+09	426928	5414393	DC	
13	1997	99	2.90762	2E+09	425530	5414223	DC	

13	1999	18	3.37764	2E+09	428930	5412623	DC
13	2000	51	3.16663	2E+09	425930	5414223	DC
14	1999	19	3.35289	2E+09	426683	5407216	DC
14	2000	53	3.14952	2E+09	426930	5414423	DC
15	1999	22	3.32352	2E+09	426584	5407408	DC
15	2000	62	3.05486	2E+09	428130	5414623	DC
16	1999	24	3.30647	2E+09	426781	5407504	DC
16	2000	63	3.0527	2E+09	428128	5414693	DC
17	1999	27	3.29179	2E+09	426781	5407312	DC
17	2000	65	3.04711	2E+09	427930	5414623	DC
18	1999	28	3.29037	2E+09	426781	5407216	DC
18	2000	72	3.02053	2E+09	427128	5414193	DC
19	1999	29	3.28858	2E+09	426485	5407696	DC
19	2000	74	3.01194	2E+09	426728	5414393	DC
20	1999	31	3.27429	2E+09	426584	5407312	DC
20	2000	77	2.99799	2E+09	425928	5414393	DC
21	1999	33	3.26873	2E+09	426781	5407408	DC
21	2000	80	2.98367	2E+09	427130	5414223	DC
22	1999	34	3.26331	2E+09	426683	5407119	DC
22	2000	83	2.97233	2E+09	425930	5414423	DC
23	1999	38	3.24036	2E+09	426628	5407193	DC
23	2000	86	2.96721	2E+09	427128	5414393	DC
24	1999	40	3.2189	2E+09	426485	5407600	DC
24	2000	87	2.96154	2E+09	426730	5414423	DC
25	1999	41	3.20644	2E+09	426584	5407216	DC
25	2000	88	2.9595	2E+09	428130	5414823	DC
26	1999	43	3.20217	2E+09	426781	5407119	DC
26	2000	89	2.95538	2E+09	427330	5414423	DC
27	1999	48	3.1848	2E+09	426128	5414193	DC
27	2000	93	2.92662	2E+09	426928	5414593	DC
28	1999	50	3.16676	2E+09	426683	5407023	DC
28	2000	94	2.92298	2E+09	428130	5414423	DC
29	1999	54	3.14524	2E+09	426130	5414223	DC
29	2000	95	2.9223	2E+09	427130	5414423	DC
30	1999	55	3.12982	2E+09	426584	5407119	DC
30	2000	97	2.91588	2E+09	427628	5414193	DC
31	1999	57	3.11129	2E+09	429128	5412693	DC
32	1999	58	3.11047	2E+09	426485	5407504	DC
33	1999	59	3.0969	2E+09	426880	5407696	DC
34	1999	60	3.09394	2E+09	426781	5407023	DC
35	1999	64	3.04904	2E+09	426584	5407023	DC
36	1999	66	3.03965	2E+09	425928	5414193	DC
37	1999	67	3.03669	2E+09	426880	5407600	DC
38	1999	68	3.03612	2E+09	425930	5414223	DC
39	1999	70	3.03216	2E+09	426880	5407216	DC
40	1999	76	2.99964	2E+09	426730	5406823	DC
41	1999	78	2.99137	2E+09	426880	5407312	DC
42	1999	79	2.98892	2E+09	428930	5413223	DC
43	1999	81	2.97634	2E+09	426880	5407504	DC

*** THE MAXIMUM 100 24-HR AVERAGE CONCENTRATION VALUES FOR SOURCE GROUP: LEACH4 ***

RANK BY	YEAR	RANK	CONC	YYYYMM	XR	YR	TYPE	Ontario Reg. 419/05
1	1996	10	3.45802	2E+09	428628	5414193	DC	Discarded
1	1997	1	3.78932	2E+09	427330	5414223	DC	Discarded
1	1998	76	3.00666	2E+09	427628	5414193	DC	Discarded
1	1999	2	3.67827	2E+09	426683	5407696	DC	Discarded
1	2000	8	3.50116	2E+09	426928	5414193	DC	Discarded
2	1996	14	3.41364	2E+09	428809	5413327	DC	
2	1997	18	3.37461	2E+09	427330	5414423	DC	Discarded
2	1998	92	2.92572	2E+09	426328	5414193	DC	
2	1999	3	3.61775	2E+09	426628	5407693	DC	Discarded
2	2000	12	3.43473	2E+09	426930	5414223	DC	Discarded
3	1996	22	3.33051	2E+09	428730	5414223	DC	
3	1997	26	3.29607	2E+09	427530	5414423	DC	Discarded
3	1998	93	2.92398	2E+09	425530	5414223	DC	
3	1999	4	3.59612	2E+09	428808	5412548	DC	Highest
3	2000	17	3.37654	2E+09	427930	5414223	DC	
4	1996	27	3.28172	2E+09	428730	5414423	DC	
4	1997	30	3.27341	2E+09	427530	5414623	DC	Discarded
4	1998	97	2.92003	2E+09	427730	5414223	DC	
4	1999	5	3.57971	2E+09	426683	5407600	DC	
4	2000	20	3.34915	2E+09	427930	5414423	DC	
5	1996	82	2.9776	2E+09	428530	5414223	DC	
5	1997	34	3.22526	2E+09	427330	5414223	DC	
5	1999	6	3.53751	2E+09	426584	5407696	DC	
5	2000	31	3.24888	2E+09	426728	5414193	DC	
6	1997	44	3.18441	2E+09	427530	5414223	DC	
6	1999	7	3.53158	2E+09	426781	5407696	DC	
6	2000	32	3.24777	2E+09	427128	5414193	DC	
7	1997	49	3.15302	2E+09	427128	5414193	DC	
7	1999	9	3.47623	2E+09	426683	5407504	DC	
7	2000	38	3.21123	2E+09	426730	5414223	DC	
8	1997	53	3.13262	2E+09	427530	5414823	DC	
8	1999	11	3.45119	2E+09	426781	5407600	DC	
8	2000	39	3.2085	2E+09	427330	5414223	DC	
9	1997	60	3.10797	2E+09	427130	5414223	DC	
9	1999	13	3.42964	2E+09	426584	5407600	DC	
9	2000	41	3.19881	2E+09	427130	5414223	DC	
10	1997	65	3.04567	2E+09	427330	5414423	DC	
10	1999	15	3.40766	2E+09	426683	5407408	DC	
10	2000	42	3.1944	2E+09	426928	5414393	DC	
11	1997	91	2.92696	2E+09	427530	5415023	DC	
11	1999	16	3.37991	2E+09	426781	5407504	DC	
11	2000	47	3.15589	2E+09	427730	5414223	DC	
12	1997	96	2.9202	2E+09	427330	5414623	DC	
12	1999	19	3.36711	2E+09	426683	5407312	DC	
12	2000	48	3.15532	2E+09	426930	5414423	DC	
13	1999	21	3.34697	2E+09	428930	5412623	DC	

13	2000	54	3.13096	2E+09	425928	5414193	DC
14	1999	23	3.31297	2E+09	426584	5407504	DC
14	2000	57	3.12049	2E+09	428130	5414623	DC
15	1999	24	3.30408	2E+09	426683	5407216	DC
15	2000	59	3.11607	2E+09	425930	5414223	DC
16	1999	25	3.29871	2E+09	426781	5407408	DC
16	2000	62	3.08179	2E+09	428128	5414693	DC
17	1999	28	3.27395	2E+09	426781	5407312	DC
17	2000	63	3.0755	2E+09	427128	5414193	DC
18	1999	29	3.27379	2E+09	426781	5407216	DC
18	2000	70	3.03618	2E+09	427130	5414223	DC
19	1999	33	3.23519	2E+09	426584	5407408	DC
19	2000	72	3.01896	2E+09	427930	5414623	DC
20	1999	35	3.22251	2E+09	426628	5407193	DC
20	2000	77	3.00371	2E+09	428130	5414423	DC
21	1999	36	3.2196	2E+09	426683	5407119	DC
21	2000	81	2.98086	2E+09	425928	5414393	DC
22	1999	37	3.21272	2E+09	426128	5414193	DC
22	2000	84	2.96758	2E+09	426728	5414393	DC
23	1999	40	3.20091	2E+09	426781	5407119	DC
23	2000	86	2.96444	2E+09	427330	5414423	DC
24	1999	43	3.18547	2E+09	426584	5407312	DC
24	2000	87	2.96279	2E+09	428130	5414823	DC
25	1999	45	3.1699	2E+09	426683	5407023	DC
25	2000	88	2.95664	2E+09	425930	5414423	DC
26	1999	46	3.16375	2E+09	426130	5414223	DC
26	2000	94	2.92322	2E+09	426928	5414593	DC
27	1999	50	3.15126	2E+09	426880	5407696	DC
27	2000	95	2.92292	2E+09	426730	5414423	DC
28	1999	51	3.14678	2E+09	426781	5407023	DC
28	2000	99	2.9169	2E+09	427128	5414393	DC
29	1999	52	3.14067	2E+09	429128	5412693	DC
30	1999	55	3.12861	2E+09	426485	5407696	DC
31	1999	56	3.12241	2E+09	426584	5407216	DC
32	1999	58	3.11618	2E+09	426880	5407600	DC
33	1999	61	3.09893	2E+09	426880	5407504	DC
34	1999	64	3.06582	2E+09	426485	5407600	DC
35	1999	66	3.04375	2E+09	426880	5407408	DC
36	1999	67	3.04302	2E+09	426880	5407216	DC
37	1999	68	3.04237	2E+09	426584	5407119	DC
38	1999	69	3.03717	2E+09	426880	5407119	DC
39	1999	71	3.0326	2E+09	429130	5412623	DC
40	1999	73	3.01528	2E+09	426917	5407750	DC
41	1999	74	3.01237	2E+09	426880	5407312	DC
42	1999	75	3.00758	2E+09	426730	5406823	DC
43	1999	78	2.99989	2E+09	428930	5413223	DC
44	1999	79	2.99021	2E+09	425930	5414223	DC
45	1999	80	2.98688	2E+09	426584	5407023	DC
46	1999	83	2.96908	2E+09	426485	5407504	DC

*** THE MAXIMUM 100 24-HR AVERAGE CONCENTRATION VALUES FOR SOURCE GROUP: LEACH5 ***

RANK BY	YEAR	RANK	CONC	YYYYMM	XR	YR	TYPE	Ontario Reg. 419/05
1	1996	12	3.46107	2E+09	428809	5413327	DC	Discarded
1	1997	1	3.75984	2E+09	427330	5414223	DC	Discarded
1	1998	80	2.97771	2E+09	427628	5414193	DC	Discarded
1	1999	2	3.7008	2E+09	426683	5407696	DC	Discarded
1	2000	10	3.47204	2E+09	426928	5414193	DC	Discarded
2	1996	14	3.42261	2E+09	428628	5414193	DC	
2	1997	21	3.33857	2E+09	427330	5414423	DC	Discarded
2	1998	92	2.90997	2E+09	425530	5414223	DC	
2	1999	3	3.64178	2E+09	426628	5407693	DC	Discarded
2	2000	15	3.40663	2E+09	426930	5414223	DC	Discarded
3	1996	20	3.34736	2E+09	428730	5414223	DC	
3	1997	26	3.28602	2E+09	427530	5414423	DC	Discarded
3	1998	94	2.90551	2E+09	427730	5414223	DC	
3	1999	4	3.60996	2E+09	426683	5407600	DC	Discarded
3	2000	18	3.35715	2E+09	427930	5414223	DC	
4	1996	34	3.22724	2E+09	428730	5414423	DC	
4	1997	31	3.24795	2E+09	427530	5414623	DC	Discarded
4	1998	97	2.8951	2E+09	426328	5414193	DC	
4	1999	5	3.58393	2E+09	426584	5407696	DC	Discarded
4	2000	24	3.31044	2E+09	427930	5414423	DC	
5	1996	90	2.9153	2E+09	428530	5414223	DC	
5	1997	38	3.21103	2E+09	427330	5414223	DC	
5	1999	6	3.54599	2E+09	426781	5407696	DC	Discarded
5	2000	33	3.23536	2E+09	426728	5414193	DC	
6	1997	42	3.18904	2E+09	427530	5414223	DC	
6	1999	7	3.5167	2E+09	426683	5407504	DC	Discarded
6	2000	37	3.21571	2E+09	427128	5414193	DC	
7	1997	51	3.12922	2E+09	427128	5414193	DC	
7	1999	8	3.47908	2E+09	428808	5412548	DC	Highest
7	2000	41	3.19534	2E+09	426730	5414223	DC	
8	1997	57	3.10866	2E+09	427530	5414823	DC	
8	1999	9	3.47528	2E+09	426584	5407600	DC	
8	2000	43	3.17826	2E+09	427330	5414223	DC	
9	1997	63	3.0817	2E+09	427130	5414223	DC	
9	1999	11	3.47078	2E+09	426781	5407600	DC	
9	2000	44	3.1697	2E+09	426928	5414393	DC	
10	1997	70	3.03577	2E+09	427330	5414423	DC	
10	1999	13	3.44467	2E+09	426683	5407408	DC	
10	2000	45	3.16804	2E+09	427130	5414223	DC	
11	1997	93	2.90664	2E+09	427530	5415023	DC	
11	1999	16	3.4054	2E+09	426781	5407504	DC	
11	2000	50	3.13064	2E+09	426930	5414423	DC	
12	1997	98	2.8929	2E+09	427330	5414623	DC	
12	1999	17	3.3916	2E+09	426683	5407312	DC	
12	2000	53	3.12694	2E+09	425928	5414193	DC	
13	1997	100	2.89039	2E+09	427628	5414693	DC	

13	1999	19	3.35416	2E+09	426584	5407504	DC
13	2000	54	3.12059	2E+09	427730	5414223	DC
14	1999	22	3.33602	2E+09	426781	5407408	DC
14	2000	56	3.11124	2E+09	425930	5414223	DC
15	1999	23	3.32373	2E+09	426683	5407216	DC
15	2000	61	3.09161	2E+09	428130	5414623	DC
16	1999	25	3.29909	2E+09	426781	5407312	DC
16	2000	66	3.06941	2E+09	428128	5414693	DC
17	1999	27	3.28108	2E+09	426781	5407216	DC
17	2000	67	3.05087	2E+09	427128	5414193	DC
18	1999	28	3.26969	2E+09	426584	5407408	DC
18	2000	75	3.012	2E+09	428130	5414423	DC
19	1999	29	3.25236	2E+09	426628	5407193	DC
19	2000	76	3.01192	2E+09	427130	5414223	DC
20	1999	30	3.25004	2E+09	428930	5412623	DC
20	2000	82	2.97391	2E+09	427930	5414623	DC
21	1999	32	3.24232	2E+09	426683	5407119	DC
21	2000	83	2.96492	2E+09	425928	5414393	DC
22	1999	35	3.21922	2E+09	426781	5407119	DC
22	2000	84	2.95444	2E+09	426728	5414393	DC
23	1999	36	3.21794	2E+09	426584	5407312	DC
23	2000	85	2.94462	2E+09	428130	5414823	DC
24	1999	39	3.20842	2E+09	426128	5414193	DC
24	2000	87	2.93933	2E+09	427330	5414423	DC
25	1999	40	3.19735	2E+09	426683	5407023	DC
25	2000	88	2.93799	2E+09	425930	5414423	DC
26	1999	46	3.16754	2E+09	426781	5407023	DC
26	2000	91	2.9141	2E+09	426730	5414423	DC
27	1999	47	3.16128	2E+09	426485	5407696	DC
27	2000	96	2.90265	2E+09	426928	5414593	DC
28	1999	48	3.15172	2E+09	426584	5407216	DC
28	2000	99	2.89063	2E+09	427128	5414393	DC
29	1999	49	3.14302	2E+09	426880	5407696	DC
30	1999	52	3.12762	2E+09	426130	5414223	DC
31	1999	55	3.11161	2E+09	429128	5412693	DC
32	1999	58	3.10314	2E+09	426880	5407600	DC
33	1999	59	3.10242	2E+09	426880	5407504	DC
34	1999	60	3.09985	2E+09	426485	5407600	DC
35	1999	62	3.08379	2E+09	429130	5412623	DC
36	1999	64	3.07513	2E+09	426880	5407408	DC
37	1999	65	3.07004	2E+09	426584	5407119	DC
38	1999	68	3.04074	2E+09	426880	5407216	DC
39	1999	69	3.03863	2E+09	426880	5407312	DC
40	1999	71	3.03417	2E+09	426917	5407750	DC
41	1999	72	3.03372	2E+09	426730	5406823	DC
42	1999	73	3.02998	2E+09	426880	5407119	DC
43	1999	74	3.02124	2E+09	426584	5407023	DC
44	1999	77	3.00259	2E+09	426485	5407504	DC
45	1999	78	2.99716	2E+09	425928	5414193	DC

*** THE MAXIMUM 100 24-HR AVERAGE CONCENTRATION VALUES FOR SOURCE GROUP: LEACH6 ***

RANK BY	YEAR	RANK	CONC	YYYYMM	XR	YR	TYPE	Ontario Reg. 419/05
1	1996	12	3.44941	2E+09	428628	5414193	DC	Discarded
1	1997	1	3.84756	2E+09	427330	5414223	DC	Discarded
1	1998	67	3.04448	2E+09	427628	5414193	DC	Discarded
1	1999	2	3.69258	2E+09	428808	5412548	DC	Discarded
1	2000	9	3.47709	2E+09	426928	5414193	DC	Discarded
2	1996	22	3.3342	2E+09	428730	5414423	DC	Discarded
2	1997	7	3.48677	2E+09	427330	5414423	DC	Discarded
2	1998	80	2.9912	2E+09	427530	5414223	DC	Discarded
2	1999	3	3.66162	2E+09	426683	5407696	DC	Highest
2	2000	14	3.42478	2E+09	426930	5414223	DC	Discarded
3	1996	40	3.21949	2E+09	428730	5414223	DC	Discarded
3	1997	33	3.26377	2E+09	427128	5414193	DC	
3	1998	87	2.96415	2E+09	425530	5414223	DC	
3	1999	4	3.65524	2E+09	426628	5407693	DC	
3	2000	17	3.38124	2E+09	427930	5414423	DC	
4	1996	41	3.2189	2E+09	428809	5413327	DC	
4	1997	38	3.22421	2E+09	427130	5414223	DC	
4	1998	97	2.92399	2E+09	428808	5412548	DC	
4	1999	5	3.57505	2E+09	426584	5407696	DC	
4	2000	20	3.35912	2E+09	427930	5414223	DC	
5	1996	55	3.14088	2E+09	428530	5414223	DC	
5	1997	39	3.22083	2E+09	427530	5414623	DC	
5	1998	98	2.92344	2E+09	426328	5414193	DC	
5	1999	6	3.55342	2E+09	426683	5407600	DC	
5	2000	23	3.32006	2E+09	426728	5414193	DC	
6	1997	51	3.16217	2E+09	427530	5414423	DC	
6	1999	8	3.48156	2E+09	426584	5407600	DC	
6	2000	24	3.31995	2E+09	427128	5414193	DC	
7	1997	52	3.15978	2E+09	427330	5414223	DC	
7	1999	10	3.4696	2E+09	426683	5407504	DC	
7	2000	27	3.28488	2E+09	427730	5414223	DC	
8	1997	56	3.13599	2E+09	427530	5414823	DC	
8	1999	11	3.4613	2E+09	426781	5407696	DC	
8	2000	29	3.27903	2E+09	426730	5414223	DC	
9	1997	66	3.06463	2E+09	427330	5414623	DC	
9	1999	13	3.43099	2E+09	426683	5407408	DC	
9	2000	32	3.27244	2E+09	427130	5414223	DC	
10	1997	75	3.0112	2E+09	427330	5414423	DC	
10	1999	15	3.42135	2E+09	428930	5412623	DC	
10	2000	42	3.20915	2E+09	427330	5414223	DC	
11	1997	79	2.99583	2E+09	427530	5414223	DC	
11	1999	16	3.40505	2E+09	426683	5407312	DC	
11	2000	44	3.2042	2E+09	425928	5414193	DC	
12	1997	86	2.96587	2E+09	427530	5415023	DC	
12	1999	18	3.38054	2E+09	426584	5407504	DC	
12	2000	46	3.19348	2E+09	426928	5414393	DC	

13	1997	100	2.90773	2E+09	425530	5414223	DC
13	1999	19	3.36962	2E+09	426781	5407600	DC
13	2000	48	3.19006	2E+09	425930	5414223	DC
14	1999	21	3.33546	2E+09	426683	5407216	DC
14	2000	53	3.1595	2E+09	426930	5414423	DC
15	1999	25	3.31028	2E+09	426584	5407408	DC
15	2000	58	3.10859	2E+09	427930	5414623	DC
16	1999	26	3.29492	2E+09	426781	5407504	DC
16	2000	62	3.07951	2E+09	428130	5414623	DC
17	1999	28	3.28403	2E+09	426781	5407312	DC
17	2000	64	3.06768	2E+09	428128	5414693	DC
18	1999	30	3.27544	2E+09	426485	5407696	DC
18	2000	70	3.03111	2E+09	426728	5414393	DC
19	1999	31	3.27396	2E+09	426781	5407216	DC
19	2000	71	3.03098	2E+09	427128	5414193	DC
20	1999	34	3.26269	2E+09	426781	5407408	DC
20	2000	74	3.01179	2E+09	425928	5414393	DC
21	1999	35	3.25921	2E+09	426584	5407312	DC
21	2000	76	3.00555	2E+09	427130	5414223	DC
22	1999	36	3.25382	2E+09	426683	5407119	DC
22	2000	77	2.99703	2E+09	427128	5414393	DC
23	1999	37	3.22508	2E+09	426628	5407193	DC
23	2000	82	2.98888	2E+09	425930	5414423	DC
24	1999	43	3.20509	2E+09	426485	5407600	DC
24	2000	84	2.98457	2E+09	427628	5414193	DC
25	1999	45	3.19845	2E+09	426128	5414193	DC
25	2000	85	2.98328	2E+09	426730	5414423	DC
26	1999	47	3.19044	2E+09	426584	5407216	DC
26	2000	89	2.9629	2E+09	428130	5414823	DC
27	1999	49	3.18917	2E+09	426781	5407119	DC
27	2000	91	2.95643	2E+09	427330	5414423	DC
28	1999	50	3.16423	2E+09	426130	5414223	DC
28	2000	92	2.95478	2E+09	427130	5414423	DC
29	1999	54	3.15286	2E+09	426683	5407023	DC
29	2000	94	2.93753	2E+09	426928	5414593	DC
30	1999	57	3.12003	2E+09	426584	5407119	DC
30	2000	99	2.90943	2E+09	426930	5414623	DC
31	1999	59	3.09728	2E+09	426485	5407504	DC
32	1999	60	3.09255	2E+09	426880	5407696	DC
33	1999	61	3.08461	2E+09	429128	5412693	DC
34	1999	63	3.07434	2E+09	426781	5407023	DC
35	1999	65	3.06561	2E+09	425928	5414193	DC
36	1999	68	3.04022	2E+09	426584	5407023	DC
37	1999	69	3.03363	2E+09	425930	5414223	DC
38	1999	72	3.02724	2E+09	426880	5407600	DC
39	1999	73	3.01923	2E+09	426880	5407216	DC
40	1999	78	2.99626	2E+09	428930	5413223	DC
41	1999	81	2.9907	2E+09	426880	5407312	DC
42	1999	83	2.985	2E+09	426730	5406823	DC

*** THE MAXIMUM 100 24-HR AVERAGE CONCENTRATION VALUES FOR SOURCE GROUP: LEACH7 ***

RANK BY	YEAR	RANK	CONC	YYYYMM	XR	YR	TYPE	Ontario Reg. 419/05
1	1996	16	3.40175	2E+09	428628	5414193	DC	Discarded
1	1997	1	3.84702	2E+09	427330	5414223	DC	Discarded
1	1998	69	3.02678	2E+09	427628	5414193	DC	Discarded
1	1999	2	3.68713	2E+09	426628	5407693	DC	Discarded
1	2000	11	3.45281	2E+09	426928	5414193	DC	Discarded
2	1996	24	3.33237	2E+09	428730	5414423	DC	Discarded
2	1997	8	3.53613	2E+09	427330	5414423	DC	Discarded
2	1998	74	3.00961	2E+09	427530	5414223	DC	Discarded
2	1999	3	3.68103	2E+09	426683	5407696	DC	Discarded
2	2000	15	3.40431	2E+09	426930	5414223	DC	Discarded
3	1996	45	3.18106	2E+09	428530	5414223	DC	Discarded
3	1997	27	3.31537	2E+09	427128	5414193	DC	
3	1998	99	2.90816	2E+09	425530	5414223	DC	
3	1999	4	3.66459	2E+09	428808	5412548	DC	Highest
3	2000	19	3.37007	2E+09	427930	5414423	DC	
4	1996	58	3.09132	2E+09	428809	5413327	DC	
4	1997	36	3.26789	2E+09	427130	5414223	DC	
4	1999	5	3.66372	2E+09	426584	5407696	DC	
4	2000	21	3.35465	2E+09	426728	5414193	DC	
5	1996	59	3.08857	2E+09	428730	5414223	DC	
5	1997	49	3.15899	2E+09	427330	5414623	DC	
5	1999	6	3.59164	2E+09	426683	5407600	DC	
5	2000	22	3.34854	2E+09	427128	5414193	DC	
6	1997	54	3.12173	2E+09	427530	5414623	DC	
6	1999	7	3.56996	2E+09	426584	5407600	DC	
6	2000	25	3.3284	2E+09	427730	5414223	DC	
7	1997	60	3.08247	2E+09	427530	5414823	DC	
7	1999	9	3.51207	2E+09	426683	5407504	DC	
7	2000	30	3.31267	2E+09	426730	5414223	DC	
8	1997	63	3.06805	2E+09	427330	5414223	DC	
8	1999	10	3.45599	2E+09	426584	5407504	DC	
8	2000	32	3.30287	2E+09	427130	5414223	DC	
9	1997	68	3.02849	2E+09	427530	5414423	DC	
9	1999	12	3.45121	2E+09	426683	5407408	DC	
9	2000	34	3.28585	2E+09	427930	5414223	DC	
10	1997	79	2.97731	2E+09	427128	5414393	DC	
10	1999	13	3.4116	2E+09	426781	5407696	DC	
10	2000	38	3.23987	2E+09	425928	5414193	DC	
11	1997	84	2.9586	2E+09	427530	5415023	DC	
11	1999	14	3.40566	2E+09	426485	5407696	DC	
11	2000	42	3.20658	2E+09	425930	5414223	DC	
12	1997	85	2.95842	2E+09	427330	5414423	DC	
12	1999	17	3.39513	2E+09	428930	5412623	DC	
12	2000	47	3.1746	2E+09	426928	5414393	DC	
13	1997	89	2.94301	2E+09	427130	5414423	DC	
13	1999	18	3.39386	2E+09	426683	5407312	DC	

13	2000	48	3.16282	2E+09	427330	5414223	DC
14	1997	92	2.93655	2E+09	427128	5414193	DC
14	1999	20	3.36936	2E+09	426584	5407408	DC
14	2000	53	3.13749	2E+09	426930	5414423	DC
15	1997	100	2.90736	2E+09	425530	5414223	DC
15	1999	23	3.34607	2E+09	426781	5407600	DC
15	2000	55	3.11767	2E+09	427930	5414623	DC
16	1999	26	3.32578	2E+09	426485	5407600	DC
16	2000	65	3.06176	2E+09	426728	5414393	DC
17	1999	28	3.31412	2E+09	426781	5407504	DC
17	2000	66	3.05995	2E+09	427628	5414193	DC
18	1999	29	3.31395	2E+09	426683	5407216	DC
18	2000	70	3.02065	2E+09	427128	5414393	DC
19	1999	31	3.30737	2E+09	426584	5407312	DC
19	2000	71	3.01636	2E+09	428130	5414623	DC
20	1999	33	3.28736	2E+09	426628	5407193	DC
20	2000	72	3.0157	2E+09	425928	5414393	DC
21	1999	35	3.27682	2E+09	426781	5407408	DC
21	2000	73	3.01332	2E+09	426730	5414423	DC
22	1999	37	3.24042	2E+09	426781	5407312	DC
22	2000	75	3.00902	2E+09	428128	5414693	DC
23	1999	39	3.23718	2E+09	426683	5407119	DC
23	2000	77	2.97902	2E+09	425930	5414423	DC
24	1999	40	3.23583	2E+09	426584	5407216	DC
24	2000	78	2.97735	2E+09	427130	5414423	DC
25	1999	41	3.20957	2E+09	426485	5407504	DC
25	2000	81	2.96698	2E+09	428130	5414823	DC
26	1999	43	3.20229	2E+09	426781	5407216	DC
26	2000	83	2.96571	2E+09	427128	5414193	DC
27	1999	44	3.18624	2E+09	426128	5414193	DC
27	2000	87	2.95597	2E+09	427330	5414423	DC
28	1999	46	3.17764	2E+09	426683	5407023	DC
28	2000	88	2.94718	2E+09	427130	5414223	DC
29	1999	50	3.15418	2E+09	426781	5407119	DC
29	2000	94	2.92599	2E+09	426928	5414593	DC
30	1999	51	3.14903	2E+09	426584	5407119	DC
31	1999	52	3.14062	2E+09	426130	5414223	DC
32	1999	56	3.10638	2E+09	425928	5414193	DC
33	1999	57	3.09659	2E+09	426584	5407023	DC
34	1999	61	3.08138	2E+09	425930	5414223	DC
35	1999	62	3.07939	2E+09	426781	5407023	DC
36	1999	64	3.06573	2E+09	426485	5407408	DC
37	1999	67	3.02938	2E+09	429128	5412693	DC
38	1999	76	2.99506	2E+09	426880	5407696	DC
39	1999	80	2.9741	2E+09	426730	5406823	DC
40	1999	82	2.96685	2E+09	426485	5407312	DC
41	1999	86	2.95676	2E+09	428930	5413223	DC
42	1999	90	2.94034	2E+09	426485	5407216	DC
43	1999	91	2.93723	2E+09	426880	5407408	DC

*** THE MAXIMUM 100 24-HR AVERAGE CONCENTRATION VALUES FOR SOURCE GROUP: LEACH8 ***

RANK BY	YEAR	RANK	CONC	YYYYMM	XR	YR	TYPE	Ontario Reg. 419/05
1	1996	12	3.44369	2E+09	428628	5414193	DC	Discarded
1	1997	1	3.79717	2E+09	427330	5414223	DC	Discarded
1	1998	79	2.99126	2E+09	427628	5414193	DC	Discarded
1	1999	2	3.70616	2E+09	426683	5407696	DC	Discarded
1	2000	11	3.44694	2E+09	426928	5414193	DC	Discarded
2	1996	19	3.36794	2E+09	428809	5413327	DC	
2	1997	16	3.40397	2E+09	427330	5414423	DC	Discarded
2	1998	96	2.90329	2E+09	427530	5414223	DC	Discarded
2	1999	3	3.69766	2E+09	426628	5407693	DC	Discarded
2	2000	17	3.39822	2E+09	426930	5414223	DC	Discarded
3	1996	31	3.27871	2E+09	428730	5414223	DC	
3	1997	41	3.20417	2E+09	427128	5414193	DC	
3	1999	4	3.62037	2E+09	426584	5407696	DC	Discarded
3	2000	21	3.33907	2E+09	427930	5414223	DC	
4	1996	32	3.2691	2E+09	428730	5414423	DC	
4	1997	42	3.19407	2E+09	427530	5414423	DC	
4	1999	5	3.59707	2E+09	426683	5407600	DC	Discarded
4	2000	23	3.32737	2E+09	427930	5414423	DC	
5	1996	73	3.0122	2E+09	428530	5414223	DC	
5	1997	44	3.18665	2E+09	427530	5414623	DC	
5	1999	6	3.52852	2E+09	428808	5412548	DC	Highest
5	2000	33	3.26317	2E+09	426728	5414193	DC	
6	1997	51	3.15033	2E+09	427130	5414223	DC	
6	1999	7	3.5199	2E+09	426584	5407600	DC	
6	2000	35	3.25473	2E+09	427128	5414193	DC	
7	1997	52	3.15009	2E+09	427330	5414223	DC	
7	1999	8	3.50335	2E+09	426683	5407504	DC	
7	2000	38	3.22495	2E+09	426730	5414223	DC	
8	1997	59	3.10278	2E+09	427530	5414823	DC	
8	1999	9	3.49664	2E+09	426781	5407696	DC	
8	2000	40	3.21077	2E+09	427130	5414223	DC	
9	1997	64	3.05442	2E+09	427530	5414223	DC	
9	1999	10	3.46119	2E+09	426683	5407408	DC	
9	2000	43	3.18676	2E+09	427730	5414223	DC	
10	1997	70	3.02615	2E+09	427330	5414423	DC	
10	1999	13	3.43897	2E+09	426683	5407312	DC	
10	2000	46	3.18159	2E+09	425928	5414193	DC	
11	1997	80	2.98956	2E+09	427330	5414623	DC	
11	1999	14	3.4151	2E+09	426584	5407504	DC	
11	2000	48	3.16276	2E+09	426928	5414393	DC	
12	1997	92	2.92095	2E+09	427530	5415023	DC	
12	1999	15	3.41308	2E+09	426781	5407600	DC	
12	2000	49	3.16148	2E+09	427330	5414223	DC	
13	1999	18	3.37684	2E+09	426683	5407216	DC	
13	2000	53	3.14743	2E+09	425930	5414223	DC	
14	1999	20	3.34525	2E+09	426584	5407408	DC	

14	2000	55	3.12977	2E+09	426930	5414423	DC
15	1999	22	3.32865	2E+09	426781	5407504	DC
15	2000	62	3.06622	2E+09	428130	5414623	DC
16	1999	24	3.31213	2E+09	426485	5407696	DC
16	2000	66	3.03641	2E+09	428128	5414693	DC
17	1999	25	3.3115	2E+09	426781	5407216	DC
17	2000	72	3.01482	2E+09	427930	5414623	DC
18	1999	26	3.30294	2E+09	426781	5407312	DC
18	2000	76	2.99618	2E+09	427128	5414193	DC
19	1999	27	3.29829	2E+09	426584	5407312	DC
19	2000	81	2.98372	2E+09	426728	5414393	DC
20	1999	28	3.28903	2E+09	428930	5412623	DC
20	2000	82	2.98175	2E+09	425928	5414393	DC
21	1999	29	3.28197	2E+09	426683	5407119	DC
21	2000	84	2.95962	2E+09	427130	5414223	DC
22	1999	30	3.27993	2E+09	426781	5407408	DC
22	2000	85	2.95048	2E+09	425930	5414423	DC
23	1999	34	3.26281	2E+09	426628	5407193	DC
23	2000	87	2.94761	2E+09	428130	5414823	DC
24	1999	36	3.24231	2E+09	426485	5407600	DC
24	2000	88	2.94459	2E+09	427330	5414423	DC
25	1999	37	3.23036	2E+09	426584	5407216	DC
25	2000	89	2.93509	2E+09	427128	5414393	DC
26	1999	39	3.21721	2E+09	426781	5407119	DC
26	2000	90	2.9337	2E+09	426730	5414423	DC
27	1999	45	3.18582	2E+09	426683	5407023	DC
27	2000	91	2.92918	2E+09	428130	5414423	DC
28	1999	47	3.1755	2E+09	426128	5414193	DC
28	2000	94	2.9119	2E+09	426928	5414593	DC
29	1999	50	3.15124	2E+09	426584	5407119	DC
29	2000	99	2.88964	2E+09	427130	5414423	DC
30	1999	54	3.13308	2E+09	426485	5407504	DC
30	2000	100	2.88381	2E+09	426930	5414623	DC
31	1999	56	3.11517	2E+09	426781	5407023	DC
32	1999	57	3.11004	2E+09	426130	5414223	DC
33	1999	58	3.10571	2E+09	426880	5407696	DC
34	1999	60	3.098	2E+09	429128	5412693	DC
35	1999	61	3.06998	2E+09	426584	5407023	DC
36	1999	63	3.05673	2E+09	426880	5407600	DC
37	1999	65	3.04837	2E+09	426880	5407216	DC
38	1999	67	3.03395	2E+09	429130	5412623	DC
39	1999	68	3.03354	2E+09	425930	5414223	DC
40	1999	69	3.02659	2E+09	425928	5414193	DC
41	1999	71	3.01713	2E+09	426730	5406823	DC
42	1999	74	3.00263	2E+09	426880	5407504	DC
43	1999	75	2.99918	2E+09	426880	5407119	DC
44	1999	77	2.99308	2E+09	426485	5407408	DC
45	1999	78	2.9924	2E+09	426880	5407312	DC
46	1999	83	2.96619	2E+09	428930	5413223	DC

*** THE MAXIMUM 100 24-HR AVERAGE CONCENTRATION VALUES FOR SOURCE GROUP: LGO ***

RANK BY '	YEAR	RANK	CONC	YYYYMM	XR	YR	TYPE	Ontario Reg. 419/05
1	1996	6	3.12518	2E+09	426917	5407750	DC	Discarded
1	1997	25	2.51067	2E+09	429102	5408830	DC	Discarded
1	1998	8	2.99627	2E+09	426068	5407740	DC	Discarded
1	1999	3	3.35729	2E+09	427700	5407741	DC	Discarded
1	2000	1	3.51828	2E+09	426917	5407750	DC	Discarded
2	1996	9	2.9962	2E+09	429102	5408830	DC	
2	1997	37	2.3699	2E+09	427700	5407741	DC	
2	1998	21	2.58209	2E+09	427720	5407741	DC	
2	1999	4	3.20195	2E+09	427720	5407741	DC	Discarded
2	2000	2	3.48924	2E+09	429093	5408498	DC	Highest
3	1996	17	2.67572	2E+09	429093	5408498	DC	
3	1997	40	2.35122	2E+09	427720	5407741	DC	
3	1998	26	2.49019	2E+09	426068	5407740	DC	
3	1999	7	3.01516	2E+09	427718	5407601	DC	Discarded
3	2000	5	3.13674	2E+09	429093	5408498	DC	
4	1996	19	2.61178	2E+09	429425	5408830	DC	
4	1997	45	2.32135	2E+09	427720	5407741	DC	
4	1998	27	2.48332	2E+09	428564	5407591	DC	
4	1999	18	2.66292	2E+09	429093	5408498	DC	
4	2000	10	2.97307	2E+09	429272	5408532	DC	
5	1996	23	2.52113	2E+09	429272	5408732	DC	
5	1997	46	2.30849	2E+09	427720	5407741	DC	
5	1998	28	2.44572	2E+09	429102	5408830	DC	
5	1999	41	2.34815	2E+09	429102	5408830	DC	
5	2000	11	2.91508	2E+09	426917	5407750	DC	
6	1996	36	2.37786	2E+09	426068	5407740	DC	
6	1997	48	2.29895	2E+09	427700	5407741	DC	
6	1998	32	2.41655	2E+09	427700	5407741	DC	
6	1999	53	2.29042	2E+09	429422	5407591	DC	
6	2000	12	2.88732	2E+09	429102	5408830	DC	
7	1996	42	2.33895	2E+09	429425	5408830	DC	
7	1997	51	2.29741	2E+09	427700	5407741	DC	
7	1998	47	2.29964	2E+09	429102	5408830	DC	
7	1999	61	2.22358	2E+09	426068	5407740	DC	
7	2000	13	2.82564	2E+09	429093	5408498	DC	
8	1996	50	2.29756	2E+09	429102	5408830	DC	
8	1997	54	2.28186	2E+09	427720	5407741	DC	
8	1998	49	2.29783	2E+09	426917	5407750	DC	
8	1999	69	2.17919	2E+09	426068	5407740	DC	
8	2000	14	2.77644	2E+09	429102	5408830	DC	
9	1996	59	2.24452	2E+09	429102	5408830	DC	
9	1997	57	2.26284	2E+09	427700	5407741	DC	
9	1998	55	2.27573	2E+09	429102	5408830	DC	
9	1999	92	2.03349	2E+09	429272	5408732	DC	
9	2000	15	2.74633	2E+09	427720	5407741	DC	
10	1996	74	2.14037	2E+09	429425	5408830	DC	

10	1997	60	2.23316	2E+09	428564	5407591	DC
10	1998	58	2.25345	2E+09	429102	5408830	DC
10	2000	16	2.72411	2E+09	429272	5408532	DC
11	1996	95	2.02312	2E+09	429472	5408132	DC
11	1997	62	2.21541	2E+09	429102	5408830	DC
11	1998	64	2.1998	2E+09	426917	5407750	DC
11	2000	20	2.59999	2E+09	427700	5407741	DC
12	1996	99	2.00051	2E+09	429272	5408732	DC
12	1997	67	2.18481	2E+09	427718	5407601	DC
12	1998	65	2.19781	2E+09	424461	5407786	DC
12	2000	22	2.57742	2E+09	429272	5408532	DC
13	1997	70	2.17543	2E+09	426068	5407740	DC
13	1998	78	2.12708	2E+09	427718	5407601	DC
13	2000	24	2.51561	2E+09	429102	5408830	DC
14	1997	79	2.11863	2E+09	429272	5408732	DC
14	1998	85	2.05847	2E+09	429425	5408830	DC
14	2000	29	2.44466	2E+09	426917	5407750	DC
15	1997	80	2.0975	2E+09	427720	5407741	DC
15	1998	87	2.05422	2E+09	429272	5408732	DC
15	2000	30	2.44407	2E+09	429272	5408732	DC
16	1997	81	2.09512	2E+09	427718	5407601	DC
16	1998	98	2.00529	2E+09	429425	5408830	DC
16	2000	31	2.42388	2E+09	429472	5408332	DC
17	1997	84	2.06291	2E+09	427718	5407601	DC
17	2000	33	2.41415	2E+09	429272	5408732	DC
18	1997	86	2.05662	2E+09	429272	5408532	DC
18	2000	34	2.40819	2E+09	429414	5408504	DC
19	1997	88	2.05344	2E+09	427718	5407601	DC
19	2000	35	2.39649	2E+09	429431	5408490	DC
20	1997	89	2.05301	2E+09	429093	5408498	DC
20	2000	38	2.36576	2E+09	429425	5408830	DC
21	1997	90	2.04292	2E+09	427700	5407741	DC
21	2000	39	2.35683	2E+09	429414	5408504	DC
22	1997	91	2.03511	2E+09	429272	5408732	DC
22	2000	43	2.33315	2E+09	427718	5407601	DC
23	1997	93	2.03213	2E+09	429425	5408830	DC
23	2000	44	2.33214	2E+09	429431	5408490	DC
24	2000	52	2.29625	2E+09	426068	5407740	DC
25	2000	56	2.27201	2E+09	429472	5408332	DC
26	2000	63	2.20728	2E+09	429414	5408504	DC
27	2000	66	2.19772	2E+09	428808	5412548	DC
28	2000	68	2.17995	2E+09	429431	5408490	DC
29	2000	71	2.16303	2E+09	426917	5407750	DC
30	2000	72	2.15741	2E+09	429102	5408830	DC
31	2000	73	2.14591	2E+09	429272	5408732	DC
32	2000	75	2.13976	2E+09	429093	5408498	DC
33	2000	76	2.13971	2E+09	426917	5407750	DC
34	2000	77	2.13674	2E+09	429102	5408830	DC
35	2000	82	2.08533	2E+09	429425	5408830	DC

X	Y	Concentra	Elevation	Hill Heigh	Flagpole (	Averagin	Source Gr	Num Year	Net ID
429472	5408332	0.15367	380	380	0	ANNUAL	LGO	5	
429472	5408132	0.13723	376	376	0	ANNUAL	LGO	5	
429472	5407932	0.12244	370.75	370.75	0	ANNUAL	LGO	5	
429672	5408332	0.1394	377	377	0	ANNUAL	LGO	5	
429672	5408132	0.12615	373	373	0	ANNUAL	LGO	5	
429672	5407932	0.11298	367.86	367.86	0	ANNUAL	LGO	5	
429872	5408332	0.126	373.02	373.02	0	ANNUAL	LGO	5	
429872	5408132	0.1158	368.5	368.5	0	ANNUAL	LGO	5	
429872	5407932	0.10438	361.71	361.71	0	ANNUAL	LGO	5	
430072	5408332	0.11379	370.65	370.65	0	ANNUAL	LGO	5	
430072	5408132	0.10632	366.53	366.53	0	ANNUAL	LGO	5	
430072	5407932	0.09713	360.08	360.08	0	ANNUAL	LGO	5	
429272	5408732	0.20941	387	387	0	ANNUAL	LGO	5	
429272	5408532	0.19137	385	385	0	ANNUAL	LGO	5	
426272	5414932	0.04863	387	387	0	ANNUAL	LGO	5	
433272	5414932	0.01979	394	411	0	ANNUAL	LGO	5	
433272	5411932	0.02542	385	385	0	ANNUAL	LGO	5	
433272	5408432	0.03476	367	367	0	ANNUAL	LGO	5	
433272	5404932	0.02103	388	388	0	ANNUAL	LGO	5	
430272	5404932	0.03419	368	368	0	ANNUAL	LGO	5	
426772	5404932	0.03275	369	369	0	ANNUAL	LGO	5	
423272	5404932	0.02112	358	358	0	ANNUAL	LGO	5	
423272	5407932	0.04017	355.19	355.19	0	ANNUAL	LGO	5	
423272	5415932	0.02652	399	399	0	ANNUAL	LGO	5	
423272	5416932	0.02136	403.27	403.27	0	ANNUAL	LGO	5	
423272	5417932	0.01985	379	379	0	ANNUAL	LGO	5	
423272	5418932	0.01781	379	379	0	ANNUAL	LGO	5	
423272	5419932	0.01573	372	372	0	ANNUAL	LGO	5	
424272	5415932	0.03058	387.8	387.8	0	ANNUAL	LGO	5	
424272	5416932	0.02668	373	373	0	ANNUAL	LGO	5	
424272	5417932	0.02252	380	380	0	ANNUAL	LGO	5	
424272	5418932	0.019	373.82	373.82	0	ANNUAL	LGO	5	
424272	5419932	0.01624	379	379	0	ANNUAL	LGO	5	
425272	5415932	0.03576	379.39	379.39	0	ANNUAL	LGO	5	
425272	5416932	0.02852	375	375	0	ANNUAL	LGO	5	
425272	5417932	0.02332	373	373	0	ANNUAL	LGO	5	
425272	5418932	0.01955	380	380	0	ANNUAL	LGO	5	
425272	5419932	0.01674	375	375	0	ANNUAL	LGO	5	
426272	5415932	0.0381	379	379	0	ANNUAL	LGO	5	
426272	5416932	0.03041	380	380	0	ANNUAL	LGO	5	
426272	5417932	0.02499	376.3	376.3	0	ANNUAL	LGO	5	
426272	5418932	0.02095	373	373	0	ANNUAL	LGO	5	
426272	5419932	0.01785	369.47	369.47	0	ANNUAL	LGO	5	
427272	5415932	0.0404	385	385	0	ANNUAL	LGO	5	
427272	5416932	0.03187	381.6	381.6	0	ANNUAL	LGO	5	
427272	5417932	0.026	379	379	0	ANNUAL	LGO	5	
427272	5418932	0.02164	374.11	374.11	0	ANNUAL	LGO	5	
427272	5419932	0.0183	382.03	382.03	0	ANNUAL	LGO	5	

428272	5415932	0.03907	376	376	0	ANNUAL	LGO	5
428272	5416932	0.03132	378.06	378.06	0	ANNUAL	LGO	5
428272	5417932	0.02575	380	380	0	ANNUAL	LGO	5
428272	5418932	0.02162	375	375	0	ANNUAL	LGO	5
428272	5419932	0.01838	362.92	362.92	0	ANNUAL	LGO	5
429272	5415932	0.03423	375.97	375.97	0	ANNUAL	LGO	5
429272	5416932	0.02708	373	373	0	ANNUAL	LGO	5
429272	5417932	0.02244	378.26	378.26	0	ANNUAL	LGO	5
429272	5418932	0.01915	377.04	377.04	0	ANNUAL	LGO	5
429272	5419932	0.01664	380	380	0	ANNUAL	LGO	5
430272	5415932	0.03416	378	400	0	ANNUAL	LGO	5
430272	5416932	0.02703	379.06	389	0	ANNUAL	LGO	5
430272	5417932	0.02186	370	370	0	ANNUAL	LGO	5
430272	5418932	0.01801	371	371	0	ANNUAL	LGO	5
430272	5419932	0.01518	369	369	0	ANNUAL	LGO	5
431272	5415932	0.03111	377	377	0	ANNUAL	LGO	5
431272	5416932	0.0268	401.29	401.29	0	ANNUAL	LGO	5
431272	5417932	0.02127	386.43	392	0	ANNUAL	LGO	5
431272	5418932	0.01815	367	367	0	ANNUAL	LGO	5
431272	5419932	0.01542	363	363	0	ANNUAL	LGO	5
432272	5415932	0.02436	383.19	383.19	0	ANNUAL	LGO	5
432272	5416932	0.02286	381.02	400	0	ANNUAL	LGO	5
432272	5417932	0.02061	379.99	379.99	0	ANNUAL	LGO	5
432272	5418932	0.01821	383.35	386	0	ANNUAL	LGO	5
432272	5419932	0.01536	375.1	412	0	ANNUAL	LGO	5
433272	5415932	0.01733	418.42	418.42	0	ANNUAL	LGO	5
433272	5416932	0.01841	378.66	433	0	ANNUAL	LGO	5
433272	5417932	0.01725	390.47	390.47	0	ANNUAL	LGO	5
433272	5418932	0.01628	378	378	0	ANNUAL	LGO	5
433272	5419932	0.01517	402	402	0	ANNUAL	LGO	5
434272	5415932	0.01531	389.22	421	0	ANNUAL	LGO	5
434272	5416932	0.01334	422	422	0	ANNUAL	LGO	5
434272	5417932	0.01425	382.42	423	0	ANNUAL	LGO	5
434272	5418932	0.01351	399.16	399.16	0	ANNUAL	LGO	5
434272	5419932	0.01315	376	412	0	ANNUAL	LGO	5
435272	5415932	0.01267	388.82	412	0	ANNUAL	LGO	5
435272	5416932	0.0123	382	382	0	ANNUAL	LGO	5
435272	5417932	0.01152	407.47	407.47	0	ANNUAL	LGO	5
435272	5418932	0.01147	393.3	393.3	0	ANNUAL	LGO	5
435272	5419932	0.01121	373.48	413	0	ANNUAL	LGO	5
436272	5415932	0.01085	389.81	401	0	ANNUAL	LGO	5
436272	5416932	0.01045	391.84	391.84	0	ANNUAL	LGO	5
436272	5417932	0.00987	400.01	400.01	0	ANNUAL	LGO	5
436272	5418932	0.00982	387.9	387.9	0	ANNUAL	LGO	5
436272	5419932	0.00962	377.51	388	0	ANNUAL	LGO	5
437272	5415932	0.0098	354	354	0	ANNUAL	LGO	5
437272	5416932	0.00918	369.34	369.34	0	ANNUAL	LGO	5
437272	5417932	0.00875	359.22	359.22	0	ANNUAL	LGO	5
437272	5418932	0.00857	376.38	376.38	0	ANNUAL	LGO	5

X	Y	Concentration (AVERAGE CONC) [ug/m^	Elevation (ZELEV	Hill Heights (ZHILL	Flagpole (ZFLAG	Averagin Period (AVE	Source Group (GRP	Rank	Net ID	Date (DATE(CON)
429472	5408332	0.32966	380	380	0	MONTH	LGO	1ST		2000-01-31 24 hr
429472	5408132	0.28958	376	376	0	MONTH	LGO	1ST		1997-12-31 24 hr
429472	5407932	0.28129	370.75	370.75	0	MONTH	LGO	1ST		1997-12-31 24 hr
429672	5408332	0.2956	377	377	0	MONTH	LGO	1ST		2000-01-31 24 hr
429672	5408132	0.27196	373	373	0	MONTH	LGO	1ST		2000-01-31 24 hr
429672	5407932	0.24275	367.86	367.86	0	MONTH	LGO	1ST		1997-12-31 24 hr
429872	5408332	0.26083	373.02	373.02	0	MONTH	LGO	1ST		2000-01-31 24 hr
429872	5408132	0.24951	368.5	368.5	0	MONTH	LGO	1ST		2000-01-31 24 hr
429872	5407932	0.22302	361.71	361.71	0	MONTH	LGO	1ST		2000-01-31 24 hr
430072	5408332	0.23104	370.65	370.65	0	MONTH	LGO	1ST		2000-01-31 24 hr
430072	5408132	0.22452	366.53	366.53	0	MONTH	LGO	1ST		2000-01-31 24 hr
430072	5407932	0.21036	360.08	360.08	0	MONTH	LGO	1ST		2000-01-31 24 hr
429272	5408732	0.41512	387	387	0	MONTH	LGO	1ST		2000-01-31 24 hr
429272	5408532	0.40856	385	385	0	MONTH	LGO	1ST		2000-01-31 24 hr
426272	5414932	0.10198	387	387	0	MONTH	LGO	1ST		1998-02-28 24 hr
433272	5414932	0.04405	394	411	0	MONTH	LGO	1ST		1999-01-31 24 hr
433272	5411932	0.08812	385	385	0	MONTH	LGO	1ST		1998-12-31 24 hr
433272	5408432	0.08386	367	367	0	MONTH	LGO	1ST		2000-01-31 24 hr
433272	5404932	0.05192	388	388	0	MONTH	LGO	1ST		1996-04-30 24 hr
430272	5404932	0.09635	368	368	0	MONTH	LGO	1ST		1997-12-31 24 hr
426772	5404932	0.15014	369	369	0	MONTH	LGO	1ST		2000-12-31 24 hr
423272	5404932	0.06711	358	358	0	MONTH	LGO	1ST		1999-01-31 24 hr
423272	5407932	0.14125	355.19	355.19	0	MONTH	LGO	1ST		1998-01-31 24 hr
423272	5415932	0.05374	399	399	0	MONTH	LGO	1ST		1996-12-31 24 hr
423272	5416932	0.04314	403.27	403.27	0	MONTH	LGO	1ST		1999-12-31 24 hr
423272	5417932	0.03834	379	379	0	MONTH	LGO	1ST		1999-12-31 24 hr
423272	5418932	0.04149	379	379	0	MONTH	LGO	1ST		1998-02-28 24 hr
423272	5419932	0.0396	372	372	0	MONTH	LGO	1ST		1998-02-28 24 hr
424272	5415932	0.05962	387.8	387.8	0	MONTH	LGO	1ST		1999-12-31 24 hr
424272	5416932	0.06402	373	373	0	MONTH	LGO	1ST		1998-02-28 24 hr
424272	5417932	0.05671	380	380	0	MONTH	LGO	1ST		1998-02-28 24 hr
424272	5418932	0.04612	373.82	373.82	0	MONTH	LGO	1ST		1998-02-28 24 hr
424272	5419932	0.03763	379	379	0	MONTH	LGO	1ST		1998-02-28 24 hr
425272	5415932	0.08734	379.39	379.39	0	MONTH	LGO	1ST		1998-02-28 24 hr
425272	5416932	0.06585	375	375	0	MONTH	LGO	1ST		1998-02-28 24 hr
425272	5417932	0.05157	373	373	0	MONTH	LGO	1ST		1998-02-28 24 hr
425272	5418932	0.04181	380	380	0	MONTH	LGO	1ST		1998-02-28 24 hr
425272	5419932	0.03485	375	375	0	MONTH	LGO	1ST		1998-02-28 24 hr
426272	5415932	0.08068	379	379	0	MONTH	LGO	1ST		1998-02-28 24 hr
426272	5416932	0.06474	380	380	0	MONTH	LGO	1ST		1998-02-28 24 hr
426272	5417932	0.05422	376.3	376.3	0	MONTH	LGO	1ST		1998-02-28 24 hr
426272	5418932	0.04659	373	373	0	MONTH	LGO	1ST		1998-02-28 24 hr
426272	5419932	0.0407	369.47	369.47	0	MONTH	LGO	1ST		1998-02-28 24 hr
427272	5415932	0.10149	385	385	0	MONTH	LGO	1ST		1998-02-28 24 hr
427272	5416932	0.08049	381.6	381.6	0	MONTH	LGO	1ST		1998-02-28 24 hr
427272	5417932	0.06667	379	379	0	MONTH	LGO	1ST		1998-02-28 24 hr
427272	5418932	0.05533	374.11	374.11	0	MONTH	LGO	1ST		1998-02-28 24 hr
427272	5419932	0.04532	382.03	382.03	0	MONTH	LGO	1ST		1998-02-28 24 hr
428272	5415932	0.10464	376	376	0	MONTH	LGO	1ST		1998-02-28 24 hr
428272	5416932	0.08693	378.06	378.06	0	MONTH	LGO	1ST		1998-02-28 24 hr
428272	5417932	0.07287	380	380	0	MONTH	LGO	1ST		1998-02-28 24 hr
428272	5418932	0.06172	375	375	0	MONTH	LGO	1ST		1998-02-28 24 hr
428272	5419932	0.05255	362.92	362.92	0	MONTH	LGO	1ST		1998-02-28 24 hr
429272	5415932	0.07255	375.97	375.97	0	MONTH	LGO	1ST		1998-02-28 24 hr
429272	5416932	0.05779	373	373	0	MONTH	LGO	1ST		1998-02-28 24 hr
429272	5417932	0.04896	378.26	378.26	0	MONTH	LGO	1ST		1998-02-28 24 hr
429272	5418932	0.04371	377.04	377.04	0	MONTH	LGO	1ST		1998-02-28 24 hr
429272	5419932	0.04001	380	380	0	MONTH	LGO	1ST		1998-02-28 24 hr
430272	5415932	0.09317	378	400	0	MONTH	LGO	1ST		2000-02-29 24 hr
430272	5416932	0.06965	379.06	389	0	MONTH	LGO	1ST		2000-02-29 24 hr
430272	5417932	0.04989	370	370	0	MONTH	LGO	1ST		2000-02-29 24 hr
430272	5418932	0.03886	371	371	0	MONTH	LGO	1ST		1998-02-28 24 hr
430272	5419932	0.03264	369	369	0	MONTH	LGO	1ST		1998-02-28 24 hr
431272	5415932	0.08814	377	377	0	MONTH	LGO	1ST		2000-02-29 24 hr
431272	5416932	0.06981	401.29	401.29	0	MONTH	LGO	1ST		2000-02-29 24 hr
431272	5417932	0.0597	386.43	392	0	MONTH	LGO	1ST		2000-02-29 24 hr
431272	5418932	0.04871	367	367	0	MONTH	LGO	1ST		2000-02-29 24 hr
431272	5419932	0.0386	363	363	0	MONTH	LGO	1ST		2000-02-29 24 hr
432272	5415932	0.07614	383.19	383.19	0	MONTH	LGO	1ST		2000-02-29 24 hr
432272	5416932	0.06709	381.02	400	0	MONTH	LGO	1ST		2000-02-29 24 hr
432272	5417932	0.05673	379.99	379.99	0	MONTH	LGO	1ST		2000-02-29 24 hr
432272	5418932	0.04823	383.35	386	0	MONTH	LGO	1ST		2000-02-29 24 hr
432272	5419932	0.04165	375.1	412	0	MONTH	LGO	1ST		2000-02-29 24 hr
433272	5415932	0.046	418.42	418.42	0	MONTH	LGO	1ST		1999-01-31 24 hr
433272	5416932	0.05356	378.66	433	0	MONTH	LGO	1ST		2000-02-29 24 hr
433272	5417932	0.05009	390.47	390.47	0	MONTH	LGO	1ST		2000-02-29 24 hr
433272	5418932	0.04633	378	378	0	MONTH	LGO	1ST		2000-02-29 24 hr
433272	5419932	0.03889	402	402	0	MONTH	LGO	1ST		2000-02-29 24 hr
434272	5415932	0.03482	389.22	421	0	MONTH	LGO	1ST		1999-01-31 24 hr
434272	5416932	0.03788	422	422	0	MONTH	LGO	1ST		1999-01-31 24 hr
434272	5417932	0.04248	382.42	423	0	MONTH	LGO	1ST		2000-02-29 24 hr
434272	5418932	0.04082	399.16	399.16	0	MONTH	LGO	1ST		2000-02-29 24 hr
434272	5419932	0.03856	376	412	0	MONTH	LGO	1ST		2000-02-29 24 hr

435272	5415932	0.02918	388.82	412	0	MONTH	LGO	1ST	1999-01-31	24 hr
435272	5416932	0.0292	382	382	0	MONTH	LGO	1ST	1999-01-31	24 hr
435272	5417932	0.03426	407.47	407.47	0	MONTH	LGO	1ST	1999-01-31	24 hr
435272	5418932	0.03341	393.3	393.3	0	MONTH	LGO	1ST	2000-02-29	24 hr
435272	5419932	0.03432	373.48	413	0	MONTH	LGO	1ST	2000-02-29	24 hr
436272	5415932	0.02721	389.81	401	0	MONTH	LGO	1ST	1999-12-31	24 hr
436272	5416932	0.02432	391.84	391.84	0	MONTH	LGO	1ST	1999-01-31	24 hr
436272	5417932	0.024	400.01	400.01	0	MONTH	LGO	1ST	1996-01-31	24 hr
436272	5418932	0.02758	387.9	387.9	0	MONTH	LGO	1ST	1999-01-31	24 hr
436272	5419932	0.02452	377.51	388	0	MONTH	LGO	1ST	2000-02-29	24 hr
437272	5415932	0.02403	354	354	0	MONTH	LGO	1ST	1999-12-31	24 hr
437272	5416932	0.02188	369.34	369.34	0	MONTH	LGO	1ST	1999-12-31	24 hr
437272	5417932	0.0193	359.22	359.22	0	MONTH	LGO	1ST	1999-01-31	24 hr
437272	5418932	0.02083	376.38	376.38	0	MONTH	LGO	1ST	1999-01-31	24 hr
437272	5419932	0.0227	383.1	390	0	MONTH	LGO	1ST	1999-01-31	24 hr
438272	5415932	0.02318	354	354	0	MONTH	LGO	1ST	1998-12-31	24 hr
438272	5416932	0.02102	378.99	378.99	0	MONTH	LGO	1ST	1999-12-31	24 hr
438272	5417932	0.01762	377.48	381	0	MONTH	LGO	1ST	1999-12-31	24 hr
438272	5418932	0.01655	380.16	389	0	MONTH	LGO	1ST	1999-01-31	24 hr
438272	5419932	0.01779	372.4	394	0	MONTH	LGO	1ST	1999-01-31	24 hr
434272	5414932	0.03677	376.5	376.5	0	MONTH	LGO	1ST	1999-12-31	24 hr
434272	5413932	0.04273	379.78	379.78	0	MONTH	LGO	1ST	1999-12-31	24 hr
434272	5412932	0.05737	380	380	0	MONTH	LGO	1ST	1998-12-31	24 hr
434272	5411932	0.07441	389	389	0	MONTH	LGO	1ST	1998-12-31	24 hr
434272	5410932	0.07708	384.8	384.8	0	MONTH	LGO	1ST	1998-12-31	24 hr
434272	5409932	0.07532	380	380	0	MONTH	LGO	1ST	1997-12-31	24 hr
434272	5408932	0.06637	374	374	0	MONTH	LGO	1ST	1998-12-31	24 hr
434272	5407932	0.07169	378	378	0	MONTH	LGO	1ST	2000-01-31	24 hr
434272	5406932	0.0513	390	390	0	MONTH	LGO	1ST	1998-01-31	24 hr
434272	5405932	0.05101	389.07	389.07	0	MONTH	LGO	1ST	1998-08-31	24 hr
434272	5404932	0.04726	396	396	0	MONTH	LGO	1ST	1996-01-31	24 hr
434272	5403932	0.03715	372	372	0	MONTH	LGO	1ST	1996-04-30	24 hr
434272	5402932	0.03974	377.6	377.6	0	MONTH	LGO	1ST	1997-12-31	24 hr
434272	5401932	0.03473	367.57	367.57	0	MONTH	LGO	1ST	1997-12-31	24 hr
434272	5400932	0.03772	370.03	370.03	0	MONTH	LGO	1ST	1997-12-31	24 hr
434272	5399932	0.03504	361.08	361.08	0	MONTH	LGO	1ST	1997-12-31	24 hr
435272	5414932	0.03503	377.01	377.01	0	MONTH	LGO	1ST	1999-12-31	24 hr
435272	5413932	0.04228	391	391	0	MONTH	LGO	1ST	1998-12-31	24 hr
435272	5412932	0.04974	388	388	0	MONTH	LGO	1ST	1998-12-31	24 hr
435272	5411932	0.0587	388.36	388.36	0	MONTH	LGO	1ST	1998-12-31	24 hr
435272	5410932	0.05841	385	385	0	MONTH	LGO	1ST	1998-12-31	24 hr
435272	5409932	0.06615	383	383	0	MONTH	LGO	1ST	1997-12-31	24 hr
435272	5408932	0.05139	380	380	0	MONTH	LGO	1ST	1998-12-31	24 hr
435272	5407932	0.05217	386.15	386.15	0	MONTH	LGO	1ST	2000-01-31	24 hr
435272	5406932	0.05586	391.39	391.39	0	MONTH	LGO	1ST	1996-01-31	24 hr
435272	5405932	0.04292	395	395	0	MONTH	LGO	1ST	1997-02-28	24 hr
435272	5404932	0.03925	389.45	389.45	0	MONTH	LGO	1ST	2000-01-31	24 hr
435272	5403932	0.03278	378.59	378.59	0	MONTH	LGO	1ST	1996-01-31	24 hr
435272	5402932	0.02928	371	371	0	MONTH	LGO	1ST	1996-04-30	24 hr
435272	5401932	0.03191	367	367	0	MONTH	LGO	1ST	1997-12-31	24 hr
435272	5400932	0.0274	361	361	0	MONTH	LGO	1ST	1997-12-31	24 hr
435272	5399932	0.02934	361	361	0	MONTH	LGO	1ST	1997-12-31	24 hr
436272	5414932	0.03287	395.5	395.5	0	MONTH	LGO	1ST	1998-12-31	24 hr
436272	5413932	0.04052	403	403	0	MONTH	LGO	1ST	2000-02-29	24 hr
436272	5412932	0.0489	391	391	0	MONTH	LGO	1ST	1998-12-31	24 hr
436272	5411932	0.05073	378	378	0	MONTH	LGO	1ST	1998-12-31	24 hr
436272	5410932	0.04564	383	383	0	MONTH	LGO	1ST	1998-12-31	24 hr
436272	5409932	0.05718	388.85	401	0	MONTH	LGO	1ST	1997-12-31	24 hr
436272	5408932	0.04213	393.51	393.51	0	MONTH	LGO	1ST	1999-12-31	24 hr
436272	5407932	0.04192	381.28	381.28	0	MONTH	LGO	1ST	1998-12-31	24 hr
436272	5406932	0.05103	383	383	0	MONTH	LGO	1ST	1996-01-31	24 hr
436272	5405932	0.03504	387.2	387.2	0	MONTH	LGO	1ST	1998-01-31	24 hr
436272	5404932	0.03511	387.75	387.75	0	MONTH	LGO	1ST	1998-08-31	24 hr
436272	5403932	0.02976	374.42	374.42	0	MONTH	LGO	1ST	2000-01-31	24 hr
436272	5402932	0.02583	376	376	0	MONTH	LGO	1ST	1996-04-30	24 hr
436272	5401932	0.0237	368	368	0	MONTH	LGO	1ST	1996-04-30	24 hr
436272	5400932	0.0264	370	370	0	MONTH	LGO	1ST	1997-12-31	24 hr
436272	5399932	0.02235	357.67	357.67	0	MONTH	LGO	1ST	1997-12-31	24 hr
437272	5414932	0.0291	361.94	361.94	0	MONTH	LGO	1ST	1998-12-31	24 hr
437272	5413932	0.03336	360	403	0	MONTH	LGO	1ST	1998-12-31	24 hr
437272	5412932	0.04035	369.93	402	0	MONTH	LGO	1ST	1998-12-31	24 hr
437272	5411932	0.04283	369.31	369.31	0	MONTH	LGO	1ST	1998-12-31	24 hr
437272	5410932	0.03802	370.89	370.89	0	MONTH	LGO	1ST	1998-12-31	24 hr
437272	5409932	0.04446	370.33	370.33	0	MONTH	LGO	1ST	1997-12-31	24 hr
437272	5408932	0.03468	374.64	374.64	0	MONTH	LGO	1ST	1999-12-31	24 hr
437272	5407932	0.03712	377	377	0	MONTH	LGO	1ST	1998-12-31	24 hr
437272	5406932	0.04133	381	381	0	MONTH	LGO	1ST	2000-01-31	24 hr
437272	5405932	0.03114	386	386	0	MONTH	LGO	1ST	1996-01-31	24 hr
437272	5404932	0.0296	385.46	385.46	0	MONTH	LGO	1ST	1997-02-28	24 hr
437272	5403932	0.02659	378	378	0	MONTH	LGO	1ST	2000-01-31	24 hr
437272	5402932	0.02463	377	377	0	MONTH	LGO	1ST	1996-01-31	24 hr
437272	5401932	0.02187	369	369	0	MONTH	LGO	1ST	1996-04-30	24 hr
437272	5400932	0.02013	367.59	367.59	0	MONTH	LGO	1ST	1997-12-31	24 hr
437272	5399932	0.02223	363	363	0	MONTH	LGO	1ST	1997-12-31	24 hr

*** THE MAXIMUM 100 24-HR AVERAGE CONCENTRATION VALUES FOR SOURCE GROUP: LG&PAG_H ***

RANK BY	YEAR	RANK	CONC	YYYYMM	XR	YR	TYPE	Ontario Reg. 419/05
1	1996	32	4.73474	2E+09	426128	5407693	DC	Discarded
1	1998	1	5.7396	2E+09	424499	5408579	DC	Discarded
1	2000	20	5.05113	2E+09	426189	5407696	DC	Discarded
2	1996	33	4.71693	2E+09	426068	5407740	DC	Discarded
2	1998	2	5.71679	2E+09	424480	5408523	DC	Discarded
2	2000	21	5.00803	2E+09	426128	5407693	DC	Discarded
3	1996	40	4.68546	2E+09	426091	5407696	DC	Discarded
3	1998	3	5.66754	2E+09	424480	5408573	DC	Discarded
3	2000	24	4.97963	2E+09	426288	5407696	DC	Discarded
4	1996	42	4.66553	2E+09	426189	5407696	DC	Discarded
4	1998	4	5.64909	2E+09	424480	5408473	DC	Discarded
4	2000	26	4.94163	2E+09	426091	5407696	DC	Discarded
5	1996	56	4.37789	2E+09	426091	5407600	DC	Discarded
5	1998	5	5.54124	2E+09	424430	5408523	DC	Discarded
5	2000	27	4.93874	2E+09	426068	5407740	DC	Discarded
6	1996	58	4.34829	2E+09	426189	5407600	DC	Discarded
6	1998	6	5.52961	2E+09	424430	5408473	DC	Discarded
6	2000	30	4.75583	2E+09	426189	5407600	DC	Discarded
7	1996	65	4.30702	2E+09	426288	5407696	DC	Discarded
7	1998	7	5.49638	2E+09	424480	5408423	DC	Discarded
7	2000	36	4.70286	2E+09	426387	5407696	DC	Discarded
8	1996	68	4.29201	2E+09	425992	5407696	DC	Discarded
8	1998	8	5.43583	2E+09	424430	5408573	DC	Discarded
8	2000	38	4.69235	2E+09	426288	5407600	DC	Discarded
9	1996	87	4.10111	2E+09	425992	5407600	DC	Discarded
9	1998	9	5.43375	2E+09	424430	5408423	DC	Discarded
9	2000	44	4.60625	2E+09	426091	5407600	DC	Discarded
10	1996	100	4.01842	2E+09	426288	5407600	DC	Discarded
10	1998	10	5.38822	2E+09	424380	5408473	DC	Discarded
10	2000	47	4.53046	2E+09	426068	5407740	DC	Highest
11	1998	11	5.3472	2E+09	424380	5408523	DC	Discarded
11	2000	48	4.49085	2E+09	426189	5407696	DC	
12	1998	12	5.34452	2E+09	424380	5408423	DC	Discarded
12	2000	49	4.47879	2E+09	425992	5407696	DC	
13	1998	13	5.24795	2E+09	424480	5408373	DC	Discarded
13	2000	50	4.46358	2E+09	426128	5407693	DC	
14	1998	14	5.22961	2E+09	424430	5408373	DC	Discarded
14	2000	52	4.44054	2E+09	426091	5407696	DC	
15	1998	15	5.21263	2E+09	424380	5408373	DC	Discarded
15	2000	53	4.42763	2E+09	426189	5407504	DC	
16	1998	16	5.19156	2E+09	424380	5408573	DC	Discarded
16	2000	55	4.37902	2E+09	426387	5407600	DC	
17	1998	17	5.18067	2E+09	424328	5408393	DC	Discarded
17	2000	57	4.35837	2E+09	426288	5407504	DC	
18	1998	18	5.0697	2E+09	424284	5408372	DC	Discarded
18	2000	66	4.30297	2E+09	426091	5407504	DC	

19	1998	19	5.06794	2E+09	424284	5408471	DC	Discarded
19	2000	69	4.2813	2E+09	425992	5407600	DC	
20	1998	22	4.99243	2E+09	424380	5408323	DC	Discarded
20	2000	72	4.26047	2E+09	425992	5407696	DC	
21	1998	23	4.98816	2E+09	424430	5408323	DC	Discarded
21	2000	74	4.21735	2E+09	426485	5407696	DC	
22	1998	25	4.96308	2E+09	424480	5408323	DC	Discarded
22	2000	75	4.21697	2E+09	426288	5407696	DC	
23	1998	28	4.84445	2E+09	424188	5408372	DC	Discarded
23	2000	78	4.16947	2E+09	426189	5407600	DC	
24	1998	29	4.75634	2E+09	424284	5408273	DC	Discarded
24	2000	79	4.15895	2E+09	424480	5408323	DC	
25	1998	31	4.74536	2E+09	424380	5408273	DC	Discarded
25	2000	80	4.15166	2E+09	426091	5407600	DC	
26	1998	34	4.71646	2E+09	424284	5408569	DC	Discarded
26	2000	81	4.149	2E+09	424480	5408373	DC	
27	1998	35	4.70726	2E+09	424430	5408273	DC	Discarded
27	2000	85	4.12153	2E+09	426189	5407408	DC	
28	1998	37	4.69744	2E+09	424188	5408471	DC	Discarded
28	2000	88	4.0878	2E+09	424480	5408273	DC	
29	1998	39	4.69131	2E+09	424188	5408273	DC	Discarded
29	2000	89	4.07531	2E+09	426091	5407408	DC	
30	1998	41	4.66746	2E+09	424128	5408393	DC	Discarded
30	2000	90	4.07043	2E+09	426387	5407504	DC	
31	1998	43	4.6484	2E+09	424480	5408273	DC	Discarded
31	2000	91	4.06711	2E+09	424480	5408423	DC	
32	1998	45	4.59492	2E+09	424092	5408372	DC	Discarded
32	2000	92	4.0664	2E+09	425992	5407504	DC	
33	1998	46	4.59228	2E+09	424092	5408273	DC	Discarded
33	2000	93	4.04994	2E+09	424430	5408323	DC	
34	1998	51	4.44579	2E+09	423995	5408273	DC	Discarded
34	2000	94	4.03434	2E+09	424430	5408273	DC	
35	1998	54	4.40528	2E+09	424128	5408193	DC	Discarded
35	2000	99	4.02164	2E+09	425992	5407600	DC	
36	1998	59	4.33842	2E+09	424328	5408193	DC	Discarded
37	1998	60	4.33834	2E+09	424117	5408177	DC	Discarded
38	1998	61	4.32356	2E+09	424216	5408177	DC	Discarded
39	1998	62	4.32224	2E+09	424018	5408177	DC	Discarded
40	1998	63	4.3171	2E+09	424092	5408471	DC	Discarded
41	1998	64	4.315	2E+09	423995	5408372	DC	Discarded
42	1998	67	4.29304	2E+09	423928	5408193	DC	Discarded
43	1998	70	4.26793	2E+09	423899	5408273	DC	Discarded
44	1998	71	4.26138	2E+09	423919	5408177	DC	Discarded
45	1998	73	4.25684	2E+09	424314	5408177	DC	Discarded
46	1998	76	4.20715	2E+09	424188	5408569	DC	Discarded
47	1998	77	4.18943	2E+09	427457	5407714	DC	
48	1998	82	4.14767	2E+09	424413	5408177	DC	
49	1998	83	4.13993	2E+09	427553	5407714	DC	
50	1998	84	4.13462	2E+09	423821	5408177	DC	

*** THE MAXIMUM 100 24-HR AVERAGE CONCENTRATION VALUES FOR SOURCE GROUP: MOBI ***

RANK BY '	YEAR	RANK	CONC	YYYYMM	XR	YR	TYPE	Ontario Reg. 419/05
1	1996	6	3.85853	2E+09	429102	5408830	DC	Discarded
1	1997	29	3.33796	2E+09	429102	5408830	DC	Discarded
1	1998	5	3.87253	2E+09	427720	5407741	DC	Discarded
1	1999	1	5.36198	2E+09	426917	5407750	DC	Discarded
1	2000	4	4.06234	2E+09	426068	5407740	DC	Discarded
2	1996	9	3.81571	2E+09	428808	5412548	DC	
2	1997	30	3.32856	2E+09	427720	5407741	DC	
2	1998	12	3.74127	2E+09	427700	5407741	DC	Discarded
2	1999	2	4.10163	2E+09	427700	5407741	DC	Highest
2	2000	23	3.50797	2E+09	426068	5407740	DC	
3	1996	10	3.79825	2E+09	426068	5407740	DC	
3	1997	32	3.25822	2E+09	426917	5407750	DC	
3	1998	13	3.72662	2E+09	427700	5407741	DC	
3	1999	3	4.09439	2E+09	427720	5407741	DC	
3	2000	24	3.46509	2E+09	426917	5407750	DC	
4	1996	18	3.59101	2E+09	429425	5408830	DC	
4	1997	35	3.199	2E+09	427700	5407741	DC	
4	1998	14	3.6263	2E+09	424499	5408579	DC	
4	1999	7	3.85576	2E+09	427700	5407741	DC	
4	2000	27	3.36231	2E+09	426068	5407740	DC	
5	1996	21	3.52782	2E+09	429102	5408830	DC	
5	1997	45	3.02214	2E+09	429425	5408830	DC	
5	1998	15	3.62111	2E+09	427720	5407741	DC	
5	1999	8	3.82637	2E+09	427720	5407741	DC	
5	2000	28	3.35828	2E+09	426068	5407740	DC	
6	1996	22	3.52772	2E+09	429102	5408830	DC	
6	1997	46	2.98299	2E+09	428564	5407591	DC	
6	1998	16	3.61648	2E+09	427718	5407601	DC	
6	1999	11	3.7539	2E+09	427718	5407601	DC	
6	2000	31	3.27261	2E+09	429102	5408830	DC	
7	1996	39	3.14618	2E+09	429272	5408732	DC	
7	1997	65	2.73004	2E+09	429272	5408732	DC	
7	1998	17	3.6048	2E+09	427720	5407741	DC	
7	1999	20	3.5483	2E+09	427718	5407601	DC	
7	2000	37	3.1645	2E+09	429093	5408498	DC	
8	1996	41	3.10711	2E+09	429272	5408732	DC	
8	1997	69	2.67362	2E+09	427718	5407601	DC	
8	1998	19	3.59052	2E+09	427700	5407741	DC	
8	1999	26	3.36582	2E+09	428564	5407591	DC	
8	2000	38	3.15171	2E+09	429102	5408830	DC	
9	1996	42	3.10231	2E+09	429425	5408830	DC	
9	1997	74	2.62414	2E+09	429102	5408830	DC	
9	1998	25	3.42499	2E+09	426068	5407740	DC	
9	1999	34	3.20348	2E+09	429102	5408830	DC	
9	2000	49	2.93165	2E+09	429272	5408732	DC	
10	1996	47	2.95463	2E+09	429272	5408732	DC	

10	1997	88	2.54682	2E+09	426068	5407740	DC
10	1998	33	3.21766	2E+09	427718	5407601	DC
10	1999	44	3.04227	2E+09	429425	5408830	DC
10	2000	50	2.92607	2E+09	429102	5408830	DC
11	1996	48	2.95166	2E+09	426068	5407740	DC
11	1998	36	3.17418	2E+09	427718	5407601	DC
11	1999	61	2.73889	2E+09	427720	5407741	DC
11	2000	51	2.92577	2E+09	429093	5408498	DC
12	1996	52	2.88928	2E+09	426917	5407750	DC
12	1998	40	3.14582	2E+09	429102	5408830	DC
12	1999	66	2.7159	2E+09	427700	5407741	DC
12	2000	53	2.88284	2E+09	429425	5408830	DC
13	1996	55	2.84509	2E+09	428808	5412548	DC
13	1998	43	3.08747	2E+09	423617	5407779	DC
13	1999	75	2.61715	2E+09	426068	5407740	DC
13	2000	54	2.84639	2E+09	429425	5408830	DC
14	1996	56	2.8438	2E+09	429093	5408498	DC
14	1998	58	2.79556	2E+09	426068	5407740	DC
14	1999	82	2.58485	2E+09	426068	5407740	DC
14	2000	59	2.75477	2E+09	429272	5408532	DC
15	1996	57	2.80177	2E+09	429272	5408532	DC
15	1998	60	2.74483	2E+09	427700	5407741	DC
15	1999	83	2.58107	2E+09	429272	5408732	DC
15	2000	67	2.68202	2E+09	426917	5407750	DC
16	1996	79	2.60239	2E+09	429425	5408830	DC
16	1998	62	2.73605	2E+09	425245	5406949	DC
16	1999	90	2.53996	2E+09	425276	5407752	DC
16	2000	68	2.67939	2E+09	429102	5408830	DC
17	1996	81	2.58913	2E+09	429414	5408504	DC
17	1998	63	2.73345	2E+09	429272	5408732	DC
17	1999	93	2.52602	2E+09	426917	5407750	DC
17	2000	71	2.66092	2E+09	429272	5408732	DC
18	1996	89	2.54222	2E+09	429431	5408490	DC
18	1998	64	2.73139	2E+09	427720	5407741	DC
18	2000	72	2.65473	2E+09	424499	5408579	DC
19	1998	70	2.67098	2E+09	426068	5407740	DC
19	2000	76	2.61345	2E+09	429272	5408532	DC
20	1998	73	2.64999	2E+09	426068	5407740	DC
20	2000	77	2.6106	2E+09	429093	5408498	DC
21	1998	80	2.59352	2E+09	429102	5408830	DC
21	2000	78	2.60597	2E+09	426917	5407750	DC
22	1998	84	2.56281	2E+09	424461	5407786	DC
22	2000	85	2.55115	2E+09	424461	5407786	DC
23	1998	87	2.54927	2E+09	426068	5407740	DC
23	2000	86	2.55045	2E+09	426917	5407750	DC
24	1998	91	2.537	2E+09	429425	5408830	DC
24	2000	94	2.51656	2E+09	429272	5408732	DC
25	1998	92	2.53223	2E+09	427718	5407601	DC
25	2000	96	2.50849	2E+09	427720	5407741	DC

*** THE MAXIMUM 100 24-HR AVERAGE CONCENTRATION VALUES FOR SOURCE GROUP: NPAG_HR ***

RANK BY	YEAR	RANK	CONC	YYYYMM	XR	YR	TYPE	Ontario Reg. 419/05
1	1996	39	6.25354	2E+09	423707	5408569	DC	Discarded
1	1998	5	7.04449	2E+09	424499	5408579	DC	Discarded
1	1999	78	5.8732	2E+09	422928	5408593	DC	Discarded
1	2000	1	7.36067	2E+09	423707	5408569	DC	Discarded
2	1996	50	6.16069	2E+09	423611	5408569	DC	Discarded
2	1998	6	7.02224	2E+09	424430	5408573	DC	Discarded
2	1999	79	5.86199	2E+09	423128	5408593	DC	Discarded
2	2000	2	7.34262	2E+09	423611	5408569	DC	Discarded
3	1996	53	6.13199	2E+09	423803	5408569	DC	Discarded
3	1998	7	7.0115	2E+09	424480	5408573	DC	Discarded
3	2000	3	7.23191	2E+09	423515	5408569	DC	Discarded
4	1996	71	5.94218	2E+09	423515	5408569	DC	Discarded
4	1998	8	7.00152	2E+09	424380	5408573	DC	Discarded
4	2000	4	7.15527	2E+09	423803	5408569	DC	Discarded
5	1996	82	5.82946	2E+09	423707	5408471	DC	Discarded
5	1998	10	6.84187	2E+09	424284	5408569	DC	Discarded
5	2000	9	6.97879	2E+09	423418	5408569	DC	Discarded
6	1996	89	5.79041	2E+09	423611	5408471	DC	Discarded
6	1998	17	6.6676	2E+09	424480	5408523	DC	Discarded
6	2000	11	6.77515	2E+09	423803	5408569	DC	Highest
7	1996	91	5.75817	2E+09	423899	5408569	DC	Discarded
7	1998	18	6.66248	2E+09	424430	5408523	DC	Discarded
7	2000	12	6.69153	2E+09	423611	5408471	DC	
8	1998	21	6.63084	2E+09	424380	5408523	DC	Discarded
8	2000	13	6.69049	2E+09	423899	5408569	DC	
9	1998	22	6.60333	2E+09	424188	5408569	DC	Discarded
9	2000	14	6.67608	2E+09	423707	5408471	DC	
10	1998	32	6.36675	2E+09	423328	5408593	DC	
10	2000	15	6.67457	2E+09	423707	5408569	DC	
11	1998	34	6.34018	2E+09	424480	5408473	DC	
11	2000	16	6.67127	2E+09	423707	5408569	DC	
12	1998	35	6.32124	2E+09	424430	5408473	DC	
12	2000	19	6.66084	2E+09	423611	5408569	DC	
13	1998	37	6.30381	2E+09	424092	5408569	DC	
13	2000	20	6.65408	2E+09	423328	5408593	DC	
14	1998	38	6.27967	2E+09	424380	5408473	DC	
14	2000	23	6.60022	2E+09	423515	5408471	DC	
15	1998	40	6.2481	2E+09	423322	5408569	DC	
15	2000	24	6.52978	2E+09	423515	5408569	DC	
16	1998	42	6.22643	2E+09	422128	5408593	DC	
16	2000	25	6.52973	2E+09	423899	5408569	DC	
17	1998	48	6.177	2E+09	421928	5408593	DC	
17	2000	26	6.5113	2E+09	423322	5408569	DC	
18	1998	54	6.12148	2E+09	424284	5408471	DC	
18	2000	27	6.41976	2E+09	423803	5408569	DC	
19	1998	58	6.09129	2E+09	423226	5408569	DC	

19	2000	28	6.40541	2E+09	423803	5408471	DC
20	1998	62	6.03873	2E+09	424480	5408423	DC
20	2000	29	6.37872	2E+09	423418	5408471	DC
21	1998	63	6.03446	2E+09	423418	5408569	DC
21	2000	30	6.37154	2E+09	423418	5408569	DC
22	1998	65	6.01113	2E+09	424430	5408423	DC
22	2000	31	6.36797	2E+09	423707	5408471	DC
23	1998	70	5.96188	2E+09	424380	5408423	DC
23	2000	33	6.34254	2E+09	423611	5408569	DC
24	1998	74	5.9068	2E+09	424188	5408471	DC
24	2000	36	6.31867	2E+09	423803	5408471	DC
25	1998	75	5.90107	2E+09	422328	5408593	DC
25	2000	41	6.23258	2E+09	423328	5408593	DC
26	1998	80	5.85614	2E+09	423995	5408569	DC
26	2000	43	6.21753	2E+09	423995	5408569	DC
27	1998	84	5.81268	2E+09	423226	5408471	DC
27	2000	44	6.2009	2E+09	423528	5408393	DC
28	1998	90	5.76052	2E+09	423130	5408569	DC
28	2000	45	6.19846	2E+09	423728	5408393	DC
29	1998	92	5.74581	2E+09	421728	5408593	DC
29	2000	46	6.18528	2E+09	423611	5408471	DC
30	1998	93	5.74274	2E+09	424480	5408373	DC
30	2000	47	6.18524	2E+09	423611	5408372	DC
31	1998	95	5.72974	2E+09	423803	5408569	DC
31	2000	49	6.17029	2E+09	423728	5408393	DC
32	1998	100	5.7189	2E+09	423128	5408593	DC
32	2000	51	6.14785	2E+09	423707	5408471	DC
33	2000	52	6.14086	2E+09	423707	5408372	DC
34	2000	55	6.116	2E+09	423322	5408569	DC
35	2000	56	6.10959	2E+09	423707	5408372	DC
36	2000	57	6.09491	2E+09	423611	5408471	DC
37	2000	59	6.07774	2E+09	423515	5408471	DC
38	2000	60	6.06622	2E+09	423515	5408372	DC
39	2000	61	6.04927	2E+09	423803	5408372	DC
40	2000	64	6.03376	2E+09	423322	5408471	DC
41	2000	66	5.99363	2E+09	423899	5408471	DC
42	2000	67	5.99079	2E+09	423226	5408569	DC
43	2000	68	5.99074	2E+09	423995	5408569	DC
44	2000	69	5.97224	2E+09	423899	5408471	DC
45	2000	72	5.92205	2E+09	423611	5408372	DC
46	2000	73	5.91328	2E+09	423515	5408569	DC
47	2000	76	5.89169	2E+09	423418	5408471	DC
48	2000	77	5.88586	2E+09	423899	5408569	DC
49	2000	81	5.85265	2E+09	423418	5408372	DC
50	2000	83	5.81606	2E+09	423611	5408372	DC
51	2000	85	5.8101	2E+09	423803	5408471	DC
52	2000	86	5.80987	2E+09	423528	5408393	DC
53	2000	87	5.80909	2E+09	424092	5408569	DC
54	2000	88	5.80369	2E+09	423707	5408273	DC

*** THE MAXIMUM 100 24-HR AVERAGE CONCENTRATION VALUES FOR SOURCE GROUP: OC1 ***

RANK BY '	YEAR	RANK	CONC	YYYYMM	XR	YR	TYPE	Ontario Reg. 419/05
1	1996	7	3.31858	2E+09	430381	5410114	DC	Discarded
1	1997	1	3.9803	2E+09	428808	5412548	DC	Discarded
1	1998	4	3.49312	2E+09	428808	5412548	DC	Discarded
1	1999	8	3.26643	2E+09	429102	5408830	DC	Discarded
1	2000	2	3.92919	2E+09	428808	5412548	DC	Discarded
2	1996	16	2.82108	2E+09	430381	5410114	DC	
2	1997	3	3.87742	2E+09	428808	5412548	DC	Highest
2	1998	6	3.40178	2E+09	429102	5408830	DC	
2	1999	11	2.95514	2E+09	429272	5408732	DC	Discarded
2	2000	5	3.45302	2E+09	428808	5412548	DC	
3	1996	17	2.75627	2E+09	428808	5412548	DC	
3	1997	23	2.55853	2E+09	429425	5408830	DC	
3	1998	10	3.0544	2E+09	429093	5408498	DC	
3	1999	12	2.92023	2E+09	430381	5410114	DC	
3	2000	9	3.19202	2E+09	430381	5410114	DC	
4	1996	36	2.2873	2E+09	428808	5412548	DC	
4	1997	24	2.52341	2E+09	430381	5410114	DC	
4	1998	13	2.90187	2E+09	429425	5408830	DC	
4	1999	14	2.88295	2E+09	429102	5408830	DC	
4	2000	18	2.71876	2E+09	430381	5410114	DC	
5	1996	40	2.23077	2E+09	430422	5413312	DC	
5	1997	30	2.40951	2E+09	429272	5408732	DC	
5	1998	15	2.83986	2E+09	429272	5408732	DC	
5	1999	19	2.64814	2E+09	429272	5408732	DC	
5	2000	21	2.56623	2E+09	429614	5413326	DC	
6	1996	52	2.15271	2E+09	430381	5410114	DC	
6	1997	49	2.16014	2E+09	428809	5413327	DC	
6	1998	20	2.58115	2E+09	429102	5408830	DC	
6	1999	22	2.56537	2E+09	429272	5408532	DC	
6	2000	26	2.50101	2E+09	428808	5412548	DC	
7	1996	87	1.94692	2E+09	430407	5412512	DC	
7	1997	64	2.08014	2E+09	429102	5408830	DC	
7	1998	25	2.50944	2E+09	429272	5408732	DC	
7	1999	31	2.39088	2E+09	428808	5412548	DC	
7	2000	27	2.4984	2E+09	428809	5413327	DC	
8	1997	69	2.05081	2E+09	429093	5408498	DC	
8	1998	28	2.48327	2E+09	429272	5408532	DC	
8	1999	33	2.37634	2E+09	429272	5408532	DC	
8	2000	46	2.18355	2E+09	428809	5413327	DC	
9	1997	70	2.04632	2E+09	430381	5410114	DC	
9	1998	29	2.46134	2E+09	429272	5408732	DC	
9	1999	37	2.25897	2E+09	429425	5408830	DC	
9	2000	47	2.17028	2E+09	429093	5408498	DC	
10	1997	75	2.02432	2E+09	429414	5408504	DC	
10	1998	32	2.3889	2E+09	429102	5408830	DC	
10	1999	38	2.25886	2E+09	429414	5408504	DC	

10	2000	48	2.16897	2E+09	428808	5412548	DC
11	1997	76	2.02076	2E+09	429431	5408490	DC
11	1998	34	2.35508	2E+09	429414	5408504	DC
11	1999	41	2.22131	2E+09	430407	5412512	DC
11	2000	59	2.10369	2E+09	430381	5410114	DC
12	1997	78	1.99264	2E+09	428808	5412548	DC
12	1998	35	2.34403	2E+09	429431	5408490	DC
12	1999	43	2.21947	2E+09	429431	5408490	DC
12	2000	60	2.09683	2E+09	429425	5408830	DC
13	1997	79	1.98864	2E+09	429102	5408830	DC
13	1998	39	2.24418	2E+09	429425	5408830	DC
13	1999	44	2.21147	2E+09	429093	5408498	DC
13	2000	77	2.0012	2E+09	429425	5408830	DC
14	1997	83	1.98348	2E+09	428808	5412548	DC
14	1998	42	2.22069	2E+09	430381	5410114	DC
14	1999	51	2.15491	2E+09	429102	5408830	DC
14	2000	81	1.98425	2E+09	428808	5412548	DC
15	1997	91	1.92795	2E+09	429102	5408830	DC
15	1998	45	2.19954	2E+09	428808	5412548	DC
15	1999	54	2.12374	2E+09	430361	5408478	DC
15	2000	84	1.97135	2E+09	430381	5410114	DC
16	1998	50	2.15747	2E+09	429272	5408532	DC
16	1999	56	2.11604	2E+09	428808	5412548	DC
16	2000	88	1.94072	2E+09	431997	5410087	DC
17	1998	53	2.14412	2E+09	428808	5412548	DC
17	1999	57	2.11019	2E+09	428808	5412548	DC
17	2000	89	1.93421	2E+09	429272	5408732	DC
18	1998	55	2.12177	2E+09	429102	5408830	DC
18	1999	58	2.10511	2E+09	428564	5407591	DC
18	2000	90	1.93083	2E+09	429093	5408498	DC
19	1998	61	2.09393	2E+09	429425	5408830	DC
19	1999	65	2.07515	2E+09	430222	5408485	DC
19	2000	92	1.92488	2E+09	429102	5408830	DC
20	1998	62	2.09108	2E+09	429472	5408332	DC
20	1999	68	2.05145	2E+09	429472	5408332	DC
21	1998	63	2.08112	2E+09	428808	5412548	DC
21	1999	72	2.03361	2E+09	428808	5412548	DC
22	1998	66	2.06448	2E+09	428808	5412548	DC
22	1999	73	2.0305	2E+09	429414	5408504	DC
23	1998	67	2.06269	2E+09	429272	5408532	DC
23	1999	82	1.98406	2E+09	429431	5408490	DC
24	1998	71	2.03626	2E+09	429414	5408504	DC
24	1999	86	1.94776	2E+09	429102	5408830	DC
25	1998	74	2.02873	2E+09	429672	5408332	DC
25	1999	93	1.92444	2E+09	429272	5408732	DC
26	1998	80	1.9859	2E+09	429431	5408490	DC
26	1999	95	1.91209	2E+09	428808	5412548	DC
27	1998	85	1.95805	2E+09	428808	5412548	DC
27	1999	96	1.9099	2E+09	429093	5408498	DC

X	Y	Concentra	Elevation	Hill Heigh	Flagpole (	Averagin	Source Gr	Num Year	Net ID
429472	5408332	0.10681	380	380	0	ANNUAL	OC1	5	
429472	5408132	0.09198	376	376	0	ANNUAL	OC1	5	
429472	5407932	0.07988	370.75	370.75	0	ANNUAL	OC1	5	
429672	5408332	0.10771	377	377	0	ANNUAL	OC1	5	
429672	5408132	0.09304	373	373	0	ANNUAL	OC1	5	
429672	5407932	0.08077	367.86	367.86	0	ANNUAL	OC1	5	
429872	5408332	0.1064	373.02	373.02	0	ANNUAL	OC1	5	
429872	5408132	0.09283	368.5	368.5	0	ANNUAL	OC1	5	
429872	5407932	0.08076	361.71	361.71	0	ANNUAL	OC1	5	
430072	5408332	0.10275	370.65	370.65	0	ANNUAL	OC1	5	
430072	5408132	0.09121	366.53	366.53	0	ANNUAL	OC1	5	
430072	5407932	0.08036	360.08	360.08	0	ANNUAL	OC1	5	
429272	5408732	0.14528	387	387	0	ANNUAL	OC1	5	
429272	5408532	0.12233	385	385	0	ANNUAL	OC1	5	
426272	5414932	0.05997	387	387	0	ANNUAL	OC1	5	
433272	5414932	0.02735	394	411	0	ANNUAL	OC1	5	
433272	5411932	0.04274	385	385	0	ANNUAL	OC1	5	
433272	5408432	0.04184	367	367	0	ANNUAL	OC1	5	
433272	5404932	0.02163	388	388	0	ANNUAL	OC1	5	
430272	5404932	0.02311	368	368	0	ANNUAL	OC1	5	
426772	5404932	0.02186	369	369	0	ANNUAL	OC1	5	
423272	5404932	0.01513	358	358	0	ANNUAL	OC1	5	
423272	5407932	0.02878	355.19	355.19	0	ANNUAL	OC1	5	
423272	5415932	0.02231	399	399	0	ANNUAL	OC1	5	
423272	5416932	0.02086	403.27	403.27	0	ANNUAL	OC1	5	
423272	5417932	0.02014	379	379	0	ANNUAL	OC1	5	
423272	5418932	0.01804	379	379	0	ANNUAL	OC1	5	
423272	5419932	0.01587	372	372	0	ANNUAL	OC1	5	
424272	5415932	0.02995	387.8	387.8	0	ANNUAL	OC1	5	
424272	5416932	0.02707	373	373	0	ANNUAL	OC1	5	
424272	5417932	0.02339	380	380	0	ANNUAL	OC1	5	
424272	5418932	0.02041	373.82	373.82	0	ANNUAL	OC1	5	
424272	5419932	0.01824	379	379	0	ANNUAL	OC1	5	
425272	5415932	0.03867	379.39	379.39	0	ANNUAL	OC1	5	
425272	5416932	0.03215	375	375	0	ANNUAL	OC1	5	
425272	5417932	0.02734	373	373	0	ANNUAL	OC1	5	
425272	5418932	0.02317	380	380	0	ANNUAL	OC1	5	
425272	5419932	0.01952	375	375	0	ANNUAL	OC1	5	
426272	5415932	0.0473	379	379	0	ANNUAL	OC1	5	
426272	5416932	0.037	380	380	0	ANNUAL	OC1	5	
426272	5417932	0.02943	376.3	376.3	0	ANNUAL	OC1	5	
426272	5418932	0.02404	373	373	0	ANNUAL	OC1	5	
426272	5419932	0.0201	369.47	369.47	0	ANNUAL	OC1	5	
427272	5415932	0.05104	385	385	0	ANNUAL	OC1	5	
427272	5416932	0.03958	381.6	381.6	0	ANNUAL	OC1	5	
427272	5417932	0.03145	379	379	0	ANNUAL	OC1	5	
427272	5418932	0.02569	374.11	374.11	0	ANNUAL	OC1	5	
427272	5419932	0.02158	382.03	382.03	0	ANNUAL	OC1	5	

428272	5415932	0.05569	376	376	0	ANNUAL	OC1	5
428272	5416932	0.04199	378.06	378.06	0	ANNUAL	OC1	5
428272	5417932	0.03302	380	380	0	ANNUAL	OC1	5
428272	5418932	0.02672	375	375	0	ANNUAL	OC1	5
428272	5419932	0.02206	362.92	362.92	0	ANNUAL	OC1	5
429272	5415932	0.05166	375.97	375.97	0	ANNUAL	OC1	5
429272	5416932	0.03986	373	373	0	ANNUAL	OC1	5
429272	5417932	0.03203	378.26	378.26	0	ANNUAL	OC1	5
429272	5418932	0.02631	377.04	377.04	0	ANNUAL	OC1	5
429272	5419932	0.0221	380	380	0	ANNUAL	OC1	5
430272	5415932	0.04734	378	400	0	ANNUAL	OC1	5
430272	5416932	0.03551	379.06	389	0	ANNUAL	OC1	5
430272	5417932	0.02787	370	370	0	ANNUAL	OC1	5
430272	5418932	0.02298	371	371	0	ANNUAL	OC1	5
430272	5419932	0.01951	369	369	0	ANNUAL	OC1	5
431272	5415932	0.04485	377	377	0	ANNUAL	OC1	5
431272	5416932	0.03371	401.29	401.29	0	ANNUAL	OC1	5
431272	5417932	0.0275	386.43	392	0	ANNUAL	OC1	5
431272	5418932	0.02244	367	367	0	ANNUAL	OC1	5
431272	5419932	0.01846	363	363	0	ANNUAL	OC1	5
432272	5415932	0.03524	383.19	383.19	0	ANNUAL	OC1	5
432272	5416932	0.03163	381.02	400	0	ANNUAL	OC1	5
432272	5417932	0.02701	379.99	379.99	0	ANNUAL	OC1	5
432272	5418932	0.02229	383.35	386	0	ANNUAL	OC1	5
432272	5419932	0.01871	375.1	412	0	ANNUAL	OC1	5
433272	5415932	0.02383	418.42	418.42	0	ANNUAL	OC1	5
433272	5416932	0.02496	378.66	433	0	ANNUAL	OC1	5
433272	5417932	0.02284	390.47	390.47	0	ANNUAL	OC1	5
433272	5418932	0.02094	378	378	0	ANNUAL	OC1	5
433272	5419932	0.01863	402	402	0	ANNUAL	OC1	5
434272	5415932	0.02012	389.22	421	0	ANNUAL	OC1	5
434272	5416932	0.01754	422	422	0	ANNUAL	OC1	5
434272	5417932	0.0187	382.42	423	0	ANNUAL	OC1	5
434272	5418932	0.01727	399.16	399.16	0	ANNUAL	OC1	5
434272	5419932	0.01651	376	412	0	ANNUAL	OC1	5
435272	5415932	0.01624	388.82	412	0	ANNUAL	OC1	5
435272	5416932	0.01579	382	382	0	ANNUAL	OC1	5
435272	5417932	0.01457	407.47	407.47	0	ANNUAL	OC1	5
435272	5418932	0.01431	393.3	393.3	0	ANNUAL	OC1	5
435272	5419932	0.01397	373.48	413	0	ANNUAL	OC1	5
436272	5415932	0.014	389.81	401	0	ANNUAL	OC1	5
436272	5416932	0.01278	391.84	391.84	0	ANNUAL	OC1	5
436272	5417932	0.01224	400.01	400.01	0	ANNUAL	OC1	5
436272	5418932	0.01204	387.9	387.9	0	ANNUAL	OC1	5
436272	5419932	0.01179	377.51	388	0	ANNUAL	OC1	5
437272	5415932	0.01196	354	354	0	ANNUAL	OC1	5
437272	5416932	0.01133	369.34	369.34	0	ANNUAL	OC1	5
437272	5417932	0.01059	359.22	359.22	0	ANNUAL	OC1	5
437272	5418932	0.01035	376.38	376.38	0	ANNUAL	OC1	5

X	Y	Concentration (AVERAGE CONC) [ug/m^	Elevation (ZELEV	Hill Heights (ZHILL	Flagpole (ZFLAG	Averagin Period (AVE	Source Group (GRP	Rank	Net ID	Date (DATE(CON)
429472	5408332	0.29816	380	380	0	MONTH	OC1	1ST		1997-12-31 24 hr
429472	5408132	0.25901	376	376	0	MONTH	OC1	1ST		1997-12-31 24 hr
429472	5407932	0.22631	370.75	370.75	0	MONTH	OC1	1ST		1997-12-31 24 hr
429672	5408332	0.30182	377	377	0	MONTH	OC1	1ST		1997-12-31 24 hr
429672	5408132	0.25674	373	373	0	MONTH	OC1	1ST		1997-12-31 24 hr
429672	5407932	0.22337	367.86	367.86	0	MONTH	OC1	1ST		1997-12-31 24 hr
429872	5408332	0.31541	373.02	373.02	0	MONTH	OC1	1ST		1997-12-31 24 hr
429872	5408132	0.26295	368.5	368.5	0	MONTH	OC1	1ST		1997-12-31 24 hr
429872	5407932	0.22105	361.71	361.71	0	MONTH	OC1	1ST		1997-12-31 24 hr
430072	5408332	0.32052	370.65	370.65	0	MONTH	OC1	1ST		1997-12-31 24 hr
430072	5408132	0.27611	366.53	366.53	0	MONTH	OC1	1ST		1997-12-31 24 hr
430072	5407932	0.2316	360.08	360.08	0	MONTH	OC1	1ST		1997-12-31 24 hr
429272	5408732	0.40551	387	387	0	MONTH	OC1	1ST		1997-12-31 24 hr
429272	5408532	0.34608	385	385	0	MONTH	OC1	1ST		1997-12-31 24 hr
426272	5414932	0.11646	387	387	0	MONTH	OC1	1ST		1999-12-31 24 hr
433272	5414932	0.06246	394	411	0	MONTH	OC1	1ST		1999-01-31 24 hr
433272	5411932	0.13668	385	385	0	MONTH	OC1	1ST		1998-12-31 24 hr
433272	5408432	0.0812	367	367	0	MONTH	OC1	1ST		1998-01-31 24 hr
433272	5404932	0.0624	388	388	0	MONTH	OC1	1ST		1997-12-31 24 hr
430272	5404932	0.06518	368	368	0	MONTH	OC1	1ST		1997-12-31 24 hr
426772	5404932	0.09807	369	369	0	MONTH	OC1	1ST		2000-12-31 24 hr
423272	5404932	0.0478	358	358	0	MONTH	OC1	1ST		1999-01-31 24 hr
423272	5407932	0.09791	355.19	355.19	0	MONTH	OC1	1ST		1998-01-31 24 hr
423272	5415932	0.05706	399	399	0	MONTH	OC1	1ST		1998-01-31 24 hr
423272	5416932	0.06311	403.27	403.27	0	MONTH	OC1	1ST		2000-01-31 24 hr
423272	5417932	0.04361	379	379	0	MONTH	OC1	1ST		2000-01-31 24 hr
423272	5418932	0.03386	379	379	0	MONTH	OC1	1ST		1999-12-31 24 hr
423272	5419932	0.0304	372	372	0	MONTH	OC1	1ST		1999-12-31 24 hr
424272	5415932	0.08014	387.8	387.8	0	MONTH	OC1	1ST		2000-01-31 24 hr
424272	5416932	0.05266	373	373	0	MONTH	OC1	1ST		2000-01-31 24 hr
424272	5417932	0.04477	380	380	0	MONTH	OC1	1ST		1999-12-31 24 hr
424272	5418932	0.03916	373.82	373.82	0	MONTH	OC1	1ST		1999-12-31 24 hr
424272	5419932	0.04199	379	379	0	MONTH	OC1	1ST		1998-02-28 24 hr
425272	5415932	0.07306	379.39	379.39	0	MONTH	OC1	1ST		1999-12-31 24 hr
425272	5416932	0.06177	375	375	0	MONTH	OC1	1ST		1999-12-31 24 hr
425272	5417932	0.06466	373	373	0	MONTH	OC1	1ST		1998-02-28 24 hr
425272	5418932	0.05773	380	380	0	MONTH	OC1	1ST		1998-02-28 24 hr
425272	5419932	0.04724	375	375	0	MONTH	OC1	1ST		1998-02-28 24 hr
426272	5415932	0.11429	379	379	0	MONTH	OC1	1ST		1998-02-28 24 hr
426272	5416932	0.08983	380	380	0	MONTH	OC1	1ST		1998-02-28 24 hr
426272	5417932	0.06791	376.3	376.3	0	MONTH	OC1	1ST		1998-02-28 24 hr
426272	5418932	0.05312	373	373	0	MONTH	OC1	1ST		1998-02-28 24 hr
426272	5419932	0.04303	369.47	369.47	0	MONTH	OC1	1ST		1998-02-28 24 hr
427272	5415932	0.10975	385	385	0	MONTH	OC1	1ST		1998-02-28 24 hr
427272	5416932	0.08463	381.6	381.6	0	MONTH	OC1	1ST		1998-02-28 24 hr
427272	5417932	0.06769	379	379	0	MONTH	OC1	1ST		1998-02-28 24 hr
427272	5418932	0.05626	374.11	374.11	0	MONTH	OC1	1ST		1998-02-28 24 hr
427272	5419932	0.04829	382.03	382.03	0	MONTH	OC1	1ST		1998-02-28 24 hr
428272	5415932	0.14406	376	376	0	MONTH	OC1	1ST		1998-02-28 24 hr
428272	5416932	0.10894	378.06	378.06	0	MONTH	OC1	1ST		1998-02-28 24 hr
428272	5417932	0.08571	380	380	0	MONTH	OC1	1ST		1998-02-28 24 hr
428272	5418932	0.06925	375	375	0	MONTH	OC1	1ST		1998-02-28 24 hr
428272	5419932	0.05692	362.92	362.92	0	MONTH	OC1	1ST		1998-02-28 24 hr
429272	5415932	0.1284	375.97	375.97	0	MONTH	OC1	1ST		1998-02-28 24 hr
429272	5416932	0.10509	373	373	0	MONTH	OC1	1ST		1998-02-28 24 hr
429272	5417932	0.0879	378.26	378.26	0	MONTH	OC1	1ST		1998-02-28 24 hr
429272	5418932	0.07386	377.04	377.04	0	MONTH	OC1	1ST		1998-02-28 24 hr
429272	5419932	0.0628	380	380	0	MONTH	OC1	1ST		1998-02-28 24 hr
430272	5415932	0.11074	378	400	0	MONTH	OC1	1ST		2000-02-29 24 hr
430272	5416932	0.07429	379.06	389	0	MONTH	OC1	1ST		1998-02-28 24 hr
430272	5417932	0.05942	370	370	0	MONTH	OC1	1ST		1998-02-28 24 hr
430272	5418932	0.05013	371	371	0	MONTH	OC1	1ST		1998-02-28 24 hr
430272	5419932	0.04434	369	369	0	MONTH	OC1	1ST		1998-02-28 24 hr
431272	5415932	0.12524	377	377	0	MONTH	OC1	1ST		2000-02-29 24 hr
431272	5416932	0.09496	401.29	401.29	0	MONTH	OC1	1ST		2000-02-29 24 hr
431272	5417932	0.07308	386.43	392	0	MONTH	OC1	1ST		2000-02-29 24 hr
431272	5418932	0.05179	367	367	0	MONTH	OC1	1ST		2000-02-29 24 hr
431272	5419932	0.03915	363	363	0	MONTH	OC1	1ST		1998-02-28 24 hr
432272	5415932	0.10448	383.19	383.19	0	MONTH	OC1	1ST		2000-02-29 24 hr
432272	5416932	0.09088	381.02	400	0	MONTH	OC1	1ST		2000-02-29 24 hr
432272	5417932	0.07412	379.99	379.99	0	MONTH	OC1	1ST		2000-02-29 24 hr
432272	5418932	0.06105	383.35	386	0	MONTH	OC1	1ST		2000-02-29 24 hr
432272	5419932	0.05	375.1	412	0	MONTH	OC1	1ST		2000-02-29 24 hr
433272	5415932	0.0615	418.42	418.42	0	MONTH	OC1	1ST		1999-01-31 24 hr
433272	5416932	0.07192	378.66	433	0	MONTH	OC1	1ST		2000-02-29 24 hr
433272	5417932	0.0663	390.47	390.47	0	MONTH	OC1	1ST		2000-02-29 24 hr
433272	5418932	0.05851	378	378	0	MONTH	OC1	1ST		2000-02-29 24 hr
433272	5419932	0.04882	402	402	0	MONTH	OC1	1ST		2000-02-29 24 hr
434272	5415932	0.04685	389.22	421	0	MONTH	OC1	1ST		1999-01-31 24 hr
434272	5416932	0.04818	422	422	0	MONTH	OC1	1ST		1999-01-31 24 hr
434272	5417932	0.05209	382.42	423	0	MONTH	OC1	1ST		2000-02-29 24 hr
434272	5418932	0.05101	399.16	399.16	0	MONTH	OC1	1ST		2000-02-29 24 hr
434272	5419932	0.04749	376	412	0	MONTH	OC1	1ST		2000-02-29 24 hr

435272	5415932	0.03768	388.82	412	0	MONTH	OC1	1ST	1999-12-31	24 hr
435272	5416932	0.03755	382	382	0	MONTH	OC1	1ST	1999-01-31	24 hr
435272	5417932	0.04128	407.47	407.47	0	MONTH	OC1	1ST	1999-01-31	24 hr
435272	5418932	0.04138	393.3	393.3	0	MONTH	OC1	1ST	2000-02-29	24 hr
435272	5419932	0.04205	373.48	413	0	MONTH	OC1	1ST	2000-02-29	24 hr
436272	5415932	0.03559	389.81	401	0	MONTH	OC1	1ST	1999-12-31	24 hr
436272	5416932	0.02804	391.84	391.84	0	MONTH	OC1	1ST	1999-12-31	24 hr
436272	5417932	0.02706	400.01	400.01	0	MONTH	OC1	1ST	1999-01-31	24 hr
436272	5418932	0.03144	387.9	387.9	0	MONTH	OC1	1ST	1999-01-31	24 hr
436272	5419932	0.03006	377.51	388	0	MONTH	OC1	1ST	2000-02-29	24 hr
437272	5415932	0.03108	354	354	0	MONTH	OC1	1ST	1998-12-31	24 hr
437272	5416932	0.02806	369.34	369.34	0	MONTH	OC1	1ST	1999-12-31	24 hr
437272	5417932	0.02266	359.22	359.22	0	MONTH	OC1	1ST	1999-01-31	24 hr
437272	5418932	0.02486	376.38	376.38	0	MONTH	OC1	1ST	1999-01-31	24 hr
437272	5419932	0.02508	383.1	390	0	MONTH	OC1	1ST	1999-01-31	24 hr
438272	5415932	0.02927	354	354	0	MONTH	OC1	1ST	1998-12-31	24 hr
438272	5416932	0.02394	378.99	378.99	0	MONTH	OC1	1ST	1999-12-31	24 hr
438272	5417932	0.02258	377.48	381	0	MONTH	OC1	1ST	1999-12-31	24 hr
438272	5418932	0.01946	380.16	389	0	MONTH	OC1	1ST	1999-01-31	24 hr
438272	5419932	0.02089	372.4	394	0	MONTH	OC1	1ST	1999-01-31	24 hr
434272	5414932	0.05282	376.5	376.5	0	MONTH	OC1	1ST	1999-12-31	24 hr
434272	5413932	0.06701	379.78	379.78	0	MONTH	OC1	1ST	1998-12-31	24 hr
434272	5412932	0.08943	380	380	0	MONTH	OC1	1ST	1998-12-31	24 hr
434272	5411932	0.10026	389	389	0	MONTH	OC1	1ST	1998-12-31	24 hr
434272	5410932	0.09718	384.8	384.8	0	MONTH	OC1	1ST	1997-12-31	24 hr
434272	5409932	0.08804	380	380	0	MONTH	OC1	1ST	1998-12-31	24 hr
434272	5408932	0.09052	374	374	0	MONTH	OC1	1ST	1996-01-31	24 hr
434272	5407932	0.06048	378	378	0	MONTH	OC1	1ST	1997-02-28	24 hr
434272	5406932	0.05888	390	390	0	MONTH	OC1	1ST	2000-01-31	24 hr
434272	5405932	0.0499	389.07	389.07	0	MONTH	OC1	1ST	1996-04-30	24 hr
434272	5404932	0.05459	396	396	0	MONTH	OC1	1ST	1997-12-31	24 hr
434272	5403932	0.04675	372	372	0	MONTH	OC1	1ST	1997-12-31	24 hr
434272	5402932	0.04827	377.6	377.6	0	MONTH	OC1	1ST	1997-12-31	24 hr
434272	5401932	0.03885	367.57	367.57	0	MONTH	OC1	1ST	1997-12-31	24 hr
434272	5400932	0.02708	370.03	370.03	0	MONTH	OC1	1ST	1997-12-31	24 hr
434272	5399932	0.02339	361.08	361.08	0	MONTH	OC1	1ST	2000-12-31	24 hr
435272	5414932	0.04415	377.01	377.01	0	MONTH	OC1	1ST	1998-12-31	24 hr
435272	5413932	0.05657	391	391	0	MONTH	OC1	1ST	1998-12-31	24 hr
435272	5412932	0.07459	388	388	0	MONTH	OC1	1ST	1998-12-31	24 hr
435272	5411932	0.07466	388.36	388.36	0	MONTH	OC1	1ST	1998-12-31	24 hr
435272	5410932	0.07731	385	385	0	MONTH	OC1	1ST	1997-12-31	24 hr
435272	5409932	0.06751	383	383	0	MONTH	OC1	1ST	1998-12-31	24 hr
435272	5408932	0.07164	380	380	0	MONTH	OC1	1ST	2000-01-31	24 hr
435272	5407932	0.05167	386.15	386.15	0	MONTH	OC1	1ST	1996-01-31	24 hr
435272	5406932	0.04875	391.39	391.39	0	MONTH	OC1	1ST	2000-01-31	24 hr
435272	5405932	0.04596	395	395	0	MONTH	OC1	1ST	1996-01-31	24 hr
435272	5404932	0.03764	389.45	389.45	0	MONTH	OC1	1ST	1996-04-30	24 hr
435272	5403932	0.03932	378.59	378.59	0	MONTH	OC1	1ST	1997-12-31	24 hr
435272	5402932	0.03559	371	371	0	MONTH	OC1	1ST	1997-12-31	24 hr
435272	5401932	0.03749	367	367	0	MONTH	OC1	1ST	1997-12-31	24 hr
435272	5400932	0.03414	361	361	0	MONTH	OC1	1ST	1997-12-31	24 hr
435272	5399932	0.02544	361	361	0	MONTH	OC1	1ST	1997-12-31	24 hr
436272	5414932	0.0427	395.5	395.5	0	MONTH	OC1	1ST	1998-12-31	24 hr
436272	5413932	0.05154	403	403	0	MONTH	OC1	1ST	1998-12-31	24 hr
436272	5412932	0.06021	391	391	0	MONTH	OC1	1ST	1998-12-31	24 hr
436272	5411932	0.05771	378	378	0	MONTH	OC1	1ST	1998-12-31	24 hr
436272	5410932	0.0617	383	383	0	MONTH	OC1	1ST	1997-12-31	24 hr
436272	5409932	0.053	388.85	401	0	MONTH	OC1	1ST	1998-12-31	24 hr
436272	5408932	0.05471	393.51	393.51	0	MONTH	OC1	1ST	2000-01-31	24 hr
436272	5407932	0.05139	381.28	381.28	0	MONTH	OC1	1ST	1996-01-31	24 hr
436272	5406932	0.0389	383	383	0	MONTH	OC1	1ST	1997-02-28	24 hr
436272	5405932	0.03805	387.2	387.2	0	MONTH	OC1	1ST	2000-01-31	24 hr
436272	5404932	0.03346	387.75	387.75	0	MONTH	OC1	1ST	1996-01-31	24 hr
436272	5403932	0.02874	374.42	374.42	0	MONTH	OC1	1ST	1997-12-31	24 hr
436272	5402932	0.03159	376	376	0	MONTH	OC1	1ST	1997-12-31	24 hr
436272	5401932	0.02814	368	368	0	MONTH	OC1	1ST	1997-12-31	24 hr
436272	5400932	0.02967	370	370	0	MONTH	OC1	1ST	1997-12-31	24 hr
436272	5399932	0.02937	357.67	357.67	0	MONTH	OC1	1ST	1997-12-31	24 hr
437272	5414932	0.03767	361.94	361.94	0	MONTH	OC1	1ST	1998-12-31	24 hr
437272	5413932	0.04618	360	403	0	MONTH	OC1	1ST	1998-12-31	24 hr
437272	5412932	0.0507	369.93	402	0	MONTH	OC1	1ST	1998-12-31	24 hr
437272	5411932	0.04602	369.31	369.31	0	MONTH	OC1	1ST	1998-12-31	24 hr
437272	5410932	0.0508	370.89	370.89	0	MONTH	OC1	1ST	1997-12-31	24 hr
437272	5409932	0.04207	370.33	370.33	0	MONTH	OC1	1ST	1998-12-31	24 hr
437272	5408932	0.04225	374.64	374.64	0	MONTH	OC1	1ST	2000-01-31	24 hr
437272	5407932	0.04708	377	377	0	MONTH	OC1	1ST	1996-01-31	24 hr
437272	5406932	0.03393	381	381	0	MONTH	OC1	1ST	1998-01-31	24 hr
437272	5405932	0.03169	386	386	0	MONTH	OC1	1ST	2000-01-31	24 hr
437272	5404932	0.02951	385.46	385.46	0	MONTH	OC1	1ST	1996-01-31	24 hr
437272	5403932	0.02584	378	378	0	MONTH	OC1	1ST	1996-04-30	24 hr
437272	5402932	0.02407	377	377	0	MONTH	OC1	1ST	1997-12-31	24 hr
437272	5401932	0.02601	369	369	0	MONTH	OC1	1ST	1997-12-31	24 hr
437272	5400932	0.02298	367.59	367.59	0	MONTH	OC1	1ST	1997-12-31	24 hr
437272	5399932	0.02375	363	363	0	MONTH	OC1	1ST	1997-12-31	24 hr

*** THE MAXIMUM 100 24-HR AVERAGE CONCENTRATION VALUES FOR SOURCE GROUP: PAG_HR ***

RANK BY	YEAR	RANK	CONC	YYYYMM	XR	YR	TYPE	Ontario Reg. 419/05
1	1996	18	4.20843	2E+09	429330	5408823	DC	Discarded
1	1997	19	4.1828	2E+09	429102	5408830	DC	Discarded
1	1998	29	4.03874	2E+09	429102	5408830	DC	Discarded
1	1999	1	5.22527	2E+09	429130	5408623	DC	Discarded
1	2000	2	5.22324	2E+09	430530	5409423	DC	Discarded
2	1996	21	4.14543	2E+09	429102	5408830	DC	Discarded
2	1997	23	4.11	2E+09	429130	5408823	DC	Discarded
2	1998	32	3.97796	2E+09	429093	5408498	DC	
2	1999	3	5.22285	2E+09	429128	5408693	DC	Discarded
2	2000	7	4.85537	2E+09	430730	5409423	DC	Discarded
3	1996	22	4.12598	2E+09	429130	5408823	DC	Discarded
3	1997	38	3.86927	2E+09	429128	5408693	DC	Discarded
3	1998	34	3.94626	2E+09	429130	5408823	DC	
3	1999	4	5.16894	2E+09	429093	5408498	DC	Discarded
3	2000	8	4.80257	2E+09	429102	5408830	DC	Highest
4	1996	30	4.03126	2E+09	429425	5408830	DC	Discarded
4	1997	44	3.75695	2E+09	429128	5408693	DC	
4	1998	45	3.75376	2E+09	429130	5408623	DC	
4	1999	5	5.13036	2E+09	429102	5408830	DC	Discarded
4	2000	9	4.74483	2E+09	429130	5408823	DC	
5	1996	42	3.77566	2E+09	430530	5409223	DC	
5	1997	47	3.73822	2E+09	429102	5408830	DC	
5	1998	46	3.74796	2E+09	429128	5408693	DC	
5	1999	6	4.95163	2E+09	429130	5408823	DC	Discarded
5	2000	10	4.72299	2E+09	429425	5408830	DC	
6	1996	67	3.59298	2E+09	429128	5408693	DC	
6	1997	49	3.71884	2E+09	429130	5408623	DC	
6	1998	48	3.73695	2E+09	429102	5408830	DC	
6	1999	14	4.44696	2E+09	429330	5408623	DC	Discarded
6	2000	11	4.72222	2E+09	429330	5408823	DC	
7	1996	73	3.56724	2E+09	429330	5408623	DC	
7	1997	52	3.70966	2E+09	429102	5408830	DC	
7	1998	58	3.65235	2E+09	429128	5408693	DC	
7	1999	15	4.37338	2E+09	429414	5408504	DC	Discarded
7	2000	12	4.68061	2E+09	430530	5409623	DC	
8	1996	78	3.47835	2E+09	430530	5409823	DC	
8	1997	54	3.69606	2E+09	429130	5408623	DC	
8	1998	68	3.58843	2E+09	429130	5408823	DC	
8	1999	16	4.32046	2E+09	429431	5408490	DC	Discarded
8	2000	13	4.6083	2E+09	430795	5409527	DC	
9	1996	90	3.42684	2E+09	430381	5410114	DC	
9	1997	56	3.66053	2E+09	429130	5408823	DC	
9	1998	71	3.56769	2E+09	429330	5408823	DC	
9	1999	20	4.16551	2E+09	429530	5408223	DC	Discarded
9	2000	17	4.29168	2E+09	430930	5409423	DC	
10	1996	97	3.41197	2E+09	429930	5412623	DC	

10	1997	57	3.65751	2E+09	429330	5408823	DC
10	1998	79	3.47823	2E+09	429130	5408623	DC
10	1999	27	4.04978	2E+09	429330	5408823	DC
10	2000	24	4.06934	2E+09	430530	5409823	DC
11	1997	60	3.63731	2E+09	429102	5408830	DC
11	1998	92	3.42452	2E+09	426128	5407693	DC
11	1999	33	3.96407	2E+09	429530	5408423	DC
11	2000	25	4.06453	2E+09	431130	5409423	DC
12	1997	62	3.62623	2E+09	429093	5408498	DC
12	1998	95	3.41438	2E+09	426189	5407696	DC
12	1999	35	3.93745	2E+09	429102	5408830	DC
12	2000	26	4.05794	2E+09	429128	5408693	DC
13	1997	63	3.61535	2E+09	429330	5408623	DC
13	1999	36	3.93611	2E+09	429130	5408823	DC
13	2000	28	4.0495	2E+09	429425	5408830	DC
14	1997	72	3.5674	2E+09	429130	5408823	DC
14	1999	37	3.91181	2E+09	429425	5408830	DC
14	2000	31	3.99759	2E+09	430730	5409623	DC
15	1997	74	3.5571	2E+09	429130	5408823	DC
15	1999	40	3.78477	2E+09	429530	5408023	DC
15	2000	39	3.855	2E+09	429330	5408823	DC
16	1997	85	3.44812	2E+09	429093	5408498	DC
16	1999	84	3.46454	2E+09	429330	5408823	DC
16	2000	41	3.78167	2E+09	429330	5408623	DC
17	1997	100	3.38613	2E+09	429414	5408504	DC
17	1999	91	3.42597	2E+09	430530	5409423	DC
17	2000	43	3.76111	2E+09	429425	5408830	DC
18	1999	93	3.42429	2E+09	429102	5408830	DC
18	2000	50	3.71121	2E+09	429102	5408830	DC
19	2000	51	3.71047	2E+09	429130	5408623	DC
20	2000	53	3.70226	2E+09	427265	5407714	DC
21	2000	55	3.66998	2E+09	427168	5407714	DC
22	2000	59	3.65203	2E+09	429330	5408823	DC
23	2000	61	3.6352	2E+09	429130	5408823	DC
24	2000	64	3.61159	2E+09	427361	5407714	DC
25	2000	65	3.59916	2E+09	427128	5407693	DC
26	2000	66	3.59312	2E+09	430730	5409823	DC
27	2000	69	3.58126	2E+09	427072	5407714	DC
28	2000	70	3.57665	2E+09	430530	5409823	DC
29	2000	75	3.51905	2E+09	430530	5409223	DC
30	2000	76	3.50971	2E+09	430530	5409223	DC
31	2000	77	3.49809	2E+09	430730	5409223	DC
32	2000	80	3.47665	2E+09	427168	5407615	DC
33	2000	81	3.46941	2E+09	427265	5407615	DC
34	2000	82	3.46638	2E+09	429130	5408823	DC
35	2000	83	3.46461	2E+09	429102	5408830	DC
36	2000	86	3.44659	2E+09	429128	5408693	DC
37	2000	87	3.4316	2E+09	429102	5408830	DC
38	2000	88	3.43012	2E+09	427072	5407615	DC

*** THE MAXIMUM 100 1-HR AVERAGE CONCENTRATION VALUES FOR SOURCE GROUP: PIT ***

RANK BY	YEAR	RANK	CONC	YYYYMM	XR	YR	TYPE	Ontario Reg. 419/05
1	1997	5	51.0262	2E+09	424430	5408573	DC	Discarded
1	1999	27	46.9876	2E+09	424480	5408373	DC	Discarded
1	2000	1	52.9489	2E+09	424499	5408579	DC	Discarded
2	1997	7	50.7241	2E+09	424380	5408573	DC	Discarded
2	1999	28	46.9176	2E+09	424480	5408423	DC	Discarded
2	2000	2	52.5893	2E+09	424480	5408573	DC	Discarded
3	1997	8	50.0147	2E+09	424480	5408573	DC	Discarded
3	1999	34	46.3812	2E+09	424480	5408323	DC	Discarded
3	2000	3	51.2556	2E+09	424480	5408523	DC	Discarded
4	1997	10	49.7464	2E+09	424499	5408579	DC	Discarded
4	1999	37	45.9799	2E+09	424480	5408473	DC	Discarded
4	2000	4	51.0645	2E+09	424430	5408573	DC	Discarded
5	1997	11	49.5576	2E+09	424380	5408523	DC	Discarded
5	1999	42	45.4518	2E+09	424430	5408323	DC	Discarded
5	2000	6	50.9966	2E+09	424430	5408523	DC	Discarded
6	1997	15	48.6872	2E+09	424430	5408523	DC	Discarded
6	1999	46	45.1313	2E+09	424430	5408273	DC	Discarded
6	2000	9	49.8731	2E+09	424430	5408473	DC	Discarded
7	1997	19	47.7958	2E+09	424092	5408569	DC	Discarded
7	1999	47	45.1022	2E+09	424480	5408273	DC	Discarded
7	2000	12	49.4308	2E+09	424380	5408473	DC	Discarded
8	1997	20	47.7049	2E+09	424284	5408471	DC	Discarded
8	1999	50	45.0479	2E+09	424430	5408373	DC	Discarded
8	2000	13	49.3524	2E+09	424380	5408523	DC	Discarded
9	1997	22	47.4231	2E+09	423995	5408569	DC	Discarded
9	1999	61	44.2906	2E+09	424480	5408523	DC	Discarded
9	2000	14	48.9825	2E+09	424480	5408473	DC	Discarded
10	1997	23	47.3845	2E+09	424380	5408473	DC	Discarded
10	1999	68	43.9822	2E+09	424430	5408423	DC	Discarded
10	2000	16	48.5904	2E+09	424380	5408423	DC	Discarded
11	1997	24	47.178	2E+09	424480	5408373	DC	Discarded
11	1999	71	43.9206	2E+09	424380	5408273	DC	Discarded
11	2000	17	48.173	2E+09	424380	5408573	DC	Discarded
12	1997	25	47.1181	2E+09	424480	5408423	DC	Discarded
12	1999	79	43.3783	2E+09	424499	5408579	DC	Discarded
12	2000	18	47.9077	2E+09	424430	5408423	DC	Discarded
13	1997	26	47.0067	2E+09	424092	5408569	DC	Discarded
13	1999	80	43.2977	2E+09	424380	5408323	DC	Discarded
13	2000	21	47.6322	2E+09	424328	5408393	DC	Discarded
14	1997	30	46.6874	2E+09	424284	5408569	DC	Discarded
14	1999	83	42.9756	2E+09	424413	5408177	DC	Discarded
14	2000	29	46.8355	2E+09	424380	5408373	DC	Discarded
15	1997	32	46.6199	2E+09	424480	5408523	DC	Discarded
15	1999	99	42.4459	2E+09	424328	5408193	DC	Discarded
15	2000	31	46.6487	2E+09	424284	5408372	DC	Discarded
16	1997	33	46.5637	2E+09	424480	5408323	DC	Discarded

16	2000	36	45.9876	2E+09	424480	5408423	DC	Discarded
17	1997	35	46.1964	2E+09	424480	5408473	DC	Discarded
17	2000	49	45.0685	2E+09	424430	5408373	DC	Discarded
18	1997	38	45.8898	2E+09	423995	5408569	DC	Discarded
18	2000	51	45.0425	2E+09	424284	5408471	DC	Discarded
19	1997	39	45.7794	2E+09	424188	5408569	DC	Discarded
19	2000	52	45.0274	2E+09	423899	5408569	DC	Discarded
20	1997	40	45.6307	2E+09	424430	5408323	DC	Discarded
20	2000	57	44.6023	2E+09	424284	5408273	DC	Discarded
21	1997	41	45.4926	2E+09	424430	5408473	DC	Discarded
21	2000	62	44.247	2E+09	424380	5408323	DC	Discarded
22	1997	43	45.3009	2E+09	424430	5408273	DC	Discarded
22	2000	69	43.9695	2E+09	424188	5408273	DC	Discarded
23	1997	44	45.285	2E+09	424480	5408273	DC	Discarded
23	2000	77	43.4702	2E+09	423803	5408569	DC	Discarded
24	1997	45	45.2372	2E+09	424430	5408373	DC	Discarded
24	2000	78	43.4457	2E+09	423995	5408569	DC	Discarded
25	1997	48	45.0773	2E+09	423995	5408471	DC	Discarded
25	2000	98	42.4576	2E+09	424128	5408193	DC	Discarded
26	1997	53	45.0186	2E+09	424188	5408372	DC	Discarded
27	1997	54	44.9735	2E+09	423899	5408471	DC	Discarded
28	1997	55	44.8643	2E+09	424284	5408372	DC	Discarded
29	1997	56	44.6663	2E+09	424328	5408393	DC	Discarded
30	1997	58	44.5229	2E+09	424480	5408523	DC	Discarded
31	1997	59	44.4626	2E+09	424380	5408423	DC	Discarded
32	1997	60	44.461	2E+09	423899	5408569	DC	Discarded
33	1997	63	44.187	2E+09	424430	5408423	DC	Discarded
34	1997	64	44.1518	2E+09	424499	5408579	DC	Discarded
35	1997	65	44.0934	2E+09	424380	5408273	DC	Discarded
36	1997	66	44.0817	2E+09	424480	5408573	DC	Discarded
37	1997	67	44.0494	2E+09	423899	5408569	DC	Discarded
38	1997	70	43.9642	2E+09	423899	5408471	DC	Discarded
39	1997	72	43.8933	2E+09	424188	5408471	DC	Discarded
40	1997	73	43.8603	2E+09	423995	5408471	DC	Discarded
41	1997	74	43.8105	2E+09	424430	5408573	DC	Discarded
42	1997	75	43.6284	2E+09	424499	5408579	DC	Discarded
43	1997	76	43.4782	2E+09	424380	5408323	DC	Discarded
44	1997	81	43.1408	2E+09	424413	5408177	DC	Discarded
45	1997	82	42.9809	2E+09	424188	5408569	DC	Discarded
46	1997	84	42.9291	2E+09	423928	5408393	DC	Discarded
47	1997	85	42.8911	2E+09	423803	5408471	DC	Discarded
48	1997	86	42.7531	2E+09	424128	5408393	DC	Discarded
49	1997	87	42.7456	2E+09	424430	5408523	DC	Discarded
50	1997	88	42.7248	2E+09	424092	5408471	DC	Discarded
51	1997	89	42.6571	2E+09	423995	5408569	DC	Discarded
52	1997	90	42.6327	2E+09	424092	5408273	DC	Discarded
53	1997	91	42.6015	2E+09	424328	5408193	DC	Discarded
54	1997	92	42.5791	2E+09	424188	5408273	DC	Discarded
55	1997	93	42.5771	2E+09	424480	5408473	DC	Discarded

*** THE MAXIMUM 100 24-HR AVERAGE CONCENTRATION VALUES FOR SOURCE GROUP: PIT ***

RANK BY	YEAR	RANK	CONC	YYYYMM	XR	YR	TYPE	Ontario Reg. 419/05
1	1998	5	5.75728	2E+09	423128	5408593	DC	Discarded
1	1999	1	6.10058	2E+09	425893	5407696	DC	Discarded
1	2000	57	4.93841	2E+09	424380	5408573	DC	Discarded
2	1998	6	5.74721	2E+09	424480	5408323	DC	Highest
2	1999	2	6.01077	2E+09	425992	5407696	DC	Discarded
2	2000	59	4.91661	2E+09	424430	5408573	DC	Discarded
3	1998	7	5.74025	2E+09	424480	5408373	DC	
3	1999	3	5.85146	2E+09	425893	5407600	DC	Discarded
3	2000	66	4.85569	2E+09	425276	5407752	DC	
4	1998	8	5.69382	2E+09	424480	5408273	DC	
4	1999	4	5.8384	2E+09	425992	5407600	DC	Discarded
4	2000	71	4.82436	2E+09	424480	5408573	DC	
5	1998	9	5.67334	2E+09	424480	5408423	DC	
5	1999	10	5.64737	2E+09	425992	5407504	DC	Discarded
5	2000	72	4.81498	2E+09	424499	5408579	DC	
6	1998	11	5.63095	2E+09	423130	5408569	DC	
6	1999	12	5.6246	2E+09	425893	5407504	DC	Discarded
6	2000	75	4.7988	2E+09	424284	5408569	DC	
7	1998	13	5.61411	2E+09	423328	5408593	DC	
7	1999	15	5.55941	2E+09	425794	5407696	DC	Discarded
7	2000	85	4.75205	2E+09	423418	5408569	DC	
8	1998	14	5.56789	2E+09	423226	5408569	DC	
8	1999	21	5.41484	2E+09	425992	5407408	DC	Discarded
8	2000	93	4.71372	2E+09	423515	5408569	DC	
9	1998	16	5.53115	2E+09	424480	5408473	DC	
9	1999	22	5.40279	2E+09	426068	5407740	DC	Discarded
9	2000	94	4.71017	2E+09	424380	5408523	DC	
10	1998	17	5.51349	2E+09	422928	5408593	DC	
10	1999	23	5.3884	2E+09	425893	5407408	DC	Discarded
10	2000	97	4.6957	2E+09	423328	5408593	DC	
11	1998	18	5.50591	2E+09	424430	5408273	DC	
11	1999	27	5.32124	2E+09	425794	5407600	DC	Discarded
12	1998	19	5.47487	2E+09	424430	5408323	DC	
12	1999	32	5.20682	2E+09	425992	5407312	DC	Discarded
13	1998	20	5.4288	2E+09	423322	5408569	DC	
13	1999	33	5.17419	2E+09	425893	5407312	DC	Discarded
14	1998	24	5.38216	2E+09	424430	5408373	DC	
14	1999	36	5.10411	2E+09	425794	5407504	DC	Discarded
15	1998	25	5.36851	2E+09	424413	5408177	DC	
15	1999	37	5.05899	2E+09	426091	5407600	DC	Discarded
16	1998	26	5.32404	2E+09	424480	5408523	DC	
16	1999	40	5.03379	2E+09	424499	5408579	DC	
17	1998	28	5.24528	2E+09	424499	5408579	DC	
17	1999	41	5.01745	2E+09	425992	5407216	DC	
18	1998	29	5.23656	2E+09	423418	5408569	DC	
18	1999	43	5.01255	2E+09	426091	5407504	DC	

19	1998	30	5.23337	2E+09	424430	5408423	DC
19	1999	48	4.98312	2E+09	425893	5407216	DC
20	1998	31	5.22161	2E+09	424380	5408273	DC
20	1999	49	4.98264	2E+09	426091	5407696	DC
21	1998	34	5.13565	2E+09	424413	5408081	DC
21	1999	54	4.95191	2E+09	424480	5408573	DC
22	1998	35	5.11303	2E+09	424380	5408323	DC
22	1999	65	4.8805	2E+09	425794	5407408	DC
23	1998	38	5.05608	2E+09	426485	5407696	DC
23	1999	67	4.84461	2E+09	426091	5407408	DC
24	1998	39	5.04924	2E+09	424480	5408573	DC
24	1999	68	4.83942	2E+09	424480	5408523	DC
25	1998	42	5.01356	2E+09	424430	5408473	DC
25	1999	69	4.83544	2E+09	425992	5407119	DC
26	1998	44	5.00977	2E+09	424328	5408193	DC
26	1999	74	4.8011	2E+09	425893	5407119	DC
27	1998	45	5.00599	2E+09	423515	5408569	DC
27	1999	76	4.79063	2E+09	424499	5408579	DC
28	1998	46	4.99241	2E+09	424480	5408423	DC
28	1999	79	4.77075	2E+09	424430	5408573	DC
29	1998	47	4.98353	2E+09	423130	5408471	DC
29	1999	92	4.72464	2E+09	424480	5408473	DC
30	1998	50	4.97842	2E+09	424314	5408081	DC
30	1999	95	4.70535	2E+09	424480	5408573	DC
31	1998	51	4.96945	2E+09	422728	5408593	DC
31	1999	98	4.68945	2E+09	426091	5407312	DC
32	1998	52	4.96935	2E+09	424480	5408473	DC
32	1999	99	4.68712	2E+09	425794	5407312	DC
33	1998	53	4.95755	2E+09	424480	5408373	DC
33	1999	100	4.67035	2E+09	424430	5408523	DC
34	1998	55	4.95113	2E+09	424380	5408373	DC
35	1998	56	4.94823	2E+09	424314	5408177	DC
36	1998	58	4.93748	2E+09	426584	5407696	DC
37	1998	60	4.89831	2E+09	422930	5408423	DC
38	1998	61	4.89363	2E+09	424480	5408523	DC
39	1998	62	4.89236	2E+09	424499	5408579	DC
40	1998	63	4.88464	2E+09	424480	5408323	DC
41	1998	64	4.88182	2E+09	422730	5408423	DC
42	1998	70	4.8351	2E+09	424314	5407985	DC
43	1998	73	4.80925	2E+09	423226	5408471	DC
44	1998	77	4.78968	2E+09	422728	5408393	DC
45	1998	78	4.77568	2E+09	424480	5408273	DC
46	1998	80	4.76341	2E+09	424413	5407985	DC
47	1998	81	4.7605	2E+09	423611	5408569	DC
48	1998	82	4.75971	2E+09	426584	5407600	DC
49	1998	83	4.75438	2E+09	424480	5408573	DC
50	1998	84	4.75288	2E+09	426485	5407600	DC
51	1998	86	4.7508	2E+09	424430	5408373	DC
52	1998	87	4.73899	2E+09	424430	5408523	DC

Discrete F	X	Y	Concentr	Elevation	Hill Heigh	Flagpole (	Averagin	Source Gr	Num Year	Net ID
	424499	5408579	0.26814	348	348	0	ANNUAL	PIT	5	
MINE	424480	5408573	0.26459	348	348	0	ANNUAL	PIT	5	
MINE	424430	5408573	0.2583	348	348	0	ANNUAL	PIT	5	
MINE	424480	5408523	0.25572	348.55	348.55	0	ANNUAL	PIT	5	
MINE	424380	5408573	0.25223	348	348	0	ANNUAL	PIT	5	
MINE	424430	5408523	0.24979	348.58	348.58	0	ANNUAL	PIT	5	
MINE	424480	5408473	0.24726	349	349	0	ANNUAL	PIT	5	
MINE	424380	5408523	0.24397	348.61	348.61	0	ANNUAL	PIT	5	
MINE	424430	5408473	0.24173	349	349	0	ANNUAL	PIT	5	
MINE	424284	5408569	0.24078	347.79	347.79	0	ANNUAL	PIT	5	
MINE	424480	5408423	0.2393	349.87	349.87	0	ANNUAL	PIT	5	
MINE	424380	5408473	0.23619	349	349	0	ANNUAL	PIT	5	
MINE	424430	5408423	0.23424	350	350	0	ANNUAL	PIT	5	
MINE	424480	5408373	0.23143	350	350	0	ANNUAL	PIT	5	
MINE	424188	5408569	0.23136	347.04	347.04	0	ANNUAL	PIT	5	
MINE	424380	5408423	0.22904	350	350	0	ANNUAL	PIT	5	
MINE	424430	5408373	0.22681	350.05	350.05	0	ANNUAL	PIT	5	
MINE	424284	5408471	0.22563	349	349	0	ANNUAL	PIT	5	
MINE	424480	5408323	0.22396	350.68	350.68	0	ANNUAL	PIT	5	
MINE	424092	5408569	0.22379	347.79	347.79	0	ANNUAL	PIT	5	
MINE	424380	5408373	0.22221	351	351	0	ANNUAL	PIT	5	
MINE	424430	5408323	0.21988	351	351	0	ANNUAL	PIT	5	
TMA	424328	5408393	0.21962	350.25	350.25	0	ANNUAL	PIT	5	
MINE	423995	5408569	0.21693	347.85	347.85	0	ANNUAL	PIT	5	
MINE	424480	5408273	0.2167	351.34	351.34	0	ANNUAL	PIT	5	
MINE	424188	5408471	0.21656	349	349	0	ANNUAL	PIT	5	
MINE	424380	5408323	0.21552	351.24	351.24	0	ANNUAL	PIT	5	
MINE	424430	5408273	0.21314	352	352	0	ANNUAL	PIT	5	
MINE	424284	5408372	0.21265	351	351	0	ANNUAL	PIT	5	
MINE	423899	5408569	0.21079	348.73	348.73	0	ANNUAL	PIT	5	
MINE	424380	5408273	0.20922	352.4	352.4	0	ANNUAL	PIT	5	
MINE	424092	5408471	0.20904	350	350	0	ANNUAL	PIT	5	
MINE	423803	5408569	0.20486	349.96	349.96	0	ANNUAL	PIT	5	
MINE	424188	5408372	0.20369	350.26	350.26	0	ANNUAL	PIT	5	
MINE	423995	5408471	0.20254	350.49	350.49	0	ANNUAL	PIT	5	
TMA	424128	5408393	0.2014	350.25	350.25	0	ANNUAL	PIT	5	
MINE	424284	5408273	0.20104	352.46	352.46	0	ANNUAL	PIT	5	
MINE	424413	5408177	0.19957	354	354	0	ANNUAL	PIT	5	
MINE	423707	5408569	0.19862	350.01	350.01	0	ANNUAL	PIT	5	
	426917	5407750	0.19852	351.89	351.89	0	ANNUAL	PIT	5	
MINE	423899	5408471	0.19686	351.16	351.16	0	ANNUAL	PIT	5	
MINE	424092	5408372	0.19605	351.02	351.02	0	ANNUAL	PIT	5	
TMA	424328	5408193	0.19569	353.95	353.95	0	ANNUAL	PIT	5	
MINE	427168	5407714	0.19537	351	351	0	ANNUAL	PIT	5	
MINE	427265	5407714	0.19522	354.98	354.98	0	ANNUAL	PIT	5	
MINE	427072	5407714	0.19483	350	350	0	ANNUAL	PIT	5	
MINE	426976	5407714	0.19377	350	350	0	ANNUAL	PIT	5	
MINE	427361	5407714	0.19365	358.39	358.39	0	ANNUAL	PIT	5	

MINE	424314	5408177	0.19288	354	354	0	ANNUAL	PIT	5
MINE	424188	5408273	0.19271	352	352	0	ANNUAL	PIT	5
TMA	427128	5407693	0.19227	350	350	0	ANNUAL	PIT	5
MINE	423611	5408569	0.19221	350	350	0	ANNUAL	PIT	5
MINE	423803	5408471	0.19167	352.21	352.21	0	ANNUAL	PIT	5
MINE	427457	5407714	0.19093	361	361	0	ANNUAL	PIT	5
MINE	426880	5407696	0.19011	353.15	353.15	0	ANNUAL	PIT	5
MINE	423995	5408372	0.18966	352.59	352.59	0	ANNUAL	PIT	5
MINE	426781	5407696	0.18867	356	356	0	ANNUAL	PIT	5
TMA	423928	5408393	0.18842	353.49	353.49	0	ANNUAL	PIT	5
MINE	424413	5408081	0.18769	356	356	0	ANNUAL	PIT	5
MINE	427553	5407714	0.18762	362	362	0	ANNUAL	PIT	5
MINE	426683	5407696	0.18699	359.06	359.06	0	ANNUAL	PIT	5
MINE	423707	5408471	0.18654	352.27	352.27	0	ANNUAL	PIT	5
TMA	426628	5407693	0.18563	360.15	360.15	0	ANNUAL	PIT	5
MINE	423515	5408569	0.18553	350	350	0	ANNUAL	PIT	5
	425276	5407752	0.18544	361	361	0	ANNUAL	PIT	5
MINE	424216	5408177	0.18538	354	354	0	ANNUAL	PIT	5
MINE	424092	5408273	0.18516	353	353	0	ANNUAL	PIT	5
MINE	426584	5407696	0.18507	361.53	361.53	0	ANNUAL	PIT	5
MINE	423899	5408372	0.18424	355.06	355.06	0	ANNUAL	PIT	5
MINE	427649	5407714	0.18315	364.04	364.04	0	ANNUAL	PIT	5
MINE	427265	5407615	0.18264	352.85	352.85	0	ANNUAL	PIT	5
	427700	5407741	0.18257	366	366	0	ANNUAL	PIT	5
MINE	425498	5407696	0.18254	360	360	0	ANNUAL	PIT	5
MINE	424314	5408081	0.18252	355.75	355.75	0	ANNUAL	PIT	5
TMA	427628	5407693	0.18232	363	363	0	ANNUAL	PIT	5
MINE	427168	5407615	0.18226	350	350	0	ANNUAL	PIT	5
MINE	426485	5407696	0.18225	365.1	365.1	0	ANNUAL	PIT	5
MINE	427361	5407615	0.18204	356.25	356.25	0	ANNUAL	PIT	5
MINE	425400	5407696	0.1819	361	361	0	ANNUAL	PIT	5
MINE	427072	5407615	0.18149	350	350	0	ANNUAL	PIT	5
MINE	425597	5407696	0.18149	358.97	358.97	0	ANNUAL	PIT	5
MINE	423611	5408471	0.1813	351.33	351.33	0	ANNUAL	PIT	5
	427720	5407741	0.18125	366.75	366.75	0	ANNUAL	PIT	5
MINE	426976	5407615	0.18035	350.8	350.8	0	ANNUAL	PIT	5
TMA	425628	5407693	0.18031	361	361	0	ANNUAL	PIT	5
MINE	427457	5407615	0.18025	358.98	358.98	0	ANNUAL	PIT	5
MINE	425301	5407696	0.18011	361.78	361.78	0	ANNUAL	PIT	5
TMA	424128	5408193	0.1801	354	354	0	ANNUAL	PIT	5
MINE	423803	5408372	0.1793	357.44	357.44	0	ANNUAL	PIT	5
MINE	423995	5408273	0.17858	354.72	354.72	0	ANNUAL	PIT	5
MINE	423418	5408569	0.17858	350	350	0	ANNUAL	PIT	5
TMA	423728	5408393	0.17835	355.6	355.6	0	ANNUAL	PIT	5
MINE	425696	5407696	0.17822	364.24	364.24	0	ANNUAL	PIT	5
MINE	426387	5407696	0.17777	368.41	368.41	0	ANNUAL	PIT	5
MINE	424117	5408177	0.17776	354	354	0	ANNUAL	PIT	5
MINE	427553	5407615	0.17764	360	360	0	ANNUAL	PIT	5
MINE	426880	5407600	0.17727	354.09	354.09	0	ANNUAL	PIT	5

Discrete F	X	Y	Concentr	Elevation	Hill Heigh	Flagpole (	Averagin	Source Gr	Rank	Net ID
	425276	5407752	0.85089	361	361	0	MONTH	PIT	1ST	
	424499	5408579	0.83899	348	348	0	MONTH	PIT	1ST	
MINE	425301	5407696	0.83143	361.78	361.78	0	MONTH	PIT	1ST	
MINE	424480	5408573	0.82943	348	348	0	MONTH	PIT	1ST	
MINE	425400	5407696	0.82441	361	361	0	MONTH	PIT	1ST	
MINE	424430	5408573	0.81096	348	348	0	MONTH	PIT	1ST	
MINE	425498	5407696	0.80396	360	360	0	MONTH	PIT	1ST	
MINE	424480	5408523	0.80139	348.55	348.55	0	MONTH	PIT	1ST	
MINE	424380	5408573	0.7893	348	348	0	MONTH	PIT	1ST	
MINE	424430	5408523	0.78702	348.58	348.58	0	MONTH	PIT	1ST	
MINE	425301	5407600	0.78315	363	363	0	MONTH	PIT	1ST	
MINE	425400	5407600	0.78106	361.98	361.98	0	MONTH	PIT	1ST	
MINE	424480	5408473	0.77239	349	349	0	MONTH	PIT	1ST	
MINE	424380	5408523	0.76874	348.61	348.61	0	MONTH	PIT	1ST	
MINE	425597	5407696	0.76615	358.97	358.97	0	MONTH	PIT	1ST	
MINE	424430	5408473	0.76206	349	349	0	MONTH	PIT	1ST	
MINE	425498	5407600	0.75276	360.32	360.32	0	MONTH	PIT	1ST	
TMA	425628	5407693	0.74926	361	361	0	MONTH	PIT	1ST	
MINE	424380	5408473	0.74735	349	349	0	MONTH	PIT	1ST	
MINE	424480	5408423	0.74339	349.87	349.87	0	MONTH	PIT	1ST	
MINE	424284	5408569	0.74235	347.79	347.79	0	MONTH	PIT	1ST	
MINE	425301	5407504	0.73869	365.07	365.07	0	MONTH	PIT	1ST	
MINE	424430	5408423	0.73715	350	350	0	MONTH	PIT	1ST	
MINE	425400	5407504	0.73559	363.01	363.01	0	MONTH	PIT	1ST	
MINE	424380	5408423	0.72613	350	350	0	MONTH	PIT	1ST	
MINE	425597	5407600	0.71646	359.06	359.06	0	MONTH	PIT	1ST	
MINE	425696	5407696	0.71519	364.24	364.24	0	MONTH	PIT	1ST	
MINE	424480	5408373	0.71284	350	350	0	MONTH	PIT	1ST	
MINE	424430	5408373	0.71017	350.05	350.05	0	MONTH	PIT	1ST	
MINE	424284	5408471	0.70985	349	349	0	MONTH	PIT	1ST	
MINE	425498	5407504	0.70637	361	361	0	MONTH	PIT	1ST	
MINE	424380	5408373	0.70399	351	351	0	MONTH	PIT	1ST	
TMA	424328	5408393	0.699	350.25	350.25	0	MONTH	PIT	1ST	
MINE	424188	5408569	0.69834	347.04	347.04	0	MONTH	PIT	1ST	
MINE	425301	5407408	0.69667	367.23	367.23	0	MONTH	PIT	1ST	
MINE	425400	5407408	0.69405	365.12	365.12	0	MONTH	PIT	1ST	
MINE	424430	5408323	0.68369	351	351	0	MONTH	PIT	1ST	
MINE	424480	5408323	0.68271	350.68	350.68	0	MONTH	PIT	1ST	
MINE	424380	5408323	0.68016	351.24	351.24	0	MONTH	PIT	1ST	
MINE	424284	5408372	0.67805	351	351	0	MONTH	PIT	1ST	
MINE	425597	5407504	0.67134	360	360	0	MONTH	PIT	1ST	
MINE	425498	5407408	0.67072	362.32	362.32	0	MONTH	PIT	1ST	
MINE	424188	5408471	0.66988	349	349	0	MONTH	PIT	1ST	
MINE	424480	5408273	0.66979	351.34	351.34	0	MONTH	PIT	1ST	
MINE	425696	5407600	0.66755	364.51	364.51	0	MONTH	PIT	1ST	
MINE	424092	5408569	0.6621	347.79	347.79	0	MONTH	PIT	1ST	
MINE	425301	5407312	0.65798	369	369	0	MONTH	PIT	1ST	
MINE	424430	5408273	0.65658	352	352	0	MONTH	PIT	1ST	

MINE	424380	5408273	0.65645	352.4	352.4	0	MONTH	PIT	1ST
MINE	425400	5407312	0.65512	367.19	367.19	0	MONTH	PIT	1ST
MINE	424284	5408273	0.64365	352.46	352.46	0	MONTH	PIT	1ST
MINE	425794	5407696	0.64301	368	368	0	MONTH	PIT	1ST
MINE	424188	5408372	0.64296	350.26	350.26	0	MONTH	PIT	1ST
MINE	424092	5408471	0.63408	350	350	0	MONTH	PIT	1ST
MINE	425597	5407408	0.63339	361.05	361.05	0	MONTH	PIT	1ST
MINE	425498	5407312	0.63339	364.04	364.04	0	MONTH	PIT	1ST
MINE	423995	5408569	0.62959	347.85	347.85	0	MONTH	PIT	1ST
TMA	424128	5408393	0.62622	350.25	350.25	0	MONTH	PIT	1ST
MINE	425696	5407504	0.6253	363.59	363.59	0	MONTH	PIT	1ST
MINE	425301	5407216	0.62321	370	370	0	MONTH	PIT	1ST
MINE	424413	5408177	0.62188	354	354	0	MONTH	PIT	1ST
MINE	425400	5407216	0.61914	368.74	368.74	0	MONTH	PIT	1ST
MINE	424188	5408273	0.61745	352	352	0	MONTH	PIT	1ST
TMA	424328	5408193	0.61683	353.95	353.95	0	MONTH	PIT	1ST
MINE	424314	5408177	0.60912	354	354	0	MONTH	PIT	1ST
MINE	424092	5408372	0.60805	351.02	351.02	0	MONTH	PIT	1ST
MINE	424413	5408081	0.60291	356	356	0	MONTH	PIT	1ST
MINE	423995	5408471	0.60278	350.49	350.49	0	MONTH	PIT	1ST
MINE	427553	5407714	0.60219	362	362	0	MONTH	PIT	1ST
MINE	423899	5408569	0.60075	348.73	348.73	0	MONTH	PIT	1ST
MINE	425498	5407216	0.59855	365.06	365.06	0	MONTH	PIT	1ST
MINE	424216	5408177	0.59737	354	354	0	MONTH	PIT	1ST
MINE	425597	5407312	0.59703	363	363	0	MONTH	PIT	1ST
MINE	425794	5407600	0.59693	369	369	0	MONTH	PIT	1ST
MINE	427457	5407714	0.5956	361	361	0	MONTH	PIT	1ST
MINE	425301	5407119	0.59245	370	370	0	MONTH	PIT	1ST
MINE	427649	5407714	0.58963	364.04	364.04	0	MONTH	PIT	1ST
TMA	427628	5407693	0.5885	363	363	0	MONTH	PIT	1ST
MINE	425696	5407408	0.5865	362.68	362.68	0	MONTH	PIT	1ST
MINE	425400	5407119	0.58618	369.79	369.79	0	MONTH	PIT	1ST
MINE	427361	5407714	0.5859	358.39	358.39	0	MONTH	PIT	1ST
MINE	424092	5408273	0.58582	353	353	0	MONTH	PIT	1ST
TMA	424128	5408193	0.57987	354	354	0	MONTH	PIT	1ST
	427700	5407741	0.57909	366	366	0	MONTH	PIT	1ST
MINE	424413	5407985	0.5778	358	358	0	MONTH	PIT	1ST
MINE	423995	5408372	0.57732	352.59	352.59	0	MONTH	PIT	1ST
MINE	423899	5408471	0.57545	351.16	351.16	0	MONTH	PIT	1ST
MINE	423803	5408569	0.57377	349.96	349.96	0	MONTH	PIT	1ST
MINE	424117	5408177	0.57283	354	354	0	MONTH	PIT	1ST
	427720	5407741	0.57125	366.75	366.75	0	MONTH	PIT	1ST
MINE	427265	5407714	0.57033	354.98	354.98	0	MONTH	PIT	1ST
MINE	425498	5407119	0.5662	366	366	0	MONTH	PIT	1ST
MINE	424314	5408081	0.56564	355.75	355.75	0	MONTH	PIT	1ST
MINE	424216	5408081	0.56495	355	355	0	MONTH	PIT	1ST
MINE	427649	5407615	0.56485	362.25	362.25	0	MONTH	PIT	1ST
PINEGEN	425489	5407106	0.56473	366.67	366.67	0	MONTH	PIT	1ST
MINE	425301	5407023	0.56427	370	370	0	MONTH	PIT	1ST

*** THE MAXIMUM 100 1-HR AVERAGE CONCENTRATION VALUES FOR SOURCE GROUP: PORT1 ***

RANK BY	YEAR	RANK	CONC	YYYYMM	XR	YR	TYPE	Ontario Reg. 419/05
1	1996	4	32.0717	2E+09	428930	5413023	DC	Discarded
1	1997	10	29.3756	2E+09	427361	5407714	DC	Discarded
1	1998	1	44.7687	2E+09	429130	5408823	DC	Discarded
1	1999	18	27.7213	2E+09	427720	5407741	DC	Discarded
1	2000	11	29.1194	2E+09	426091	5407696	DC	Discarded
2	1996	6	31.0036	2E+09	428930	5412823	DC	Discarded
2	1997	23	27.156	2E+09	427361	5407615	DC	Discarded
2	1998	2	44.5924	2E+09	429102	5408830	DC	Discarded
2	1999	25	27.0107	2E+09	427700	5407741	DC	Discarded
2	2000	12	29.0436	2E+09	426128	5407693	DC	Discarded
3	1996	20	27.6082	2E+09	429130	5413223	DC	Discarded
3	1997	33	25.5711	2E+09	427457	5407615	DC	Discarded
3	1998	3	33.2081	2E+09	429330	5408823	DC	Discarded
3	1999	42	24.5728	2E+09	427842	5407517	DC	Discarded
3	2000	13	28.9977	2E+09	426880	5407696	DC	Discarded
4	1996	22	27.5186	2E+09	429128	5413193	DC	Discarded
4	1997	38	25.2144	2E+09	427457	5407517	DC	Discarded
4	1998	5	31.2058	2E+09	428128	5414193	DC	Discarded
4	1999	63	23.4677	2E+09	429730	5412623	DC	Discarded
4	2000	14	28.6061	2E+09	426068	5407740	DC	Discarded
5	1996	100	21.5252	2E+09	429130	5413023	DC	Discarded
5	1997	39	25.1088	2E+09	427457	5407714	DC	Discarded
5	1998	7	30.7972	2E+09	429730	5412623	DC	Discarded
5	1999	76	22.7246	2E+09	427718	5407601	DC	Discarded
5	2000	16	28.3132	2E+09	426781	5407696	DC	Discarded
6	1997	43	24.5427	2E+09	427361	5407517	DC	Discarded
6	1998	8	30.2828	2E+09	428130	5414223	DC	Discarded
6	1999	78	22.6388	2E+09	427649	5407714	DC	Discarded
6	2000	19	27.6586	2E+09	426880	5407600	DC	Discarded
7	1997	47	24.3735	2E+09	427265	5407714	DC	Discarded
7	1998	9	29.4758	2E+09	427168	5407714	DC	Discarded
7	1999	80	22.621	2E+09	427938	5407418	DC	Discarded
7	2000	21	27.5935	2E+09	426091	5407600	DC	Discarded
8	1997	50	24.2735	2E+09	427457	5407418	DC	Discarded
8	1998	15	28.5284	2E+09	427128	5407693	DC	Discarded
8	1999	84	22.4899	2E+09	427842	5407418	DC	Discarded
8	2000	26	26.9779	2E+09	426917	5407750	DC	Discarded
9	1997	60	23.5091	2E+09	429128	5408693	DC	Discarded
9	1998	17	27.7752	2E+09	427168	5407615	DC	Discarded
9	1999	87	22.1075	2E+09	429530	5412623	DC	Discarded
9	2000	27	26.702	2E+09	426781	5407600	DC	Discarded
10	1997	70	23.0022	2E+09	427457	5407319	DC	Discarded
10	1998	24	27.0385	2E+09	428817	5414150	DC	Discarded
10	1999	88	22.0997	2E+09	427938	5407517	DC	Discarded
10	2000	28	26.4611	2E+09	426880	5407504	DC	Discarded
11	1997	81	22.6112	2E+09	429130	5408623	DC	Discarded

11	1998	30	26.0376	2E+09	427168	5407517	DC	Discarded
11	1999	91	21.9764	2E+09	427938	5407319	DC	Discarded
11	2000	29	26.076	2E+09	426189	5407696	DC	Discarded
12	1997	94	21.8686	2E+09	427361	5407418	DC	Discarded
12	1998	32	25.6335	2E+09	427072	5407714	DC	Discarded
12	2000	31	25.7405	2E+09	425628	5407693	DC	Discarded
13	1997	99	21.5311	2E+09	427457	5407221	DC	Discarded
13	1998	41	24.6292	2E+09	429930	5412623	DC	Discarded
13	2000	34	25.513	2E+09	425696	5407696	DC	Discarded
14	1998	46	24.4012	2E+09	429930	5412823	DC	Discarded
14	2000	35	25.4765	2E+09	426091	5407504	DC	Discarded
15	1998	49	24.3145	2E+09	429425	5408830	DC	Discarded
15	2000	36	25.3381	2E+09	426880	5407408	DC	Discarded
16	1998	51	24.2274	2E+09	427168	5407418	DC	Discarded
16	2000	37	25.2555	2E+09	426781	5407504	DC	Discarded
17	1998	54	24.0711	2E+09	427265	5407615	DC	Discarded
17	2000	40	24.7592	2E+09	425597	5407696	DC	Discarded
18	1998	55	23.9724	2E+09	427265	5407517	DC	Discarded
18	2000	44	24.4641	2E+09	425992	5407504	DC	Discarded
19	1998	57	23.8408	2E+09	425992	5407696	DC	Discarded
19	2000	45	24.4125	2E+09	425597	5407600	DC	Discarded
20	1998	58	23.8064	2E+09	427265	5407714	DC	Discarded
20	2000	48	24.3377	2E+09	426880	5407312	DC	Discarded
21	1998	59	23.61	2E+09	427265	5407418	DC	Discarded
21	2000	52	24.1621	2E+09	425992	5407408	DC	Discarded
22	1998	61	23.5091	2E+09	429128	5408693	DC	Discarded
22	2000	53	24.1277	2E+09	425992	5407600	DC	Discarded
23	1998	62	23.5005	2E+09	429128	5408693	DC	Discarded
23	2000	56	23.9403	2E+09	426781	5407408	DC	Discarded
24	1998	66	23.2248	2E+09	427265	5407319	DC	Discarded
24	2000	64	23.3859	2E+09	426880	5407216	DC	Discarded
25	1998	72	22.9415	2E+09	427072	5407615	DC	Discarded
25	2000	65	23.3325	2E+09	425992	5407312	DC	Discarded
26	1998	75	22.7486	2E+09	427168	5407319	DC	Discarded
26	2000	67	23.11	2E+09	426091	5407408	DC	Discarded
27	1998	77	22.6804	2E+09	427265	5407221	DC	Discarded
27	2000	68	23.0311	2E+09	425730	5406423	DC	Discarded
28	1998	82	22.6112	2E+09	429130	5408623	DC	Discarded
28	2000	69	23.0038	2E+09	425992	5407696	DC	Discarded
29	1998	83	22.5772	2E+09	426068	5407740	DC	Discarded
29	2000	71	22.9786	2E+09	425276	5407752	DC	Discarded
30	1998	93	21.8866	2E+09	425992	5407600	DC	Discarded
30	2000	73	22.8	2E+09	426781	5407312	DC	Discarded
31	1998	95	21.8068	2E+09	427265	5407122	DC	Discarded
31	2000	74	22.7699	2E+09	425597	5407504	DC	Discarded
32	1998	96	21.7901	2E+09	429330	5408623	DC	Discarded
32	2000	79	22.634	2E+09	426189	5407600	DC	Discarded
33	1998	98	21.6127	2E+09	425893	5407600	DC	Discarded
33	2000	85	22.3868	2E+09	426880	5407119	DC	Discarded

*** THE MAXIMUM 100 24-HR AVERAGE CONCENTRATION VALUES FOR SOURCE GROUP: PORT1 ***

RANK BY	YEAR	RANK	CONC	YYYYMM	XR	YR	TYPE	Ontario Reg. 419/05
1	1996	52	1.86919	2E+09	428930	5413023	DC	Discarded
1	1997	1	2.58179	2E+09	427265	5407714	DC	Discarded
1	1998	9	2.25035	2E+09	429128	5408693	DC	Discarded
1	1999	2	2.46545	2E+09	427720	5407741	DC	Discarded
1	2000	23	2.02016	2E+09	425893	5407696	DC	Discarded
2	1996	58	1.81914	2E+09	428930	5412823	DC	Discarded
2	1997	4	2.42054	2E+09	427361	5407714	DC	Discarded
2	1998	11	2.20269	2E+09	429102	5408830	DC	Discarded
2	1999	3	2.42801	2E+09	427700	5407741	DC	Discarded
2	2000	29	1.9857	2E+09	426091	5407696	DC	
3	1997	5	2.40932	2E+09	427265	5407615	DC	Discarded
3	1998	15	2.14812	2E+09	429130	5408823	DC	Discarded
3	1999	13	2.16903	2E+09	427649	5407714	DC	Discarded
3	2000	30	1.98472	2E+09	426068	5407740	DC	
4	1997	6	2.37153	2E+09	427361	5407615	DC	Discarded
4	1998	20	2.03437	2E+09	429130	5408623	DC	Discarded
4	1999	14	2.1553	2E+09	427842	5407517	DC	Discarded
4	2000	33	1.96149	2E+09	426128	5407693	DC	
5	1997	7	2.2845	2E+09	427361	5407517	DC	Discarded
5	1998	22	2.03149	2E+09	427168	5407714	DC	Highest
5	1999	16	2.10619	2E+09	427718	5407601	DC	Discarded
5	2000	37	1.9452	2E+09	425992	5407696	DC	
6	1997	8	2.27825	2E+09	427168	5407714	DC	Discarded
6	1998	32	1.97306	2E+09	427128	5407693	DC	
6	1999	24	2.01465	2E+09	427938	5407517	DC	Discarded
6	2000	42	1.9159	2E+09	425794	5407696	DC	
7	1997	10	2.24154	2E+09	427265	5407517	DC	Discarded
7	1998	39	1.93932	2E+09	429330	5408623	DC	
7	1999	26	1.99494	2E+09	427842	5407418	DC	Discarded
7	2000	50	1.89202	2E+09	425893	5407600	DC	
8	1997	12	2.185	2E+09	427361	5407418	DC	Discarded
8	1998	44	1.91494	2E+09	427168	5407615	DC	
8	1999	27	1.99374	2E+09	427628	5407693	DC	Discarded
8	2000	51	1.87457	2E+09	425794	5407600	DC	
9	1997	17	2.09888	2E+09	427361	5407319	DC	Discarded
9	1998	46	1.90497	2E+09	429130	5408823	DC	
9	1999	28	1.99352	2E+09	427938	5407418	DC	Discarded
9	2000	53	1.86631	2E+09	426091	5407600	DC	
10	1997	18	2.08392	2E+09	427265	5407418	DC	Discarded
10	1998	47	1.8983	2E+09	429102	5408830	DC	
10	1999	31	1.97801	2E+09	427745	5407517	DC	Discarded
10	2000	59	1.81871	2E+09	426068	5407740	DC	
11	1997	19	2.08195	2E+09	427168	5407615	DC	Discarded
11	1998	60	1.80218	2E+09	427072	5407714	DC	
11	1999	43	1.91541	2E+09	427938	5407319	DC	Discarded
11	2000	64	1.79204	2E+09	425794	5407504	DC	

12	1997	21	2.03329	2E+09	427128	5407693	DC	Discarded
12	1998	63	1.7977	2E+09	427168	5407517	DC	
12	1999	56	1.84587	2E+09	427649	5407615	DC	Discarded
12	2000	66	1.77855	2E+09	426781	5407696	DC	
13	1997	25	2.00906	2E+09	427361	5407221	DC	Discarded
13	1998	83	1.68452	2E+09	427265	5407615	DC	
13	1999	62	1.79889	2E+09	427842	5407319	DC	Discarded
13	2000	68	1.77662	2E+09	426189	5407696	DC	
14	1997	34	1.95662	2E+09	427457	5407418	DC	Discarded
14	1998	84	1.68036	2E+09	427265	5407714	DC	
14	1999	65	1.78584	2E+09	427938	5407221	DC	Discarded
14	2000	72	1.75229	2E+09	425992	5407600	DC	
15	1997	35	1.9559	2E+09	427265	5407319	DC	Discarded
15	1998	85	1.67701	2E+09	427168	5407418	DC	
15	1999	67	1.77829	2E+09	428034	5407319	DC	Discarded
15	2000	75	1.73669	2E+09	425893	5407504	DC	
16	1997	36	1.9499	2E+09	427457	5407319	DC	Discarded
16	1998	89	1.66734	2E+09	427265	5407517	DC	
16	1999	70	1.76225	2E+09	428034	5407221	DC	Discarded
16	2000	77	1.71483	2E+09	426091	5407504	DC	
17	1997	38	1.94336	2E+09	427457	5407517	DC	Discarded
17	1998	94	1.65472	2E+09	429414	5408504	DC	
17	1999	74	1.74313	2E+09	428034	5407418	DC	Discarded
17	2000	78	1.71233	2E+09	425992	5407600	DC	
18	1997	40	1.92983	2E+09	427457	5407221	DC	Discarded
18	1998	98	1.63502	2E+09	427265	5407418	DC	
18	1999	76	1.72088	2E+09	427745	5407418	DC	Discarded
18	2000	79	1.70252	2E+09	425992	5407504	DC	
19	1997	41	1.91889	2E+09	427361	5407122	DC	Discarded
19	1999	80	1.69852	2E+09	428034	5407122	DC	Discarded
19	2000	82	1.68513	2E+09	425794	5407408	DC	
20	1997	45	1.91107	2E+09	427168	5407517	DC	Discarded
20	1999	91	1.66354	2E+09	428034	5407517	DC	Discarded
20	2000	86	1.67612	2E+09	426781	5407600	DC	
21	1997	48	1.89711	2E+09	427457	5407615	DC	Discarded
21	1999	97	1.6384	2E+09	427553	5407714	DC	Discarded
21	2000	87	1.67425	2E+09	425992	5407696	DC	
22	1997	49	1.89572	2E+09	427457	5407122	DC	Discarded
22	2000	88	1.66913	2E+09	425696	5407600	DC	
23	1997	54	1.86474	2E+09	427457	5407023	DC	Discarded
23	2000	90	1.66358	2E+09	425696	5407504	DC	
24	1997	55	1.85243	2E+09	427265	5407221	DC	Discarded
24	2000	92	1.6563	2E+09	425992	5407408	DC	
25	1997	57	1.83396	2E+09	427361	5407023	DC	Discarded
25	2000	96	1.64402	2E+09	426091	5407696	DC	
26	1997	61	1.80177	2E+09	427457	5407714	DC	Discarded
26	2000	99	1.63398	2E+09	425696	5407696	DC	
27	1997	69	1.76919	2E+09	427072	5407714	DC	Discarded
28	1997	71	1.75708	2E+09	427168	5407418	DC	Discarded

*** THE MAXIMUM 100 1-HR AVERAGE CONCENTRATION VALUES FOR SOURCE GROUP: PORT2 ***

RANK BY	YEAR	RANK	CONC	YYYYMM	XR	YR	TYPE	Ontario Reg. 419/05
1	1996	4	32.0717	2E+09	428930	5413023	DC	Discarded
1	1997	10	29.3756	2E+09	427361	5407714	DC	Discarded
1	1998	1	44.7687	2E+09	429130	5408823	DC	Discarded
1	1999	18	27.7213	2E+09	427720	5407741	DC	Discarded
1	2000	11	29.1194	2E+09	426091	5407696	DC	Discarded
2	1996	6	31.0036	2E+09	428930	5412823	DC	Discarded
2	1997	23	27.156	2E+09	427361	5407615	DC	Discarded
2	1998	2	44.5924	2E+09	429102	5408830	DC	Discarded
2	1999	25	27.0107	2E+09	427700	5407741	DC	Discarded
2	2000	12	29.0436	2E+09	426128	5407693	DC	Discarded
3	1996	20	27.6082	2E+09	429130	5413223	DC	Discarded
3	1997	33	25.5711	2E+09	427457	5407615	DC	Discarded
3	1998	3	33.2081	2E+09	429330	5408823	DC	Discarded
3	1999	42	24.5728	2E+09	427842	5407517	DC	Discarded
3	2000	13	28.9977	2E+09	426880	5407696	DC	Discarded
4	1996	22	27.5186	2E+09	429128	5413193	DC	Discarded
4	1997	38	25.2144	2E+09	427457	5407517	DC	Discarded
4	1998	5	31.2058	2E+09	428128	5414193	DC	Discarded
4	1999	63	23.4677	2E+09	429730	5412623	DC	Discarded
4	2000	14	28.6061	2E+09	426068	5407740	DC	Discarded
5	1996	100	21.5252	2E+09	429130	5413023	DC	Discarded
5	1997	39	25.1088	2E+09	427457	5407714	DC	Discarded
5	1998	7	30.7972	2E+09	429730	5412623	DC	Discarded
5	1999	76	22.7246	2E+09	427718	5407601	DC	Discarded
5	2000	16	28.3132	2E+09	426781	5407696	DC	Discarded
6	1997	43	24.5427	2E+09	427361	5407517	DC	Discarded
6	1998	8	30.2828	2E+09	428130	5414223	DC	Discarded
6	1999	78	22.6388	2E+09	427649	5407714	DC	Discarded
6	2000	19	27.6586	2E+09	426880	5407600	DC	Discarded
7	1997	47	24.3735	2E+09	427265	5407714	DC	Discarded
7	1998	9	29.4758	2E+09	427168	5407714	DC	Discarded
7	1999	80	22.621	2E+09	427938	5407418	DC	Discarded
7	2000	21	27.5935	2E+09	426091	5407600	DC	Discarded
8	1997	50	24.2735	2E+09	427457	5407418	DC	Discarded
8	1998	15	28.5284	2E+09	427128	5407693	DC	Discarded
8	1999	84	22.4899	2E+09	427842	5407418	DC	Discarded
8	2000	26	26.9779	2E+09	426917	5407750	DC	Discarded
9	1997	60	23.5091	2E+09	429128	5408693	DC	Discarded
9	1998	17	27.7752	2E+09	427168	5407615	DC	Discarded
9	1999	87	22.1075	2E+09	429530	5412623	DC	Discarded
9	2000	27	26.702	2E+09	426781	5407600	DC	Discarded
10	1997	70	23.0022	2E+09	427457	5407319	DC	Discarded
10	1998	24	27.0385	2E+09	428817	5414150	DC	Discarded
10	1999	88	22.0997	2E+09	427938	5407517	DC	Discarded
10	2000	28	26.4611	2E+09	426880	5407504	DC	Discarded
11	1997	81	22.6112	2E+09	429130	5408623	DC	Discarded

11	1998	30	26.0376	2E+09	427168	5407517	DC	Discarded
11	1999	91	21.9764	2E+09	427938	5407319	DC	Discarded
11	2000	29	26.076	2E+09	426189	5407696	DC	Discarded
12	1997	94	21.8686	2E+09	427361	5407418	DC	Discarded
12	1998	32	25.6335	2E+09	427072	5407714	DC	Discarded
12	2000	31	25.7405	2E+09	425628	5407693	DC	Discarded
13	1997	99	21.5311	2E+09	427457	5407221	DC	Discarded
13	1998	41	24.6292	2E+09	429930	5412623	DC	Discarded
13	2000	34	25.513	2E+09	425696	5407696	DC	Discarded
14	1998	46	24.4012	2E+09	429930	5412823	DC	Discarded
14	2000	35	25.4765	2E+09	426091	5407504	DC	Discarded
15	1998	49	24.3145	2E+09	429425	5408830	DC	Discarded
15	2000	36	25.3381	2E+09	426880	5407408	DC	Discarded
16	1998	51	24.2274	2E+09	427168	5407418	DC	Discarded
16	2000	37	25.2555	2E+09	426781	5407504	DC	Discarded
17	1998	54	24.0711	2E+09	427265	5407615	DC	Discarded
17	2000	40	24.7592	2E+09	425597	5407696	DC	Discarded
18	1998	55	23.9724	2E+09	427265	5407517	DC	Discarded
18	2000	44	24.4641	2E+09	425992	5407504	DC	Discarded
19	1998	57	23.8408	2E+09	425992	5407696	DC	Discarded
19	2000	45	24.4125	2E+09	425597	5407600	DC	Discarded
20	1998	58	23.8064	2E+09	427265	5407714	DC	Discarded
20	2000	48	24.3377	2E+09	426880	5407312	DC	Discarded
21	1998	59	23.61	2E+09	427265	5407418	DC	Discarded
21	2000	52	24.1621	2E+09	425992	5407408	DC	Discarded
22	1998	61	23.5091	2E+09	429128	5408693	DC	Discarded
22	2000	53	24.1277	2E+09	425992	5407600	DC	Discarded
23	1998	62	23.5005	2E+09	429128	5408693	DC	Discarded
23	2000	56	23.9403	2E+09	426781	5407408	DC	Discarded
24	1998	66	23.2248	2E+09	427265	5407319	DC	Discarded
24	2000	64	23.3859	2E+09	426880	5407216	DC	Discarded
25	1998	72	22.9415	2E+09	427072	5407615	DC	Discarded
25	2000	65	23.3325	2E+09	425992	5407312	DC	Discarded
26	1998	75	22.7486	2E+09	427168	5407319	DC	Discarded
26	2000	67	23.11	2E+09	426091	5407408	DC	Discarded
27	1998	77	22.6804	2E+09	427265	5407221	DC	Discarded
27	2000	68	23.0311	2E+09	425730	5406423	DC	Discarded
28	1998	82	22.6112	2E+09	429130	5408623	DC	Discarded
28	2000	69	23.0038	2E+09	425992	5407696	DC	Discarded
29	1998	83	22.5772	2E+09	426068	5407740	DC	Discarded
29	2000	71	22.9786	2E+09	425276	5407752	DC	Discarded
30	1998	93	21.8866	2E+09	425992	5407600	DC	Discarded
30	2000	73	22.8	2E+09	426781	5407312	DC	Discarded
31	1998	95	21.8068	2E+09	427265	5407122	DC	Discarded
31	2000	74	22.7699	2E+09	425597	5407504	DC	Discarded
32	1998	96	21.7901	2E+09	429330	5408623	DC	Discarded
32	2000	79	22.634	2E+09	426189	5407600	DC	Discarded
33	1998	98	21.6127	2E+09	425893	5407600	DC	Discarded
33	2000	85	22.3868	2E+09	426880	5407119	DC	Discarded

*** THE MAXIMUM 100 24-HR AVERAGE CONCENTRATION VALUES FOR SOURCE GROUP: PORT2 ***

RANK BY	YEAR	RANK	CONC	YYYYMM	XR	YR	TYPE	Ontario Reg. 419/05
1	1996	52	1.86919	2E+09	428930	5413023	DC	Discarded
1	1997	1	2.58179	2E+09	427265	5407714	DC	Discarded
1	1998	9	2.25035	2E+09	429128	5408693	DC	Discarded
1	1999	2	2.46545	2E+09	427720	5407741	DC	Discarded
1	2000	23	2.02016	2E+09	425893	5407696	DC	Discarded
2	1996	58	1.81914	2E+09	428930	5412823	DC	Discarded
2	1997	4	2.42054	2E+09	427361	5407714	DC	Discarded
2	1998	11	2.20269	2E+09	429102	5408830	DC	Discarded
2	1999	3	2.42801	2E+09	427700	5407741	DC	Discarded
2	2000	29	1.9857	2E+09	426091	5407696	DC	
3	1997	5	2.40932	2E+09	427265	5407615	DC	Discarded
3	1998	15	2.14812	2E+09	429130	5408823	DC	Discarded
3	1999	13	2.16903	2E+09	427649	5407714	DC	Discarded
3	2000	30	1.98472	2E+09	426068	5407740	DC	
4	1997	6	2.37153	2E+09	427361	5407615	DC	Discarded
4	1998	20	2.03437	2E+09	429130	5408623	DC	Discarded
4	1999	14	2.1553	2E+09	427842	5407517	DC	Discarded
4	2000	33	1.96149	2E+09	426128	5407693	DC	
5	1997	7	2.2845	2E+09	427361	5407517	DC	Discarded
5	1998	22	2.03149	2E+09	427168	5407714	DC	Highest
5	1999	16	2.10619	2E+09	427718	5407601	DC	Discarded
5	2000	37	1.9452	2E+09	425992	5407696	DC	
6	1997	8	2.27825	2E+09	427168	5407714	DC	Discarded
6	1998	32	1.97306	2E+09	427128	5407693	DC	
6	1999	24	2.01465	2E+09	427938	5407517	DC	Discarded
6	2000	42	1.9159	2E+09	425794	5407696	DC	
7	1997	10	2.24154	2E+09	427265	5407517	DC	Discarded
7	1998	39	1.93932	2E+09	429330	5408623	DC	
7	1999	26	1.99494	2E+09	427842	5407418	DC	Discarded
7	2000	50	1.89202	2E+09	425893	5407600	DC	
8	1997	12	2.185	2E+09	427361	5407418	DC	Discarded
8	1998	44	1.91494	2E+09	427168	5407615	DC	
8	1999	27	1.99374	2E+09	427628	5407693	DC	Discarded
8	2000	51	1.87457	2E+09	425794	5407600	DC	
9	1997	17	2.09888	2E+09	427361	5407319	DC	Discarded
9	1998	46	1.90497	2E+09	429130	5408823	DC	
9	1999	28	1.99352	2E+09	427938	5407418	DC	Discarded
9	2000	53	1.86631	2E+09	426091	5407600	DC	
10	1997	18	2.08392	2E+09	427265	5407418	DC	Discarded
10	1998	47	1.8983	2E+09	429102	5408830	DC	
10	1999	31	1.97801	2E+09	427745	5407517	DC	Discarded
10	2000	59	1.81871	2E+09	426068	5407740	DC	
11	1997	19	2.08195	2E+09	427168	5407615	DC	Discarded
11	1998	60	1.80218	2E+09	427072	5407714	DC	
11	1999	43	1.91541	2E+09	427938	5407319	DC	Discarded
11	2000	64	1.79204	2E+09	425794	5407504	DC	

12	1997	21	2.03329	2E+09	427128	5407693	DC	Discarded
12	1998	63	1.7977	2E+09	427168	5407517	DC	
12	1999	56	1.84587	2E+09	427649	5407615	DC	Discarded
12	2000	66	1.77855	2E+09	426781	5407696	DC	
13	1997	25	2.00906	2E+09	427361	5407221	DC	Discarded
13	1998	83	1.68452	2E+09	427265	5407615	DC	
13	1999	62	1.79889	2E+09	427842	5407319	DC	Discarded
13	2000	68	1.77662	2E+09	426189	5407696	DC	
14	1997	34	1.95662	2E+09	427457	5407418	DC	Discarded
14	1998	84	1.68036	2E+09	427265	5407714	DC	
14	1999	65	1.78584	2E+09	427938	5407221	DC	Discarded
14	2000	72	1.75229	2E+09	425992	5407600	DC	
15	1997	35	1.9559	2E+09	427265	5407319	DC	Discarded
15	1998	85	1.67701	2E+09	427168	5407418	DC	
15	1999	67	1.77829	2E+09	428034	5407319	DC	Discarded
15	2000	75	1.73669	2E+09	425893	5407504	DC	
16	1997	36	1.9499	2E+09	427457	5407319	DC	Discarded
16	1998	89	1.66734	2E+09	427265	5407517	DC	
16	1999	70	1.76225	2E+09	428034	5407221	DC	Discarded
16	2000	77	1.71483	2E+09	426091	5407504	DC	
17	1997	38	1.94336	2E+09	427457	5407517	DC	Discarded
17	1998	94	1.65472	2E+09	429414	5408504	DC	
17	1999	74	1.74313	2E+09	428034	5407418	DC	Discarded
17	2000	78	1.71233	2E+09	425992	5407600	DC	
18	1997	40	1.92983	2E+09	427457	5407221	DC	Discarded
18	1998	98	1.63502	2E+09	427265	5407418	DC	
18	1999	76	1.72088	2E+09	427745	5407418	DC	Discarded
18	2000	79	1.70252	2E+09	425992	5407504	DC	
19	1997	41	1.91889	2E+09	427361	5407122	DC	Discarded
19	1999	80	1.69852	2E+09	428034	5407122	DC	Discarded
19	2000	82	1.68513	2E+09	425794	5407408	DC	
20	1997	45	1.91107	2E+09	427168	5407517	DC	Discarded
20	1999	91	1.66354	2E+09	428034	5407517	DC	Discarded
20	2000	86	1.67612	2E+09	426781	5407600	DC	
21	1997	48	1.89711	2E+09	427457	5407615	DC	Discarded
21	1999	97	1.6384	2E+09	427553	5407714	DC	Discarded
21	2000	87	1.67425	2E+09	425992	5407696	DC	
22	1997	49	1.89572	2E+09	427457	5407122	DC	Discarded
22	2000	88	1.66913	2E+09	425696	5407600	DC	
23	1997	54	1.86474	2E+09	427457	5407023	DC	Discarded
23	2000	90	1.66358	2E+09	425696	5407504	DC	
24	1997	55	1.85243	2E+09	427265	5407221	DC	Discarded
24	2000	92	1.6563	2E+09	425992	5407408	DC	
25	1997	57	1.83396	2E+09	427361	5407023	DC	Discarded
25	2000	96	1.64402	2E+09	426091	5407696	DC	
26	1997	61	1.80177	2E+09	427457	5407714	DC	Discarded
26	2000	99	1.63398	2E+09	425696	5407696	DC	
27	1997	69	1.76919	2E+09	427072	5407714	DC	Discarded
28	1997	71	1.75708	2E+09	427168	5407418	DC	Discarded

*** THE MAXIMUM 100 24-HR AVERAGE CONCENTRATION VALUES FOR SOURCE GROUP: SPACEHEA ***

RANK BY '	YEAR	RANK	CONC	YYYYMM	XR	YR	TYPE	Ontario Reg. 419/05
1	1996	3	1.57085	2E+09	428809	5413327	DC	Discarded
1	1997	31	1.19235	2E+09	429422	5407591	DC	Discarded
1	1998	2	1.58594	2E+09	424461	5407786	DC	Discarded
1	1999	1	1.72734	2E+09	428808	5412548	DC	Discarded
1	2000	6	1.44339	2E+09	428808	5412548	DC	Discarded
2	1996	5	1.5066	2E+09	428817	5414150	DC	
2	1997	40	1.16282	2E+09	430381	5410114	DC	
2	1998	25	1.26307	2E+09	423599	5406990	DC	Discarded
2	1999	4	1.51975	2E+09	429272	5408532	DC	Highest
2	2000	9	1.39666	2E+09	426068	5407740	DC	
3	1996	8	1.40435	2E+09	426068	5407740	DC	
3	1997	42	1.15099	2E+09	424798	5414204	DC	
3	1998	27	1.21767	2E+09	426272	5414932	DC	
3	1999	7	1.44165	2E+09	429472	5408332	DC	
3	2000	10	1.39533	2E+09	430381	5410114	DC	
4	1996	19	1.31356	2E+09	425276	5407752	DC	
4	1997	50	1.09344	2E+09	424792	5414601	DC	
4	1998	29	1.20954	2E+09	428809	5413327	DC	
4	1999	11	1.38971	2E+09	429093	5408498	DC	
4	2000	18	1.31931	2E+09	428809	5413327	DC	
5	1996	20	1.30045	2E+09	426068	5407740	DC	
5	1997	67	1.0502	2E+09	424798	5414204	DC	
5	1998	30	1.19886	2E+09	429093	5408498	DC	
5	1999	12	1.36767	2E+09	428809	5413327	DC	
5	2000	28	1.21411	2E+09	425245	5406949	DC	
6	1996	23	1.27442	2E+09	430381	5410114	DC	
6	1997	73	1.03954	2E+09	429272	5408532	DC	
6	1998	33	1.18395	2E+09	424499	5408579	DC	
6	1999	13	1.34072	2E+09	429102	5408830	DC	
6	2000	32	1.18588	2E+09	425276	5407752	DC	
7	1996	24	1.27041	2E+09	430381	5410114	DC	
7	1997	79	1.02921	2E+09	428809	5413327	DC	
7	1998	47	1.10963	2E+09	427720	5407741	DC	
7	1999	14	1.33873	2E+09	429614	5413326	DC	
7	2000	34	1.1809	2E+09	429093	5408498	DC	
8	1996	38	1.17314	2E+09	428808	5412548	DC	
8	1997	81	1.02595	2E+09	428808	5412548	DC	
8	1998	54	1.08557	2E+09	424798	5414204	DC	
8	1999	15	1.33721	2E+09	428808	5412548	DC	
8	2000	35	1.1806	2E+09	425276	5407752	DC	
9	1996	39	1.16795	2E+09	429093	5408498	DC	
9	1997	85	1.01847	2E+09	428809	5413327	DC	
9	1998	56	1.07773	2E+09	427700	5407741	DC	
9	1999	16	1.3357	2E+09	429672	5408132	DC	
9	2000	41	1.15116	2E+09	431997	5410087	DC	
10	1996	48	1.09886	2E+09	429628	5414138	DC	

10	1997	97	0.99739	2E+09	429425	5408830	DC
10	1998	58	1.0666	2E+09	428808	5412548	DC
10	1999	17	1.32282	2E+09	429472	5408132	DC
10	2000	43	1.13959	2E+09	428808	5412548	DC
11	1996	61	1.06135	2E+09	426272	5414932	DC
11	1998	66	1.05179	2E+09	428809	5413327	DC
11	1999	21	1.29222	2E+09	429414	5408504	DC
11	2000	44	1.13874	2E+09	425245	5406949	DC
12	1996	63	1.0604	2E+09	429425	5408830	DC
12	1998	76	1.03425	2E+09	428564	5407591	DC
12	1999	22	1.28568	2E+09	429431	5408490	DC
12	2000	46	1.11131	2E+09	426068	5407740	DC
13	1996	65	1.05257	2E+09	424798	5414204	DC
13	1998	77	1.0322	2E+09	424499	5408579	DC
13	1999	26	1.22833	2E+09	429672	5407932	DC
13	2000	55	1.07906	2E+09	424798	5414204	DC
14	1996	68	1.04929	2E+09	423997	5414610	DC
14	1998	80	1.02772	2E+09	428808	5412548	DC
14	1999	36	1.17743	2E+09	428809	5413327	DC
14	2000	57	1.07671	2E+09	429102	5408830	DC
15	1996	69	1.04886	2E+09	428817	5414150	DC
15	1998	91	1.00666	2E+09	424499	5408579	DC
15	1999	37	1.17423	2E+09	429872	5407932	DC
15	2000	70	1.04817	2E+09	428808	5412548	DC
16	1996	74	1.03696	2E+09	424798	5414204	DC
16	1998	92	1.00368	2E+09	429102	5408830	DC
16	1999	45	1.11436	2E+09	428808	5412548	DC
16	2000	71	1.04246	2E+09	429472	5408132	DC
17	1996	82	1.02297	2E+09	429472	5407932	DC
17	1998	93	1.00189	2E+09	429472	5408132	DC
17	1999	49	1.09389	2E+09	428817	5414150	DC
17	2000	78	1.03082	2E+09	424792	5414601	DC
18	1996	84	1.01848	2E+09	425245	5406949	DC
18	1998	95	1.00105	2E+09	430381	5410114	DC
18	1999	51	1.09061	2E+09	430381	5410114	DC
18	2000	94	1.00136	2E+09	427272	5415932	DC
19	1996	87	1.01277	2E+09	424461	5407786	DC
19	1998	96	0.99785	2E+09	429272	5408532	DC
19	1999	52	1.08983	2E+09	429425	5408830	DC
20	1996	88	1.00918	2E+09	429272	5408732	DC
20	1998	100	0.99238	2E+09	429102	5408830	DC
20	1999	53	1.0882	2E+09	424792	5414601	DC
21	1999	59	1.06444	2E+09	428808	5412548	DC
22	1999	60	1.06241	2E+09	429672	5408332	DC
23	1999	62	1.06105	2E+09	429272	5408732	DC
24	1999	64	1.05983	2E+09	430203	5407573	DC
25	1999	72	1.04092	2E+09	424798	5414204	DC
26	1999	75	1.03581	2E+09	428809	5413327	DC
27	1999	83	1.02241	2E+09	429628	5414138	DC

*** THE MAXIMUM 100 1-HR AVERAGE CONCENTRATION VALUES FOR SOURCE GROUP: TMA ***

RANK BY	YEAR	RANK	CONC	YYYYMM	XR	YR	TYPE	Ontario Reg. 419/05
1	1996	100	14.8581	2E+09	422377	5414238	DC	Discarded
1	1997	2	16.7498	2E+09	420767	5413450	DC	Discarded
1	1999	16	15.8451	2E+09	420767	5413450	DC	Discarded
1	2000	1	16.9842	2E+09	420767	5413450	DC	Discarded
2	1997	3	16.7146	2E+09	420767	5413450	DC	Discarded
2	1999	44	15.3098	2E+09	420728	5413493	DC	Discarded
2	2000	7	16.3319	2E+09	420767	5413450	DC	Discarded
3	1997	4	16.6483	2E+09	420767	5413450	DC	Discarded
3	1999	67	15.0774	2E+09	420728	5413543	DC	Discarded
3	2000	8	16.3158	2E+09	420728	5413493	DC	Discarded
4	1997	5	16.6391	2E+09	420767	5413450	DC	Discarded
4	1999	96	14.8955	2E+09	420678	5413493	DC	Discarded
4	2000	13	15.9754	2E+09	420678	5413493	DC	Discarded
5	1997	6	16.4633	2E+09	420767	5413450	DC	Discarded
5	1999	99	14.8641	2E+09	420728	5413593	DC	Discarded
5	2000	15	15.8695	2E+09	420728	5413543	DC	Discarded
6	1997	9	16.1157	2E+09	420728	5413493	DC	Discarded
6	2000	25	15.6834	2E+09	420628	5413493	DC	Discarded
7	1997	10	16.0507	2E+09	420728	5413493	DC	Discarded
7	2000	27	15.6604	2E+09	420767	5413450	DC	Discarded
8	1997	11	16.0401	2E+09	420728	5413493	DC	Discarded
8	2000	29	15.6118	2E+09	420728	5413493	DC	Discarded
9	1997	12	16.0191	2E+09	420728	5413493	DC	Discarded
9	2000	31	15.5165	2E+09	420678	5413543	DC	Discarded
10	1997	14	15.9744	2E+09	420767	5413450	DC	Discarded
10	2000	36	15.4286	2E+09	420728	5413593	DC	Discarded
11	1997	17	15.8258	2E+09	420728	5413493	DC	Discarded
11	2000	37	15.4099	2E+09	420578	5413493	DC	Discarded
12	1997	18	15.8174	2E+09	420767	5413450	DC	Discarded
12	2000	46	15.2973	2E+09	420678	5413493	DC	Discarded
13	1997	19	15.7765	2E+09	420678	5413493	DC	Discarded
13	2000	52	15.2392	2E+09	420628	5413543	DC	Discarded
14	1997	20	15.7233	2E+09	420728	5413543	DC	Discarded
14	2000	54	15.2088	2E+09	420730	5413623	DC	Discarded
15	1997	21	15.7185	2E+09	420678	5413493	DC	Discarded
15	2000	59	15.171	2E+09	420528	5413493	DC	Discarded
16	1997	22	15.6927	2E+09	420767	5413450	DC	Discarded
16	2000	63	15.1325	2E+09	420728	5413493	DC	Discarded
17	1997	23	15.6855	2E+09	420728	5413543	DC	Discarded
17	2000	64	15.1163	2E+09	420767	5413450	DC	Discarded
18	1997	24	15.6841	2E+09	420678	5413493	DC	Discarded
18	2000	68	15.0759	2E+09	420678	5413593	DC	Discarded
19	1997	26	15.6761	2E+09	420678	5413493	DC	Discarded
19	2000	73	15.0501	2E+09	420728	5413543	DC	Discarded
20	1997	28	15.6444	2E+09	420728	5413543	DC	Discarded
20	2000	75	15.0206	2E+09	420628	5413493	DC	Discarded

21	1997	30	15.5979	2E+09	420728	5413543	DC	Discarded
21	2000	80	14.9943	2E+09	420728	5413643	DC	Discarded
22	1997	32	15.5023	2E+09	420678	5413493	DC	Discarded
22	2000	81	14.9921	2E+09	422377	5414238	DC	Discarded
23	1997	33	15.4842	2E+09	420628	5413493	DC	Discarded
23	2000	90	14.9463	2E+09	420578	5413543	DC	Discarded
24	1997	34	15.4317	2E+09	420628	5413493	DC	Discarded
24	2000	94	14.9164	2E+09	420478	5413493	DC	Discarded
25	1997	35	15.4313	2E+09	420728	5413493	DC	Discarded
25	2000	95	14.9045	2E+09	420728	5413543	DC	Discarded
26	1997	38	15.4082	2E+09	420728	5413543	DC	Discarded
27	1997	39	15.3772	2E+09	420628	5413493	DC	Discarded
28	1997	40	15.3691	2E+09	420628	5413493	DC	Discarded
29	1997	41	15.361	2E+09	420678	5413543	DC	Discarded
30	1997	42	15.356	2E+09	420728	5413593	DC	Discarded
31	1997	43	15.355	2E+09	420728	5413593	DC	Discarded
32	1997	45	15.3091	2E+09	420678	5413543	DC	Discarded
33	1997	47	15.2962	2E+09	420767	5413450	DC	Highest
34	1997	48	15.2956	2E+09	420728	5413593	DC	
35	1997	49	15.283	2E+09	420728	5413493	DC	
36	1997	50	15.2789	2E+09	420678	5413543	DC	
37	1997	51	15.2567	2E+09	420678	5413543	DC	
38	1997	53	15.2224	2E+09	420628	5413493	DC	
39	1997	55	15.2072	2E+09	420578	5413493	DC	
40	1997	56	15.2048	2E+09	420730	5413623	DC	
41	1997	57	15.1932	2E+09	420728	5413543	DC	
42	1997	58	15.1838	2E+09	420730	5413623	DC	
43	1997	60	15.1628	2E+09	420578	5413493	DC	
44	1997	61	15.1469	2E+09	420728	5413593	DC	
45	1997	62	15.1344	2E+09	420730	5413623	DC	
46	1997	65	15.091	2E+09	420578	5413493	DC	
47	1997	66	15.0779	2E+09	420628	5413543	DC	
48	1997	69	15.0706	2E+09	420678	5413543	DC	
49	1997	70	15.0636	2E+09	420578	5413493	DC	
50	1997	71	15.0633	2E+09	420728	5413493	DC	
51	1997	72	15.0511	2E+09	420728	5413543	DC	
52	1997	74	15.0327	2E+09	420728	5413643	DC	
53	1997	76	15.0117	2E+09	420678	5413493	DC	
54	1997	77	15.0117	2E+09	420628	5413543	DC	
55	1997	78	15.0037	2E+09	420728	5413593	DC	
56	1997	79	14.9999	2E+09	420728	5413643	DC	
57	1997	82	14.992	2E+09	420628	5413543	DC	
58	1997	83	14.987	2E+09	420628	5413543	DC	
59	1997	84	14.9866	2E+09	420678	5413593	DC	
60	1997	85	14.9753	2E+09	420728	5413593	DC	
61	1997	86	14.9693	2E+09	420678	5413593	DC	
62	1997	87	14.9594	2E+09	420578	5413493	DC	
63	1997	88	14.959	2E+09	420528	5413493	DC	
64	1997	89	14.9574	2E+09	420728	5413643	DC	

*** THE MAXIMUM 100 24-HR AVERAGE CONCENTRATION VALUES FOR SOURCE GROUP: TMA ***

RANK BY	YEAR	RANK	CONC	YYYYMM	XR	YR	TYPE	Ontario Reg. 419/05
1	1997	1	6.60894	2E+09	420767	5413450	DC	Discarded
1	1999	2	6.60366	2E+09	422377	5414238	DC	Discarded
2	1997	17	6.19728	2E+09	420728	5413493	DC	Discarded
2	1999	3	6.53623	2E+09	422358	5414243	DC	Discarded
3	1997	19	6.16718	2E+09	420767	5413450	DC	Highest
3	1999	4	6.42314	2E+09	422338	5414243	DC	Discarded
4	1997	33	5.99608	2E+09	420678	5413493	DC	
4	1999	5	6.39736	2E+09	422358	5414263	DC	Discarded
5	1997	37	5.95539	2E+09	420728	5413543	DC	
5	1999	6	6.38723	2E+09	422318	5414243	DC	Discarded
6	1997	52	5.84475	2E+09	420628	5413493	DC	
6	1999	7	6.3464	2E+09	422298	5414243	DC	Discarded
7	1997	58	5.79122	2E+09	420728	5413493	DC	
7	1999	8	6.34264	2E+09	422338	5414263	DC	Discarded
8	1997	60	5.76579	2E+09	420678	5413543	DC	
8	1999	9	6.31089	2E+09	422278	5414243	DC	Discarded
9	1997	69	5.71211	2E+09	420728	5413593	DC	
9	1999	10	6.30887	2E+09	422318	5414263	DC	Discarded
10	1997	71	5.71028	2E+09	420578	5413493	DC	
10	1999	11	6.30001	2E+09	422358	5414283	DC	Discarded
11	1997	80	5.62801	2E+09	420628	5413543	DC	
11	1999	12	6.26506	2E+09	422338	5414283	DC	Discarded
12	1997	87	5.5995	2E+09	420678	5413493	DC	
12	1999	13	6.22041	2E+09	422358	5414303	DC	Discarded
13	1997	88	5.58934	2E+09	420528	5413493	DC	
13	1999	14	6.22016	2E+09	422298	5414263	DC	Discarded
14	1997	89	5.57911	2E+09	420730	5413623	DC	
14	1999	15	6.20722	2E+09	422318	5414283	DC	Discarded
15	1997	96	5.5315	2E+09	420678	5413593	DC	
15	1999	16	6.1976	2E+09	422258	5414243	DC	Discarded
16	1997	100	5.506	2E+09	420728	5413543	DC	
16	1999	18	6.18374	2E+09	422338	5414303	DC	Discarded
17	1999	20	6.16384	2E+09	422278	5414263	DC	Discarded
18	1999	21	6.14529	2E+09	422358	5414323	DC	Discarded
19	1999	22	6.12539	2E+09	422298	5414283	DC	Discarded
20	1999	23	6.1077	2E+09	422338	5414323	DC	Discarded
21	1999	24	6.10627	2E+09	422238	5414243	DC	Discarded
22	1999	25	6.1046	2E+09	422258	5414263	DC	Discarded
23	1999	26	6.0952	2E+09	422318	5414303	DC	Discarded
24	1999	27	6.09105	2E+09	422278	5414283	DC	Discarded
25	1999	28	6.07191	2E+09	422358	5414343	DC	Discarded
26	1999	29	6.0529	2E+09	422298	5414303	DC	Discarded
27	1999	30	6.03487	2E+09	422338	5414343	DC	Discarded
28	1999	31	6.01282	2E+09	422318	5414323	DC	Discarded
29	1999	32	6.00009	2E+09	422358	5414363	DC	Discarded
30	1999	34	5.98668	2E+09	422258	5414283	DC	Discarded

31	1999	35	5.96665	2E+09	422278	5414303	DC	Discarded
32	1999	36	5.96354	2E+09	422338	5414363	DC	Discarded
33	1999	38	5.95494	2E+09	422238	5414263	DC	Discarded
34	1999	39	5.95283	2E+09	422298	5414323	DC	Discarded
35	1999	40	5.95028	2E+09	422218	5414243	DC	Discarded
36	1999	41	5.94575	2E+09	422318	5414343	DC	Discarded
37	1999	42	5.92969	2E+09	422358	5414383	DC	Discarded
38	1999	43	5.89361	2E+09	422338	5414383	DC	Discarded
39	1999	44	5.8917	2E+09	422258	5414303	DC	Discarded
40	1999	45	5.88737	2E+09	422238	5414283	DC	Discarded
41	1999	46	5.88655	2E+09	422198	5414243	DC	Discarded
42	1999	47	5.88327	2E+09	422218	5414263	DC	Discarded
43	1999	48	5.87973	2E+09	422318	5414363	DC	Discarded
44	1999	49	5.87417	2E+09	422278	5414323	DC	Discarded
45	1999	50	5.8606	2E+09	422358	5414403	DC	Discarded
46	1999	51	5.85997	2E+09	422298	5414343	DC	Discarded
47	1999	53	5.82315	2E+09	422338	5414403	DC	Discarded
48	1999	54	5.81473	2E+09	422318	5414383	DC	Discarded
49	1999	55	5.80969	2E+09	422278	5414343	DC	Discarded
50	1999	56	5.79602	2E+09	422298	5414363	DC	Discarded
51	1999	57	5.79276	2E+09	422358	5414423	DC	Discarded
52	1999	59	5.78881	2E+09	422258	5414323	DC	Discarded
53	1999	61	5.76185	2E+09	422238	5414303	DC	Discarded
54	1999	62	5.75069	2E+09	422318	5414403	DC	Discarded
55	1999	63	5.7478	2E+09	422278	5414363	DC	Discarded
56	1999	64	5.74717	2E+09	422218	5414283	DC	Discarded
57	1999	65	5.73297	2E+09	422298	5414383	DC	Discarded
58	1999	66	5.73182	2E+09	422198	5414263	DC	Discarded
59	1999	67	5.72608	2E+09	422358	5414443	DC	Discarded
60	1999	68	5.71405	2E+09	422338	5414423	DC	Discarded
61	1999	70	5.71069	2E+09	422178	5414243	DC	Discarded
62	1999	72	5.70228	2E+09	422330	5414423	DC	Discarded
63	1999	73	5.68974	2E+09	422258	5414343	DC	Discarded
64	1999	74	5.6876	2E+09	422318	5414423	DC	Discarded
65	1999	75	5.68668	2E+09	422278	5414383	DC	Discarded
66	1999	76	5.67153	2E+09	422298	5414403	DC	Discarded
67	1999	77	5.67096	2E+09	422238	5414323	DC	Discarded
68	1999	78	5.66767	2E+09	422218	5414303	DC	Discarded
69	1999	79	5.64564	2E+09	422338	5414443	DC	Discarded
70	1999	81	5.62708	2E+09	422278	5414403	DC	Discarded
71	1999	82	5.62544	2E+09	422318	5414443	DC	Discarded
72	1999	83	5.61124	2E+09	422258	5414363	DC	Discarded
73	1999	84	5.61018	2E+09	422298	5414423	DC	Discarded
74	1999	85	5.60404	2E+09	422238	5414343	DC	Discarded
75	1999	86	5.60073	2E+09	422198	5414283	DC	Discarded
76	1999	90	5.56746	2E+09	422278	5414423	DC	Discarded
77	1999	91	5.56233	2E+09	422218	5414323	DC	Discarded
78	1999	92	5.55603	2E+09	422258	5414383	DC	Discarded
79	1999	93	5.55091	2E+09	422178	5414263	DC	Discarded

Discrete F	X	Y	Concentr	Elevation	Hill Heigh	Flagpole (	Averagin	Source Gr	Num Year	Net ID
	422377	5414238	0.89315	379	379	0	ANNUAL	TMA	5	
TMA	422358	5414243	0.88027	379.1	379.1	0	ANNUAL	TMA	5	
TMA	422338	5414243	0.86672	380	380	0	ANNUAL	TMA	5	
TMA	422318	5414243	0.85974	380	380	0	ANNUAL	TMA	5	
TMA	422358	5414263	0.85489	379.76	379.76	0	ANNUAL	TMA	5	
TMA	422298	5414243	0.85247	380.07	380.07	0	ANNUAL	TMA	5	
TMA	422338	5414263	0.84641	380	380	0	ANNUAL	TMA	5	
TMA	422278	5414243	0.84574	380.09	380.09	0	ANNUAL	TMA	5	
TMA	422318	5414263	0.83977	380	380	0	ANNUAL	TMA	5	
TMA	422358	5414283	0.83368	379.97	379.97	0	ANNUAL	TMA	5	
TMA	422258	5414243	0.8326	381.02	381.02	0	ANNUAL	TMA	5	
TMA	422298	5414263	0.82871	380.67	380.67	0	ANNUAL	TMA	5	
TMA	422338	5414283	0.82701	380	380	0	ANNUAL	TMA	5	
TMA	422238	5414243	0.82138	381.67	381.67	0	ANNUAL	TMA	5	
TMA	422278	5414263	0.82042	380.96	380.96	0	ANNUAL	TMA	5	
TMA	422318	5414283	0.81856	380.33	380.33	0	ANNUAL	TMA	5	
TMA	422358	5414303	0.8146	380	380	0	ANNUAL	TMA	5	
TMA	422258	5414263	0.81196	381.29	381.29	0	ANNUAL	TMA	5	
TMA	422298	5414283	0.80826	380.95	380.95	0	ANNUAL	TMA	5	
TMA	422338	5414303	0.80795	380.08	380.08	0	ANNUAL	TMA	5	
TMA	422218	5414243	0.80493	382.91	382.91	0	ANNUAL	TMA	5	
TMA	422278	5414283	0.80192	381.01	381.01	0	ANNUAL	TMA	5	
TMA	422318	5414303	0.79719	380.83	380.83	0	ANNUAL	TMA	5	
TMA	422358	5414323	0.7965	380	380	0	ANNUAL	TMA	5	
TMA	422238	5414263	0.79621	382.55	382.55	0	ANNUAL	TMA	5	
TMA	422198	5414243	0.79606	383.26	383.26	0	ANNUAL	TMA	5	
TMA	422298	5414303	0.79028	381	381	0	ANNUAL	TMA	5	
TMA	422258	5414283	0.78999	381.87	381.87	0	ANNUAL	TMA	5	
TMA	422338	5414323	0.78994	380.12	380.12	0	ANNUAL	TMA	5	
TMA	422218	5414263	0.78688	382.99	382.99	0	ANNUAL	TMA	5	
TMA	422278	5414303	0.77992	381.69	381.69	0	ANNUAL	TMA	5	
TMA	422358	5414343	0.77912	380	380	0	ANNUAL	TMA	5	
TMA	422318	5414323	0.77887	381	381	0	ANNUAL	TMA	5	
TMA	422238	5414283	0.77856	382.63	382.63	0	ANNUAL	TMA	5	
TMA	422178	5414243	0.77812	384.56	384.56	0	ANNUAL	TMA	5	
TMA	422338	5414343	0.77276	380.14	380.14	0	ANNUAL	TMA	5	
TMA	422198	5414263	0.77115	384.14	384.14	0	ANNUAL	TMA	5	
TMA	422298	5414323	0.7707	381.41	381.41	0	ANNUAL	TMA	5	
TMA	422258	5414303	0.77056	382.23	382.23	0	ANNUAL	TMA	5	
TMA	422218	5414283	0.76393	383.74	383.74	0	ANNUAL	TMA	5	
TMA	422358	5414363	0.76241	380	380	0	ANNUAL	TMA	5	
TMA	422318	5414343	0.76235	381	381	0	ANNUAL	TMA	5	
TMA	422278	5414323	0.76114	382.03	382.03	0	ANNUAL	TMA	5	
TMA	422158	5414243	0.75946	385.84	385.84	0	ANNUAL	TMA	5	
TMA	422238	5414303	0.75691	383.31	383.31	0	ANNUAL	TMA	5	
TMA	422338	5414363	0.75625	380.16	380.16	0	ANNUAL	TMA	5	
TMA	422178	5414263	0.75324	385.44	385.44	0	ANNUAL	TMA	5	
TMA	422298	5414343	0.75231	381.76	381.76	0	ANNUAL	TMA	5	

TMA	422258	5414323	0.75113	382.7	382.7	0	ANNUAL	TMA	5
TMA	422198	5414283	0.74892	384.83	384.83	0	ANNUAL	TMA	5
TMA	422318	5414363	0.74644	381	381	0	ANNUAL	TMA	5
TMA	422358	5414383	0.74633	380	380	0	ANNUAL	TMA	5
TMA	422218	5414303	0.74617	383.99	383.99	0	ANNUAL	TMA	5
TMA	422278	5414343	0.74514	382.07	382.07	0	ANNUAL	TMA	5
TMA	422158	5414263	0.74261	385.98	385.98	0	ANNUAL	TMA	5
TMA	422138	5414243	0.7414	387	387	0	ANNUAL	TMA	5
TMA	422338	5414383	0.74035	380.18	380.18	0	ANNUAL	TMA	5
TMA	422238	5414323	0.73866	383.67	383.67	0	ANNUAL	TMA	5
TMA	422178	5414283	0.73691	385.56	385.56	0	ANNUAL	TMA	5
TMA	422298	5414363	0.73673	381.78	381.78	0	ANNUAL	TMA	5
TMA	422258	5414343	0.73261	383.15	383.15	0	ANNUAL	TMA	5
TMA	422118	5414243	0.73124	387.45	387.45	0	ANNUAL	TMA	5
TMA	422318	5414383	0.73109	381	381	0	ANNUAL	TMA	5
TMA	422358	5414403	0.73083	380	380	0	ANNUAL	TMA	5
TMA	422198	5414303	0.73081	385.17	385.17	0	ANNUAL	TMA	5
TMA	422278	5414363	0.72986	382.09	382.09	0	ANNUAL	TMA	5
TMA	422218	5414323	0.72698	384.5	384.5	0	ANNUAL	TMA	5
TMA	422138	5414263	0.72521	387.14	387.14	0	ANNUAL	TMA	5
TMA	422338	5414403	0.72488	380.23	380.23	0	ANNUAL	TMA	5
TMA	422238	5414343	0.72283	383.81	383.81	0	ANNUAL	TMA	5
TMA	422298	5414383	0.7217	381.8	381.8	0	ANNUAL	TMA	5
TMA	422158	5414283	0.72103	386.65	386.65	0	ANNUAL	TMA	5
TMA	422318	5414403	0.71629	381	381	0	ANNUAL	TMA	5
TMA	422258	5414363	0.71624	383.4	383.4	0	ANNUAL	TMA	5
TMA	422178	5414303	0.71623	386.2	386.2	0	ANNUAL	TMA	5
TMA	422358	5414423	0.71586	380	380	0	ANNUAL	TMA	5
TMA	422198	5414323	0.71539	385.29	385.29	0	ANNUAL	TMA	5
TMA	422278	5414383	0.71511	382.11	382.11	0	ANNUAL	TMA	5
TMA	422098	5414243	0.71103	388.74	388.74	0	ANNUAL	TMA	5
TMA	422218	5414343	0.7086	385	385	0	ANNUAL	TMA	5
TMA	422298	5414403	0.70725	381.81	381.81	0	ANNUAL	TMA	5
TMA	422238	5414363	0.70722	384	384	0	ANNUAL	TMA	5
TMA	422118	5414263	0.70695	388.33	388.33	0	ANNUAL	TMA	5
TMA	422338	5414423	0.7069	380.92	380.92	0	ANNUAL	TMA	5
MINE	422330	5414423	0.70484	380.97	380.97	0	ANNUAL	TMA	5
TMA	422138	5414283	0.70426	387.78	387.78	0	ANNUAL	TMA	5
TMA	422158	5414303	0.704	386.96	386.96	0	ANNUAL	TMA	5
TMA	422078	5414243	0.70227	389.07	389.07	0	ANNUAL	TMA	5
TMA	422258	5414383	0.70213	383.41	383.41	0	ANNUAL	TMA	5
TMA	422318	5414423	0.70198	381	381	0	ANNUAL	TMA	5
TMA	422358	5414443	0.7014	380	380	0	ANNUAL	TMA	5
TMA	422278	5414403	0.70092	382.12	382.12	0	ANNUAL	TMA	5
TMA	422198	5414343	0.69925	385.56	385.56	0	ANNUAL	TMA	5
TMA	422178	5414323	0.69866	386.6	386.6	0	ANNUAL	TMA	5
TMA	422218	5414363	0.69488	385.01	385.01	0	ANNUAL	TMA	5
TMA	422098	5414263	0.69482	388.97	388.97	0	ANNUAL	TMA	5
TMA	422238	5414383	0.69353	384	384	0	ANNUAL	TMA	5

Discrete R	X	Y	Concentra	Elevation	Hill Heigh	Flagpole (	Averagin	Source Gr	Rank	Net ID
	422377	5414238	1.56705	379	379	0	MONTH	TMA	1ST	
TMA	422358	5414243	1.54719	379.1	379.1	0	MONTH	TMA	1ST	
TMA	422338	5414243	1.52054	380	380	0	MONTH	TMA	1ST	
TMA	422318	5414243	1.51095	380	380	0	MONTH	TMA	1ST	
TMA	422358	5414263	1.50328	379.76	379.76	0	MONTH	TMA	1ST	
TMA	422298	5414243	1.50042	380.07	380.07	0	MONTH	TMA	1ST	
TMA	422278	5414243	1.49115	380.09	380.09	0	MONTH	TMA	1ST	
TMA	422338	5414263	1.48934	380	380	0	MONTH	TMA	1ST	
TMA	422318	5414263	1.48014	380	380	0	MONTH	TMA	1ST	
TMA	422358	5414283	1.46911	379.97	379.97	0	MONTH	TMA	1ST	
TMA	422258	5414243	1.46491	381.02	381.02	0	MONTH	TMA	1ST	
TMA	422338	5414283	1.45941	380	380	0	MONTH	TMA	1ST	
TMA	422298	5414263	1.45914	380.67	380.67	0	MONTH	TMA	1ST	
TMA	422278	5414263	1.44526	380.96	380.96	0	MONTH	TMA	1ST	
TMA	422318	5414283	1.44492	380.33	380.33	0	MONTH	TMA	1ST	
TMA	422238	5414243	1.44353	381.67	381.67	0	MONTH	TMA	1ST	
TMA	422358	5414303	1.43948	380	380	0	MONTH	TMA	1ST	
TMA	422258	5414263	1.4308	381.29	381.29	0	MONTH	TMA	1ST	
TMA	422338	5414303	1.42933	380.08	380.08	0	MONTH	TMA	1ST	
TMA	422298	5414283	1.4254	380.95	380.95	0	MONTH	TMA	1ST	
TMA	422278	5414283	1.41621	381.01	381.01	0	MONTH	TMA	1ST	
TMA	422358	5414323	1.41145	380	380	0	MONTH	TMA	1ST	
TMA	422218	5414243	1.40835	382.91	382.91	0	MONTH	TMA	1ST	
TMA	422318	5414303	1.40819	380.83	380.83	0	MONTH	TMA	1ST	
TMA	422338	5414323	1.40104	380.12	380.12	0	MONTH	TMA	1ST	
TMA	422298	5414303	1.39713	381	381	0	MONTH	TMA	1ST	
TMA	422238	5414263	1.39705	382.55	382.55	0	MONTH	TMA	1ST	
TMA	422198	5414243	1.39277	383.26	383.26	0	MONTH	TMA	1ST	
TMA	422258	5414283	1.39207	381.87	381.87	0	MONTH	TMA	1ST	
TMA	422358	5414343	1.38446	380	380	0	MONTH	TMA	1ST	
TMA	422218	5414263	1.37998	382.99	382.99	0	MONTH	TMA	1ST	
TMA	422318	5414323	1.37852	381	381	0	MONTH	TMA	1ST	
TMA	422278	5414303	1.37681	381.69	381.69	0	MONTH	TMA	1ST	
TMA	422338	5414343	1.37409	380.14	380.14	0	MONTH	TMA	1ST	
TMA	422238	5414283	1.36916	382.63	382.63	0	MONTH	TMA	1ST	
TMA	422298	5414323	1.36365	381.41	381.41	0	MONTH	TMA	1ST	
TMA	422258	5414303	1.35901	382.23	382.23	0	MONTH	TMA	1ST	
TMA	422358	5414363	1.35846	380	380	0	MONTH	TMA	1ST	
	420767	5413450	1.35376	375	375	0	MONTH	TMA	1ST	
TMA	422178	5414243	1.3535	384.56	384.56	0	MONTH	TMA	1ST	
TMA	422318	5414343	1.35275	381	381	0	MONTH	TMA	1ST	
TMA	422338	5414363	1.34811	380.16	380.16	0	MONTH	TMA	1ST	
TMA	422198	5414263	1.34614	384.14	384.14	0	MONTH	TMA	1ST	
TMA	422278	5414323	1.34497	382.03	382.03	0	MONTH	TMA	1ST	
TMA	422218	5414283	1.33782	383.74	383.74	0	MONTH	TMA	1ST	
TMA	422358	5414383	1.33345	380	380	0	MONTH	TMA	1ST	
TMA	422298	5414343	1.3324	381.76	381.76	0	MONTH	TMA	1ST	
TMA	422238	5414303	1.32983	383.31	383.31	0	MONTH	TMA	1ST	

TMA	422318	5414363	1.32786	381	381	0	MONTH	TMA	1ST
TMA	422258	5414323	1.32504	382.7	382.7	0	MONTH	TMA	1ST
TMA	422338	5414383	1.32311	380.18	380.18	0	MONTH	TMA	1ST
TMA	422278	5414343	1.31969	382.07	382.07	0	MONTH	TMA	1ST
TMA	422158	5414243	1.31227	385.84	385.84	0	MONTH	TMA	1ST
TMA	422358	5414403	1.30943	380	380	0	MONTH	TMA	1ST
TMA	422218	5414303	1.30828	383.99	383.99	0	MONTH	TMA	1ST
TMA	422298	5414363	1.30792	381.78	381.78	0	MONTH	TMA	1ST
TMA	422178	5414263	1.30653	385.44	385.44	0	MONTH	TMA	1ST
TMA	422198	5414283	1.30543	384.83	384.83	0	MONTH	TMA	1ST
TMA	422318	5414383	1.30386	381	381	0	MONTH	TMA	1ST
TMA	422338	5414403	1.2987	380.23	380.23	0	MONTH	TMA	1ST
TMA	422238	5414323	1.29854	383.67	383.67	0	MONTH	TMA	1ST
TMA	422278	5414363	1.29561	382.09	382.09	0	MONTH	TMA	1ST
TMA	422258	5414343	1.29262	383.15	383.15	0	MONTH	TMA	1ST
TMA	422358	5414423	1.28633	380	380	0	MONTH	TMA	1ST
TMA	422158	5414263	1.28571	385.98	385.98	0	MONTH	TMA	1ST
TMA	422298	5414383	1.2843	381.8	381.8	0	MONTH	TMA	1ST
TMA	422178	5414283	1.28077	385.56	385.56	0	MONTH	TMA	1ST
TMA	422318	5414403	1.28077	381	381	0	MONTH	TMA	1ST
TMA	422198	5414303	1.27453	385.17	385.17	0	MONTH	TMA	1ST
TMA	422218	5414323	1.27416	384.5	384.5	0	MONTH	TMA	1ST
TMA	422238	5414343	1.27289	383.81	383.81	0	MONTH	TMA	1ST
TMA	422138	5414243	1.27281	387	387	0	MONTH	TMA	1ST
TMA	422278	5414383	1.27237	382.11	382.11	0	MONTH	TMA	1ST
TMA	422338	5414423	1.26686	380.92	380.92	0	MONTH	TMA	1ST
TMA	422258	5414363	1.26519	383.4	383.4	0	MONTH	TMA	1ST
TMA	422358	5414443	1.26406	380	380	0	MONTH	TMA	1ST
MINE	422330	5414423	1.26327	380.97	380.97	0	MONTH	TMA	1ST
TMA	422298	5414403	1.26173	381.81	381.81	0	MONTH	TMA	1ST
TMA	422318	5414423	1.25858	381	381	0	MONTH	TMA	1ST
TMA	422118	5414243	1.25336	387.45	387.45	0	MONTH	TMA	1ST
TMA	422278	5414403	1.25014	382.12	382.12	0	MONTH	TMA	1ST
TMA	422198	5414323	1.24996	385.29	385.29	0	MONTH	TMA	1ST
TMA	420728	5413493	1.24792	376	376	0	MONTH	TMA	1ST
TMA	422138	5414263	1.24757	387.14	387.14	0	MONTH	TMA	1ST
TMA	422238	5414363	1.24715	384	384	0	MONTH	TMA	1ST
TMA	422158	5414283	1.24619	386.65	386.65	0	MONTH	TMA	1ST
TMA	422338	5414443	1.24425	381	381	0	MONTH	TMA	1ST
TMA	422258	5414383	1.24323	383.41	383.41	0	MONTH	TMA	1ST
TMA	422178	5414303	1.24296	386.2	386.2	0	MONTH	TMA	1ST
TMA	422218	5414343	1.24137	385	385	0	MONTH	TMA	1ST
TMA	422298	5414423	1.23989	381.83	381.83	0	MONTH	TMA	1ST
TMA	422318	5414443	1.23723	381	381	0	MONTH	TMA	1ST
TMA	422278	5414423	1.22863	382.14	382.14	0	MONTH	TMA	1ST
TMA	422238	5414383	1.226	384	384	0	MONTH	TMA	1ST
TMA	422198	5414343	1.22284	385.56	385.56	0	MONTH	TMA	1ST
TMA	422258	5414403	1.22187	383.43	383.43	0	MONTH	TMA	1ST
TMA	422218	5414363	1.22033	385.01	385.01	0	MONTH	TMA	1ST

*** THE MAXIMUM 100 24-HR AVERAGE CONCENTRATION VALUES FOR SOURCE GROUP: UNL_NPAG ***

RANK BY	YEAR	RANK	CONC	YYYYMM	XR	YR	TYPE	Ontario Reg. 419/05
1	1996	7	11.7393	2E+09	422928	5408593	DC	Discarded
1	1997	25	10.3818	2E+09	423418	5408569	DC	Discarded
1	1998	2	13.1337	2E+09	423611	5408569	DC	Discarded
1	1999	3	12.6575	2E+09	423328	5408593	DC	Discarded
1	2000	1	14.1265	2E+09	422928	5408593	DC	Discarded
2	1996	45	9.60458	2E+09	422930	5408423	DC	Discarded
2	1997	33	9.95123	2E+09	423899	5408569	DC	
2	1998	6	11.866	2E+09	423707	5408569	DC	Discarded
2	1999	4	12.3517	2E+09	423322	5408569	DC	Discarded
2	2000	5	12.0219	2E+09	423515	5408569	DC	Highest
3	1996	47	9.55976	2E+09	423128	5408593	DC	Discarded
3	1997	59	9.15284	2E+09	423803	5408569	DC	
3	1998	8	11.53	2E+09	423611	5408471	DC	Discarded
3	1999	13	11.0246	2E+09	423322	5408471	DC	Discarded
3	2000	9	11.2945	2E+09	422930	5408423	DC	
4	1996	57	9.28413	2E+09	422928	5408393	DC	Discarded
4	1997	61	9.14187	2E+09	423418	5408471	DC	
4	1998	11	11.2233	2E+09	423707	5408471	DC	Discarded
4	1999	16	10.8273	2E+09	423803	5408569	DC	
4	2000	10	11.2917	2E+09	422928	5408593	DC	
5	1996	63	9.09592	2E+09	423226	5408569	DC	
5	1997	76	8.96934	2E+09	423328	5408593	DC	
5	1998	17	10.8135	2E+09	422528	5408593	DC	
5	1999	27	10.1717	2E+09	423226	5408569	DC	
5	2000	12	11.0571	2E+09	423611	5408569	DC	
6	1996	67	9.06685	2E+09	423130	5408569	DC	
6	1997	81	8.88895	2E+09	423322	5408569	DC	
6	1998	18	10.8031	2E+09	423515	5408569	DC	
6	1999	30	10.1102	2E+09	423328	5408393	DC	
6	2000	14	10.9125	2E+09	423128	5408593	DC	
7	1996	83	8.80229	2E+09	422728	5408593	DC	
7	1997	82	8.84631	2E+09	423899	5408471	DC	
7	1998	21	10.4855	2E+09	423803	5408569	DC	
7	1999	31	10.0565	2E+09	423803	5408471	DC	
7	2000	15	10.8469	2E+09	422928	5408393	DC	
8	1996	91	8.68304	2E+09	422730	5408423	DC	
8	1998	23	10.4332	2E+09	423707	5408372	DC	
8	1999	34	9.90826	2E+09	423707	5408569	DC	
8	2000	19	10.8031	2E+09	423611	5408471	DC	
9	1998	24	10.3944	2E+09	423728	5408393	DC	
9	1999	35	9.88517	2E+09	423322	5408372	DC	
9	2000	20	10.57	2E+09	423226	5408569	DC	
10	1998	26	10.1728	2E+09	423899	5408569	DC	
10	1999	37	9.87594	2E+09	423418	5408569	DC	
10	2000	22	10.4685	2E+09	423130	5408569	DC	
11	1998	32	10.0474	2E+09	423611	5408372	DC	

11	1999	44	9.62887	2E+09	424380	5408573	DC
11	2000	28	10.1711	2E+09	423611	5408372	DC
12	1998	38	9.77982	2E+09	422328	5408593	DC
12	1999	46	9.5662	2E+09	424430	5408573	DC
12	2000	29	10.169	2E+09	423515	5408471	DC
13	1998	39	9.73996	2E+09	422330	5408423	DC
13	1999	52	9.38491	2E+09	424284	5408569	DC
13	2000	36	9.87725	2E+09	423128	5408593	DC
14	1998	43	9.64817	2E+09	423899	5408471	DC
14	1999	54	9.32911	2E+09	424480	5408573	DC
14	2000	40	9.65684	2E+09	422730	5408423	DC
15	1998	48	9.51022	2E+09	423707	5408273	DC
15	1999	58	9.19954	2E+09	424499	5408579	DC
15	2000	41	9.65535	2E+09	422728	5408593	DC
16	1998	51	9.42059	2E+09	422928	5408593	DC
16	1999	60	9.14502	2E+09	423226	5408471	DC
16	2000	42	9.65107	2E+09	423130	5408569	DC
17	1998	53	9.36522	2E+09	422328	5408393	DC
17	1999	62	9.13296	2E+09	423418	5408471	DC
17	2000	49	9.48888	2E+09	422728	5408393	DC
18	1998	64	9.09355	2E+09	423803	5408471	DC
18	1999	69	9.03472	2E+09	424430	5408523	DC
18	2000	50	9.45723	2E+09	423226	5408471	DC
19	1998	68	9.04694	2E+09	423803	5408372	DC
19	1999	70	9.03314	2E+09	422528	5408593	DC
19	2000	55	9.31628	2E+09	423528	5408393	DC
20	1998	78	8.93107	2E+09	423803	5408569	DC
20	1999	73	8.99213	2E+09	424380	5408523	DC
20	2000	56	9.28861	2E+09	423611	5408273	DC
21	1998	80	8.92215	2E+09	423928	5408393	DC
21	1999	74	8.98585	2E+09	424480	5408523	DC
21	2000	65	9.08043	2E+09	423322	5408569	DC
22	1998	84	8.78612	2E+09	422328	5408593	DC
22	1999	79	8.92802	2E+09	423322	5408273	DC
22	2000	66	9.0766	2E+09	422528	5408593	DC
23	1998	86	8.7605	2E+09	423515	5408471	DC
23	1999	88	8.7272	2E+09	423899	5408372	DC
23	2000	71	9.01481	2E+09	423130	5408471	DC
24	1998	87	8.751	2E+09	423728	5408193	DC
24	1999	96	8.63019	2E+09	423803	5408372	DC
24	2000	72	9.01309	2E+09	423328	5408593	DC
25	1998	89	8.69063	2E+09	423803	5408273	DC
25	2000	75	8.98332	2E+09	423128	5408593	DC
26	1998	92	8.67975	2E+09	423611	5408273	DC
26	2000	77	8.95569	2E+09	422728	5408593	DC
27	1998	97	8.61888	2E+09	423722	5408177	DC
27	2000	85	8.7733	2E+09	422730	5408423	DC
28	2000	90	8.68952	2E+09	422928	5408593	DC
29	2000	93	8.66947	2E+09	423130	5408569	DC

*** THE MAXIMUM 100 24-HR AVERAGE CONCENTRATION VALUES FOR SOURCE GROUP: UNL_OB ***

RANK BY	YEAR	RANK	CONC	YYYYMM	XR	YR	TYPE	Ontario Reg. 419/05
1	1996	5	4.99208	2E+09	427130	5414223	DC	Discarded
1	1997	1	5.47868	2E+09	425728	5414193	DC	Discarded
1	1998	28	4.0125	2E+09	423226	5408569	DC	Discarded
1	1999	51	3.77464	2E+09	422158	5414243	DC	Discarded
1	2000	12	4.45635	2E+09	426330	5414223	DC	Discarded
2	1996	6	4.9327	2E+09	426928	5414193	DC	Discarded
2	1997	2	5.45068	2E+09	425730	5414223	DC	Discarded
2	1998	33	3.94541	2E+09	423130	5408569	DC	Discarded
2	1999	52	3.7722	2E+09	426528	5414193	DC	
2	2000	15	4.43186	2E+09	426328	5414193	DC	Discarded
3	1996	7	4.9171	2E+09	427128	5414193	DC	Discarded
3	1997	3	5.14346	2E+09	425728	5414393	DC	Discarded
3	1998	34	3.94038	2E+09	423128	5408593	DC	Discarded
3	1999	53	3.76953	2E+09	422138	5414243	DC	
3	2000	17	4.31961	2E+09	424188	5408569	DC	
4	1996	8	4.84338	2E+09	427128	5414393	DC	Discarded
4	1997	4	5.06473	2E+09	425730	5414423	DC	Discarded
4	1998	43	3.81048	2E+09	423130	5408471	DC	Discarded
4	1999	56	3.75226	2E+09	422178	5414243	DC	
4	2000	18	4.30228	2E+09	426328	5414393	DC	
5	1996	9	4.7392	2E+09	426930	5414223	DC	Discarded
5	1997	11	4.54355	2E+09	425530	5414223	DC	Highest
5	1998	45	3.80647	2E+09	423328	5408593	DC	Discarded
5	1999	58	3.74442	2E+09	426530	5414223	DC	
5	2000	21	4.2356	2E+09	424284	5408569	DC	
6	1996	10	4.73163	2E+09	427130	5414423	DC	Discarded
6	1997	14	4.43422	2E+09	425728	5414593	DC	
6	1998	70	3.70782	2E+09	423322	5408569	DC	Discarded
6	1999	59	3.74425	2E+09	422138	5414263	DC	
6	2000	22	4.2184	2E+09	426330	5414423	DC	
7	1996	13	4.43687	2E+09	427330	5414623	DC	Discarded
7	1997	16	4.33011	2E+09	425730	5414623	DC	
7	1998	85	3.64775	2E+09	426128	5414193	DC	
7	1999	60	3.74035	2E+09	422118	5414243	DC	
7	2000	25	4.08941	2E+09	424092	5408569	DC	
8	1996	19	4.28431	2E+09	425928	5414193	DC	Discarded
8	1997	23	4.15498	2E+09	425528	5414393	DC	
8	1998	94	3.62631	2E+09	423226	5408471	DC	
8	1999	63	3.7315	2E+09	422158	5414263	DC	
8	2000	27	4.07422	2E+09	424188	5408471	DC	
9	1996	20	4.23957	2E+09	425930	5414223	DC	Discarded
9	1997	26	4.0884	2E+09	425530	5414423	DC	
9	1999	65	3.73032	2E+09	422118	5414263	DC	
9	2000	32	3.95799	2E+09	424092	5408471	DC	
10	1996	24	4.10134	2E+09	427330	5414423	DC	Discarded
10	1997	29	3.99008	2E+09	425928	5414993	DC	

10	1999	69	3.70805	2E+09	422118	5414283	DC	
10	2000	35	3.9273	2E+09	424380	5408573	DC	
11	1996	30	3.96531	2E+09	427530	5414823	DC	Discarded
11	1997	31	3.96235	2E+09	425930	5415023	DC	
11	1999	72	3.70319	2E+09	422138	5414283	DC	
11	2000	36	3.91309	2E+09	424284	5408471	DC	
12	1996	48	3.78519	2E+09	427330	5414823	DC	Discarded
12	1997	37	3.91234	2E+09	425930	5414823	DC	
12	1999	73	3.70315	2E+09	422198	5414243	DC	
12	2000	38	3.9019	2E+09	423995	5408569	DC	
13	1996	49	3.78332	2E+09	427128	5414593	DC	Discarded
13	1997	39	3.89424	2E+09	425928	5414793	DC	
13	1999	75	3.69689	2E+09	422178	5414263	DC	
13	2000	40	3.8775	2E+09	424128	5408393	DC	
14	1996	50	3.77931	2E+09	424430	5408573	DC	
14	1997	44	3.80975	2E+09	425928	5415193	DC	
14	1999	76	3.69432	2E+09	422098	5414263	DC	
14	2000	41	3.84719	2E+09	425530	5414223	DC	
15	1996	57	3.7498	2E+09	424480	5408573	DC	
15	1997	62	3.73357	2E+09	427530	5414223	DC	
15	1999	77	3.68631	2E+09	422098	5414283	DC	
15	2000	42	3.81739	2E+09	424188	5408372	DC	
16	1996	64	3.73136	2E+09	427530	5415023	DC	
16	1999	78	3.68425	2E+09	422098	5414243	DC	
16	2000	46	3.79408	2E+09	424092	5408569	DC	
17	1996	66	3.72679	2E+09	425928	5414393	DC	
17	1999	80	3.675	2E+09	422158	5414283	DC	
17	2000	47	3.79291	2E+09	424092	5408372	DC	
18	1996	67	3.72304	2E+09	424499	5408579	DC	
18	1999	83	3.66817	2E+09	422118	5414303	DC	
18	2000	54	3.75924	2E+09	424380	5408523	DC	
19	1996	71	3.70545	2E+09	424380	5408573	DC	
19	1999	84	3.66533	2E+09	422098	5414303	DC	
19	2000	55	3.75296	2E+09	426128	5414193	DC	
20	1996	82	3.66891	2E+09	424430	5408523	DC	
20	1999	86	3.64762	2E+09	422138	5414303	DC	
20	2000	61	3.73611	2E+09	424430	5408573	DC	
21	1996	97	3.62087	2E+09	424480	5408523	DC	
21	1999	87	3.64696	2E+09	422078	5414283	DC	
21	2000	68	3.715	2E+09	426528	5414793	DC	
22	1996	100	3.61447	2E+09	425930	5414423	DC	
22	1999	88	3.64657	2E+09	422078	5414303	DC	
22	2000	74	3.69705	2E+09	423995	5408471	DC	
23	1999	89	3.64377	2E+09	422218	5414243	DC	
23	2000	79	3.67791	2E+09	426530	5414823	DC	
24	1999	90	3.63527	2E+09	422198	5414263	DC	
24	2000	81	3.66908	2E+09	423995	5408569	DC	
25	1999	91	3.63353	2E+09	422078	5414263	DC	
25	2000	98	3.61772	2E+09	424092	5408273	DC	

*** THE MAXIMUM 100 1-HR AVERAGE CONCENTRATION VALUES FOR SOURCE GROUP: WMRS ***

RANK BY	YEAR	RANK	CONC	YYYYMM	XR	YR	TYPE	Ontario Reg. 419/05
1	1996	82	54.6039	2E+09	424188	5408569	DC	Discarded
1	1997	2	60.5686	2E+09	423128	5408593	DC	Discarded
1	1998	1	60.7666	2E+09	423128	5408593	DC	Discarded
1	1999	16	58.3102	2E+09	423707	5408569	DC	Discarded
1	2000	7	59.7832	2E+09	423128	5408593	DC	Discarded
2	1997	4	59.9963	2E+09	423130	5408569	DC	Discarded
2	1998	3	60.1365	2E+09	423128	5408593	DC	Discarded
2	1999	25	57.771	2E+09	423418	5408569	DC	Discarded
2	2000	9	59.3056	2E+09	423130	5408569	DC	Discarded
3	1997	10	59.2272	2E+09	422928	5408593	DC	Discarded
3	1998	5	59.9579	2E+09	423130	5408569	DC	Discarded
3	1999	36	56.7153	2E+09	423611	5408569	DC	Discarded
3	2000	12	58.4897	2E+09	423128	5408593	DC	Discarded
4	1997	11	58.8194	2E+09	422728	5408593	DC	Discarded
4	1998	6	59.9049	2E+09	422928	5408593	DC	Discarded
4	1999	37	56.6767	2E+09	423707	5408471	DC	Discarded
4	2000	17	58.2753	2E+09	423226	5408569	DC	Discarded
5	1997	13	58.4805	2E+09	422528	5408593	DC	Discarded
5	1998	8	59.3145	2E+09	423130	5408569	DC	Discarded
5	1999	43	56.323	2E+09	423515	5408569	DC	Discarded
5	2000	18	58.1884	2E+09	423130	5408569	DC	Discarded
6	1997	14	58.4469	2E+09	423707	5408569	DC	Discarded
6	1998	15	58.4198	2E+09	423328	5408593	DC	Discarded
6	1999	54	55.6354	2E+09	423728	5408393	DC	Discarded
6	2000	26	57.6438	2E+09	423803	5408569	DC	Discarded
7	1997	21	57.8956	2E+09	423418	5408569	DC	Discarded
7	1998	19	58.0546	2E+09	423322	5408569	DC	Discarded
7	1999	56	55.5621	2E+09	423995	5408569	DC	Discarded
7	2000	30	57.2947	2E+09	423803	5408569	DC	Discarded
8	1997	22	57.8375	2E+09	423515	5408569	DC	Discarded
8	1998	20	57.9174	2E+09	423707	5408569	DC	Discarded
8	1999	68	55.1422	2E+09	423707	5408372	DC	Discarded
8	2000	35	56.8396	2E+09	423707	5408569	DC	Discarded
9	1997	23	57.7964	2E+09	423515	5408569	DC	Discarded
9	1998	24	57.7865	2E+09	423418	5408569	DC	Discarded
9	1999	69	55.1355	2E+09	423418	5408471	DC	Discarded
9	2000	38	56.5387	2E+09	423130	5408471	DC	Discarded
10	1997	27	57.4916	2E+09	423803	5408569	DC	Discarded
10	1998	44	56.0662	2E+09	423130	5408471	DC	Discarded
10	1999	81	54.6172	2E+09	423328	5408593	DC	Discarded
10	2000	39	56.5213	2E+09	423226	5408569	DC	Discarded
11	1997	28	57.3944	2E+09	423418	5408569	DC	Highest
11	1998	48	55.8771	2E+09	423707	5408471	DC	Discarded
11	1999	92	54.2919	2E+09	423803	5408569	DC	Discarded
11	2000	47	55.9197	2E+09	423130	5408471	DC	Discarded
12	1997	29	57.3843	2E+09	423899	5408569	DC	

12	1998	51	55.7903	2E+09	424092	5408569	DC	Discarded
12	1999	98	54.0699	2E+09	423515	5408471	DC	Discarded
12	2000	50	55.7991	2E+09	423803	5408471	DC	Discarded
13	1997	31	57.2916	2E+09	423515	5408569	DC	
13	1998	52	55.7506	2E+09	423322	5408471	DC	Discarded
13	2000	63	55.3546	2E+09	423226	5408471	DC	Discarded
14	1997	32	57.0403	2E+09	423707	5408569	DC	
14	1998	58	55.4141	2E+09	423130	5408471	DC	Discarded
14	2000	66	55.2951	2E+09	423803	5408471	DC	Discarded
15	1997	33	56.9766	2E+09	422528	5408593	DC	
15	1998	65	55.3148	2E+09	423803	5408569	DC	Discarded
15	2000	77	54.7684	2E+09	423899	5408569	DC	Discarded
16	1997	34	56.905	2E+09	423130	5408471	DC	
16	1998	70	55.0655	2E+09	423418	5408471	DC	Discarded
16	2000	88	54.4105	2E+09	423803	5408372	DC	Discarded
17	1997	40	56.5192	2E+09	423995	5408569	DC	
17	1998	75	54.8575	2E+09	423611	5408569	DC	Discarded
17	2000	89	54.3441	2E+09	423128	5408393	DC	Discarded
18	1997	41	56.4585	2E+09	423611	5408569	DC	
18	1998	76	54.8203	2E+09	423728	5408393	DC	Discarded
18	2000	93	54.2789	2E+09	423899	5408471	DC	Discarded
19	1997	42	56.4297	2E+09	423707	5408471	DC	
19	1998	79	54.6408	2E+09	422928	5408593	DC	Discarded
19	2000	94	54.2338	2E+09	423707	5408569	DC	Discarded
20	1997	45	56.0029	2E+09	423803	5408471	DC	
20	1998	84	54.4896	2E+09	423803	5408471	DC	Discarded
20	2000	96	54.2018	2E+09	424188	5408569	DC	Discarded
21	1997	46	55.9925	2E+09	424092	5408569	DC	
21	1998	90	54.3083	2E+09	424284	5408569	DC	Discarded
21	2000	97	54.0842	2E+09	423128	5408393	DC	Discarded
22	1997	49	55.877	2E+09	423803	5408569	DC	
22	1998	100	54.0358	2E+09	424188	5408569	DC	Discarded
23	1997	53	55.7249	2E+09	423226	5408569	DC	
24	1997	55	55.5688	2E+09	423515	5408471	DC	
25	1997	57	55.5406	2E+09	423803	5408569	DC	
26	1997	59	55.3972	2E+09	423728	5408393	DC	
27	1997	60	55.3951	2E+09	423611	5408569	DC	
28	1997	61	55.385	2E+09	423899	5408471	DC	
29	1997	62	55.3691	2E+09	423515	5408471	DC	
30	1997	64	55.3439	2E+09	423899	5408569	DC	
31	1997	67	55.1804	2E+09	423418	5408471	DC	
32	1997	71	55.0633	2E+09	423803	5408471	DC	
33	1997	72	55.0597	2E+09	423995	5408569	DC	
34	1997	73	55.0527	2E+09	423515	5408471	DC	
35	1997	74	54.8615	2E+09	423995	5408471	DC	
36	1997	78	54.6721	2E+09	423418	5408471	DC	
37	1997	80	54.6345	2E+09	423803	5408372	DC	
38	1997	83	54.6027	2E+09	423611	5408471	DC	
39	1997	85	54.4617	2E+09	423128	5408393	DC	

*** THE MAXIMUM 100 24-HR AVERAGE CONCENTRATION VALUES FOR SOURCE GROUP: WMRS ***

RANK BY	YEAR	RANK	CONC	YYYYMM	XR	YR	TYPE	Ontario Reg. 419/05
1	1996	18	8.61172	2E+09	422928	5408593	DC	Discarded
1	1998	7	9.18636	2E+09	423899	5408569	DC	Discarded
1	1999	1	9.83955	2E+09	423515	5408569	DC	Discarded
1	2000	2	9.83657	2E+09	423128	5408593	DC	Discarded
2	1996	20	8.58259	2E+09	423128	5408593	DC	Discarded
2	1998	8	9.00442	2E+09	423803	5408569	DC	Discarded
2	1999	4	9.49011	2E+09	423418	5408569	DC	Discarded
2	2000	3	9.61589	2E+09	423130	5408569	DC	Discarded
3	1996	24	8.35756	2E+09	423130	5408569	DC	Discarded
3	1998	11	8.80805	2E+09	423995	5408569	DC	Discarded
3	1999	5	9.3847	2E+09	423611	5408569	DC	Discarded
3	2000	9	8.95878	2E+09	422928	5408593	DC	Discarded
4	1996	49	7.6713	2E+09	422930	5408423	DC	Discarded
4	1998	21	8.57073	2E+09	423899	5408471	DC	Discarded
4	1999	6	9.2057	2E+09	423515	5408471	DC	Discarded
4	2000	12	8.78727	2E+09	423226	5408569	DC	Discarded
5	1996	54	7.50341	2E+09	423130	5408471	DC	Discarded
5	1998	25	8.3413	2E+09	423995	5408471	DC	Discarded
5	1999	10	8.85158	2E+09	423418	5408471	DC	Discarded
5	2000	15	8.72855	2E+09	423130	5408471	DC	Discarded
6	1996	55	7.49313	2E+09	422928	5408393	DC	Discarded
6	1998	27	8.27002	2E+09	423803	5408471	DC	Discarded
6	1999	13	8.77965	2E+09	423611	5408471	DC	Discarded
6	2000	16	8.70608	2E+09	422928	5408593	DC	Highest
7	1996	74	7.27185	2E+09	423226	5408569	DC	Discarded
7	1998	29	8.22418	2E+09	423707	5408569	DC	Discarded
7	1999	14	8.74432	2E+09	423528	5408393	DC	Discarded
7	2000	22	8.41347	2E+09	423128	5408593	DC	
8	1998	33	8.14587	2E+09	423928	5408393	DC	Discarded
8	1999	17	8.63201	2E+09	423515	5408372	DC	Discarded
8	2000	31	8.19401	2E+09	422930	5408423	DC	
9	1998	36	8.05741	2E+09	424092	5408569	DC	Discarded
9	1999	19	8.59481	2E+09	423328	5408593	DC	Discarded
9	2000	32	8.17305	2E+09	423130	5408569	DC	
10	1998	38	8.03013	2E+09	423899	5408372	DC	Discarded
10	1999	23	8.38679	2E+09	423322	5408569	DC	Discarded
10	2000	35	8.09769	2E+09	423128	5408393	DC	
11	1998	41	7.8578	2E+09	423995	5408372	DC	Discarded
11	1999	26	8.28514	2E+09	423418	5408372	DC	Discarded
11	2000	37	8.0303	2E+09	422928	5408393	DC	
12	1998	46	7.7274	2E+09	422528	5408593	DC	
12	1999	28	8.26698	2E+09	423611	5408372	DC	Discarded
12	2000	39	7.93172	2E+09	423130	5408372	DC	
13	1998	48	7.69522	2E+09	424092	5408471	DC	
13	1999	30	8.20639	2E+09	423707	5408569	DC	Discarded
13	2000	40	7.8794	2E+09	423226	5408471	DC	

14	1998	52	7.64136	2E+09	423803	5408372	DC	
14	1999	34	8.12058	2E+09	423515	5408273	DC	Discarded
14	2000	51	7.65579	2E+09	423128	5408593	DC	
15	1998	56	7.48312	2E+09	424188	5408569	DC	
15	1999	42	7.82104	2E+09	423322	5408471	DC	Discarded
15	2000	53	7.5925	2E+09	422930	5408423	DC	
16	1998	61	7.44057	2E+09	423707	5408471	DC	
16	1999	43	7.7983	2E+09	423611	5408273	DC	Discarded
16	2000	59	7.45891	2E+09	423328	5408593	DC	
17	1998	63	7.43665	2E+09	423899	5408273	DC	
17	1999	44	7.78365	2E+09	423418	5408273	DC	Discarded
17	2000	60	7.45612	2E+09	423130	5408569	DC	
18	1998	64	7.39816	2E+09	423995	5408273	DC	
18	1999	45	7.72921	2E+09	423528	5408193	DC	Discarded
18	2000	62	7.43916	2E+09	422928	5408593	DC	
19	1998	71	7.29563	2E+09	424284	5408569	DC	
19	1999	47	7.71429	2E+09	423707	5408471	DC	Discarded
19	2000	65	7.3949	2E+09	422928	5408393	DC	
20	1998	73	7.28717	2E+09	424092	5408372	DC	
20	1999	50	7.66503	2E+09	423525	5408177	DC	Discarded
20	2000	67	7.36549	2E+09	423322	5408569	DC	
21	1998	77	7.23025	2E+09	424092	5408569	DC	
21	1999	57	7.47536	2E+09	423328	5408393	DC	Discarded
21	2000	76	7.26477	2E+09	423130	5408471	DC	
22	1998	85	7.12821	2E+09	424188	5408569	DC	
22	1999	58	7.47348	2E+09	423995	5408569	DC	
22	2000	78	7.22798	2E+09	422728	5408593	DC	
23	1998	86	7.12491	2E+09	423728	5408393	DC	
23	1999	66	7.3824	2E+09	423426	5408177	DC	
23	2000	80	7.21914	2E+09	422728	5408593	DC	
24	1998	89	7.09854	2E+09	423611	5408569	DC	
24	1999	68	7.3044	2E+09	423489	5408106	DC	
24	2000	81	7.21571	2E+09	422930	5408223	DC	
25	1998	91	7.08511	2E+09	424128	5408393	DC	
25	1999	69	7.30298	2E+09	423899	5408569	DC	
25	2000	82	7.19532	2E+09	423130	5408273	DC	
26	1998	95	7.01695	2E+09	423928	5408193	DC	
26	1999	70	7.30238	2E+09	423707	5408372	DC	
26	2000	83	7.1866	2E+09	423226	5408569	DC	
27	1998	98	6.94794	2E+09	424092	5408273	DC	
27	1999	72	7.28853	2E+09	423322	5408372	DC	
27	2000	84	7.1349	2E+09	423803	5408569	DC	
28	1998	100	6.92093	2E+09	423919	5408177	DC	
28	1999	75	7.27087	2E+09	423623	5408177	DC	
28	2000	90	7.09431	2E+09	423128	5408593	DC	
29	1999	79	7.22222	2E+09	423525	5408081	DC	
29	2000	92	7.0819	2E+09	423226	5408372	DC	
30	1999	87	7.10951	2E+09	423728	5408393	DC	
30	2000	93	7.07114	2E+09	422928	5408193	DC	

Discrete F	X	Y	Concentr	Elevation	Hill Heigh	Flagpole (	Averagin	Source Gr	Num Year	Net ID
MINE	424092	5408569	0.48121	347.79	347.79	0	ANNUAL	WMRS	5	
MINE	423995	5408569	0.47979	347.85	347.85	0	ANNUAL	WMRS	5	
MINE	424188	5408569	0.47744	347.04	347.04	0	ANNUAL	WMRS	5	
MINE	423899	5408569	0.47693	348.73	348.73	0	ANNUAL	WMRS	5	
MINE	423803	5408569	0.47306	349.96	349.96	0	ANNUAL	WMRS	5	
MINE	424284	5408569	0.47243	347.79	347.79	0	ANNUAL	WMRS	5	
TMA	423328	5408593	0.46907	349.35	349.35	0	ANNUAL	WMRS	5	
MINE	423707	5408569	0.46742	350.01	350.01	0	ANNUAL	WMRS	5	
MINE	423611	5408569	0.46354	350	350	0	ANNUAL	WMRS	5	
MINE	424380	5408573	0.46351	348	348	0	ANNUAL	WMRS	5	
TMA	423128	5408593	0.46331	352.5	352.5	0	ANNUAL	WMRS	5	
MINE	423515	5408569	0.4612	350	350	0	ANNUAL	WMRS	5	
MINE	423418	5408569	0.45916	350	350	0	ANNUAL	WMRS	5	
MINE	423322	5408569	0.45686	350.13	350.13	0	ANNUAL	WMRS	5	
MINE	424430	5408573	0.45587	348	348	0	ANNUAL	WMRS	5	
MINE	423226	5408569	0.45509	351.25	351.25	0	ANNUAL	WMRS	5	
MINE	423130	5408569	0.45137	353	353	0	ANNUAL	WMRS	5	
MINE	424480	5408573	0.44718	348	348	0	ANNUAL	WMRS	5	
	424499	5408579	0.44609	348	348	0	ANNUAL	WMRS	5	
MINE	424380	5408523	0.44254	348.61	348.61	0	ANNUAL	WMRS	5	
TMA	422928	5408593	0.43794	353	353	0	ANNUAL	WMRS	5	
MINE	424430	5408523	0.43622	348.58	348.58	0	ANNUAL	WMRS	5	
MINE	424092	5408471	0.43224	350	350	0	ANNUAL	WMRS	5	
MINE	424188	5408471	0.43085	349	349	0	ANNUAL	WMRS	5	
MINE	423995	5408471	0.43016	350.49	350.49	0	ANNUAL	WMRS	5	
MINE	424480	5408523	0.42885	348.55	348.55	0	ANNUAL	WMRS	5	
MINE	424284	5408471	0.42784	349	349	0	ANNUAL	WMRS	5	
MINE	423899	5408471	0.42627	351.16	351.16	0	ANNUAL	WMRS	5	
MINE	424380	5408473	0.42218	349	349	0	ANNUAL	WMRS	5	
MINE	423803	5408471	0.42207	352.21	352.21	0	ANNUAL	WMRS	5	
MINE	423707	5408471	0.41735	352.27	352.27	0	ANNUAL	WMRS	5	
MINE	424430	5408473	0.41712	349	349	0	ANNUAL	WMRS	5	
MINE	423611	5408471	0.41297	351.33	351.33	0	ANNUAL	WMRS	5	
MINE	424480	5408473	0.41105	349	349	0	ANNUAL	WMRS	5	
MINE	423515	5408471	0.41078	351	351	0	ANNUAL	WMRS	5	
MINE	423418	5408471	0.40861	350.37	350.37	0	ANNUAL	WMRS	5	
MINE	423322	5408471	0.40823	351	351	0	ANNUAL	WMRS	5	
MINE	423226	5408471	0.40731	352	352	0	ANNUAL	WMRS	5	
TMA	422728	5408593	0.40579	353	353	0	ANNUAL	WMRS	5	
MINE	423130	5408471	0.4046	353.62	353.62	0	ANNUAL	WMRS	5	
MINE	424380	5408423	0.40357	350	350	0	ANNUAL	WMRS	5	
MINE	424430	5408423	0.39956	350	350	0	ANNUAL	WMRS	5	
TMA	424128	5408393	0.39706	350.25	350.25	0	ANNUAL	WMRS	5	
TMA	424328	5408393	0.39498	350.25	350.25	0	ANNUAL	WMRS	5	
MINE	424480	5408423	0.39443	349.87	349.87	0	ANNUAL	WMRS	5	
TMA	423928	5408393	0.3935	353.49	353.49	0	ANNUAL	WMRS	5	
MINE	424284	5408372	0.38869	351	351	0	ANNUAL	WMRS	5	
MINE	424188	5408372	0.38857	350.26	350.26	0	ANNUAL	WMRS	5	

MINE	424092	5408372	0.38794	351.02	351.02	0	ANNUAL	WMRS	5
MINE	423995	5408372	0.3863	352.59	352.59	0	ANNUAL	WMRS	5
MINE	424380	5408373	0.38573	351	351	0	ANNUAL	WMRS	5
TMA	423728	5408393	0.3854	355.6	355.6	0	ANNUAL	WMRS	5
MINE	423899	5408372	0.38389	355.06	355.06	0	ANNUAL	WMRS	5
MINE	424430	5408373	0.38159	350.05	350.05	0	ANNUAL	WMRS	5
MINE	423803	5408372	0.38028	357.44	357.44	0	ANNUAL	WMRS	5
MINE	424480	5408373	0.37756	350	350	0	ANNUAL	WMRS	5
TMA	423528	5408393	0.37729	352	352	0	ANNUAL	WMRS	5
MINE	423707	5408372	0.3759	356.34	356.34	0	ANNUAL	WMRS	5
TMA	422528	5408593	0.37568	354	354	0	ANNUAL	WMRS	5
TMA	423328	5408393	0.3746	351	351	0	ANNUAL	WMRS	5
TMA	423128	5408393	0.37281	354.07	354.07	0	ANNUAL	WMRS	5
MINE	423611	5408372	0.37119	353.6	353.6	0	ANNUAL	WMRS	5
MINE	423515	5408372	0.36827	352	352	0	ANNUAL	WMRS	5
MINE	424380	5408323	0.36795	351.24	351.24	0	ANNUAL	WMRS	5
MINE	422930	5408423	0.36749	354.99	354.99	0	ANNUAL	WMRS	5
MINE	423226	5408372	0.36702	353	353	0	ANNUAL	WMRS	5
MINE	423418	5408372	0.36649	351	351	0	ANNUAL	WMRS	5
MINE	423322	5408372	0.36598	351	351	0	ANNUAL	WMRS	5
MINE	424430	5408323	0.3654	351	351	0	ANNUAL	WMRS	5
MINE	423130	5408372	0.36537	354.82	354.82	0	ANNUAL	WMRS	5
MINE	424480	5408323	0.36197	350.68	350.68	0	ANNUAL	WMRS	5
TMA	422928	5408393	0.35641	355	355	0	ANNUAL	WMRS	5
MINE	424284	5408273	0.35328	352.46	352.46	0	ANNUAL	WMRS	5
MINE	424188	5408273	0.35223	352	352	0	ANNUAL	WMRS	5
MINE	424380	5408273	0.35189	352.4	352.4	0	ANNUAL	WMRS	5
MINE	424092	5408273	0.35085	353	353	0	ANNUAL	WMRS	5
MINE	424430	5408273	0.3499	352	352	0	ANNUAL	WMRS	5
MINE	423995	5408273	0.34868	354.72	354.72	0	ANNUAL	WMRS	5
MINE	424480	5408273	0.34696	351.34	351.34	0	ANNUAL	WMRS	5
MINE	423899	5408273	0.34499	357.85	357.85	0	ANNUAL	WMRS	5
TMA	422328	5408593	0.34285	352	352	0	ANNUAL	WMRS	5
MINE	422730	5408423	0.34248	354	354	0	ANNUAL	WMRS	5
MINE	423803	5408273	0.33696	360	360	0	ANNUAL	WMRS	5
MINE	423611	5408273	0.33543	355.94	355.94	0	ANNUAL	WMRS	5
MINE	423707	5408273	0.3348	358.98	358.98	0	ANNUAL	WMRS	5
TMA	422728	5408393	0.33327	355	355	0	ANNUAL	WMRS	5
MINE	423226	5408273	0.33274	354	354	0	ANNUAL	WMRS	5
MINE	423515	5408273	0.33266	353.29	353.29	0	ANNUAL	WMRS	5
MINE	423418	5408273	0.33138	352	352	0	ANNUAL	WMRS	5
MINE	423130	5408273	0.33126	355.12	355.12	0	ANNUAL	WMRS	5
MINE	423322	5408273	0.33046	351	351	0	ANNUAL	WMRS	5
TMA	424328	5408193	0.32779	353.95	353.95	0	ANNUAL	WMRS	5
TMA	424128	5408193	0.32495	354	354	0	ANNUAL	WMRS	5
MINE	424314	5408177	0.32285	354	354	0	ANNUAL	WMRS	5
MINE	424413	5408177	0.32229	354	354	0	ANNUAL	WMRS	5
MINE	424216	5408177	0.32177	354	354	0	ANNUAL	WMRS	5
MINE	422530	5408423	0.32046	354.8	354.8	0	ANNUAL	WMRS	5

Discrete F	X	Y	Concentr	Elevation	Hill Heigh	Flagpole (	Averagin	Source Gr	Rank	Net ID
TMA	423128	5408593	1.92194	352.5	352.5	0	MONTH	WMRS	1ST	
MINE	423130	5408569	1.87786	353	353	0	MONTH	WMRS	1ST	
MINE	423226	5408569	1.82915	351.25	351.25	0	MONTH	WMRS	1ST	
TMA	422928	5408593	1.77212	353	353	0	MONTH	WMRS	1ST	
TMA	423328	5408593	1.75843	349.35	349.35	0	MONTH	WMRS	1ST	
MINE	423322	5408569	1.72561	350.13	350.13	0	MONTH	WMRS	1ST	
MINE	423130	5408471	1.69913	353.62	353.62	0	MONTH	WMRS	1ST	
MINE	423226	5408471	1.64819	352	352	0	MONTH	WMRS	1ST	
MINE	423418	5408569	1.58897	350	350	0	MONTH	WMRS	1ST	
TMA	423128	5408393	1.57508	354.07	354.07	0	MONTH	WMRS	1ST	
MINE	423322	5408471	1.55268	351	351	0	MONTH	WMRS	1ST	
MINE	423130	5408372	1.54577	354.82	354.82	0	MONTH	WMRS	1ST	
MINE	422930	5408423	1.54018	354.99	354.99	0	MONTH	WMRS	1ST	
TMA	422928	5408393	1.50027	355	355	0	MONTH	WMRS	1ST	
MINE	423226	5408372	1.4927	353	353	0	MONTH	WMRS	1ST	
TMA	422728	5408593	1.48369	353	353	0	MONTH	WMRS	1ST	
MINE	423418	5408471	1.42651	350.37	350.37	0	MONTH	WMRS	1ST	
MINE	423515	5408569	1.42498	350	350	0	MONTH	WMRS	1ST	
TMA	423328	5408393	1.42334	351	351	0	MONTH	WMRS	1ST	
MINE	423130	5408273	1.40767	355.12	355.12	0	MONTH	WMRS	1ST	
MINE	423322	5408372	1.39764	351	351	0	MONTH	WMRS	1ST	
MINE	424284	5408569	1.36066	347.79	347.79	0	MONTH	WMRS	1ST	
MINE	423226	5408273	1.35801	354	354	0	MONTH	WMRS	1ST	
MINE	424188	5408569	1.3541	347.04	347.04	0	MONTH	WMRS	1ST	
MINE	424380	5408573	1.34716	348	348	0	MONTH	WMRS	1ST	
MINE	424092	5408569	1.33893	347.79	347.79	0	MONTH	WMRS	1ST	
MINE	424430	5408573	1.32757	348	348	0	MONTH	WMRS	1ST	
MINE	422730	5408423	1.32001	354	354	0	MONTH	WMRS	1ST	
MINE	422930	5408223	1.31469	356.42	356.42	0	MONTH	WMRS	1ST	
TMA	423128	5408193	1.31089	356	356	0	MONTH	WMRS	1ST	
MINE	424480	5408573	1.30166	348	348	0	MONTH	WMRS	1ST	
MINE	423995	5408569	1.29723	347.85	347.85	0	MONTH	WMRS	1ST	
	424499	5408579	1.29605	348	348	0	MONTH	WMRS	1ST	
TMA	422728	5408393	1.29421	355	355	0	MONTH	WMRS	1ST	
MINE	423130	5408177	1.29146	356	356	0	MONTH	WMRS	1ST	
MINE	423418	5408372	1.28936	351	351	0	MONTH	WMRS	1ST	
MINE	424380	5408523	1.28908	348.61	348.61	0	MONTH	WMRS	1ST	
MINE	423515	5408471	1.28819	351	351	0	MONTH	WMRS	1ST	
TMA	422928	5408193	1.28477	357	357	0	MONTH	WMRS	1ST	
MINE	424430	5408523	1.2754	348.58	348.58	0	MONTH	WMRS	1ST	
MINE	423322	5408273	1.26585	351	351	0	MONTH	WMRS	1ST	
MINE	424480	5408523	1.25609	348.55	348.55	0	MONTH	WMRS	1ST	
MINE	423611	5408569	1.25484	350	350	0	MONTH	WMRS	1ST	
MINE	423899	5408569	1.24651	348.73	348.73	0	MONTH	WMRS	1ST	
MINE	423229	5408177	1.23902	354.3	354.3	0	MONTH	WMRS	1ST	
MINE	424284	5408471	1.23017	349	349	0	MONTH	WMRS	1ST	
MINE	424380	5408473	1.23002	349	349	0	MONTH	WMRS	1ST	
MINE	424430	5408473	1.22169	349	349	0	MONTH	WMRS	1ST	

MINE	424188	5408471	1.21803	349	349	0	MONTH	WMRS	1ST
MINE	424480	5408473	1.20841	349	349	0	MONTH	WMRS	1ST
TMA	422528	5408593	1.20364	354	354	0	MONTH	WMRS	1ST
MINE	424092	5408471	1.19725	350	350	0	MONTH	WMRS	1ST
MINE	423130	5408081	1.1881	357	357	0	MONTH	WMRS	1ST
MINE	423803	5408569	1.18785	349.96	349.96	0	MONTH	WMRS	1ST
TMA	423528	5408393	1.17654	352	352	0	MONTH	WMRS	1ST
MINE	424380	5408423	1.1756	350	350	0	MONTH	WMRS	1ST
MINE	423418	5408273	1.1738	352	352	0	MONTH	WMRS	1ST
TMA	423328	5408193	1.17247	352	352	0	MONTH	WMRS	1ST
MINE	424430	5408423	1.17141	350	350	0	MONTH	WMRS	1ST
MINE	423515	5408372	1.16978	352	352	0	MONTH	WMRS	1ST
MINE	424480	5408423	1.16227	349.87	349.87	0	MONTH	WMRS	1ST
MINE	423995	5408471	1.15958	350.49	350.49	0	MONTH	WMRS	1ST
MINE	422730	5408223	1.15702	356	356	0	MONTH	WMRS	1ST
MINE	423327	5408177	1.15554	352	352	0	MONTH	WMRS	1ST
MINE	423611	5408471	1.14139	351.33	351.33	0	MONTH	WMRS	1ST
TMA	424328	5408393	1.14009	350.25	350.25	0	MONTH	WMRS	1ST
MINE	423229	5408081	1.13717	355	355	0	MONTH	WMRS	1ST
TMA	422728	5408193	1.13285	356	356	0	MONTH	WMRS	1ST
MINE	422930	5408023	1.13251	358	358	0	MONTH	WMRS	1ST
MINE	424380	5408373	1.12207	351	351	0	MONTH	WMRS	1ST
MINE	424430	5408373	1.11666	350.05	350.05	0	MONTH	WMRS	1ST
MINE	424284	5408372	1.11309	351	351	0	MONTH	WMRS	1ST
MINE	423899	5408471	1.11259	351.16	351.16	0	MONTH	WMRS	1ST
MINE	423707	5408569	1.11206	350.01	350.01	0	MONTH	WMRS	1ST
MINE	424480	5408373	1.11202	350	350	0	MONTH	WMRS	1ST
MINE	422530	5408423	1.10398	354.8	354.8	0	MONTH	WMRS	1ST
TMA	424128	5408393	1.10277	350.25	350.25	0	MONTH	WMRS	1ST
MINE	423130	5407985	1.09589	357.83	357.83	0	MONTH	WMRS	1ST
MINE	424188	5408372	1.09149	350.26	350.26	0	MONTH	WMRS	1ST
TMA	422528	5408393	1.08328	354.79	354.79	0	MONTH	WMRS	1ST
MINE	423515	5408273	1.06864	353.29	353.29	0	MONTH	WMRS	1ST
MINE	423426	5408177	1.06796	353	353	0	MONTH	WMRS	1ST
MINE	424430	5408323	1.0675	351	351	0	MONTH	WMRS	1ST
MINE	424092	5408372	1.06743	351.02	351.02	0	MONTH	WMRS	1ST
MINE	424380	5408323	1.06675	351.24	351.24	0	MONTH	WMRS	1ST
MINE	424480	5408323	1.06492	350.68	350.68	0	MONTH	WMRS	1ST
MINE	423327	5408081	1.06022	352.5	352.5	0	MONTH	WMRS	1ST
MINE	423803	5408471	1.05898	352.21	352.21	0	MONTH	WMRS	1ST
MINE	423229	5407985	1.0476	355.59	355.59	0	MONTH	WMRS	1ST
MINE	423611	5408372	1.04718	353.6	353.6	0	MONTH	WMRS	1ST
MINE	423995	5408372	1.03799	352.59	352.59	0	MONTH	WMRS	1ST
TMA	423928	5408393	1.0374	353.49	353.49	0	MONTH	WMRS	1ST
MINE	422730	5408023	1.02194	357	357	0	MONTH	WMRS	1ST
MINE	424430	5408273	1.01957	352	352	0	MONTH	WMRS	1ST
MINE	424480	5408273	1.01844	351.34	351.34	0	MONTH	WMRS	1ST
MINE	424380	5408273	1.01735	352.4	352.4	0	MONTH	WMRS	1ST
MINE	423707	5408471	1.01715	352.27	352.27	0	MONTH	WMRS	1ST

*** THE MAXIMUM 100 1-HR AVERAGE CONCENTRATION VALUES FOR SOURCE GROUP: WPS ***

RANK BY	YEAR	RANK	CONC	YYYYMM	XR	YR	TYPE	Ontario Reg. 419/05
1	1996	2	97.1899	2E+09	428808	5412548	DC	Discarded
1	1997	4	93.7445	2E+09	429130	5412623	DC	Discarded
1	1998	19	77.9769	2E+09	429128	5412693	DC	Discarded
1	1999	27	76.2725	2E+09	428808	5412548	DC	Discarded
1	2000	1	102.218	2E+09	428808	5412548	DC	Discarded
2	1996	9	87.529	2E+09	428930	5412623	DC	Discarded
2	1997	7	89.442	2E+09	428930	5413023	DC	Discarded
2	1998	35	74.2518	2E+09	428808	5412548	DC	Discarded
2	1999	30	75.6869	2E+09	428930	5413023	DC	Discarded
2	2000	3	97.1136	2E+09	428930	5412823	DC	Discarded
3	1996	11	85.465	2E+09	429130	5412823	DC	Discarded
3	1997	12	82.6111	2E+09	428809	5413327	DC	Discarded
3	1998	46	71.7388	2E+09	429530	5412623	DC	Discarded
3	1999	39	73.5279	2E+09	428808	5412548	DC	Discarded
3	2000	5	91.6569	2E+09	428930	5412623	DC	Discarded
4	1996	15	81.693	2E+09	429128	5412693	DC	Discarded
4	1997	13	82.5486	2E+09	429330	5412623	DC	Discarded
4	1998	56	70.6307	2E+09	425130	5414223	DC	Discarded
4	1999	44	72.0016	2E+09	428930	5412623	DC	Discarded
4	2000	6	90.031	2E+09	429130	5412823	DC	Discarded
5	1996	22	77.283	2E+09	428930	5413023	DC	Discarded
5	1997	17	80.2779	2E+09	429130	5412823	DC	Discarded
5	1998	59	70.3878	2E+09	429330	5412823	DC	Discarded
5	1999	53	70.8094	2E+09	428930	5412823	DC	Discarded
5	2000	8	88.5286	2E+09	428930	5413023	DC	Discarded
6	1996	28	76.1077	2E+09	428930	5413023	DC	Discarded
6	1997	20	77.8349	2E+09	429128	5413193	DC	Discarded
6	1998	60	70.3594	2E+09	428808	5412548	DC	Discarded
6	1999	58	70.5513	2E+09	428808	5412548	DC	Discarded
6	2000	10	86.0819	2E+09	428930	5412823	DC	Discarded
7	1996	37	73.7064	2E+09	429330	5412823	DC	Discarded
7	1997	25	76.8425	2E+09	429330	5413023	DC	Discarded
7	1998	64	69.9797	2E+09	428808	5412548	DC	Discarded
7	1999	65	69.8912	2E+09	428930	5412823	DC	Discarded
7	2000	14	82.107	2E+09	429130	5413023	DC	Discarded
8	1996	40	72.7725	2E+09	427730	5414223	DC	Discarded
8	1997	29	75.964	2E+09	428808	5412548	DC	Discarded
8	1998	69	69.4812	2E+09	429128	5412693	DC	Discarded
8	1999	66	69.8533	2E+09	429128	5412693	DC	Discarded
8	2000	16	80.2951	2E+09	429130	5412823	DC	Discarded
9	1996	47	71.4204	2E+09	428808	5412548	DC	Discarded
9	1997	31	75.2296	2E+09	429130	5413223	DC	Discarded
9	1998	78	68.4278	2E+09	428930	5412623	DC	Discarded
9	1999	68	69.5598	2E+09	427628	5414193	DC	Discarded
9	2000	18	78.0916	2E+09	428930	5413023	DC	Discarded
10	1996	61	70.359	2E+09	428809	5413327	DC	Discarded

10	1997	41	72.6941	2E+09	427930	5414223	DC	Discarded
10	1998	79	68.3454	2E+09	429130	5412623	DC	Discarded
10	1999	71	69.4135	2E+09	429128	5412693	DC	
10	2000	21	77.6605	2E+09	428808	5412548	DC	Discarded
11	1996	63	70.074	2E+09	425130	5414223	DC	Discarded
11	1997	42	72.1129	2E+09	429530	5412823	DC	Discarded
11	1998	88	67.8372	2E+09	429530	5412823	DC	Discarded
11	1999	72	69.3416	2E+09	428930	5412623	DC	
11	2000	23	76.99	2E+09	429128	5413193	DC	Discarded
12	1996	77	68.6443	2E+09	428330	5414223	DC	Discarded
12	1997	43	72.1092	2E+09	429530	5412623	DC	Discarded
12	1998	89	67.7606	2E+09	428128	5414193	DC	Discarded
12	1999	76	68.9297	2E+09	428628	5414193	DC	
12	2000	24	76.852	2E+09	429330	5413023	DC	Discarded
13	1996	81	68.2845	2E+09	428930	5412823	DC	
13	1997	45	71.7417	2E+09	428930	5412623	DC	Discarded
13	1998	92	67.2595	2E+09	429128	5412693	DC	
13	1999	97	66.63	2E+09	429130	5412623	DC	
13	2000	26	76.8255	2E+09	428809	5413327	DC	Discarded
14	1996	83	68.204	2E+09	428930	5412623	DC	
14	1997	48	71.1242	2E+09	428930	5413023	DC	
14	1998	94	66.744	2E+09	428930	5412623	DC	
14	2000	32	74.7226	2E+09	428808	5412548	DC	Highest
15	1996	85	68.1779	2E+09	428628	5414193	DC	
15	1997	49	71.0305	2E+09	427628	5414193	DC	
15	2000	33	74.4772	2E+09	428930	5412623	DC	
16	1996	87	67.9299	2E+09	428930	5413023	DC	
16	1997	51	70.9447	2E+09	429130	5413223	DC	
16	2000	34	74.4122	2E+09	429130	5413223	DC	
17	1996	96	66.6438	2E+09	429128	5413193	DC	
17	1997	52	70.828	2E+09	428930	5413223	DC	
17	2000	36	73.9914	2E+09	428808	5412548	DC	
18	1996	98	66.6194	2E+09	429130	5412623	DC	
18	1997	55	70.693	2E+09	428809	5413327	DC	
18	2000	38	73.6535	2E+09	427930	5414223	DC	
19	1997	62	70.1607	2E+09	428930	5412823	DC	
19	2000	50	71.0265	2E+09	429330	5413023	DC	
20	1997	70	69.4359	2E+09	428930	5413223	DC	
20	2000	54	70.7884	2E+09	429530	5413223	DC	
21	1997	75	69.1724	2E+09	429330	5412623	DC	
21	2000	57	70.6276	2E+09	428930	5412623	DC	
22	1997	82	68.2231	2E+09	427930	5414223	DC	
22	2000	67	69.7535	2E+09	429128	5412693	DC	
23	1997	93	67.0275	2E+09	429730	5412823	DC	
23	2000	73	69.235	2E+09	429128	5412693	DC	
24	1997	95	66.6621	2E+09	429730	5412823	DC	
24	2000	74	69.235	2E+09	429128	5412693	DC	
25	1997	99	66.4799	2E+09	429128	5412693	DC	
25	2000	80	68.2998	2E+09	428330	5414223	DC	

*** THE MAXIMUM 100 24-HR AVERAGE CONCENTRATION VALUES FOR SOURCE GROUP: WPS ***

RANK BY	YEAR	RANK	CONC	YYYYMM	XR	YR	TYPE	Ontario Reg. 419/05
1	1996	6	6.06937	2E+09	428809	5413327	DC	Discarded
1	1997	4	6.2837	2E+09	427530	5414423	DC	Discarded
1	1998	7	5.98287	2E+09	429128	5412693	DC	Discarded
1	1999	1	8.03087	2E+09	428808	5412548	DC	Discarded
1	2000	16	5.47796	2E+09	428130	5414423	DC	Discarded
2	1996	9	5.85239	2E+09	427730	5414223	DC	Highest
2	1997	5	6.15698	2E+09	427530	5414223	DC	Discarded
2	1998	13	5.60675	2E+09	428930	5413223	DC	
2	1999	2	7.33165	2E+09	428930	5412623	DC	Discarded
2	2000	18	5.41036	2E+09	426128	5414593	DC	
3	1996	10	5.83581	2E+09	428817	5414150	DC	
3	1997	14	5.54485	2E+09	427628	5414693	DC	Discarded
3	1998	19	5.39254	2E+09	429330	5412823	DC	
3	1999	3	6.63152	2E+09	429128	5412693	DC	Discarded
3	2000	22	5.33682	2E+09	426130	5414423	DC	
4	1996	12	5.62642	2E+09	428730	5414223	DC	
4	1997	15	5.52705	2E+09	427530	5414623	DC	Discarded
4	1998	21	5.35555	2E+09	428808	5412548	DC	
4	1999	8	5.89611	2E+09	429330	5412823	DC	Discarded
4	2000	23	5.32977	2E+09	426130	5414623	DC	
5	1996	17	5.43626	2E+09	428628	5414193	DC	
5	1997	27	5.22909	2E+09	429130	5408823	DC	
5	1998	30	5.13855	2E+09	428930	5412623	DC	
5	1999	11	5.66207	2E+09	429130	5412623	DC	Discarded
5	2000	24	5.31376	2E+09	426128	5414393	DC	
6	1996	25	5.2802	2E+09	427628	5414193	DC	
6	1997	36	5.00007	2E+09	428930	5413023	DC	
6	1998	35	5.044	2E+09	429130	5412623	DC	
6	1999	20	5.38292	2E+09	428809	5413327	DC	
6	2000	29	5.20907	2E+09	428930	5412823	DC	
7	1996	26	5.27014	2E+09	427730	5414423	DC	
7	1997	38	4.96929	2E+09	427330	5414223	DC	
7	1998	51	4.70025	2E+09	425728	5414193	DC	
7	1999	28	5.22329	2E+09	428930	5413223	DC	
7	2000	34	5.0625	2E+09	428808	5412548	DC	
8	1996	41	4.87599	2E+09	428730	5414423	DC	
8	1997	39	4.96493	2E+09	429102	5408830	DC	
8	1998	54	4.65235	2E+09	425730	5414223	DC	
8	1999	31	5.11465	2E+09	429102	5408830	DC	
8	2000	37	4.9848	2E+09	426130	5414223	DC	
9	1996	42	4.867	2E+09	427930	5414223	DC	
9	1997	47	4.76751	2E+09	427330	5414423	DC	
9	1998	56	4.58698	2E+09	426328	5414193	DC	
9	1999	32	5.09137	2E+09	429130	5408823	DC	
9	2000	45	4.82312	2E+09	426128	5414193	DC	
10	1996	58	4.5503	2E+09	429128	5412693	DC	

10	1997	63	4.44485	2E+09	427730	5415023	DC
10	1998	61	4.47158	2E+09	426330	5414223	DC
10	1999	33	5.06715	2E+09	429130	5412823	DC
10	2000	46	4.79877	2E+09	426128	5414793	DC
11	1996	64	4.44162	2E+09	428808	5412548	DC
11	1997	71	4.35451	2E+09	429128	5413193	DC
11	1998	67	4.39596	2E+09	427930	5414223	DC
11	1999	40	4.89802	2E+09	429530	5413023	DC
11	2000	50	4.70362	2E+09	427930	5414223	DC
12	1996	82	4.20146	2E+09	428930	5412623	DC
12	1997	74	4.31622	2E+09	429330	5408623	DC
12	1998	76	4.24076	2E+09	428730	5414223	DC
12	1999	43	4.85274	2E+09	428330	5414423	DC
12	2000	53	4.6576	2E+09	428930	5412623	DC
13	1996	90	4.11933	2E+09	429128	5412693	DC
13	1997	80	4.2095	2E+09	429130	5413223	DC
13	1998	81	4.20922	2E+09	425530	5414223	DC
13	1999	44	4.82703	2E+09	427628	5414193	DC
13	2000	55	4.64987	2E+09	427730	5414223	DC
14	1996	92	4.10517	2E+09	429330	5412823	DC
14	1997	84	4.18538	2E+09	427530	5414823	DC
14	1998	97	4.07742	2E+09	428817	5414150	DC
14	1999	48	4.71606	2E+09	429730	5413023	DC
14	2000	57	4.56761	2E+09	426130	5414823	DC
15	1996	93	4.09892	2E+09	428808	5412548	DC
15	1997	86	4.17747	2E+09	427330	5414623	DC
15	1999	49	4.71498	2E+09	428730	5414223	DC
15	2000	59	4.4808	2E+09	428808	5412548	DC
16	1996	99	4.03818	2E+09	425530	5414223	DC
16	1997	89	4.13027	2E+09	425730	5414223	DC
16	1999	52	4.68099	2E+09	428809	5413327	DC
16	2000	60	4.47284	2E+09	428809	5413327	DC
17	1997	91	4.1104	2E+09	428809	5413327	DC
17	1999	65	4.42693	2E+09	429930	5413223	DC
17	2000	62	4.46777	2E+09	428808	5412548	DC
18	1997	94	4.08784	2E+09	425728	5414193	DC
18	1999	72	4.34707	2E+09	428930	5412823	DC
18	2000	66	4.39785	2E+09	428808	5412548	DC
19	1999	73	4.34397	2E+09	429330	5408623	DC
19	2000	68	4.38309	2E+09	429128	5412693	DC
20	1999	77	4.22913	2E+09	428330	5414223	DC
20	2000	69	4.37435	2E+09	429130	5413023	DC
21	1999	79	4.21301	2E+09	428628	5414193	DC
21	2000	70	4.37326	2E+09	429128	5412693	DC
22	1999	87	4.1558	2E+09	428808	5412548	DC
22	2000	75	4.3074	2E+09	429130	5412623	DC
23	1999	95	4.08006	2E+09	428530	5414823	DC
23	2000	78	4.21699	2E+09	428930	5412823	DC
24	1999	98	4.06553	2E+09	428930	5413023	DC

APPENDIX E. SUPPORTING CALCULATIONS

Emission Summary and Dispersion Modelling Report
New Gold - Rainy River Mine
Aggregate Material Handling & Processing

Process Description

Activities at the quarries include excavation, crushing (one crushing and screening plant may be located at any of the operating pits at any given time), and material handling. Particulate emissions are calculated from fine aggregate which has been crushed and screened or sand and gravel operations where the raw material already contains fines. Ore and mine rock are mined below the water table and as such are wet as mined.

Emission Methodology - Emission Factor

U.S. EPA AP 42 - Ch. 11.19.2 Crushed Stone Processing and Ch. 11.24 (based on high moisture > 4%)
Aggregate handling is limited to 10 hours per day.

Controlled sources (with wet suppression) are those that are part of the processing plant that employs current wet suppression technology similar to the study group.

Emission Estimation

Process	Source ID	Contaminant	CAS RN	Material Handling/Processing Rate (Mg/hr)	Controlled Emission Factor (kg/Mg)	24-Hour Emission Rate (g/s)
Drop to Primary Crusher	E_OUTCRUSH	Suspended particulate matter	N/A-TSP	541	7.00E-05	1.05E-02
Primary Crushing	E_OUTCRUSH	Suspended particulate matter	N/A-TSP	541	6.00E-04	9.02E-02
Conveyor Drop to Secondary Crusher	E_OUTCRUSH	Suspended particulate matter	N/A-TSP	541	7.00E-05	1.05E-02
Secondary Crushing	E_OUTCRUSH	Suspended particulate matter	N/A-TSP	541	6.00E-04	9.02E-02
Conveyor Drop to Screener	E_OUTCRUSH	Suspended particulate matter	N/A-TSP	541	7.00E-05	1.05E-02
Drop to Mobile Crusher	MOBI_CRUSH	Suspended particulate matter	N/A-TSP	400	7.00E-05	7.78E-03
Mobile Crushing	MOBI_CRUSH	Suspended particulate matter	N/A-TSP	400	6.00E-04	6.67E-02
Conveyor Drop to Stockpile	MOBI_CRUSH	Suspended particulate matter	N/A-TSP	400	7.00E-05	7.78E-03
Screening	E_OUTSCREEN	Suspended particulate matter	N/A-TSP	541	1.10E-03	1.65E-01
Conveyor Drop from Screener to Stockpile	E_OUTSCREEN	Suspended particulate matter	N/A-TSP	541	7.00E-05	1.05E-02
Conveyor Drop from Screener to Stockpile	E_OUTSCREEN	Calcium chloride	10043-52-4	8	7.00E-05	1.56E-04
Haul Truck Loading	E_OUTSCREEN	Suspended particulate matter	N/A-TSP	541	5.00E-05	7.51E-03

Notes:
1 Crushing capacity rate
2 Emission rate for each equipment in each pit, calculated based on 10-hour operating per day.

Sample Calculation

Primary crusher

Particulate Matter (g/s) = emssion factor for conveyor transfer point (kg/Mg) x handling rate (Mg/hr) x 1,000 g/kg x 1 hr/3,600 sec eq. 10
Particulate Matter (g/s) = 7e-5 kg/Mg x 541 Mg/hr x 1,000 g/kg x 1 hr/3,600 sec

Particulate Matter (g/s) = 0.01

Data Quality

Emission rate estimates that are developed from tests on only a small number of facilities where there is evidence of variability within the source category population (e.g.,

Emission Summary and Dispersion Modelling Report
New Gold - Rainy River Mine
Ammonia Emissions

INCO Reactor Tank

Process Description

The INCO reactor tank is used to destroy residual amounts of cyanide present in solution following leaching and CIP. Trace ammonia emissions from this source are expected, since the INCO cyanide detoxification is effective at removing cyanide from the process effluent; the ammonia present in the effluent is not involved in the reaction, and remains in solution and prone to entrainment in the air exhaust since the INCO reactor is an aerated vessel (0.76 m^3/s air). The air flowrate has been estimated based on scaling a previous study for 6000 tpd to 24000 tpd mill.

Emission Methodology - Engineering Calculation

Air emissions were estimated based upon an estimated ammonia concentration of 1 ppm in the exhaust.

Data Quality

The data quality is considered to be marginal. The concentrations of ammonia in the exhaust are based upon the potential concentrations of this parameter in solution and the

Sample Calculation

Concentration (mg/m^3) = Concentration (ppm) x Molecular Weight (g/mol) / Molar Volume eq. 19
Concentration (mg/m^3) = (1 ppm) x (17.031 g/mol) / (24.45 L)
Concentration (mg/m^3) = 0.697

Emission Rate (g/s) = Concentration (mg/m^3) x Flow Rate (m^3/s) x 1 g/1000mg eq. 20
Emission Rate (g/s) = (0.697 mg/m^3) x (0.76 m^3/s) x 1 g/1000 mg
Emission Rate (g/s) = 0.00053

Emission Estimation

Process	Source ID	Contaminant	CAS RN	Concentration (ppm)	Molecular Weight	Concentration (mg/m^3)	Flow Rate (m^3/s)	Emission Rate (g/s)
INCO	AMM	Ammonia	7664-41-7	1	17.031	0.697	0.76	5.29E-04

Emission Summary and Dispersion Modelling Report
New Gold - Rainy River Mine
Ammonia Emissions

Electrowinning (CN Destruction)

Process Description
The electrowinning cells produce a gold and silver sludge from pregnant solutions (CIP circuit and gravity concentration). Barren solution is stored in tank (exhausted through Source ID

Emission Methodology - Engineering Calculation
Engineering calculation based on process design and reaction chemistry. The emission rates were calculated based on basic reaction chemistry. Physical data was estimated from

Data Quality
The data quality is considered to be marginal.

Sample Calculation

NaCN weight in solution volume (g) = Volume of total solution (L) x NaCN concentration in cells (mg/L) x (1g/1000mg) eq. 21
NaCN weight in solution volume (g) = (625,000 L) x (10 mg/L) x (1 g / 1000 mg)
NaCN weight in solution volume (g) = 6,250

Mass of CN ion in Solution (g) = Molar mass of CN (g/mol) x Mass of CN (g) / Molar Mass of NaCN (g/mol) eq. 22
Mass of CN ion in Solution (g) = (26 g/mol CN) x (6250 g) x (49 g/mol NaCN)
Mass of CN ion in Solution (g) = 3,316

Molar ratio of NH_3 produced per g of CN = Molar Mass of Ammonia (g/mol) / Molar Mass of CN (g/mol) eq. 23
Molar ratio of NH_3 produced per g of CN = (17.031 g/mol) / (26.02 g/mol)
Molar ratio of NH_3 produced per g of CN = 0.65

Ammonia Produced (g)= Total mass of CN ion (g) x Ammonia Produced Per CN ion eq. 24
Ammonia Produced (g)= (3316.33 g) x (0.6545)
Ammonia Produced (g)= 2,171

Ammonia Emission Rate (g/s) = Mass of Ammonia Produced over Retention Time (g) x Conversion Factor (hours to seconds) eq. 25
Ammonia Emission Rate (g/s) = (2170.54 g) / (8 hour) x (1 hour / 3600 seconds)
Ammonia Emission Rate (g/s) = 0.075

Emission Estimation

Parameters of Electrowinnig Circuit

Number of Cells	5	
Volume per Cell	125,000	L
Total Volume	625,000	L
Retention Time in Tank	8	hours

Process	Source ID	Contaminant	CAS RN	Cyanide (NaCN) Solution Concentration (mg/L)	NaCN Weight in Solution (g)	Weight of CN Ion (g)	Mass of NH3 produced per mass of CN Ion (g)	Ammonia Produced (g)	Emission Rate (g/s)
Electrowinning	EF5	Ammonia	7664-41-7	10	6,250	3,316	0.65	2,171	0.075

Emission Summary and Dispersion Modelling Report
New Gold - Rainy River Mine
Caustic Loading

Process Description
Bulk sodium hydroxide is delivered to the site in tanker trucks where the sodium hydroxide is unloaded into the storage tank. Unloading of sodium hydroxide into the storage tanks is expected to generate emissions. Loaded carbon is washed with a dilute HCl acid solution to remove inorganics prior to the caustic wash. Caustic is added to spent HCl acid in the acid wash tank which is equipped with an exhaust (Source ID EF4). The site has a caustic storage tank which receives solution by tanker truck (Source ID EF8). Carbon stripping involves washing loaded carbon with a higher strength, pressurized hot caustic cyanide solution, to produce a high strength pregnant (gold bearing) solution. The process is at ambient temperature and is located approximately 2.7 km from the property line. Fugitive emissions are expected from the process of loading hydrochloric acid tanks due to air displacement of potentially acid containing vapours.

Emission Methodology - Emission Factor & Engineering Estimation
Emission factor obtained from Table 1 FACTORS FOR TOXIC AIR CONTAMINANTS OF CONCERN TO THE METAL FINISHING INDUSTRY, developed by the Metal Finishing Association of Southern California and the South Coast Air

Tank Dimensions
Diameter (m) 18
Height (m) 21

The HCl calculations were based on Equation 4 from Australia's Emission Estimation Technique Manual for Alumina Refining. This calculation is given a data quality of average. Emissions were based on a fill rate of 28 t over a period of

Emission Rate, E = 0.042 x MW x V x (Vol%/100) eq. 28

Where:
E = Mass of acid emitted during filling (kg)
MW = Molecular weight of acid (g/mol)
V = Volume of vapour space or volume of acid added (m3)
Vol% = Partial vapour pressure (kPa) divided by ambient pressure of 101.3 kPa

Data Quality
Emission rate estimates that are developed from tests on a reasonable number of facilities where the source category population is sufficiently specific to minimize variability (e.g., US EPA, AP-42, emission factor quality rating of C) are anticipated to provide average quality emission rate estimates.

Sample Calculation
Tank Surface Area (m^2) = $2\Pi r^2 + 2\Pi rh$ = $2\Pi \times (18/2\ m)^2 + 2\Pi \times (18/2)\ m \times 21\ m$ eq. 29
Tank Surface Area (m^2) = 1,696

NaOH emission rate (g/s) = emission factor (lb/hr-m^2) x tank surface area (m^2) x 454 g/lb x 1 hr/3,600 sec eq. 30
NaOH emission rate (g/s) = 5.02×10^{-8} lb/hr-m^2 x 1,696 m^2 x 454 g/lb x 1 hr/3,600 sec
NaOH emission rate (g/s) = 1.07E-05

HCl Emission Rate (g/s) = 0.042 x 36.46 g/mol x 0.002235 m3/s x 3.13 kPa ÷ 101.3 kPa ÷ 100 x 1000 g/kg x 1.5 hr ÷ 24 hr eq. 31
HCl Emission Rate (g/s) = 6.61E-05

Emission Estimation

Source ID	Source Description	Contaminant	CAS RN	Emission Factor (lb/hr-ft^2)	Tank Area (m^2)	Molecular Weight	Acid Addition Rate (m^3/s)	Partial Vapour Pressure (kPa)	Emission Rate (g/s)
EF4	HCl Storage Tanks	Hydrochloric Acid	7647-01-0	N/A	N/A	36.46	2.24E-03	3.13	6.61E-05
EF8	Caustic Storage Tanks	Sodium Hydroxide	1310-73-2	5.40E-07	1,696	--	--	--	1.07E-05

Emission Summary and Dispersion Modelling Report
New Gold - Rainy River Mine
Combustion Emissions from Engines, Generators Sets and Fire Pump

Process Description

During periods of power outages, two (2), Tier 4, 2.5 Megawatt (MW) diesel-powered generators provides emergency power. All limited to 500 hr/yr and

Emission Methodology - Emission Factor

Certified engine emissions standards for Tier II and III engines.

Emission Estimation

Activity/Location	Source ID	Power Rating (kW)	Contaminant	CAS RN	Emission Factor	Units	1-Hour Emission Rate (g/s)	24-Hour Emission Rate (g/s)
Aggregate Pit Crushing	E_OUTCRUSH	552	Nitrogen oxides	10102-44-0	4.80	g/kW-hr	7.36E-01	7.36E-01
Aggregate Pit Screening	E_OUTSCREEN	83	Nitrogen oxides	10102-44-0	3.00	g/kW-hr	6.92E-02	6.92E-02
Emergency Generator	EGEN1	2,500	Nitrogen oxides	10102-44-0	0.40	g/kW-hr	2.78E-01	7.93E-03
Emergency Generator	EGEN2	2,500	Nitrogen oxides	10102-44-0	0.40	g/kW-hr	2.78E-01	7.93E-03
Fire Pump	FP1	N/A	Nitrogen oxides	10102-44-0	3.17	lb/hr	3.99E-01	9.99E-02
Fire Pump	FP2	N/A	Nitrogen oxides	10102-44-0	3.17	lb/hr	3.99E-01	9.99E-02
Mobile Crusher	MOBI_CRUSH	328	Nitrogen oxides	10102-44-0	4.80	g/kW-hr	4.37E-01	4.37E-01
Watering Pumps (19 @ 75 kW ea.)	WPs	1,425	Nitrogen oxides	10102-44-0	5.10	g/kW-hr	1.01E+00	5.05E-01
Mill Portable Compressor (825 cfm)	COMPRESSOR	192	Nitrogen oxides	10102-44-0	3.17	g/kW-hr	1.69E-01	7.04E-03

Sample Calculations

E_OUTCRUSH NOx ER: 1-hr Emission Rate (g/s) = Emission Limit x Power Output eq. 1
= 4.80 g/kW-hr x 552 kW ÷ 3600 s/hr
= 7.36E-01 g/s

Generators NOx ER: 24-hr Emission Rate (g/s) = 1 hour emission rate x 12hr/24hr eq. 2
= 7.36E-01 g/s

Data Quality

Combustion emissions from the crushers and screeners are based on emission factors where the emission rate estimates are developed from tests on a

Emission Summary and Dispersion Modelling Report
New Gold - Rainy River Mine
Drilling and Blasting

Process Description

Ore is extracted from the open pit and underground mine by drilling and blasting. Drilling occurs at 111 holes per 12 hr shift. Blasting uses a maximum emulsion of 95 tonnes and a maximum blast area of based on 111 holes, 5 m x 5 m with 171 mm diameter holes within the Open pit which is limited to hours between 11:00 AM and 5:00 PM (6 hours/day). During the winter (i.e., Dec, Jan and Feb) blasting occurs between 4:00 PM and 5:00 PM (1 hour/day) and is restricted to 75,000 kg/blast.

Emulsion is a commonly utilized bulk explosive product that can be used for lateral development and can also be pumped both up and down into stoping blastholes. Emulsion is water resistant, produces low levels of ammonium nitrate in leachate, can be handled in bulk deliveries to reduce costs, has reliable and consistent performance and, depending on the product, can be left in the ground for up to four weeks before firing. Bulk emulsion is proposed as the primary explosive product to be used for both lateral development and stoping (uphole and downhole) at Rainy River.

Emission Methodology - Emission Factor

Drilling USEPA AP-42, Table 11.9-4
Blasting USEPA AP-42, Table 13.3-1

BLASTING	373	m^2 blast area
	95,000	kg emulsion/blast
	1	blast/day
DRILLING	111	holes/shift
	2	shifts/day
	1	hrs/shift

Manufactuer Emission Rates

	Nitrogen oxides (kg/Mg)	**Carbon monoxide (kg/Mg)**
Emulsion Powder	6.4	34

Emission Summary and Dispersion Modelling Report
New Gold - Rainy River Mine
Drilling and Blasting
Emission Estimation

Source ID	Process	Contaminant	CAS RN	Emission Factor	Units	% Control Efficiency	1-Hour Emission Rate (g/s)	24-Hour Emission Rate (g/s)
DRILL	Drilling	Suspended particulate matter	N/A-TSP	0.59	kg/hole	50%	0.758	0.032
BLAST	Blasting	Suspended particulate matter	N/A-TSP	2	kg/blast	50%	0.009	0.00038
BLAST	Blasting	Nitrogen oxides	10102-44-0	6.4	kg/Mg emulsion	50%	3.519	0.147
BLAST	Blasting	Sulphur dioxide	7446-09-5	1	g/kg emulsion	50%	0.550	0.023
BLAST	Blasting	Carbon monoxide	630-08-0	34	kg/Mg emulsion	50%	18.692	0.779

Notes
NOx and CO emission rates provided by manufacturer.
SO_2 emission factor is based on US EPA AP-42 Table 13.3-1 for Explosives Detonation

Sample Calculations

Drilling TSP:

Emission Rate (g/s) = EF (kg/hole) x # holes/shift x # shifts x shifts/12 hr x 24 hr/3600 sec — eq. 3
Emission Rate (g/s) = 0.032

Blasting TSP:

Emission Factor (kg/blast) = 0.00022 x blast area $(m^2)^{1.5}$ = 0.00022 x $(19589\ m^2)^{1.5}$ = 603 kg/blast-hr — eq. 4.1
Emission Rate (g/s) = EF (kg/blast-hr) x 1 blast/day x 1,000 g/kg x 24 hr/3600 sec — eq. 4.2
Emission Rate (g/s) = 0.01
24-hr Emission Rate (g/s) = EF (kg/blast-hr) x 1 blast/day x 1,000 g/kg x 24 hr/3600 sec x 6 hr/24 hr — eq. 5
24-hr Emission Rate (g/s) = 0.00

Blasting NOx:

Emission Factor (kg/blast) = kg of emulsion/blast x # blast/24 hr x EF (g of NOx/kg of emulsion) x 1 hr/3,600 sec — eq. 6
Emission Rate (g/s) = 244,373 emulsion/blast x 1 blast/24 hr x 3.08 g of NOx/kg of emulsion x 1 hr/3,600 sec
24-hr Emission Rate (g/s) = kg of emulsion/blast x # blast/24 hr x EF (g of NOx/kg of emulsion) x 1 hr/3,600 sec x 6 hr/24 hr — eq. 7
24-hr Emission Rate (g/s) = 0.15

Data Quality

Emission Factors: Emission rate estimates that are developed from tests on a reasonable number of facilities where the source category population is sufficiently specific to minimize variability (e.g., US EPA, AP-42, emission factor quality rating of C) are anticipated to provide average quality emission rate estimates.

Emission Summary and Dispersion Modelling Report
New Gold - Rainy River Mine
Road Dust Emissions

Process Description

Haul road traffic dust generated emissions from onsite access roads and pipelines, power infrastructure and fuel storage facilities. For site haul roads, a control efficiency of 98% was used to reflect dust suppression by watering or chemical dust suppressant application, setting and enforcing speed limits for haul trucks, and the use of aggregate with lower silt content for road construction and maintenance. The lower silt content on the roads is a result of hard mine rock being used for the haul roads instead of softer limestone gravel often used in pits and quarries.

Emission Methodology - Emission Factor

Based on AP42 Chapter 13.2 Unpaved Roads for taconite mining

The predicted air quality impacts of emissions of silica as a constituent of respirable dust (PM10). The range of quartz contents within the rock of the Rainy River deposit is similar to that observed for common granite rocks, which have quartz contents that range from 20% to 60%. These types of granitic rocks are a significant component of the rock found throughout northern Ontario. Data from other, similar sites were used to calculate the silica content of the fine fraction. A silica concentration of 7.5% of the PM10 was used in the modelling, based upon the findings of an extensive Ministry of Labour (MOL) study conducted at eight underground mines in northern Ontario (Verma et.al., Respirable Dust and Respirable Silica Exposure in Ontario Gold Mines, Journal of Occupational and Environmental Hygiene, February 2014, pp. 111-114). The ratio of silica in the total PM10 fraction from the MOL study was applied to the PM10 emissions from the site to calculate the predicted silica concentrations.

	Haul Road/Pit	Service/Plant	
Mean Silt Content (%)	5.80	4.3	
Assumed average speed of trucks (km/hr)	50	20	
Assumed control efficiency (%)	98	98	based on watering, lack of silt, dust suppressant

The expected control efficiencies for these measures are:

- **up to 98% for haul road watering or dust suppressant application;**
- up to 80% for limiting truck speeds, and;
- up to 50% for road surface improvements.

Particulate Emission Coefficients for Truck Traffic on Unpaved Industrial Roads

Constant	Expressed Units	TSP	PM10	PM2.5
k	lb/VMT	4.9	1.5	0.15
a	unitless	0.7	0.9	0.9
b	unitless	0.45	0.45	0.45

Road Details

Road ID	Road Description	Tonnes per hour	Load Size (tonnes per truck)	Round Trips per hours	Road Length (km)	Total VKT per hour	Vehicle Empty Weight (tonnes)	Mean Vehicle Weight (ton)	TPM Emission Factor (kg/VKT)	PM10 Emission Factor (kg/VKT)	PM2.5 Emission Factor (kg/VKT)
INPIT_HR	Material from bottom of pit to split	12,500	225	56	1.5	84	160	305	6.65	1.76	0.18
TMA_HR	TMA	1,300	225	6	2	12	160	305	5.39	1.34	0.13
ORE_HR	Ore to Drop at Process	1,300	225	6	0.6	3.6	160	305	5.39	1.34	0.13
LG_HR	LG Ore to Drop at Stockpile	1,300	225	6	0.4	2.4	160	305	6.65	1.76	0.18
NPAG_HR	NPAG from split out of pit	3,000	225	14	1.6	22.4	160	305	6.65	1.76	0.18
OB_HR	OB from split out of pit	1,300	225	6	1.4	8.4	160	305	6.65	1.76	0.18
ORE_MILL_HR	Ore from Underground to Mill	675	225	3	0.5	1.5	102.7	241	4.85	1.21	0.12
LG&PAG_HR	PAG and LG Ore out of Pit	4,500	225	20	1.1	22	160	305	6.65	1.76	0.18
PAG_HR	PAG out of Pit	4,500	225	20	1.1	22	160	305	6.65	1.76	0.18
CONST_HR	Construction Equipment	1,300	175	8	6	48	102.7	213	4.58	1.14	0.11

Data Quality

Emission rate estimates that are developed from tests on a moderate to large number of sources where the source category population is sufficiently specific to minimize variability (e.g., US EPA, AP-42, emission factor quality rating of A or B) are anticipated to provide above-average quality of emission rate est

Sample Calculation

Step 1: Caculation of lb/VKT (from AP42 - Chapter 13.2.2)

E (lb/vkt) (for TSP) = k x (silt %/12)^a x (mean weight/3)^b (see values for k, a, b above) eq. 15

$= 4.9 \times (5.8/12)^{0.7} \times (316/3)^{0.45} = 24$ lb/VKT

Step 2: convert to kg/VKT

E (kg/VKT) = 281.9 g/VKT x 24 lb/VMT/1000 g/kg = 6.65 kg/VKT eq. 16

Step 3: total VKT is obtained from distance travelled x number of round trips per hour x 2.

Total VKT = 1500 m x 56 round trips per hour x 1000 m/km = 84 VK travelled in an hour.

Step 4

Total emission rate (kg/hour) = 84 VKT/hour x 6.65 kg/VKT = 558.24 kg/hour

Step 5

558.24 kg/hour x 1000 g/kg / 3600 s/hour = 155.07 g/s

Step 6

Controlled emission rate (g/s) = 155.07 g/s x (1 - efficiency) = 155.07X (1- 0.98) = 3.10 g/s eq. 17

Emission Summary and Dispersion Modelling Report
New Gold - Rainy River Mine
Road Dust Emissions

Emission Estimation

Road ID	Contaminant	CAS RN	Uncontrolled Emission Rate (kg/hr)	Controlled Emission Rate (g/s)
IN PIT				
INPIT_HR	Suspended particulate matter	N/A-TSP	558.24	3.101
INPIT_HR	Particulate matter < 10 microns	N/A-PM10	147.76	0.821
INPIT_HR	Silica (<10 µm diameter)	14808-60-7	11.08	0.062
INPIT_HR	Particulate matter < 2.5 microns	N/A-PM2.5	14.78	0.082
ORE_HR	Suspended particulate matter	N/A-TSP	19.40	0.108
ORE_HR	Particulate matter < 10 microns	N/A-PM10	4.84	0.027
ORE_HR	Silica (<10 µm diameter)	14808-60-7	0.36	0.002
ORE_HR	Particulate matter < 2.5 microns	N/A-PM2.5	0.48	0.003
OUTSIDE PIT				
TMA_HR	Suspended particulate matter	N/A-TSP	64.68	0.359
TMA_HR	Particulate matter < 10 microns	N/A-PM10	16.13	0.090
TMA_HR	Silica (<10 µm diameter)	14808-60-7	1.21	0.007
TMA_HR	Particulate matter < 2.5 microns	N/A-PM2.5	1.61	0.009
NPAG_HR	Suspended particulate matter	N/A-TSP	148.86	0.827
NPAG_HR	Particulate matter < 10 microns	N/A-PM10	39.40	0.219
NPAG_HR	Silica (<10 µm diameter)	14808-60-7	2.96	0.016
NPAG_HR	Particulate matter < 2.5 microns	N/A-PM2.5	3.94	0.022
OB_HR	Suspended particulate matter	N/A-TSP	55.82	0.310
OB_HR	Particulate matter < 10 microns	N/A-PM10	14.78	0.082
OB_HR	Silica (<10 µm diameter)	14808-60-7	1.11	0.006
OB_HR	Particulate matter < 2.5 microns	N/A-PM2.5	1.48	0.008
LG&PAG_HR	Suspended particulate matter	N/A-TSP	146.21	0.812
LG&PAG_HR	Particulate matter < 10 microns	N/A-PM10	38.70	0.215
LG&PAG_HR	Silica (<10 µm diameter)	14808-60-7	2.90	0.016
LG&PAG_HR	Particulate matter < 2.5 microns	N/A-PM2.5	3.87	0.022
LG_HR	Suspended particulate matter	N/A-TSP	15.95	0.089
LG_HR	Particulate matter < 10 microns	N/A-PM10	4.22	0.023
LG_HR	Silica (<10 µm diameter)	14808-60-7	0.32	0.002
LG_HR	Particulate matter < 2.5 microns	N/A-PM2.5	0.42	0.002
PAG_HR	Suspended particulate matter	N/A-TSP	146.21	0.812
PAG_HR	Particulate matter < 10 microns	N/A-PM10	38.70	0.215
PAG_HR	Silica (<10 µm diameter)	14808-60-7	2.90	0.016
PAG_HR	Particulate matter < 2.5 microns	N/A-PM2.5	3.87	0.022
ORE_MILL_HR	Suspended particulate matter	N/A-TSP	7.27	0.040
ORE_MILL_HR	Particulate matter < 10 microns	N/A-PM10	1.81	0.010
ORE_MILL_HR	Silica (<10 µm diameter)	14808-60-7	0.14	0.001
ORE_MILL_HR	Particulate matter < 2.5 microns	N/A-PM2.5	0.18	0.001
CONST_HR	Suspended particulate matter	N/A-TSP	220.06	1.223
CONST_HR	Particulate matter < 10 microns	N/A-PM10	54.87	0.305
CONST_HR	Silica (<10 µm diameter)	14808-60-7	4.11	0.023
CONST_HR	Particulate matter < 2.5 microns	N/A-PM2.5	5.49	0.030
			Total In Pit TSP Emission Rate (g/s)	**3.21**
			Total Outside Pit TSP Emission Rate (g/s)	**4.47**
			Total TSP Emission Rate (g/s)	**7.68**

Emission Summary and Dispersion Modelling Report
New Gold - Rainy River Mine
Hydrogen Cyanide Emissions

Process Description

Cyanide is used in the leach stage of gold ore processing, and is typically added at a rate of 0.5kg NaCN per tonne of ore. Gravity concentrate is leached in an intense cyanidation reactor, to produce a pregnant solution laden with gold (in solution). The cyanide bonds with gold to form an Au (CN)2- complex allowing the gold to be extracted through adsorption onto activated carbon granules or cementation with zinc powder. Lime is used to buffer the slurry pH to optimise cyanide in solution levels and minimise the formation of HCN gas. The pH in the reactor is maintained at a pH > 11.0 to minimize hydrogen cyanide (HCN) emissions. The site has 8 leach tanks where oxygen and sodium cyanide are added to the slurry in an alkaline environment (pH > 11.0) to prevent cyanide at lower pH from volatilizing to the atmosphere within the mill building. Potential emissions of hydrogen cyanide from the mixing tank are exhausted and emissions from the leach tanks are fugitive. Following leaching, the solution is pumped to 7 Clean In Place (CIP) tanks. Gold dissolved in the cyanide solution is adsorbed onto activated carbon in the CIP circuit for a total retention time of approximately 115 minutes. Potential emissions of hydrogen cyanide from the CIP tanks are fugitive.

Emission Methodology - Engineering Estimation

HCN emissions from process tanks were calculated using the equation from Australia's NPI Emission Estimation Technique Manual for Gold Ore Processing, Version 2.0.

Emission Estimation

Parameter	Leach	CIP	CN Tank	Source of Data
pH	>10.5	>10.5	8 - 8.5	Process Design
[NaCN]	100	75	5	Estimated
$HCN_{(aq)}$	1.6	1.2	0	Calculated
A	2,141	325	214	Process Design
T	24	24	24	Process Design

Source ID	Contaminant	CAS	Emission Rate (g/s)
LEACH1	Hydrogen cyanide	74-90-8	0.027
LEACH2	Hydrogen cyanide	74-90-8	0.027
LEACH3	Hydrogen cyanide	74-90-8	0.027
LEACH4	Hydrogen cyanide	74-90-8	0.027
LEACH5	Hydrogen cyanide	74-90-8	0.027
LEACH6	Hydrogen cyanide	74-90-8	0.027
LEACH7	Hydrogen cyanide	74-90-8	0.027
LEACH8	Hydrogen cyanide	74-90-8	0.027
CIP	Hydrogen cyanide	74-90-8	0.004
HCND1	Hydrogen cyanide	74-90-8	0.003
HCND2	Hydrogen cyanide	74-90-8	0.003

Note:

Volatilisation of HCN accounts for 90% of the natural degradation of cyanide from tailings and is pH dependent as a result of the HCN/CN- flux. At a pH>11 the percentage of natural degredation due to volatilisation is expected to be 0% but as a conservative estimate 10% is estimated.

Sample Calculation

HCN emissions from tanks (g/s) = $([0.013 \times HCN_{(aq)}] + 0.46) \times A \times T \times 0.96 \times 1/10^3) \times 1{,}000$ g/kg x 1d/24 hr x 1 hr/3,600 sec

where,

$[HCN_{(aq)}] = [NaCN] \times 10^{(9.2 - pH)}$ eq. 11

[NaCN] = Concentration (as mg/l) of NaCN in the leach/adsorption tank

pH = pH in the leach/adsorption tank

A = Surface area (m^2) of the leach/adsorption tank

T = Period of emissions (hours)

Data Quality

Emission rate estimates derived from fundamental scientific and engineering principles; and/or relevant empirical data can be considered average data quality estimates.

Emission Summary and Dispersion Modelling Report
New Gold - Rainy River Mine
Ore Material Handling & Crushing

Crushing and Material Loading/Unloading Processes Controlled by Baghouse Dust Collector

Process Description

Higher grade ore from the pit and underground mine is trucked directly to the processing plant for crushing.
The primary crusher building houses the gyratory crusher, surge pocket, apron feeder, and the tail end of the stockpile feed conveyor.
The primary crusher has a design capacity of 1,500 tonnes per hour (tph) and is equipped with a dust collection system to control emissions from screening and crushing.
Ore from the open pit is delivered by truck and dumped directly into one of two dump pockets which feed into the primary crusher.
The ore unloading transfer point is a source of fugitive emissions. Crushed material is conveyed to the crushed ore stockpile as another transfer point and source of fugitve emissions.
Oversized material is reduced in size by a rock breaker.
Emissions from the conveyor drop under the stockpile are controlled by a dust collector.

Emission Methodology - Emission Factor

From Table C-2: Summary of some useful equations and general guidance of the ESDM Procedure Document : An emission factor of 0.01 grains/ft^3 or ~20 milligrams per cubic metre (mg/m^3) of gas can be assumed at the outlet of a fabric filter dust collector. In cases of sites with multiple baghouse (also known as fabric filter dust collectors) discharging simultaneously, an emission factor of 20 mg/m^3 can be assumed for the most significant dust collector and 10 mg/m^3 for the remaining units.

Emission Estimation

Source ID	Process	Contaminant	CAS RN	Flowrate (m^3/s)	Emission Factor (mg/m^3)	Emission Rate (g/s)
CRUSH_DC	Gyratory Crusher Dust Collector	Suspended particulate matter	N/A-TSP	8.26	20	1.65E-01
APRON1_DC	Apron Feeder No.1 Dust Collector	Suspended particulate matter	N/A-TSP	1.44	10	1.44E-02
APRON2_DC	Apron Feeder No.2 Dust Collector	Suspended particulate matter	N/A-TSP	1.44	10	1.44E-02
APRON3_DC	Apron Feeder No.3 Dust Collector	Suspended particulate matter	N/A-TSP	1.44	10	1.44E-02
UNDERPILE_DC	Feed Stockpile (Under Pile) Dust Collector	Suspended particulate matter	N/A-TSP	5.20	10	5.20E-02

Data Quality

Emission rate estimates that are developed from tests on a moderate to large number of sources where the source category population is sufficiently specific to minimize variability (e.g., US EPA, AP-42, emission factor quality rating of A or B) are anticipated to provide above-average quality of emission rate estimates.

Sample Calculation

Crusher Dust Collector

Particulate Emissions (g/s) = emission factor (mg/m^3) x exhaust flowrate (m^3/s) x 1 g/1,000 mg eq. 8
Particulate Emissions (g/s) = 20 mg/m^3 x 8.26 m^3/s x 1 g/1,000 mg
Particulate Emissions (g/s) = 0.1652

Emission Summary and Dispersion Modelling Report
New Gold - Rainy River Mine
Ore Material Handling & Crushing
Fugitive Material Loading & Unloading Processes

Process Description

Emissions from initial ore loading and unloading are fugitive from the open pit to the haul trucks and unloading from the haul trucks to the dump pocket in the primary crusher building and unloading to the various sized ore stockpiles. Crushed material from the primary crusher building is discharged via a conveyor which directs material to the crushed ore stockpile.

Emission Methodology - Emission Factor

US EPA AP-42 Ch. 11.24, Table 11.24-1 Material handling and transfer--all minerals except bauxite. Based on weight of material transferred; applies to each loading or unloading operation and to each conveyor belt transfer point.

Emission Estimation Assumes 80% controls for water spraying

Source ID	Process	Contaminant	CAS RN	Material Handling Rate (Mg/hr)	Uncontrolled Emission Factor (kg/Mg)	24-Hour Emission Rate (g/s)
OPEN PIT MINE						
LOAD PIT	Haul Truck Loading	Suspended particulate matter	N/A-TSP	1,449	5.00E-03	0.40
PRIMARY CRUSHING BUILDING						
UNLOAD CRUSH	Haul Truck Unloading to Dump Pocket	Suspended particulate matter	N/A-TSP	1,449	5.00E-03	0.40
RECLAIM	Conveyor Drop Point for Crushed Ore to Stockpile	Suspended particulate matter	N/A-TSP	1,449	5.00E-03	0.40
OTHER STOCKPILES						
UNLOAD PAG	Haul Truck Unloading at PAG Stockpile	Suspended particulate matter	N/A-TSP	3,825	5.00E-03	1.06
UNLOAD NPAG	Haul Truck Unloading at NPAG Stockpile	Suspended particulate matter	N/A-TSP	6,075	5.00E-03	1.69
UNLOAD OB	Haul Truck Unloading at OB Stockpile	Suspended particulate matter	N/A-TSP	6,075	5.00E-03	1.69
UNLOAD LGORE	Haul Truck Unloading at LGORE	Suspended particulate matter	N/A-TSP	1,350	5.00E-03	0.38

Note:
PAG = potential acid generating
NPAG = non-potential acid generating
OB = Overburden
LGORE = Low-grade Ore

Data Quality

Emission rate estimates that are developed from tests on a reasonable number of facilities where the source category population is sufficiently specific to minimize variability (e.g., US EPA, AP-42, emission factor quality rating of C) are anticipated to provide average quality emission rate estimates.

Sample Calculation

Haul Truck Loading

Particulate Emissions (g/s) = emission factor (kg/Mg) x amount of material handled (tonnes/hr) x 1,000 g/kg x 1 hr/3,600 sec x Control eff % eq. 9
Particulate Emissions (g/s) = 0.005 kg/Mg x 12,500 tonnes per hour x 1,000 g/kg x 1 hr/3,600 sec x 80%
Particulate Emissions (g/s) = 0.40

Emission Summary and Dispersion Modelling Report
New Gold - Rainy River Mine
Metal Content of Mine Rock and Ore

Total TSP ER (g/s) **6.45**

Contaminant	CAS	Mine Rock Samples Summary										Ore Rock Samples Summary						Summary of 90th Percentiles			TSP Emission Rate (g/s)
		Count	Concentration Unit	Minimum	Maximum	Average	Median	Standard Deviation	25th Percentile	75th Percentile	90th Percentile	Count	Concentration Unit	Minimum	Maximum	Average	90th Percentile	Mine Rock	Ore	Aggregate	
Ag	7440-22-4	362	**ppm**	0.02	6.00	0.68	0.40	0.76	0.20	0.80	1.60	509	**ppm**	0.3	284.0	4.4	8.2	0.00016%	0.00082%	0.00010%	5.29E-05
Al	7429-90-5	362	**%**	0.17	6.07	1.79	1.48	1.08	0.94	2.54	3.17	909	**%**	0.1	8.6	2.5	6.9	3.17%	6.93%	3.69%	4.47E-01
As	7440-38-2	362	**ppm**	0.50	345	16.9	8.70	26.7	4.70	20.0	36.8	903	**ppm**	1.0	7,430.0	105.0	138.6	0.0037%	0.0139%	0.0014%	8.94E-04
Au	7440-57-5		**ppm**										**ppm**					0.00004%	0.00015%	0.00004%	9.67E-06
B	7440-42-8	143	**ppm**	20.0	50.0	34.6	30.0	5.79	30.0	40.0	40.0	525	**ppm**	10.0	74.0	37.2	55.0	0.00400%	0.00550%	0.00460%	3.55E-04
Ba	7440-39-3	362	**ppm**	2.00	3220	59.6	29.0	196	20.0	40.0	84.7	904	**ppm**	10.0	930.0	101.0	320.0	0.00847%	0.03200%	0.02220%	2.06E-03
Be	7440-41-7	362	**ppm**	0.10	3.70	0.68	1.00	0.44	0.20	1.00	1.00	193	**ppm**	0.3	75.0	2.4	2.0	0.00010%	0.00020%	0.00010%	1.29E-05
Bi	7440-69-9	362	**ppm**	0.02	27.7	0.59	0.20	1.73	0.10	0.49	1.30	656	**ppm**	0.0	135.0	10.5	25.0	0.00013%	0.00250%	0.00030%	1.61E-04
Ca (as carbonate)	471-34-1	362	**%**	0.08	10.1	2.36	1.82	1.72	1.24	2.82	4.85	909	**%**	0.11	8.70	1.70	3.68	4.85%	3.68%	5.17%	3.33E-01
Cd	7440-43-9	362	**ppm**	0.01	34.6	0.83	0.11	3.46	0.10	0.40	1.19	453	**ppm**	0.0	76.0	8.1	18.0	0.00012%	0.00180%	0.00010%	1.16E-04
Ce	7440-45-1	362	**ppm**	0.90	271	27.8	25.0	28.2	13.8	30.0	44.9	76	**ppm**	4.2	48.0	23.0	36.5	0.00449%	0.00365%	0.00781%	5.04E-04
Co	7440-48-4	362	**ppm**	3.00	66.9	18.7	9.50	15.5	7.90	31.5	43.9	909	**ppm**	2.0	72.0	12.7	35.0	0.00439%	0.00350%	0.00440%	2.84E-04
Cr	7440-47-3	362	**ppm**	12.0	1160	98.0	59.0	139	43.0	76.0	154	906	**ppm**	1.0	614.0	85.0	197.0	0.01537%	0.01970%	0.03650%	2.35E-03
Cs	7440-46-2	362	**ppm**	0.13	59.7	3.10	1.59	4.77	0.80	3.58	7.34	76	**ppm**	0.4	10.7	1.9	4.9	0.00073%	0.00049%	0.00024%	4.71E-05
Cu	7440-50-8	362	**ppm**	3.70	938	74.4	38.3	101.8	18.6	88.0	183	909	**ppm**	3.0	3,357	144	330	0.01831%	0.03296%	0.01936%	2.12E-03
Fe	7439-89-6	362	**%**	0.59	11.5	3.52	2.32	2.51	1.78	4.67	7.81	909	**%**	0.35	13.60	3.60	8.33	7.81%	8.33%	7.56%	5.37E-01
Ga	7440-55-3	362	**ppm**	1.00	16.3	5.66	5.00	3.25	3.00	7.60	10.0	76	**ppm**	1.00	15.00	4.40	10.00	0.00100%	0.00100%	0.00100%	6.45E-05
Ge	7440-56-4	362	**ppm**	0.10	0.50	0.12	0.10	0.06	0.10	0.10	0.20	76	**ppm**	0.10	0.30	0.11	0.20	0.00002%	0.00002%	0.00002%	1.29E-06
Hf	7440-58-6	362	**ppm**	0.05	0.90	0.24	0.20	0.16	0.10	0.30	0.44	76	**ppm**	0.05	0.60	0.27	0.50	0.00004%	0.00005%	0.00005%	3.22E-06
Hg	7439-97-6	362	**ppm**	0.01	2.4	0.08	0.05	0.22	0.01	0.05	0.10	76	**ppm**	0.01	15.70	0.39	0.45	0.00001%	0.00005%	0.00040%	2.58E-05
In	7440-74-6	362	**ppm**	0.01	1.22	0.04	0.02	0.10	0.01	0.03	0.06	76	**ppm**	0.01	11.32	0.29	0.41	0.00001%	0.00004%	0.00000%	2.58E-06
K	7440-09-7	362	**%**	0.01	3.46	0.19	0.12	0.30	0.09	0.18	0.39	909	**%**	0.01	3.76	0.57	1.93	0.39%	1.93%	0.81%	1.24E-01
La	7439-91-0	362	**ppm**	0.50	130	13.5	12.0	13.7	6.00	15.0	22.0	76	**ppm**	1.8	23.3	11.1	17.0	0.00220%	0.00170%	0.00461%	2.97E-04
Li	7439-93-2	362	**ppm**	1.80	215	43.7	36.7	30.3	23.3	57.5	78.9	705	**ppm**	1.0	196.0	34.0	69.0	0.00789%	0.00690%	0.00290%	5.09E-04
Lu	7439-94-3	143	**ppm**	0.01	0.21	0.06	0.04	0.04	0.02	0.08	0.13	11	**ppm**	0.01	0.14	0.06	0.11	0.00001%	0.00001%	0.00002%	1.29E-06
Mg	7439-95-4	362	**%**	0.10	6.39	1.25	0.92	1.00	0.66	1.32	2.69	909	**%**	0.01	5.00	1.00	2.20	2.69%	2.19%	2.84%	1.83E-01
Mn	7439-96-5	362	**ppm**	63.0	2860	754	606	509	391	1020	1458	76	**ppm**	124	2,238	867	1,582	0.14575%	0.15815%	0.16100%	1.04E-02
Mo	7439-98-7	362	**ppm**	0.09	46.2	1.25	0.60	3.03	0.40	1.04	2.30	598	**ppm**	0.16	54.50	5.10	12.00	0.00023%	0.00120%	0.00060%	7.74E-05
Na	7440-23-5	362	**%**	0.01	0.55	0.07	0.04	0.06	0.03	0.09	0.14	905	**%**	0.01	1.50	0.10	0.23	0.14%	0.23%	0.32%	2.06E-02
Nb	7440-03-1	362	**ppm**	0.05	0.70	0.12	0.10	0.07	0.08	0.10	0.20	76	**ppm**	0.05	0.30	0.11	0.20	0.00002%	0.00002%	0.00025%	1.61E-05
Ni	7440-02-0	362	**ppm**	2.40	491	35.8	11.6	55.8	9.10	49.1	79.2	870	**ppm**	1.00	233	18	45	0.00792%	0.00445%	0.01150%	7.41E-04
P	7723-14-0	362	**ppm**	120.00	5640	534	430.00	426	372.50	550	769	859	**ppm**	35	2,898	465	630	0.07690%	0.06304%	0.08000%	5.16E-03
Pb	7439-92-1	362	**ppm**	0.10	555	13.1	3.80	45.9	1.75	8.25	22.1	883	**ppm**	1.00	7,590	103	218	0.00221%	0.02176%	0.00250%	1.40E-03
Rb	7440-17-7	362	**ppm**	0.20	185	7.51	3.95	13.4	2.50	7.25	17.2	76	**ppm**	0.20	33.90	7.21	15.30	0.00172%	0.00153%	0.00222%	1.43E-04
Re	7440-15-5	219	**ppm**	5.00	25.0	5.23	5.00	1.61	5.00	5.00	5.00	65	**ppm**	5.00	7.00	5.03	5.00	0.00050%	0.00050%		3.22E-05
Sb	7440-36-0	362	**ppm**	0.05	18.8	0.41	0.23	1.08	0.10	0.43	0.80	409	**ppm**	0.33	53.00	5.70	11.00	0.00008%	0.00110%	0.00050%	7.09E-05
Sc	7440-20-2	362	**ppm**	0.30	33.5	3.91	1.30	5.10	0.80	5.35	11.2	76	**ppm**	0.30	30.30	2.57	7.90	0.00112%	0.00079%	0.00180%	1.16E-04
Se	7782-49-2	362	**ppm**	0.50	5.50	0.75	0.50	0.41	0.50	1.00	1.00	220	**ppm**	1.00	29.00	6.40	17.00	0.00010%	0.00170%	0.00010%	1.10E-04
Sn	7440-31-5	362	**ppm**	0.10	2.00	0.23	0.20	0.17	0.10	0.30	0.30	108	**ppm**	0.30	96.00	7.10	22.00	0.00003%	0.00220%	0.00005%	1.42E-04
Sr	7440-24-6	362	**ppm**	6.00	1840	65.4	45.0	106	28.3	73.0	124	909	**ppm**	6.00	660	64	130	0.01238%	0.01302%	0.02430%	1.57E-03
Ta	7440-25-7	362	**ppm**	0.05	0.10	0.08	0.10	0.02	0.05	0.10	0.10	76	**ppm**	0.05	0.10	0.09	0.10	0.00001%	0.00001%	0.00001%	6.45E-07
Tb	7440-27-9	143	**ppm**	0.05	2.54	0.22	0.15	0.24	0.12	0.25	0.44	11	**ppm**	0.09	0.32	0.18	0.30	0.00004%	0.00003%	0.00004%	2.58E-06
Te	13494-80-9	362	**ppm**	0.05	11.3	0.48	0.20	1.03	0.10	0.50	1.10	76	**ppm**	0.05	12.20	0.96	2.79	0.00011%	0.00028%	0.00280%	1.81E-04
Th	7440-29-1	362	**ppm**	0.10	17.1	1.65	1.50	1.77	0.73	1.90	2.59	76	**ppm**	0.10	4.20	1.40	2.10	0.00026%	0.00021%	0.00200%	1.29E-04
Ti	7440-32-6	362	**%**	0.01	0.51	0.05	0.02	0.06	0.01	0.07	0.12	76	**%**	0.01	0.23	0.03	0.08	0.12%	0.08%	0.42%	2.71E-02
Tl	7440-28-0	362	**ppm**	0.02	1.75	0.12	0.10	0.13	0.06	0.10	0.23	266	**ppm**	0.01	0.99	0.10	0.24	0.00002%	0.00002%	0.00100%	6.45E-05
U	7440-61-1	362	**ppm**	0.05	2.10	0.26	0.20	0.23	0.10	0.30	0.40	460	**ppm**	0.22	1,115	30	20	0.00004%	0.00200%	0.00100%	1.29E-04
V	7440-62-2	362	**ppm**	2.00	668	52.3	13.0	75.7	6.00	78.8	160	897	**ppm**	1.00	613	40	102	0.01599%	0.01024%	0.01182%	1.03E-03
W	7440-33-7	362	**ppm**	0.10	94.9	0.97	0.10	5.66	0.10	0.20	1.28	277	**ppm**	0.20	149	16	37	0.00013%	0.00374%	0.00100%	2.41E-04
Y	7440-65-5	362	**ppm**	0.60	40.8	4.23	2.87	3.63	2.10	5.23	9.30	680	**ppm**	1.00	27.00	4.00	8.00	0.00093%	0.00080%	0.00109%	7.03E-05
Yb	7440-64-4	143	**ppm**	0.10	1.50	0.38	0.20	0.30	0.20	0.50	0.80	11	**ppm**	0.10	1.00	0.40	0.90	0.00008%	0.00009%	0.00011%	7.09E-06
Zn	7440-66-6	362	**ppm**	7.00	6930	241	91.0	689	56.0	183	340	909	**ppm**	2.00	16,867	881	2,550	0.03398%	0.25500%	0.01640%	1.64E-02
Zr	7440-67-7	362	**ppm**	0.40	50.3	9.20	7.40	6.97	5.03	11.8	17.0	909	**ppm**	2.00	16,867	881	2,550	0.00170%	0.25500%	0.00160%	1.64E-02

Emission Summary and Dispersion Modelling Report
New Gold - Rainy River Mine
Mill Process and Miscellaneous Sources

CN Destruction

Process Description

The cyanide destruction area is located outside the main processing building. Following the leaching process, gold that is dissolved in the cyanide solution is adsorbed onto activated carbon in the CIP circuit. Loaded carbon is transferred to the gold recovery circuit while tailings from the CIP circuit are sent to the cyanide destruction tanks (Source ID HCND).

Liquid sulphur dioxide (SO2) is received and transferred by a closed loop system to sealed tanks. A SO2/air process is used for in-plant treatment of tailings in the cyanide destruction tank where cyanide and metallo-cyanide complexes are oxidized to cyanate ion using copper sulphate as a catalyst. Emissions from loading of copper sulphate and mixing are controlled by a dust collection system (Source ID DC6). The cyanate then reacts with water to form ammonia and carbon dioxide. Free metal ions are precipitated with the addition of lime to form insoluble metal hydroxides and will adsorb onto tailings particle solids, eventually settling out of the slurry in the tailings management area. Excess SO2 is used in the process to ensure complete stoichiometric oxidation of cyanide. It was assumed excess SO2 is emitted fugitively from the destruction tank (Source ID HCND).

The cyanide destruction process is detailed in the following reactions:

$CN^- + SO_2(g) + H_2O + O_2(g) \rightarrow CNO^- + H_2SO_4(aq)$
$CNO^- + 2H_2O \rightarrow OH^- + NH_3 + CO_2$
Metal $(CN)_{xy}$-x + $xSO_2(g) + xH_2O + xO_2(g) \rightarrow xCNO^- + xH_2SO_4(aq)$ + Metaly+

The Site uses excess SO_2 of 2% to ensure that the reaction is complete.

SO_2 Use for CN destruction Truck Delivery Storage Tank	0.612	kg/t ore feed
	19,584	kg/day
	7,148	tonnes/year
	887	**kg/hr**
	28	tonnes per truck
	122.4	tonnes
	0.02	**% excess**

Emission Methodology - Mass Balance

SO_2 is consumed as part of the CN Destruction process. The excess SO_2 is used to ensure that the reaction is complete. All excess SO_2 has been considered to be discharged to the

Data Quality

The data quality is considerd to be above average as a mass balance approach was used that assumes all excess SO_2 is discharged to the atmosphere.

Sample Calculation

Emission Rate (g/s) = SO_2 Consumption Rate (kg/hr) x Excess SO_2 (%) x Excess SO_2 Discharged (%) x (1 hr / 3600 s) x (1000 g / 1 kg) eq. 12
= (887 kg/hr) x (2%) x (100%) x (1 hr / 3600 s) x (1000 g / 1 kg)
= 2.46

Emission Estimation

Process	Source ID	Contaminant	CAS RN	Emission Rate (g/s)
CN Destruction	HCND1	Sulphur dioxide	7446-09-5	2.46
CN Destruction	HCND2	Sulphur dioxide	7446-09-5	2.46

Lime Bin Baghouse

Process Description

Calcium oxide is received in a storage bin and emissions from handling are controlled by a cartridge bin vent (Source ID DC4). The lime slaker converts calcium oxide to calcium hydroxide with the addition of water to produce a slurry. Lime is used to control pH in the leach tanks (this optimizes cyanide ion solution levels and minimizes formation of hydrogen cyanide gas as well as pH control in the cyanide destruction circuit.

Induction Furnace

Process Description

Metal impurities in the ore charged to the induction furnace include very low copper content, and potentially minor amounts of zinc and iron. Only a minor quantity of particulate matter would be generated from the pouring operation. The dust collection system is designed to capture all fumes from the induction furnace and casting, as the exhaust may contain trace quantities of valuable gold and silver which can be recovered from the filters. These impurities are predominately taken up in the slag and were therefore considered to be insignificant emissions from the dust collector exhaust. Flux is mixed into the sludge and the resulting mixture is dried and smelted in the induction furnace. Emissions from the furnace are controlled by a dry cartridge filter (Source ID DC3).

Pebble Crushing Area

Process Description

Oversized material from the SAG slurry passes through a pebble crusher before being returned to the SAG mill. The slurry is pumped from the milling circuit to a cluster of cyclones. Emissions from the pebble crushing area are controlled by a wet scrubber system (Source ID EF1).

Copper Sulphate Dust Collector

Process Description

Liquid sulphur dioxide (SO_2) is received and transferred by a closed loop system to sealed tanks. A SO_2/air process is used for in-plant treatment of tailings in the cyanide destruction tank where cyanide and metallo-cyanide complexes are oxidized to cyanate ion using copper sulphate as a catalyst. Emissions from loading of copper sulphate and mixing are controlled by a dust collection system (Source ID DC6).

Emission Summary and Dispersion Modelling Report
New Gold - Rainy River Mine
Mill Process and Miscellaneous Sources

Flocculant
Process Description
Flocculant is added to the thickener feed in the pre-leach thickener feed. Emissions from the addition of flocculant are controlled by a baghouse dust collector (Source ID DC5).

Sodium Metabisulphate Loading
Process Description
A dust collector has been installed to handle emissions associated with the handling of sodium metabisulphite at the Gold Recovery Area.

Baghouse Emissions Methodology - Emission Factor
Per ESDM Procedure Document, an emission factor of 0.01 grains/ft^3 or ~20 milligrams per cubic metre (mg/m^3) of gas can be assumed at the outlet of a fabric filter dust collector. In cases of sites with multiple baghouse (also known as fabric filter dust collectors) discharging simultaneously, an emission factor of 20 mg/m^3 can be assumed for the most significant dust collector and 10 mg/m^3 for the remaining units.

The Induction Furnace Baghouse is the largest baghouse at the Site, an emission factor of 20 mg/m^3 was conservatively used to estimate emissions from this baghouse. The remaining

Data Quality
Emission rate estimates that are developed from tests on a moderate to large number of sources where the source category population is sufficiently specific to minimize variability (e.g., US EPA, AP-42, emission factor quality rating of A or B) are anticipated to provide above-average quality of emission rate estimates.

Sample Calculation

Emission Rate (g/s) = Baghouse Outlet Concentration (mg/m^3) x Stack Flow Rate (m^3/s) x (1 g / 1000 m eq. 13
Emission Rate (g/s) = (20 mg/m^3) x (1.9 m^3/s) x (1 g / 1000 mg)
Emission Rate (g/s) = 0.0190

Emission Estimation

Source ID	Process	Contaminant	CAS RN	Flowrate (m^3/s)	PM Concentration (mg/m^3)	Emission Rate (g/s)
DC4	Lime Bin Baghouse	Suspended particulate matter	N/A-TSP	3.00E-03	10	3.00E-05
DC4	Lime Bin Baghouse	Calcium oxide	1305-78-8	3.00E-03	50%	1.50E-05
DC3	Induction Furnace	Suspended particulate matter	N/A-TSP	1.90E+00	10	1.90E-02
EF1	Pebble Crushing Area	Suspended particulate matter	N/A-TSP	6.20E+00	16	9.92E-02
DC6	Copper Sulphate Dust Collector	Suspended particulate matter	N/A-TSP	1.20E+00	10	1.20E-02
DC6	Copper Sulphate Dust Collector	Copper sulphate	7758-99-8	1.20E+00	50%	6.00E-03
DC5	Flocculant	Suspended particulate matter	N/A-TSP	3.80E-01	10	3.80E-03
DC7	Sodium Metabisulphate Loading	Suspended particulate matter	N/A-TSP	8.87E-01	10	8.87E-03
DC7	Sodium Metabisulphate Loading	Sodium metabisulfite	7681-57-4	8.87E-01	50%	4.42E-03

Propane Heating

Process Description
Propane heaters are located throughout the process building for comfort heating (Source ID SPACEHEAT). Propane is also used to heat ventilation air in the underground mine and combustion emissions are vented through the two portals (Source ID PORT1, PORT2).

Emission Methodology - Emission Factor
Per the ESDM Procedure Document, only NOx was considered to a significant contaminat from the combustion of propane. Emissions from the combustion of propane were estimated using emission factors in U.S. EPA P-42 Chapter 1.5

Emission Factor	13	lb/1000 gal.
	0.013	lb/gal.

Data Quality
The data quality is considered to be marginal as the emission factor has a rating of 'E'.

Sample Calculation
Plant Building Heating eq. 14

Emission Rate (g/s) = Total Fuel Consumption Rate (L/hr) x Emission Factor (lb/1,000 gal) x % of total area x (453.59 g/lb) x (1 hr/3,600 sec)
Emission Rate (g/s) = (1,271 L/hr) x (13 lb/1,000 gal) x 58% of total area x (453.59 g/lb) x (1 hr / 3,600 s)
Emission Rate (g/s) = 0.32

Emission Estimation

Source ID	Process	Contaminant	CAS RN	Fuel Consumption Rate (L/hr)	Building Area (m^2)	Percent of Total Area	Emission Rate (g/s)
COMFORT HEATING							
SPACEHEAT1	Propane Heating - Plant Building	Nitrogen oxides	10102-44-0	1,271	10,133	58%	0.317
SPACEHEAT2	Propane Heating - Admin Building	Nitrogen oxides	10102-44-0	1,271	932	5%	0.029
SPACEHEAT3	Propane Heating - Mineoff Building	Nitrogen oxides	10102-44-0	1,271	1,296	7%	0.041
SPACEHEAT4	Propane Heating - Shop Building	Nitrogen oxides	10102-44-0	1,271	5,220	30%	0.163
PROCESS HEATING							
PORT1	Underground Mine Portal 1	Nitrogen oxides	10102-44-0	3,225	N/A	N/A	0.698
PORT2	Underground Mine Portal 2	Nitrogen oxides	10102-44-0	3,225	N/A	N/A	0.698
Total							**1.395**

Emission Summary and Dispersion Modelling Report
New Gold - Rainy River Mine
Wind Erosion at Stockpiles and TMA

Process Description
Stockpiles of overburden, run of mine ore, low-grade ore and mine rock are expected to have fugitive emissions due to wind erosion in addition to the Tailings Management Area (TMA).

Emission Methodology - Emission Factor
The Australian NPI Emission Estimation Technique Manual for Mining Version 3.0 provides a factor of 0.4 kg/ha/hr for TSP. The SPCC (1983) average value for wind erosion is 0.4 kg/ha/hr (3,504 kg/ha/year). It is suggested that this value be adopted as a default in the absence of other information.

Control methods for wind erosion from stockpiles
80% for water sprays
30% for wind breaks
99% for total enclosure
30% for primary earthworks (reshaping/profiling, drainage structures installed)
30% for rock armour and/or topsoil applied
30% for primary rehabilitation
40% for vegetation established but not demonstrated to be self-sustaining. Weed control and grazing control.
60% for secondary rehabilitation
90% for revegetation
100% for fully rehabilitated (release) vegetation

Emission Factor	0.4	kg/ha/hr
	1.11E-05	$g/s/m^2$

Data Quality
Emission Factors: Emission rate estimates that are developed from tests on only a small number of facilities where there is evidence of variability within the source category population (e.g., US EPA, AP-42, emission factor quality rating of D or E) and/or the emission factor rating is uncertain are considered to have uncertain data quality.

Sample Calculation
WMRS (Mix of OVB and NPAG)

Controlled emission rate (g/s) = Active Stockpile Area (m^2) x uncontrolled emission factor ($g/s/m^2$) x control eff. % eq. 18
Controlled emission rate (g/s) = 1,731,772 m^2 x 1.11 x 10^{-5} $g/s/m^2$ x 80%
Controlled emission rate (g/s) = 1.92

Emission Estimation

Location	Source ID	Stockpile Description	Material	Contaminant	CAS RN	Active Stockpile Area (m^2)	Control	Control Efficiency (%)	Controlled Emission Factor ($g/s/m^2$)	Emission Rate (g/s)
WMRS	WMRS	Mix of OVB & NPAG	NPAG	Suspended particulate matter	N/A-TSP	865,886	Water Sprays	80%	2.22E-06	1.92E+00
WMRS	LD4	NAG Quarry and Road	NPAG	Suspended particulate matter	N/A-TSP	55,227	Water Sprays	98%	2.22E-07	1.23E-02
EMRS	CONST STK	Mix of OVB & PAG, high OVB pct.	PAG	Suspended particulate matter	N/A-TSP	71,749	Water Sprays	80%	2.22E-06	1.59E-01
EMRS	OC1	NAG Quarry and Pad	PAG	Suspended particulate matter	N/A-TSP	338,414	Water Sprays	80%	2.22E-06	7.52E-01
EMRS	LGO	OVB/HPAG w/ PAG Cap, then LG/MG	PAG	Suspended particulate matter	N/A-TSP	404,918	Water Sprays	80%	2.22E-06	9.00E-01
EMRS	MGO	PAG (20 m avg.)	PAG	Suspended particulate matter	N/A-TSP	36,144	Water Sprays	80%	2.22E-06	8.03E-02
EMRS	EMRS S	Mix of OVB & PAG, high OVB pct. (18 m avg.)	PAG	Suspended particulate matter	N/A-TSP	680,601	Water Sprays	80%	2.22E-06	1.51E+00
EMRS	EMRS N	Mix of OVB & PAG, high OVB pct.	PAG	Suspended particulate matter	N/A-TSP	197,616	Water Sprays	80%	2.22E-06	4.39E-01
EMRS	BTR	PAG Buttress	PAG	Suspended particulate matter	N/A-TSP	186,962	Water Sprays	80%	2.22E-06	4.15E-01
EMRS	MCL	Mix of OVB & PAG, high OVB pct.	PAG	Suspended particulate matter	N/A-TSP	65,979	Water Sprays	80%	2.22E-06	1.47E-01
EMRS	PAG_ROAD	PAG Road	PAG	Suspended particulate matter	N/A-TSP	31,853	Water Sprays	98%	2.22E-07	7.08E-03
EMRS	CREEK FILL	NPAG Creek Fill (5 m avg.)	NPAG	Suspended particulate matter	N/A-TSP	20,596	Water Sprays	80%	2.22E-06	4.58E-02
TMA	TMA	Tailings	TAIL	Suspended particulate matter	N/A-TSP	3,121,552	Rock Armour & Water Sprays	98%	2.22E-07	6.94E-01
Other	PIT	Mix of OVB & NPAG	All	Suspended particulate matter	N/A-TSP	1,051,892	Water Sprays	80%	2.22E-06	2.34E+00
Other	NPAG_ROAD	NPAG (as shown, plus up to TMA corner)	NPAG	Suspended particulate matter	N/A-TSP	207,452	Water Sprays	98%	2.22E-07	4.61E-02
Other	ROM STK	HGO/MGO Stockpile - NPAG Base	NPAG	Suspended particulate matter	N/A-TSP	19,882	Water Sprays	80%	2.22E-06	4.42E-02
Other	EOC	Rock Quarry	NPAG	Suspended particulate matter	N/A-TSP	82,986	Water Sprays	98%	2.22E-07	1.84E-02

Emission Summary and Dispersion Modelling Report
New Gold - Rainy River Mine
Maintenance Welding

Process Description
Repairs to vehicles and heavy machinery such as loaders are carried out at the Maintenance Shop. Exhausts are fugitive.

Emission Methodology - Emission Factor
Welding emisisons were calculated using U.S. EPA AP-42 emission factors for electric arc welding using E7018, E70S, and E71T electrodes.

Data Quality
Emission rate estimates that are developed from tests on only a small number of facilities where there is evidence of variability within the source category population (e.g., US EPA, AP-42, emission factor quality rating of D or E) and/or the emission factor rating is uncertain are considered to have uncertain data quality.

Sample Calculation

PM emissions from SMAW (g/s) = Maximum SMAW Electrode Usage (kg/day) x Emission Factor (g/kg) x 1 (day/24 h) x eq. 26
PM emissions from SMAW (g/s) = (2 kg/day) x (18.4 g/kg) x 1 (day/24 h) x (1 h/3600 s)
PM emissions from SMAW (g/s) = 0.00043

Type	Maximum Daily Usage (kg/day)
SMAW	2
GMAW	0.5
FCAW	22
Other [1]	10

[1] Maximum emission factor for SMAW, GMAW and FCAW used

Emission Estimation

			Emission Factor				Emission Rate				
Source ID	Contaminant	CAS Number	SMAW (g/kg)	GMAW (g/kg)	FCAW (g/kg)	Other (g/kg)	SMAW (g/s)	GMAW (g/s)	GCAW (g/s)	Other (g/s)	Total Emission Rate (g/s)
WELD	Suspended particulate matter	N/A-TSP	18.4	5.2	12.2	18.4	4.26E-04	3.01E-05	3.11E-03	2.13E-03	5.69E-03
WELD	Chromium compounds (metallic, divalent and trivalent forms)	7440-47-3	0.006	0.001	0.002	0.006	1.39E-07	5.79E-09	5.09E-07	6.94E-07	1.35E-06
WELD	Cobalt	7440-48-4	0.001	0.001	0.001	0.001	2.31E-08	5.79E-09	2.55E-07	1.16E-07	3.99E-07
WELD	Manganese and manganese	7439-96-5	1.03000	1.25E-05	0.66	1.03	2.38E-05	7.23E-11	1.69E-04	1.19E-04	3.12E-04
WELD	Nickel and nickel compounds	7440-02-0	0.002	0.001	0.004	0.004	4.63E-08	5.79E-09	1.02E-06	4.63E-07	1.53E-06

APPENDIX F. OTHER SUPPORTING DOCUMENTATION

PubMed

Format: Abstract

J Occup Environ Hyg. 2014;11(2):111-6. doi: 10.1080/15459624.2013.843784.

Respirable dust and respirable silica exposure in Ontario gold mines.

Verma DK[1], Rajhans GS, Malik OP, des Tombe K.

Author information

Abstract

A comprehensive survey of respirable dust and respirable silica in Ontario gold mines was conducted by the Ontario Ministry of Labor during 1978-1979. The aim was to assess the feasibility of introducing gravimetric sampling to replace the assessment method which used konimeters, a device which gave results in terms of number of particles per cubic centimeter (ppcc) of air. The study involved both laboratory and field assessments. The field assessment involved measurement of airborne respirable dust and respirable silica at all eight operating gold mines of the time. This article describes the details of the field assessment. A total of 288 long-term (7-8 hr) personal respirable dust air samples were collected from seven occupational categories in eight gold mines. The respirable silica (α-quartz) was determined by x-ray diffraction method. The results show that during 1978-1979, the industry wide mean respirable dust was about 1 mg/m(3), and the mean respirable silica was 0.08 mg/m(3.)The mean% silica in respirable dust was 7.5%. The data set would be useful in future epidemiological and health studies, as well as in assessment of workers' compensation claims for occupational diseases such as silicosis, chronic obstructive pulmonary disease (COPD), and autoimmune diseases such as renal disease and rheumatoid arthritis.

PMID: 24369933 DOI: 10.1080/15459624.2013.843784

[Indexed for MEDLINE]

Publication type, MeSH terms, Substances

LinkOut - more resources

PubMed Commons

PubMed Commons home

0 comments

FORM

amec

TITLE:	SUPPLIER DOCUMENT FRONT SHEET	DOC. NO.:	DOC-FOR-000037 Rev. 1
PROJECT NAME:	Rainy River	PROJECT NO.:	100126

Energy Technology Products	100126-PJ090	Dust Collector Equipment Data Sheet
Company Name	*PO/Contract Number*	*Package/Contract Description*

Gyratory Crusher Dust Collector and Exhaust Fan Equipment Data Sheet
Document Title

3	23-Apr-15	Hetty Bolt	HBolt
Total Number of Pages (Including Front Sheet)	*Submission Date*	*Submitted By - Print Name*	*Supplier Approval - Signature*

3110-BH-0001	3110-FA-0002	

Secondary SDDRL Code(s)

VDN 19	4	100126-PJ090-D02-0001.001	004
Supplier/Contractor Document Number	*Supplier Rev.*	*AMEC Project Document No.*	*AMEC Issue No.*

Note: This FRONT SHEET is to be used for all non-drawing documents and if the drawing does not have sufficient space for an electronic decal.

Project Review:

Permission to proceed does not constitute acceptance of design, calculations, test methods or materials developed or selected by Seller and does not relieve Seller from full compliance with contractual or other obligations.

- [x] 1. REVIEWED - NO COMMENT
- [ ] 2. REVISE AND RESUBMIT - WORK MAY PROCEED SUBJECT TO INCORPORATION OF COMMENTS
- [ ] 3. REVISE AND RESUBMIT - WORK MAY NOT PROCEED
- [ ] 4. REVIEW NOT REQUIRED - FOR INFORMATION ONLY

AMEC Signature — *Date* 28 APR '15

Data Sheet

newgold Rainy River Resources Ltd. amec

Title	DUST COLLECTION BAGHOUSE	Proj Doc No.	100126-3110-DE40-DAT-0500
Proj Name	Rainy River Gold Project	AMEC Doc. No.	N/A
Client	Newgold Rainy River Resources Ltd.	Proj No.	100126 — Rev: C
Supplier	AWBS No.	Plant/Area No 3140.	Pkg No.
Tag No(s).	3110-BH-0001 & 3110-FA-0002		Qty: 1
Item Desc	Gyratory Crusher Dust Collector and Gyratory Crusher Dust Collector Exhaust Fan		

1	**DESIGN DATA**			
2	**LOCATION, SITE AND OPERATING CONDITIONS**			
3	✓ Indoor ☐ Outdoor ☐ Heated ✓ Unheated		Site Elevation: 350 m (1150ft) Above Sea Level	
4	Certification: CSA or ULC		Electrical Classification: None	
5	✓ Winterization Required ☐ Tropicalization Required		Seismicity: See Site Design Conditions Design Criteria	
6	Environment: ☐ Toxic ✓ Dusty ☐ Corrosive ☐ Flammable		Operation: ✓ Continuous ☐ Intermittent	
7	Operating schedule: (hr/day) 24 Days/Year 336		No. Starts per Hour: N/A	No. Starts per Day: N/A
8				
9	**PROCESS OPERATING PARAMETERS**			
10	Description: Gold Mine Ore Crushing		Max. Noise Level (dBa) at 1.0 m, 85 dBa	
11	Ore Moisture Content: 3%			
12	Ore Material Specific Gravity: 2.85 t/m³			
13	Volume Flow Rate L/s (ACFM) 10,294 L/s (17,500)		Dust Distribution: 50% in 2-7 microns particle range	
14	Min. Design Temp. (Ambient Condition) ºC (ºF) -33 (-27.4)		Inlet Dust Load g/m³ (grains/dry ft³): 12 g/m³ (5.25 grains/ft³)	
15	Max. Design Temp. (Ambient Condition) ºC (ºF) 35 (95)		Outlet Dust Load mg/m³ (grains/dry ft³): 16 mg/m³ (0.007 grains/ft³)	
16	**INFORMATION REQUIRED WITH BIDS**			
17		**SPECIFIED BY AMEC**	**AS SUPPLIED BY VENDOR**	
18	**General**			
19	Manufacturer	By Vendor	Donaldson / Torit	
20	Make / Model Number	By Vendor	VH 2-12	
21	Paint / Finish	By Vendor	Vendor standard 2,000 finish	
22	**Housing Section**			
23	Housing Material	By Vendor	Carbon steel	
24	Housing Material Thickness	By Vendor	3/16" plate to 10 gauge steel	
25	Access Doors	By Vendor	duty hinged and gasketed w/ De-staco style latches.	
26	Lifting Lugs	By Vendor	yes	
27	Filter / Fan Access Platform	By Vendor	No- RFQ asks for floor mounted fan	
28	**Hopper Section**			
29	Hopper Material	CS	CS	
30	Hopper Material Thickness	10 Ga	10 Ga	
31	Hopper Slope	60º	60 deg.	
32	Hopper Access Doors	Required	Yes- bolted	
33	Mounting Legs	Required	es not required. Mounting brackets as requested provided	
34	Hopper Dimensions L x W x H	By Vendor	~101.25" x 80" x 75"	
35	**Fan**			
36	Flow Rate L/s (ACFM)	10,294 L/s (17,500)	29750 M3/m (17500 CFM)	
37	External Static Pressure (ESP) Pa (in.wg.)	1500 (6.0)	6" wg	
38	Total Static Pressure (TSP) Pa (in.wg.)	By Vendor	12" wg TP @ 0.0918 lbs / CF density	
39	Manufacturer	By Vendor	New York Blower	
40	Make / Model Number	By Vendor	RTS size 368	
41	Type / Arrangement	By Vendor	Arr. 1	
42	Material	By Vendor	Mild Steel	
43	Class	By Vendor	4	
44	Fan Wheel Diameter / Type of Blades	By Vendor	36" / Radial Tip	
45	Drive Type	V-Belt	V-Belt	
46	Fan BHP at Operating Point	By Vendor	49	
47	Fan Efficiency %	By Vendor	72.49%	
48	Outlet Velocity m/s (ft/s)	By Vendor	3451 ft/min	
49	Fan Speed m/s (ft/s)	By Vendor	1363 RPM	
50	Equipment Noise Level dBa	85 dBa @1.0 m (3ft)	less than 85 dBA w/ outlet silencer	
51	Fan Siilencer if required	By Vendor	yes	
52	Bearings L10 Rating, > 100,000 hr	Required	yes	
53	Guards	OSHA	Included	
54	Extended SS Lube Lines	Required	Included	
55	**Fan Motor**			
56	Electrical Service	575/3/60	575/3/60	
57	Manufacturer	By Vendor	TECO	
58	Motor Type	Premium Efficiency IEEE 841	Yes	
59	Fan Motor Size and Speed, kW (HP), RPM	By Vendor	60 HP	
60	Completed Motor Nameplate Data	Required	With order	
61	Fan and Motor Weight kg (lbs)	By Vendor	1578 Kgs (3500 lbs)	
62	**Filter Section**			
63	Number of Bags / Cartridges Qty.	By Vendor	12	
64	Total Filter Area m² (ft²)	By Vendor	724 M (2376 sq ft)	
65	Air to Cloth Ratio	By Vendor	7.36:1	
66	Filter Media Type	By Vendor	Powercore Spundbond	
67	Overall Efficiency	99.9% @ 1 micron	Merv 15	
68	Filter Pressure Drop Pa (in.wg.)	By Vendor	4-6" wg loaded	

Data Sheet

Title	**DUST COLLECTION BAGHOUSE**		**Proj Doc No.**	**100126-3110-DE40-DAT-0500**	
Proj Name	**Rainy River Gold Project**		**AMEC Doc. No.**	**N/A**	
Client	**Newgold Rainy River Resources Ltd.**		**Proj No.**	**100126**	**Rev: C**
Supplier		**AWBS No.**	**Plant/Area No 3140.**	**Pkg No.**	
Tag No(s).	**3110-BH-0001 & 3110-FA-0002**			**Qty:**	**1**
Item Desc	**Gyratory Crusher Dust Collector and Gyratory Crusher Dust Collector Exhaust Fan**				

69	Housing Material and Thickness	By Vendor	3/16" plate to 10 gauge steel	
70	Auto Cleaning Mechanism Assembly	Pulse-Jet	Pulse-Jet	
71				
72	**Compressed Air**			
73	Compressed Air Pressure kPa (PSIG)	By Vendor	90-100 PSI	
74	Compressed Air Consumption Sm^3/hr (SCFM)	By Vendor	34 Sm3/hr (20 SCFM)	
75	**Air Lock Section**			
76	Manufacturer	By Vendor	Torit	
77	Size	By Vendor	10	
78	Model Number	By Vendor	AN	
79	Motor and Drive	By Vendor	Yes	
80	Motor Size, kW (HP), RPM, V/Ph/Hz	By Vendor	0.75 KW (1 HP) 1800/575/3	
81	Motor Type	Premium Efficiency IEEE 841	Yes	
82				
83	**Electrical and Controls**			
84	Power Supply	575/3/60	575/3/60	
85	Control Voltage	120 Volt	120 v	
86	Main Starters and Disconnects	By Owner	N/A	
87	Control Panel	NEMA 4	Nema 4	
88	Control Circuit Transformer	By Vendor	yes	
89	Control Circuit Fuses	By Vendor	yes	
90	Control Relays	By Vendor	yes	
91	Pressure Sensors	By Vendor	yes	
92	LED Lights	By Vendor	yes	
93	Timers	By Vendor	yes	
94	Dry Contact (Unit Status suitable for Plant PCS Connection)	By Vendor	yes	
95	Dry Contact (Common Alarm suitable for Plant PCS Connection)	By Vendor	yes	
96	One Dry Contact (Connection to Fire Alarm and Unit Shutdown)	By Vendor	yes	
97	**Shipping Data**			
98	Ovrall Dimensions (L x W x H) m (ft)	By Vendor	1460x1089x962 (574x428x379)	
99	Overall Weight kg (lbs)	By Vendor	4602 Kgs (10,145 lbs)	
100	Largest Section (L x W x H) m (ft)	By Vendor	1257x927x787 (495x365x310)	
101	Largest Section Weight kg (lbs)	By Vendor	2900 Kgs (6393 lbs)	
102	Winterization Required	By Vendor	Outdoor storage with tarp will be sufficient	
103				

Notes

1. Bidders must duly complete the "As Supplied by Vendor" column, even if spec. is met. Please indicate meeting spec by "OK".
2. Bidders not meeting specifications are strongly encouraged to bid and indicate proposed deviation from spec in "Vendor" column.
3. Equipment must comply with Engineering Specification 100126-3200-DE40-SPE-0007

Unless otherwise agreed in a written contract between AMEC and its client: (i) this AMEC document contains information, data and design that is confidential and may not be copied or disclosed; and (ii) this document may only be used by the client in the context and for the express purpose for which it has been delivered. Any other use or reliance on this document by any third party is at that party's sole risk and responsibility.

Rev	Date	Revision/Issue Description	Prepared	Checked	Approved	Client
A	11 Jul 2014	Issued for Squad Check	DT		DT	
B	25 Aug 2014	Issued for Client Approval	DT	SC	GC	
C	25 Sep 2014	Issued for Tender	FZ	SD	GC	

FORM

TITLE:	**SUPPLIER DOCUMENT FRONT SHEET**	DOC. NO.:	DOC-FOR-000037 Rev. 1
PROJECT NAME:	**Rainy River Project**	PROJECT NO.:	**100126**

FLSmidth	**100126-PJ060**	**Gyratory Crusher**
Company Name	*PO/Contract Number*	*Package/Contract Description*

CRUSHER DATA SHEET
Document Title

11	**16-Sep-16**	**ROSA**	RB
Total Number of Pages (Including Front Sheet)	*Submission Date*	*Submitted By - Print Name*	*Supplier Approval - Signature*

Equipment Tag Number(s)

Secondary SDDRL Code(s)

GC Data Sheet	**2**	**100126-PJ060-D01-0001.001**	**02**
Supplier/Contractor Document Number	*Supplier Rev.*	*AMEC Project Document No.*	*AMEC Issue No.*

Note: This FRONT SHEET is to be used for all non-drawing documents and if the drawing does not have sufficient space for an electronic decal.

Project Review:

Permission to proceed does not constitute acceptance of design, calculations, test methods or materials developed or selected by Seller and does not relieve Seller from full compliance with contractual or other obligations.

- ☐ 1. REVIEWED - NO COMMENT
- ☐ 2. REVISE AND RESUBMIT - WORK MAY PROCEED SUBJECT TO
- ☐ 3. REVISE AND RESUBMIT - WORK MAY NOT PROCEED
- ☐ 4. REVIEW NOT REQUIRED - FOR INFORMATION ONLY

SUPPLIER REVIEW amec

1 REVIEWED AND ACCEPTED WITH NO COMMENT.

PERMISSION TO PROCEED DOES NOT CONSTITUTE ACCEPTANCE OF DESIGN, CALCULATIONS, TEST METHODS OR MATERIAL DEVELOPED OR SELECTED BY SELLER AND DOES NOT RELIEVE SELLER FROM FULL COMPLIANCE WITH CONTRACTUAL OR OTHER OBLIGATIONS.

Ko, Susanna
02:55 PM, 05/10/2016

AMEC Signature *Date*

BBA	Rainy River Resources Ltd. RAINY RIVER GOLD PROJECT 3098004-003110-45-EDS-0001-00	RAINYRIVER

DATASHEET

Gyratory Crusher

Prepared by:	Verified by:	Approved by:
Josie Di Benedetto, Eng. OIQ Member No.: 116858	Sebastian Humphrey, Eng. OIQ Member No.: 5017890	David F. Runnels, P Eng. PEO Member No.: 100205623
	Jean Lavoie, P. Eng. PEO Member No.: 100088272	Client Approval

LICENSED PROFESSIONAL ENGINEER
25-2-14
D. F. RUNNELS
100205623
PROVINCE OF ONTARIO

Note: This document supersedes document No. 3098004-004110-45-EDS-0001

Rev.	Date	Revision Description	By	Ver.	Appr.	Client
00	2014-02-25	Issued for Purchase	JDB	SH/JL	DR	KM

All rights reserved. © 2014 BBA

BBA	**DATASHEET**	RAINY RIVER
	Gyratory Crusher **3098004-003110-45-EDS-0001-00**	

DESCRIPTION	UNITS	DATA
General		
Equipment name	-	Gyratory Crusher
Equipment number	-	3110-CR-0001
Equipment location	-	Outdoors & uncovered
Ambient temperature	°C	-35 to +29
Duty	-	Extra Heavy Duty, continuous
Number of units	-	1
Application	-	Crushing ROM gold ore prior to stockpiling and grinding
Size	mm x mm	1,400 x 2,100
Feed opening, minimum	mm (in)	1,400 (55'')
Design motor power, minimum	kW	320
Motor installed	kW	596
Ore Characteristics		
Mineral type	-	Gold ore
Mineral SG	t/m^3	2.85
Ore bulk density	kg/m^3	1.60
Crusher work index		
▪ Range (10 to 90th percentile)	kWh/t	12.7 - 27.6
▪ Design (80th percentile)	kWh/t	25.0
Drop weight test (A x b, SMC)		
▪ Range (10 to 90th percentile)		20.7 – 38.5
▪ Design (80th percentile)		24.2
Abrasion index		
▪ Range (10 to 90th percentile)		0.09 – 0.38
▪ Design (80th percentile)		0.25
Moisture content, design	(%)	3.0

Operating Conditions		
Days/year		365
Hours/day		24
Overall crusher system availability	%	85
Overall crusher system utilization	%	65
Effective operating (crushing) time	hours/year	5,700
Mining method		Open pit, drill and blast
Feed size		
▪ Maximum lump	mm	1,050-1,100
▪ F_{80}	mm	550-600
Method of feed control		Mine dump truck loader and shovel
Annual throughput (dry basis)	tonnes	7,665,000
Crusher throughput (dry basis)		
▪ Average	t/h	1,346
OSS (range)	mm	150 - 165
Crusher discharge P_{100}	mm	300 - 350
Crusher discharge P_{80}	mm	165
Crusher feed truck capacity	metric tonnes	226
Crusher dump points		2
Truck dump rate	trucks/hour	4
Splitter		No
Dump pocket capacity	tonnes	485
Dump pocket capacity	trucks	2.1
Discharge surge pocket capacity	tonnes	440
Discharge surge pocket capacity	trucks	1.9

BBA	Rainy River Resources Ltd. RAINY RIVER GOLD PROJECT 3098004-003110-45-ETQ-0001-00	RAINYRIVER

TECHNICAL QUESTIONNAIRE

Gyratory Crusher

Prepared by:

Josie Di Benedetto, Eng.
OIQ Member No.: 116858

Verified by:

Sebastian Humphrey, Eng.
OIQ Member No.: 5017890

Approved by:

LICENSED PROFESSIONAL ENGINEER
14-02-25
D. F. RUNNELS
100205623
PROVINCE OF ONTARIO

David F. Runnels
PEO Member No.: 100205623

Client Approval

Note: This document supersedes document No. 3098004-004110-45-ETQ-0001

Rev.	Date	Revision Description	By	Ver.	Appr.	Client
00	2014-02-25	Issued for Purchase	JDB	SH	DR	KM

All rights reserved. © 2014 BBA

TECHNICAL QUESTIONNAIRE
Gyratory Crusher
3098004-003110-45-ETQ-0001-BB

		BBA Datasheet	FLSmidth
Equipment Name: Gyratory Crusher	**Units**	**3098004-003110-45-EDS-0001**	**Equipment Number: 3110-CR-0001**

Notes to the Bidder
Bidder is requested to complete the data in the right hand column, as thoroughly as possible.
Do not change description in left hand column or modify units of measure.

General			
· Vendor			FLSmidth Inc.
· Manufacturer			
· Type			"TSU" Top Service Gyratory Crusher
· Model No. / Size			1,400 x 2,100 TSU
· Motor power			600 kW
· Manufacturer location of components (specify component & location)			See Proposal
Ore Characteristics			
· Mineral type		Gold Ore	
· Mineral SG	t/m³	2.85	
· Ore bulk density	t/m³	1.60	
· Crusher work index - Range (10th to 90th percentile)	kWh/t	12.7 - 27.6	
· Crusher work index - Average (50th percentile)	kWh/t	18.0	
· Crusher work index - Design (80th percentile)	kWh/t	25.0	
· Drop weight test (A x b, SMC) - Range (10th to 90th percentile)		20.7 - 38.5	
· Drop weight test (A x b, SMC) - Design (80th percentile)		24.2	
· Abrasion index - Range (10th to 90th percentile)		0.09 - 0.38	
· Abrasion index - Design (80th percentile)		0.25	
· Moisture content, Design	%	3.0	
Operating Conditions			
· Days/year		365	
· Hours/day		24	
· Overall crusher system availability	%	85	
· Overall crusher system utilization	%	65	
· Effective operating (crushing) time	hrs/yr	5,700	
· Annual throughput, (dry basis)	t	7,665,000	
· Crusher throughput, (dry basis) - Average	t/h	1346	
· OSS (range)	mm	150 - 165	
· Crusher discharge, P100	mm	300 - 350	
· Crusher discharge, P80	mm	165	
· Crusher feed truck capacity		220	
· Crusher dump points		2	
· Truck dump rate (initial)	trucks/hr	4	
· Dump pocket capacity (tonnes / trucks)		485 / 2.1	
· Discharge surge pocket capacity (tonnes / trucks)		440 / 1.9	
Performance			
Open Side Settings at Various Throws			
· Design eccentric throw	mm		38.1 mm
· Maximum available eccentric throw	mm		38.1 mm
· Minimum available eccentric throw	mm		32 mm
Operating Data at Various O.S.S.			
· Open side setting	mm		152 mm
· Recommended eccentric throw	mm		38.1 mm
· Capacity at constant feed	t/h		1,740 mtph
· Gyrations per minute			152 rpm
· Pinion shaft speed	rpm		600 rpm
· Pinion shaft power required	kW		600 kW
Crusher Discharge P_{100}	mm		390 mm, Max*
Crusher Discharge P_{80} - Average	mm		165 mm, Average
		*Note: While the P100 listed in the Technical Questionnaire for FLSmidth is 390 mm (higher than the PDC of 350 mm), this is only for material with a Wi of 25 kWt/h. Based on the FLSmidth PSD distributions, the P98 for this material would be 300 mm and there is little to no material accounted for between 330-400 mm. Also the P100 of the material with Wi values of 14 kWh/t and 18 kWh/t are below the design of 350 mm.	

TECHNICAL QUESTIONNAIRE
Gyratory Crusher
3098004-003110-45-ETQ-0001-BB

		BBA Datasheet	FLSmidth
Equipment Name: Gyratory Crusher	**Units**	**3098004-003110-45-EDS-0001**	**Equipment Number: 3110-CR-0001**
Notes to the Bidder Bidder is requested to complete the data in the right hand column, as thoroughly as possible. Do not change description in left hand column or modify units of measure.			
General Technical Data			
Feed Opening	mm		1,400 mm
Sizes and Loads			
Height:			
· Overall	mm		8,075 mm
· Base to spider rim top	mm		4,177 mm
· Base to spider cap top	mm		6,102 mm
· Base to hydraulic main shaft positioning cylinder bottom	mm		1,973 mm
· From base for main shaft removal	mm		11,043 mm
· From base for eccentric removal	mm		5,709 mm removed from the top of the crusher
Width:			
· Maximum diagona at supports	mm		5,515.5 mm
· Spider rim diameter	mm		5,368 mm
· Base	mm		3,900 mm
· From centreline for pinion shaft removal	mm		3,850 mm
Dynamic Loads:			
· Horizontal at support base	kgf		6,220 kgf
· Moment at base in vertical plane	kgf-m		38,647 kgf-m
Mounting			Anchor Bolts
Drive type			Direct Drive
Total estimated erection man-hours			3,360 man-hours
Torque limiter			Yes, torque limiting coupling on drive shaft
Shells			
Top Shell, describe			Cast Steel ASTM A27 or equal
Bottom Shell, describe			Cast Steel ASTM A27 or equal
Splits horizontally			Yes, 2 Splits; 3 Shells, top, middle and bottom
Material, construction			Cast Steel ASTM A27 or equal
Number of sections			3
· Top shell	kg		33,956 kg
· Middle shell	kg		37,795 kg
· Bottom shell	kg		26,155 kg
Bottom Shell Arm Liners			
· Material, describe			Cast Manganese Steel, ASTM A128 and abrasion-resistant Steel Lukens 500
· Weight	kg		650 kg
· Thickness	mm		25 - 75 mm
Spider			
Material			Cast Steel ASTM A27 or equal
Construction			Cast
Weight	kg		13,614 kg
Arm Liners			
· Number			2
· Material, describe			Cast Manganese Steel, ASTM A128
· Weight	kg		1,780 kg per Spider Shield
· Thickness	mm		90 mm
Rim Liners			
· Number			Six (6) Top Shell Rim liners, Four (4) Web Liners
· Material, describe			Abrasion-resistant Steel Lukens 500
· Weight	kg		2,826 kg
· Thickness	mm		50 mm

TECHNICAL QUESTIONNAIRE
Gyratory Crusher
3098004-003110-45-ETQ-0001-BB

		BBA Datasheet	FLSmidth
Equipment Name: Gyratory Crusher	**Units**	**3098004-003110-45-EDS-0001**	**Equipment Number: 3110-CR-0001**

Notes to the Bidder
Bidder is requested to complete the data in the right hand column, as thoroughly as possible.
Do not change description in left hand column or modify units of measure.

Spider Cap			
· Material, describe			Cast Manganese Steel, ASTM A128
· Weight	kg		2,077 kg
· Thickness	mm		90 mm
Spider Bushing			
· Material, describe			Bronze ASTM A584 or equal
· Weight	kg		598 kg
· Thickness	mm		43.4 mm - average
Main Shaft			
Material			Forged Carbon Steel ASTM A668 or Equal
Construction			Forged - Main Shaft is a 3-piece design (main shaft, core and mantles)
Head centre			FLS refers to this as Core, dimensions listed below
Weight	kg		21,595 kg
Overall length	mm		6,064 mm
Diameter			
· Maximum	mm		940 mm
· In spider bearing	mm		580 mm
· In eccentric bearing	mm		800 mm
Main Shaft Sleeve			
· Material			Medium Carbon Steel AISI 1045
· Dimensions	mm		O.D. 639.6 x Length 1155 mm
Diameter Core			
· Upper	mm		745 mm
· Lower	mm		1,693 mm
· Height	mm		2,980 mm
· Weight	kg		14,921 kg
Mantle			
Material			Cast Manganese Steel, ASTM A128
Number of Sections			2
Weight	kg		11,830 kg, Total
Bottom Diameter	mm		2,100 mm
Thickness	mm		77 - 127 mm
Backing Material, Type			Epoxy FLS D-BAK
Backing Material, Weight	kg		614 kg
Concaves			
Material			Cast Manganese Steel, ASTM A128
Number of Rows			3
Segment per Row			16
Maximum Thickness	mm		95 - 130 mm
Total Concave Weight	kg		19,328 kg
Backing Material, Type			Epoxy FLS D-BAK
Backing Material, Weight	kg		1426 kg
Eccentric			
Material			Cast Steel ASTM A27 or equal
Diameter, Inner	mm		860 mm
Diameter, Outer	mm		1,020 mm
Length	mm		1,470 mm
Throw	mm		38.1 mm
Weight	kg		3,070 kg
Eccentric Bearing Inner			
· Material			Bronze ASTM A584 or equal
· Diameter, inner	mm		803.2 mm
· Diameter, outer	mm		859.9 mm
· Length	mm		1,300 mm
· Weight	kg		859 kg

TECHNICAL QUESTIONNAIRE
Gyratory Crusher
3098004-003110-45-ETQ-0001-BB

		BBA Datasheet	FLSmidth
Equipment Name: Gyratory Crusher	**Units**	**3098004-003110-45-EDS-0001**	**Equipment Number: 3110-CR-0001**

Notes to the Bidder
Bidder is requested to complete the data in the right hand column, as thoroughly as possible.
Do not change description in left hand column or modify units of measure.

Bevel Gear and Pinion Gear			
· Material			Forged Alloy Steel ASTM A291
· Pitch diameter	mm		1,820
· Number of teeth			Gear 74, Pinion 19
· Diametrical pitch			0.87
· Hardness (BHN)	BHN		269 - 415 BHN
· Method of hardening			Through-hardened
· Face width	mm		185 mm
· Bevel angle	°		26
· Pressure angle	°		20 degrees
· AGMA durability rating			4.5
· AGMA strength rating			3.04
· AGMA quality			Q8
· Connection type to shaft			Key
Main Shaft Step			
· Diameter	mm		689.75 mm
· Thickness	mm		50 mm
· Weight	kg		171 kg
Step Washer			
· Diameter	mm		750 mm
· Thickness	mm		94 mm
· Weight	kg		201 kg
Pinion Wearing Plate			
· Diameter	mm		750 mm
· Thickness	mm		50 mm
· Weight	kg		140 kg
Eccentric Support Bearing			
· Material			Bronze ASTM A584 or Equal
· Diameter, inner	mm		1,245 mm
· Diameter, outer	mm		1,399 mm
· Thickness	mm		49 mm
Dust Seal			
· Describe			Two (2) rings, one is steel the other is nylatron with packing material between them. It is part of the main shaft assembly and contacts the dust seal bonnet to impede dust
Dust Seal Blower			
· Blower motor size	kW /rpm/ V-ph-Hz		1.5 kW / per site spec
· Air volume each	m^3/min		4.5 m^3/min
Pinion Shaft Assembly			
Bearings			
· Number of bearings			2
· Type			Tapered Roller
· Diameter, inner	mm		235 mm
· Diameter, outer	mm		384 mm
· Width	mm		112 mm
· Type of seals			Open Bearing
· B10 life			100,000 hr
· Lubrication			Oil
Pinion Shaft			
· Material			Forged Carbon Steel ASTM A668 or Equal
· Shaft length	mm		1671 mm
· Shaft diameter	mm		259 mm
· Weight	kg		568 kg

TECHNICAL QUESTIONNAIRE
Gyratory Crusher
3098004-003110-45-ETQ-0001-BB

		BBA Datasheet	FLSmidth
Equipment Name: Gyratory Crusher	**Units**	**3098004-003110-45-EDS-0001**	**Equipment Number: 3110-CR-0001**

Notes to the Bidder
Bidder is requested to complete the data in the right hand column, as thoroughly as possible.
Do not change description in left hand column or modify units of measure.

Lubrication System			
· Manufacturer			Trolladyne or Howard Martin
· Oil tank volume	Litres		2460 l
Oil Pumps			
· Number, operating / standby			One (1) operating / One (1) standby
· Type			Screw Pump
· Oil flow (capacity)	Lpm		303 l/m
· Operating pressure	kPa		2,068 kPa
· Lube Pump Motor	kW /rpm/ V-ph-Hz		22.5 kW / 1800 rpm / per site spec
Filter Type			Duplex
· Size			75 mm diameter
· Manufacturer			Hilcoa or equivalent
· Filter mesh size	µm		50 µm
· Maximum pressure	kPa		2,068 kPa
Heating System			
· Number of heaters			Three (3) standard / One (1) additional is optional
· Type			Tube Electric Heaters
· Rating	kW		5
· Heat to be dissipated	kJ/h		17,500 kJ/h
Cooling System			
· Type			Air-to-Oil Heat Exchangers
· Manufacturer			Young Touchstone or equivalent
· Model			OCS-2500
· Number			2
· Fan motor size	kW /rpm/ V-ph-Hz		22.5 kW / 1,200 rpm / per site spec
· Maximum air inlet temperature	°C		41 C
· Heat to be dissipated	kJ/h		323,990 kJ/h (max)
Lube Tank Capacity	Litres		2460 l
· Oil residence time	mins		8 min
Protective Instrumentation, describe		Refer to drawing	document No.: 80035975 in FLSMidth's IOM Manual
Lubricant Recommendations			ISO VG 320
Circulating Oil Specifications			ISO VG 320
Hydraulic Main Shaft Positioning System			
· Hydraulic pump capacity	Lpm		17 l/m
· Pump motor	kW /rpm/ V-ph-Hz		5.6 kW / 1,800 rpm / per site spec
· Pump standby			Optional
· Hydraulic oil tank capacity	liters		568 l
· Heated reservoir			Yes
· Oil residence time	mins		N/A
· Balance cylinder			Yes
· Main shaft travel	mm		304 mm
· Shaft position indicator			Yes
· Protective devices			Accumulator
· Pressure relief valves			Yes
· Filter, fitting, valves, piping	Yes/No		Yes
· Lubrication recommendations			ISO VG 320
Spider Lubrication			
· Lubricant type			Grease, Summer: NLGI #1, Winter: NLGI #0
· Air requirements			Electric Pump Unit
Main Drive Motor			

TECHNICAL QUESTIONNAIRE
Gyratory Crusher
3098004-003110-45-ETQ-0001-BB

		BBA Datasheet	FLSmidth
Equipment Name: Gyratory Crusher	**Units**	**3098004-003110-45-EDS-0001**	**Equipment Number: 3110-CR-0001**
Notes to the Bidder Bidder is requested to complete the data in the right hand column, as thoroughly as possible. Do not change description in left hand column or modify units of measure.			
Torque Design			
· Full load torque	N-m		Refer to Motor Datasheet
· Starting torque, % of full load			Refer to Motor Datasheet
· Breakdown torque, % of full load			Refer to Motor Datasheet
Direct Drive			
Couplings - Manufacturer			Voith
· Size			114 mm
· Type			SR-PF-177
Jackshaft Diameter	mm		190 mm
Jackshaft Length	mm		1,214 mm
Slip Detection Device			Yes
Drive Service Factor			1.5
Controls and Instrumentation			
Describe		Refer to drawing/document No.: 80035975 in FLSMidth's IOM Manual	
Switches/Transmitters			
Enclosure			
Painting			
· Paint Manufacturer			Carboline 859/ Carbothane 134HG or equivalent
· Primer coat type and dry film thickness			Epoxy Primer w/ minimum four (4) mils
· Top coat and dry film thickness			Aliphatic Acrylic Polyurethane w/minimum three (3) mils
· Top coat colour and code			Color 4184 (Caribbean Blue)
Anchor Bolts			
· Quantity			4
· Size			To be sized per applicable standards, and station design.
· ASTM Standard			ASTM F1554
Instrumentation			
· For all proposed instruments, please list manufacturer and model number for each			Refer to drawing/document No.: 80035975 in FLSMidth's IOM Manual
Factory Acceptance Test (FAT) Requirements			
· Provide list of all anticipated FAT/SAT requirements			Per ITP
Shipping and Handling			
Cyratory Crusher Weight	kg		250,000 kg
Complete Lubrication System	kg		9,100 kg, wet
Maximum Shipping Weight	kg		Middle Shell, 37,868 kg
Maximum Shipping Size (W x L x H)			4.5 x 4.5 x 2.3 m
Heaviest item to be handled in erection (identify and give weight)	kg		Main Shaft Assembly, 49,025 kg
Heaviest item to be handled during maintenance (identify and give weight)	kg		Main Shaft Assembly, 49,025 kg
Other			
Minimum Operating Design Life			20 years

FORM

amec

TITLE:	SUPPLIER DOCUMENT FRONT SHEET	DOC. NO.:	DOC-FOR-000037 Rev. 1
PROJECT NAME:	Rainy River	PROJECT NO.:	100126

Energy Technology Products	100126-PJ090	Apron Feeder No.1 and Fan Data Sheet
Company Name	*PO/Contract Number*	*Package/Contract Description*

Apron Feeder No. 1 Dust Collector and Exhaust Fan Equipment Data Sheet
Document Title

3	23-Apr-15	Hetty Bolt	HBolt
Total Number of Pages (Including Front Sheet)	*Submission Date*	*Submitted By - Print Name*	*Supplier Approval - Signature*

3140-BH-0010	3140-FA-0104	

Secondary SDDRL Code(s)

VDN 20	3
Supplier/Contractor Document Number	*Supplier Rev.*

100126-PJ090-D02-0002.001	003
AMEC Project Document No.	*AMEC Issue No.*

Note: This FRONT SHEET is to be used for all non-drawing documents and if the drawing does not have sufficient space for an electronic decal.

Project Review:

Permission to proceed does not constitute acceptance of design, calculations, test methods or materials developed or selected by Seller and does not relieve Seller from full compliance with contractual or other obligations.

- [x] 1. REVIEWED - NO COMMENT
- [ ] 2. REVISE AND RESUBMIT - WORK MAY PROCEED SUBJECT TO INCORPORATION OF COMMENTS
- [ ] 3. REVISE AND RESUBMIT - WORK MAY NOT PROCEED
- [ ] 4. REVIEW NOT REQUIRED - FOR INFORMATION ONLY

AMEC Signature

28 APR 2015

Date

Data Sheet

newgold Rainy River Resources Ltd.

amec

Title	DUST COLLECTION BAGHOUSE	Proj Doc No.	100126-3140-DE40-DAT-0501
Proj Name	Rainy River Gold Project	AMEC Doc. No.	N/A
Client	Newgold Rainy River Resources Ltd.	Proj No.	100126 — Rev: C
Supplier	AWBS No.	Plant/Area No 3140.	Pkg No.
Tag No(s).	3140-BH-0010 & 3140-FA-0104		Qty: 1
Item Desc	Apron Feeder No. 1 Dust Collector and Apron Feeder No. 1 Dust Collector Exhaust Fan		

1	**DESIGN DATA**			
2	**LOCATION, SITE AND OPERATING CONDITIONS**			
3	☑ Indoor ☐ Outdoor ☐ Heated ☑ Unheated		Site Elevation: 350 m (1150ft) Above Sea Level	
4	Certification: CSA or ULC		Electrical Classification: None	
5	☑ Winterization Required ☐ Tropicalization Required		Seismicity: See Site Design Conditions Design Criteria	
6	Environment: ☐ Toxic ☑ Dusty ☐ Corrosive ☐ Flammable		Operation: ☑ Continuous ☐ Intermittent	
7	Operating schedule: (hr/day) 24 Days/Year 336		No. Starts per Hour: N/A	No. Starts per Day: N/A
8				
9	**PROCESS OPERATING PARAMETERS**			
10	Description: Gold Mine Ore Crushing		Max. Noise Level (dBa) at 1.0 m, 85 dBa	
11	Ore Moisture Content: 3%			
12	Ore Material Specific Gravity: 2.85 t/m³			
13	Volume Flow Rate L/s (ACFM)	L/s (3,050)	Dust Distribution: 50% in 2-7 microns particle range	
14	Min. Design Temp. (Ambient Condition) ºC (ºF)	-33 (-27.4)	Inlet Dust Load g/m³ (grains/dry ft³): 12 g/m³ (5.25 grains/ft³)	
15	Max. Design Temp. (Ambient Condition) ºC (ºF)	29 (84.2)	Outlet Dust Load g/m³ (grains/dry ft³): 16 mg/m³ (0.007 grains/ft³)	
16	**INFORMATION REQUIRED WITH BIDS**			
17		**SPECIFIED BY AMEC**	**AS SUPPLIED BY VENDOR**	
18	**General**			
19	Manufacturer	By Vendor	Donaldson / Torit	
20	Make / Model Number	By Vendor	CPV-12	
21	Paint / Finish	By Vendor	vendor standard 2,000 hour finish	
22	**Housing Section**	By Vendor		
23	Housing Material	By Vendor	Carbon Steel	
24	Housing Material Thickness	By Vendor	12 gauge	
25	Access Doors	By Vendor	Top Access doors	
26	Lifting Lugs	By Vendor	Yes	
27	Filter / Fan Access Platform	By Vendor	fan mounts directly to side, bin vent configuration	
28	**Hopper Section**			
29	Hopper Material	CS	N/A- bin vent	
30	Hopper Material Thickness	10 Ga	N/A- bin vent	
31	Hopper Slope	60º	N/A- bin vent	
32	Hopper Access Doors	Required	N/A- bin vent	
33	Mounting Legs	Required	N/A- bin vent	
34	Hopper Dimensions L x W x H	By Vendor	N/A- bin vent	
35	**Fan**			
36	Flow Rate L/s (ACFM)	1,440 (3,050)	5185 M3/m (3050 CFM)	
37	External Static Pressure (ESP) Pa (in.wg.)	750 (3.0)	249 (1)	
38	Total Static Pressure (TSP) Pa (in.wg.)	By Vendor	1497 (6")	
39	Manufacturer	By Vendor	New York Blower	
40	Make / Model Number	By Vendor	GI size 224	
41	Type / Arrangement	By Vendor	4V	
42	Material	By Vendor	Carbon Steel	
43	Class	By Vendor	4	
44	Fan Wheel Diameter / Type of Blades	By Vendor	Radial	
45	Drive Type	V-Belt / Direct Drive	Direct Drive	
46	Fan BHP at Operating Point	By Vendor	3.53 KW	
47	Fan Efficiency %	By Vendor	56.4%	
48	Outlet Velocity m/s (ft/s)	By Vendor	4034 FPM	
49	Fan Speed m/s (ft/s)	By Vendor	1750 RPM	
50	Equipment Noise Level dBa	85 dBa @1.0 m (3ft)	less than 85 dBA w/ silencer	
51	Fan Siilencer if required	By Vendor	Yes	
52	Bearings L10 Rating, > 100,000 hr	Required	N/A- direct drive	
53	Guards	OSHA	N/A- direct drive	
54	Extended SS Lube Lines	Required	N/A- direct drive	
55	**Fan Motor**			
56	Electrical Service	575/3/60	575/3/60	
57	Manufacturer	By Vendor	TECO	
58	Motor Type	Premium Efficiency IEEE 841	Yes	
59	Fan Motor Size and Speed, kW (HP), RPM	By Vendor	5.5 KW (7.5 HP) 1755 RPM	
60	Completed Motor Nameplate Data	Required	OK	
61	Fan and Motor Weight kg (lbs)	By Vendor	204 Kgs (450 lbs)	
62	**Filter Section**			
63	Number of Bags / Cartridges Qty.	By Vendor	12	
64	Total Filter Area m² (ft²)	By Vendor	245 M (804)	
65	Air to Cloth Ratio	By Vendor	3.79	
66	Filter Media Type	By Vendor	PowerCore Spunbond	

Data Sheet

newgold Rainy River Resources Ltd.

amec

Title	DUST COLLECTION BAGHOUSE		Proj Doc No.	100126-3140-DE40-DAT-0501	
Proj Name	Rainy River Gold Project		AMEC Doc. No.	N/A	
Client	Newgold Rainy River Resources Ltd.		Proj No.	100126	Rev: C
Supplier		AWBS No.	Plant/Area No 3140.	Pkg No.	
Tag No(s).	3140-BH-0010 & 3140-FA-0104			Qty:	1
Item Desc	Apron Feeder No. 1 Dust Collector and Apron Feeder No. 1 Dust Collector Exhaust Fan				

67	Overall Efficiency	99.9 % @ 1 micron	Yes	
68	Filter Pressure Drop Pa (in.wg.)	By Vendor	4-5" wg	
69	Housing Material and Thicness	By Vendor	12 guage	
70	Auto Cleaning Mechanism Assembly	Pulse-Jet	Pulse Jet	
71				
72	**Compressed Air**			
73	Compressed Air Pressure kPa (PSIG)	By Vendor	90-100	
74	Compressed Air Consumption Sm³/hr (SCFM)	By Vendor	34 Sm3/hr (20 SCFM)	
75	**Air Lock Section**			
76	Manufacturer	By Vendor	N/A- bin vent	
77	Size	By Vendor	N/A- bin vent	
78	Model Number	By Vendor	N/A- bin vent	
79	Motor and Drive	By Vendor	N/A- bin vent	
80	Motor Size, kW (HP), RPM, V/Ph/Hz	By Vendor	N/A- bin vent	
81	Motor Type	Premium Efficiency IEEE 841	N/A- bin vent	
82				
83	**Electrical and Controls**			
84	Power Supply	575/3/60	yes	
85	Control Voltage	120 Volt	yes	
86	Main Starters and Disconnects	By Owner		
87	Control Panel	NEMA 4	yes	
88	Control Circuit Transformer	By Vendor	yes	
89	Control Circuit Fuses	By Vendor	yes	
90	Control Relays	By Vendor	yes	
91	Pressure Sensors	By Vendor	yes	
92	LED Lights	By Vendor	yes	
93	Timers	By Vendor	yes	
94	Dry Contact (Unit Status suitable for Plant PCS Connection)	By Vendor	yes	
95	Dry Contact (Common Alarm suitable for Plant PCS Connection)	By Vendor	yes	
96	One Dry Contact (Connection to Fire Alarm and Unit Shutdown)	By Vendor	yes	
97	**Shipping Data**			
98	Ovrall Dimensions (L x W x H) m (ft)	By Vendor	261.5x3236.5x11160.7 (128.47x128.22x86.21)	
99	Overall Weight kg (lbs)	By Vendor	659Kgs (1452 lbs)	
100	Largest Section (L x W x H) m fFt)	By Vendor	1116x741.7x998.7 (44x30x40)	
101	Largest Section Weight kg (lbs)	By Vendor	585Kgs (1290 lbs)	
102	Winterization Required	By Vendor	Outdoor Storage with tarp is sufficicent	
103				

Notes

1. Bidders must duly complete the "As Supplied by Vendor" column, even if spec. is met. Please indicate meeting spec by "OK".
2. Bidders not meeting specifications are strongly encouraged to bid and indicate proposed deviation from spec in "Vendor" column.
3. Equipment must comply with Engineering Specification 100126-3200-DE40-SPE-0007

Unless otherwise agreed in a written contract between AMEC and its client: (i) this AMEC document contains information, data and design that is confidential and may not be copied or disclosed; and (ii) this document may only be used by the client in the context and for the express purpose for which it has been delivered. Any other use or reliance on this document by any third party is at that party's sole risk and responsibility.

Rev	Date	Revision/Issue Description	Prepared	Checked	Approved	Client
A	11 Jul 2014	Issued for Squad Check	DT		DT	
B	25 Aug 2014	Issued for Client Approval	DT	SC	GC	
C	25 Sep 2014	Issued for Tender	FZ	SD	GC	
O	03 Mar 2015	Issued for PO				

FORM

amec

TITLE:	SUPPLIER DOCUMENT FRONT SHEET	DOC. NO.:	DOC-FOR-000037 Rev. 1
PROJECT NAME:	Rainy River	PROJECT NO.:	100126

Energy Technology Products	100126-PJ090	Apron Feeder No. 2 and Fan Data Sheet
Company Name	*PO/Contract Number*	*Package/Contract Description*

Apron Feeder No. 2 Dust Collector and Exhaust Fan Equipment Data Sheet
Document Title

3	23-Apr-15	Hetty Bolt	HBolt
Total Number of Pages (Including Front Sheet)	*Submission Date*	*Submitted By - Print Name*	*Supplier Approval - Signature*

			Secondary SDDRL Code(s)
3140-BH-0011	3140-FA-0105		

VDN 21	3	100126-PJ090-D02-0003.001	003
Supplier/Contractor Document Number	*Supplier Rev.*	*AMEC Project Document No.*	*AMEC Issue No.*

Note: This FRONT SHEET is to be used for all non-drawing documents and if the drawing does not have sufficient space for an electronic decal.

Project Review:

Permission to proceed does not constitute acceptance of design, calculations, test methods or materials developed or selected by Seller and does not relieve Seller from full compliance with contractual or other obligations.

- [x] 1. REVIEWED - NO COMMENT
- [ ] 2. REVISE AND RESUBMIT - WORK MAY PROCEED SUBJECT TO INCORPORATION OF COMMENTS
- [ ] 3. REVISE AND RESUBMIT - WORK MAY NOT PROCEED
- [ ] 4. REVIEW NOT REQUIRED - FOR INFORMATION ONLY

AMEC Signature — *Date*: 28 APR 2015

Data Sheet

newgold Rainy River Resources Ltd.

amec

Title	DUST COLLECTION BAGHOUSE	Proj Doc No.	100126-3140-DE40-DAT-0502
Proj Name	Rainy River Gold Project	AMEC Doc. No.	N/A
Client	Newgold Rainy River Resources Ltd.	Proj No.	100126 — Rev: C
Supplier	AWBS No.	Plant/Area No 3140.	Pkg No.
Tag No(s).	3140-BH-0011 & 3140-FA-0105		Qty: 1
Item Desc	Apron Feeder No.2 Dust Collector and Apron Feeder No.2 Dust Collector Exhaust Fan		

1	**DESIGN DATA**	
2	**LOCATION, SITE AND OPERATING CONDITIONS**	
3	☑ Indoor ☐ Outdoor ☐ Heated ☑ Unheated	Site Elevation: 350 m (1150ft) Above Sea Level
4	Certification: CSA or ULC	Electrical Classification: None
5	☑ Winterization Required ☐ Tropicalization Required	Seismicity: See Site Design Conditions Design Criteria
6	Environment: ☐ Toxic ☑ Dusty ☐ Corrosive ☐ Flammable	Operation: ☑ Continuous ☐ Intermittent
7	Operating schedule: (hr/day) 24 Days/Year 336	No. Starts per Hour: N/A No. Starts per Day: N/A
8		
9	**PROCESS OPERATING PARAMETERS**	
10	Description: Gold Mine Ore Crushing	Max. Noise Level (dBa) at 1.0 m, 85 dBa
11	Ore Moisture Content: 3%	
12	Ore Material Specific Gravity: 2.85 t/m³	
13	Volume Flow Rate L/s (ACFM) 1,440 (3,050)	Dust Distribution: 50% in 2-7 microns particle range
14	Min. Design Temp. (Ambient Condition) ºC (ºF) -33 (-27.4)	Inlet Dust Load g/m³ (grains/dry ft³): 12 g/m³ (5.25 grains/ft³)
15	Max. Design Temp. (Ambient Condition) ºC (ºF) 29 (84.2)	Outlet Dust Load g/m³ (grains/dry ft³): 16 mg/m³ (0.007 grains/ft³)
16	**INFORMATION REQUIRED WITH BIDS**	

			SPECIFIED BY AMEC	AS SUPPLIED BY VENDOR
17				
18	**General**			
19	Manufacturer		By Vendor	Donaldson / Torit
20	Make / Model Number		By Vendor	CPV-12
21	Paint / Finish		By Vendor	vendor standard 2,000 hour finish
22	**Housing Section**		By Vendor	
23	Housing Material		By Vendor	Carbon Steel
24	Housing Material Thickness		By Vendor	12 gauge
25	Access Doors		By Vendor	Top Acees doors
26	Lifting Lugs		By Vendor	Yes
27	Filter / Fan Access Platform		By Vendor	fan mounts directly to side, bin vent configuration
28	**Hopper Section**			
29	Hopper Material		CS	N/A- bin vent
30	Hopper Material Thickness		10 Ga	N/A- bin vent
31	Hopper Slope		60º	N/A- bin vent
32	Hopper Access Doors		Required	N/A- bin vent
33	Mounting Legs		Required	N/A- bin vent
34	Hopper Dimensions L x W x H		By Vendor	N/A- bin vent
35	**Fan**			
36	Flow Rate	L/s (ACFM)	1,440 (3,050)	5185 M3/m (3050 ACFM)
37	External Static Pressure (ESP)	Pa (in.wg.)	750 (3.0)	249 (1)
38	Total Static Pressure (TSP)	Pa (in.wg.)	By Vendor	1497 (6")
39	Manufacturer		By Vendor	New York Blower
40	Make / Model Number		By Vendor	GI size 224
41	Type / Arrangement		By Vendor	4V
42	Material		By Vendor	Carbon Steel
43	Class		By Vendor	4
44	Fan Wheel Diameter / Type of Blades		By Vendor	Radial
45	Drive Type		V-Belt / Direct Drive	Direct Drive
46	Fan BHP at Operating Point		By Vendor	3.53 KW
47	Fan Efficiency	%	By Vendor	56.4%
48	Outlet Velocity	m/s (ft/s)	By Vendor	4034 FPM
49	Fan Speed	m/s (ft/s)	By Vendor	1750 RPM
50	Equipment Noise Level	dBa	85 dBa @1.0 m (3ft)	less than 85 dBA w/ silencer
51	Fan Siilencer if required		By Vendor	Yes
52	Bearings L10 Rating, > 100,000 hr		Required	N/A- direct drive
53	Guards		OSHA	N/A- direct drive
54	Extended SS Lube Lines		Required	N/A- direct drive
55	**Fan Motor**			
56	Electrical Service		575/3/60	575/3/60
57	Manufacturer		By Vendor	TECO
58	Motor Type		Premium Efficiency IEEE 841	Yes
59	Fan Motor Size and Speed, kW (HP), RPM		By Vendor	5.5 KW (7.5 HP) 1755 RPM
60	Completed Motor Nameplate Data		Required	OK
61	Fan and Motor Weight	kg (lbs)	By Vendor	204 Kgs (450 lbs)
62	**Filter Section**			
63	Number of Bags / Cartridges	Qty.	By Vendor	12
64	Total Filter Area	m² (ft²)	By Vendor	245M (804)
65	Air to Cloth Ratio		By Vendor	3.79
66	Filter Media Type		By Vendor	PowerCore Spunbond

Data Sheet

newgold Rainy River Resources Ltd.

amec

Title	**DUST COLLECTION BAGHOUSE**		Proj Doc No.	100126-3140-DE40-DAT-0502	
Proj Name	Rainy River Gold Project		AMEC Doc. No.	N/A	
Client	Newgold Rainy River Resources Ltd.		Proj No.	100126	Rev: C
Supplier		AWBS No.	Plant/Area No 3140.	Pkg No.	
Tag No(s).	3140-BH-0011 & 3140-FA-0105			Qty:	1
Item Desc	Apron Feeder No.2 Dust Collector and Apron Feeder No.2 Dust Collector Exhaust Fan				

67	Overall Efficiency	99.9% @ 1 micron	Yes	
68	Filter Pressure Drop Pa (in.wg.)	By Vendor	4-5" wg	
69	Housing Material and Thicness	By Vendor	12 guage	
70	Auto Cleaning Mechanism Assembly	Pulse-Jet	Pulse Jet	
71				
72	**Compressed Air**			
73	Compressed Air Pressure kPa (PSIG)	By Vendor	90-100	
74	Compressed Air Consumption Sm³/hr (SCFM)	By Vendor	34 Sm3/hr (20 SCFM)	
75	**Air Lock Section**			
76	Manufacturer	By Vendor	N/A- bin vent	
77	Size	By Vendor	N/A- bin vent	
78	Model Number	By Vendor	N/A- bin vent	
79	Motor and Drive	By Vendor	N/A- bin vent	
80	Motor Size, kW (HP), RPM, V/Ph/Hz	By Vendor	N/A- bin vent	
81	Motor Type	Premium Efficiency IEEE 841	N/A- bin vent	
82				
83	**Electrical and Controls**			
84	Power Supply	575/3/60	yes	
85	Control Voltage	120 Volt	yes	
86	Main Starters and Disconnects	By Owner		
87	Control Panel	NEMA 4	yes	
88	Control Circuit Transformer	By Vendor	yes	
89	Control Circuit Fuses	By Vendor	yes	
90	Control Relays	By Vendor	yes	
91	Pressure Sensors	By Vendor	yes	
92	LED Lights	By Vendor	yes	
93	Timers	By Vendor	yes	
94	Dry Contact (Unit Status suitable for Plant PCS Connection)	By Vendor	yes	
95	Dry Contact (Common Alarm suitable for Plant PCS Connection)	By Vendor	yes	
96	One Dry Contact (Connection to Fire Alarm and Unit Shutdown)	By Vendor	yes	
97	**Shipping Data**			
98	Ovrall Dimensions (L x W x H) m (Ft)	By Vendor	3261.5x3236.5x11160.7 (128.47x128.22x86.21)	
99	Overall Weight kg (lbs)	By Vendor	659Kgs (1452 lbs)	
100	Largest Section (L x W x H) m (Ft)	By Vendor	1116x741.7x998.7 (44x30x40)	
101	Largest Section Weight kg (lbs)	By Vendor	585Kgs (1290 lbs)	
102	Winterization Required	By Vendor	Outdoor storage with tarp is sufficient	
103				

Notes

1. Bidders must duly complete the "As Supplied by Vendor" column, even if spec. is met. Please indicate meeting spec by "OK".
2. Bidders not meeting specifications are strongly encouraged to bid and indicate proposed deviation from spec in "Vendor" column.
3. Equipment must comply with Engineering Specification 100126-3200-DE40-SPE-0007

Unless otherwise agreed in a written contract between AMEC and its client: (i) this AMEC document contains information, data and design that is confidential and may not be copied or disclosed; and (ii) this document may only be used by the client in the context and for the express purpose for which it has been delivered. Any other use or reliance on this document by any third party is at that party's sole risk and responsibility.

Rev	Date	Revision/Issue Description	Prepared	Checked	Approved	Client
A	11 Jul 2014	Issued for Squad Check	DT		DT	
B	25 Aug 2014	Issued for Client Approval	DT	SC	GC	
C	25 Sep 2014	issued for Tender	FZ	SD	GC	
O	19 Mar 2015	Issued for PO				

FORM

amec

TITLE:	SUPPLIER DOCUMENT FRONT SHEET	DOC. NO.:	DOC-FOR-000037 Rev. 1
PROJECT NAME:	Rainy River	PROJECT NO.:	100126

Energy Technology Products	100126-PJ090	Apron Feeder No. 3 and Fan Data Sheet
Company Name	*PO/Contract Number*	*Package/Contract Description*

Apron Feeder No. 3 Dust Collector and Exhaust Fan Equipment Data Sheet
Document Title

3	23-Apr-15	Hetty Bolt	HBolt
Total Number of Pages (Including Front Sheet)	*Submission Date*	*Submitted By - Print Name*	*Supplier Approval - Signature*

3140-BH-0012	3140-FA-0106	

Secondary SDDRL Code(s)

VDN 22	3
Supplier/Contractor Document Number	*Supplier Rev.*

100126-PJ090-D02-0004.001	003
AMEC Project Document No.	*AMEC Issue No.*

Note: This FRONT SHEET is to be used for all non-drawing documents and if the drawing does not have sufficient space for an electronic decal

Project Review:

Permission to proceed does not constitute acceptance of design, calculations, test methods or materials developed or selected by Seller and does not relieve Seller from full compliance with contractual or other obligations.

- [x] 1. REVIEWED - NO COMMENT
- [ ] 2. REVISE AND RESUBMIT - WORK MAY PROCEED SUBJECT TO INCORPORATION OF COMMENTS
- [ ] 3. REVISE AND RESUBMIT - WORK MAY NOT PROCEED
- [ ] 4. REVIEW NOT REQUIRED - FOR INFORMATION ONLY

AMEC Signature

28 APR 2015

Date

Data Sheet

newgold Rainy River Resources Ltd.

amec

Title	DUST COLLECTION BAGHOUSE	Proj Doc No.	100126-3140-DE40-DAT-0503
Proj Name	Rainy River Gold Project	AMEC Doc. No.	N/A
Client	Newgold Rainy River Resources Ltd.	Proj No.	100126 — Rev: C
Supplier	AWBS No.	Plant/Area No 3140.	Pkg No.
Tag No(s).	3140-BH-0012 & 3140-FA-0106		Qty: 1
Item Desc	Apron Feeder No.3 Dust Collector and Apron Feeder No.3 Dust Collector Exhaust Fan		

1	**DESIGN DATA**	
2	**LOCATION, SITE AND OPERATING CONDITIONS**	
3	☑ Indoor ☐ Outdoor ☐ Heated ☑ Unheated	Site Elevation: 350 m (1150ft) Above Sea Level
4	Certification: CSA or ULC	Electrical Classification: None
5	☑ Winterization Required ☐ Tropicalization Required	Seismicity: See Site Design Conditions Design Criteria
6	Environment: ☐ Toxic ☑ Dusty ☐ Corrosive ☐ Flammable	Operation: ☑ Continuous ☐ Intermittent
7	Operating schedule: (hr/day) 24 Days/Year 336	No. Starts per Hour: N/A No. Starts per Day: N/A
8		
9	**PROCESS OPERATING PARAMETERS**	
10	Description: Gold Mine Ore Crushing	Max. Noise Level (dBa) at 1.0 m, 85 dBa
11	Ore Moisture Content: 3%	
12	Ore Material Specific Gravity: 2.85 t/m³	
13	Volume Flow Rate L/s (ACFM) 1,440 (3,050)	Dust Distribution: 50% in 2-7 microns paricle range
14	Min. Design Temp. (Ambient Condition) ºC (ºF) -33(-27.4)	Inlet Dust Load g/m³ (grains/dry ft³): 12 g/m³ (5.25 grains/ft³)
15	Max. Design Temp. (Ambient Condition) ºC (ºF) 29 (84.2)	Outlet Dust Load g/m³ (grains/dry ft³): 16 mg/m³ (0.007 grains/ft³)
16	**INFORMATION REQUIRED WITH BIDS**	

			SPECIFIED BY AMEC	AS SUPPLIED BY VENDOR
17				
18	**General**			
19	Manufacturer		By Vendor	Donaldson / Torit
20	Make / Model Number		By Vendor	CPV-12
21	Paint / Finish		By Vendor	vendor standard 2,000 hour finish
22	**Housing Section**		By Vendor	
23	Housing Material		By Vendor	Carbon Steel
24	Housing Material Thickness		By Vendor	12 gauge
25	Access Doors		By Vendor	Top Acees doors
26	Lifting Lugs		By Vendor	Yes
27	Filter / Fan Access Platform		By Vendor	fan mounts directly to side, bin vent configuration
28	**Hopper Section**			
29	Hopper Material		CS	N/A- bin vent
30	Hopper Material Thickness		10 Ga	N/A- bin vent
31	Hopper Slope		60º	N/A- bin vent
32	Hopper Access Doors		Required	N/A- bin vent
33	Mounting Legs		Required	N/A- bin vent
34	Hopper Dimensions L x W x H		By Vendor	N/A- bin vent
35	**Fan**			
36	Flow Rate	L/s (ACFM)	1,440 (3,050)	3050 CFM (5185 M 3/m)
37	External Static Pressure (ESP)	Pa (in.wg.)	750 (3.0)	249 (1)
38	Total Static Pressure (TSP)	Pa (in.wg.)	By Vendor	1497 (6")
39	Manufacturer		By Vendor	New York Blower
40	Make / Model Number		By Vendor	GI size 224
41	Type / Arrangement		By Vendor	4V
42	Material		By Vendor	Carbon Steel
43	Class		By Vendor	4
44	Fan Wheel Diameter / Type of Blades		By Vendor	Radial
45	Drive Type		V-Belt / Direct Drive	Direct Drive
46	Fan BHP at Operating Point		By Vendor	3.53 kW
47	Fan Efficiency	%	By Vendor	56.4%
48	Outlet Velocity	m/s (ft/s)	By Vendor	4034 FPM
49	Fan Speed	m/s (ft/s)	By Vendor	1750 RPM
50	Equipment Noise Level	dBa	85 dBa @1.0 m (4ft)	less than 85 dBA w/ silencer
51	Fan Siilencer if required		By Vendor	Yes
52	Bearings L10 Rating, > 100,000 hr		Required	N/A- direct drive
53	Guards		OSHA	N/A- direct drive
54	Extended SS Lube Lines		Required	N/A- direct drive
55	**Fan Motor**			
56	Electrical Service		575/3/60	575/3/60
57	Manufacturer		By Vendor	TECO
58	Motor Type		Premium Efficiency IEEE 841	Yes
59	Fan Motor Size and Speed, kW (HP), RPM		By Vendor	5.5Kw (7.5 HP) 1755 RPM
60	Completed Motor Nameplate Data		Required	OK
61	Fan and Motor Weight	kg (lbs)	By Vendor	450 lbs (204 Kg)
62	**Filter Section**			
63	Number of Bags / Cartridges	Qty.	By Vendor	12
64	Total Filter Area	m² (ft²)	By Vendor	245m (804ft)
65	Air to Cloth Ratio		By Vendor	3.79
66	Filter Media Type		By Vendor	PowerCore Spunbond

Data Sheet

newgold Rainy River Resources Ltd.

amec

Title	DUST COLLECTION BAGHOUSE		Proj Doc No.	100126-3140-DE40-DAT-0503	
Proj Name	Rainy River Gold Project		AMEC Doc. No.	N/A	
Client	Newgold Rainy River Resources Ltd.		Proj No.	100126	Rev: C
Supplier		AWBS No.	Plant/Area No 3140.	Pkg No.	
Tag No(s).	3140-BH-0012 & 3140-FA-0106			Qty:	1
Item Desc	Apron Feeder No.3 Dust Collector and Apron Feeder No.3 Dust Collector Exhaust Fan				

67	Overall Efficiency	99.9 % @ 1 micron	Yes	
68	Filter Pressure Drop Pa (in.wg.)	By Vendor	4-5" wg	
69	Housing Material and Thicness	By Vendor	12 guage	
70	Auto Cleaning Mechanism Assembly	Pulse-Jet	Pulse Jet	
71				
72	**Compressed Air**			
73	Compressed Air Pressure kPa (PSIG)	By Vendor	90-100	
74	Compressed Air Consumption Sm³/hr (SCFM)	By Vendor	34 Sm3/hr (20 SCFM)	
75	**Air Lock Section**			
76	Manufacturer	By Vendor	N/A- bin vent	
77	Size	By Vendor	N/A- bin vent	
78	Model Number	By Vendor	N/A- bin vent	
79	Motor and Drive	By Vendor	N/A- bin vent	
80	Motor Size, kW (HP), RPM, V/Ph/Hz	By Vendor	N/A- bin vent	
81	Motor Type	Premium Efficiency IEEE 841	N/A- bin vent	
82				
83	**Electrical and Controls**			
84	Power Supply	575/3/60	yes	
85	Control Voltage	120 Volt	yes	
86	Main Starters and Disconnects	By Owner		
87	Control Panel	NEMA 4	yes	
88	Control Circuit Transformer	By Vendor	yes	
89	Control Circuit Fuses	By Vendor	yes	
90	Control Relays	By Vendor	yes	
91	Pressure Sensors	By Vendor	yes	
92	LED Lights	By Vendor	yes	
93	Timers	By Vendor	yes	
94	Dry Contact (Unit Status suitable for Plant PCS Connection)	By Vendor	yes	
95	Dry Contact (Common Alarm suitable for Plant PCS Connection)	By Vendor	yes	
96	One Dry Contact (Connection to Fire Alarm and Unit Shutdown)	By Vendor	yes	
97	**Shipping Data**			
98	Ovrall Dimensions (L x W x H) m (Ft)	By Vendor	3261.5x3236.5x11160.7 (128.47x128.22x86.21)	
99	Overall Weight kg (lbs)	By Vendor	659Kgs (1452 lbs)	
100	Largest Section (L x W x H) m (Ft)	By Vendor	1116x741.7x998.7 (44x30x40)	
101	Largest Section Weight kg (lbs)	By Vendor	585Kgs (1290 lbs)	
102	Winterization Required	By Vendor	Outdoor storage with tarp is sufficient	
103				

Notes

1	Bidders must duly complete the "As Supplied by Vendor" column, even if spec. is met. Please indicate meeting spec by "OK".
2	Bidders not meeting specifications are strongly encouraged to bid and indicate proposed deviation from spec in "Vendor" column.
3	Equipment must comply with Engineering Specification 100126-3200-DE40-SPE-0007

Unless otherwise agreed in a written contract between AMEC and its client: (i) this AMEC document contains information, data and design that is confidential and may not be copied or disclosed; and (ii) this document may only be used by the client in the context and for the express purpose for which it has been delivered. Any other use or reliance on this document by any third party is at that party's sole risk and responsibility.

Rev	Date	Revision/Issue Description	Prepared	Checked	Approved	Client
A	11 Jul 2014	Issued for Squad Check	DT		DT	
B	25 Aug 2014	Issued for Client Approval	DT	SC	GC	
C	25 Sep 2014	issued for Tender	FZ	SD	GC	
O	19 Mar 2015	issued for PO				

FORM

amec

TITLE:	SUPPLIER DOCUMENT FRONT SHEET	DOC. NO.:	DOC-FOR-000037 Rev. 1
PROJECT NAME:	Rainy River	PROJECT NO.:	100126

Energy Technology Products	100126-PJ090	Wet Scrubber DC and Fan Data Sheet
Company Name	*PO/Contract Number*	*Package/Contract Description*

Wet Scrubber Dust Collector and Exhaust Fan Equipment Data Sheet
Document Title

3	23-Apr-15	Hetty Bolt	HBolt
Total Number of Pages (Including Front Sheet)	*Submission Date*	*Submitted By - Print Name*	*Supplier Approval - Signature*

3220-BH-0020	3220-FA-0021	

Secondary SDDRL Code(s)

VDN 23	4
Supplier/Contractor Document Number	*Supplier Rev.*

100126-PJ090-D02-0005.001	004
AMEC Project Document No.	*AMEC Issue No.*

Note: This FRONT SHEET is to be used for all non-drawing documents and if the drawing does not have sufficient space for an electronic decal.

Project Review:

Permission to proceed does not constitute acceptance of design, calculations, test methods or materials developed or selected by Seller and does not relieve Seller from full compliance with contractual or other obligations.

- [x] 1. REVIEWED - NO COMMENT
- [ ] 2. REVISE AND RESUBMIT - WORK MAY PROCEED SUBJECT TO INCORPORATION OF COMMENTS
- [ ] 3. REVISE AND RESUBMIT - WORK MAY NOT PROCEED
- [ ] 4. REVIEW NOT REQUIRED - FOR INFORMATION ONLY

AMEC Signature — *Date* 28 Apr 2015

Data Sheet

newgold Rainy River Resources Ltd.

amec

Title	**WET SCRUBBER**		Proj Doc No.	100126-3220-DE40-DAT-0600	
Proj Name	Rainy River Gold Project		AMEC Doc. No.	N/A	
Client	Newgold Rainy River Resources Ltd.		Proj No.	100126	Rev: C
Supplier		AWBS No.	Plant/Area No 3140.	Pkg No.	
Tag No(s).	3220-BH-0020 & 3220-FA-0021			Qty:	1
Item Desc	Pebble Crusher Wet Scrubber and Pebble Crusher Wet Scrubber Exhaust Fan				

1	**DESIGN DATA**				
2	**LOCATION, SITE AND OPERATING CONDITIONS**				
3	☑ Indoor ☐ Outdoor ☑ Heated ☐ Unheated			Site Elevation: 350 m (1150ft) Above Sea Level	
4	Certification: CSA or ULC			Electrical Classification: None	
5	☐ Winterization Required ☐ Tropicalization Required			Seismicity: See Site Design Conditions Design Criteria	
6	Environment: ☐ Toxic ☑ Dusty ☐ Corrosive ☐ Flammable			Operation: ☑ Continuous ☐ Intermittent	
7	Operating schedule: (hr/day) 24 Days/Year		336	No. Starts per Hour: N/A	No. Starts per Day: N/A
8					
9	**PROCESS OPERATING PARAMETERS**				
10	Description: Gold Mine Ore Crushing			Max. Noise Level (dBa) at 1.0 m, 85 dBa	
11	Ore Moisture Content: 3%				
12	Ore Material Specific Gravity: 2.85 t/m³				
13	Volume Flow Rate	L/s (ACFM)	6,186 (13,100)	Dust Distribution: 50% in 2-7 microns particle range	
14	Min. Design Temp. (Ambient Condition) ºC (ºF)		10 (50)	Inlet Dust Load g/m³ (grains/dry ft³): 12 g/m³ (5.25 grains/ft³)	
15	Max. Design Temp. (Ambient Condition) ºC (ºF)		35 (95)	Outlet Dust Load g/m³ (grains/dry ft³): 16 mg/m³ (0.007 grains/ft³)	
16	**INFORMATION REQUIRED WITH BIDS**				
17			**SPECIFIED BY AMEC**	**AS SUPPLIED BY VENDOR**	
18	**Service**		Pebble Crusher		
19	**Wet Scrubber**				
20	Type		Dynamic Scrubber	Adjustable Venturi	
21	Manufacturer		By Vendor	Fisher-Klosterman	
22	Make / Model Number		By Vendor	MS-500M	
23	Overall Efficiency	%	99.9% @ a micron; Approx. 16 mg/cum(0.007 grains/cu ft)	See Proposal for fractional efficiency	
24	**Scrubber Data**				
25	Airflow Rate	L/s (ACFM)	6,186 (13,100)	OK	
26	Spray Liquid Media		Process Water	OK	
27	Spray Liquid Flow Rate	m³/h (gpm)	By Vendor	78 GPM	
28	Spray Liquid Pressure Required	kPa (psig)	By Vendor	40-60 PSIG	
29	Liquid Pressure Drop	kPa (ft)	By Vendor	TBD	
30	Re-circulating Liquid Permitted	%	By Vendor	2	
31	Liquid Make-up Rate	m³/h (gpm)	By Vendor	0.6 GPM EVAPORATION	
32	**Scrubber Construction**				
33	Paint / Finish		By Vendor	One coat Rust-Oleum Epoxy Mastic 9182	
34	Casing Material and Thickness		Carbon Steel, Min. 3.42mm (10Ga)	OK	
35	Scrubbing Vane Type / Material		By Vendor	HRS	
36	Demist Section		By Vendor	HRS	
37	Demist Efficiency	%	By Vendor	NA	
38	Flanges		ANSI	WATER FLANGES, GAS FLANGES PLATE	
39	Spray Liquid Nozzel Type / Material		By Vendor / 316L SS	BETE 120 DEGREE NOZZLES	
40	Spray Manifold Type / Material		By Vendor / 316L SS	SCH 40 CS, EXTERIOR TO UNIT	
41	Inlet / Outlet Piping Material		316L SS	SCH 40 CS	
42	Air Inlet Dimensions	mm (ins.)	By Vendor	30 IN. X 12-1/2 IN.	
43	Slurry Inlet / Outlet Dimensions	mm (ins.)	By Vendor	TBD	
44	Est.d Slurry Suspended Solid Particles	%	By Vendor	NA	
45	Slurry Overflow Dimension	mm (ins.)	By Vendor	TBD	
46	Liquid Inlet Dimension	mm (ins.)	By Vendor	TBD	
	Support (Bracket only welded to unit)		By Vendor	OK	
50	**Fan Section**				
51	Air Flow Rate	L/s (ACFM)	6,186 (13,100)	22270 M3/m (13,100 ACFM)	
52	External Static Pressure (ESP)	Pa (inch. W.G.)	1250 (5.0)	INCLUDED 6"DP FOR SCRUBBER	
53	Total Static Pressure (TSP)	Pa (inch. W.G.)	By Vendor	11"WG	
54	Manufacturer		By Vendor	NEW YORK BLOWER	
55	Make / Model Number		By Vendor	RTS SIZE 308	
56	Integral Wetted Fan		By Vendor	NO	
57	Type / Arrangement		By Vendor	ARRANGEMENT 1	
58	Material		By Vendor	HRS	
59	Class		By Vendor	TO FOLLOW	
60	Fan Wheel Diameter / Type of Blades		By Vendor	30"	
61	Drive Type		V-Belt	V-BELT	
62	Fan BHP at Operating Point		By Vendor	33.6	
63	Fan Efficiency	%	By Vendor	72.69%	
64	Outlet Velocity	m/s (ft/s)	By Vendor	3900 FPM	
65	Fan Speed	m/s (ft/s)	By Vendor	1835 RPM	
66	Equipment Noise Level	dBa	85 dBa @1.0 m (3ft)	less than 85 dBA w/ silencer	
67	Fan Siilencer if required		By Vendor	yes	

Data Sheet

newgold Rainy River Resources Ltd.

amec

Title	**WET SCRUBBER**	Proj Doc No.	100126-3220-DE40-DAT-0600
Proj Name	Rainy River Gold Project	AMEC Doc. No.	N/A
Client	Newgold Rainy River Resources Ltd.	Proj No.	100126 — Rev: C
Supplier	AWBS No.	Plant/Area No 3140.	Pkg No.
Tag No(s).	3220-BH-0020 & 3220-FA-0021		Qty: 1
Item Desc	Pebble Crusher Wet Scrubber and Pebble Crusher Wet Scrubber Exhaust Fan		

68	Bearings L10 Rating, > 100,000 hr	Required	yes	
69	Bearing Manufacturer / Type Size	By Vendor	2-7/16" P-LB6839	
70	Guards	OSHA	YES	
71	Extended SS Lube Lines	Required	YES	
72	**Fan Motor**			
73	Electrical Power Supply V/Ph/Hz	575/3/60	OK	
74	Manufacturer	By Vendor	TECO	
75	Motor Type	Premium Efficiency IEEE 841	YES	
76	Fan Motor Size and Speed, kW (HP), RPM	By Vendor	30 KW (40 HP) 1800 RPM	
77	Completed Motor Nameplate Data	Required	OK	
78	Fan and Motor Weight kg (lbs)	By Vendor	1134 Kgs (2500 lbs)	
79	**Electrical and Controls**			
80	Power Supply	575/3/60	Yes, included	
81	Control Voltage	120 Volt	Yes, included	
82	Main Starters and Disconnects	By Owner	OK	
83	Control Panel, NEMA 4	NEMA 4	Yes, included	
84	Control Circuit Transformer	By Vendor	Yes, included	
85	Control Circuit Fuses	By Vendor	Yes, included	
86	Control Relays	By Vendor	Yes, included	
87	Pressure Sensors	By Vendor	Yes, included	
88	LED Lights	By Vendor	Yes, included	
89	Timers	By Vendor	Yes, included	
90	Dry Contact (Unit Status suitable for Plant PCS Connection)	By Vendor	Yes, included	
91	Dry Contact (Common Alarm suitable for Plant PCS Connection)	By Vendor	Yes, included	
92	One Dry Contact (Connection to Fire Alarm and Unit Shutdown)	By Vendor	Yes, included	
93	**Shipping Data**			
94	Ovrall Dimensions Including Fan (L x W x H) m (ft)	By Vendor	409x376x561x(161x148x221)	
95	Overall Weight Dry / Flooded Including Fan kg (lbs)	By Vendor	2973 Kgs (6554 lbs)	
96	Largest Section (L x W x H) m (ft)	By Vendor	244x244x417 (96x96x164)	
97	Largest Section Weight kg (lbs)	By Vendor	1835 Kgs (833 lbs)	

Notes

1. Bidders must duly complete the "As Supplied by Vendor" column, even if spec. is met. Please indicate meeting spec by "OK".
2. Bidders not meeting specifications are strongly encouraged to bid and indicate proposed deviation from spec in "Vendor" column.
3. Equipment must comply with Engineering Specification 100126-3200-DE40-SPE-0007

Unless otherwise agreed in a written contract between AMEC and its client: (i) this AMEC document contains information, data and design that is confidential and may not be copied or disclosed; and (ii) this document may only be used by the client in the context and for the express purpose for which it has been delivered. Any other use or reliance on this document by any third party is at that party's sole risk and responsibility.

Rev	Date	Revision/Issue Description	Prepared	Checked	Approved	Client
A	11 Jul 2014	Issued for Squad Check	DT		DT	
B	25 Aug 2014	Issued for Client Approval	DT	SC	GC	
C	25 Sep 2014	Issued for Tender	FZ	SD	GC	
O	02 Mar 2015	Issued for PO				

FORM

TITLE:	SUPPLIER DOCUMENT FRONT SHEET	DOC. NO.:	DOC-FOR-000037 Rev. 1
PROJECT NAME:		PROJECT NO.:	

Hayward Gordon	100126-PJ270	Reagent Systems
Company Name	*PO/Contract Number*	*Package/Contract Description*

Fan Data Sheets
Document Title

2	04-Mar-16	Annelly Portillo	AP
Total Number of Pages (Including Front Sheet)	*Submission Date*	*Submitted By - Print Name*	*Supplier Approval - Signature*

Equipment Tag Number(s)

3270-FA-0040		

Secondary SDDRL Code(s)

	02
Supplier/Contractor Document Number	*Supplier Rev.*

100126-PJ270-D02-0001 .001	03
AMEC Project Document No.	*AMEC Issue No.*

Note: This FRONT SHEET is to be used for all non-drawing documents and if the drawing does not have sufficient space for an electronic decal.

SUPPLIER REVIEW

1 **REVIEWED AND ACCEPTED WITH NO COMMENT.**

PERMISSION TO PROCEED DOES NOT CONSTITUTE ACCEPTANCE OF DESIGN, CALCULATIONS, TEST METHODS OR MATERIAL DEVELOPED OR SELECTED BY SELLER AND DOES NOT RELIEVE SELLER FROM FULL COMPLIANCE WITH CONTRACTUAL OR OTHER OBLIGATIONS.

Fischer, Zach
01:35 PM, 12/03/2016

r materials developed or selected by
other obligations.

RPORATION OF COMMENTS

Data Sheet

Title	**Reagent Systems**			**Proj Doc No.**	**100126-PJ270-D02-0001**		
Proj Name	Rainy River Gold Project			**AMEC Doc. No.**	**100126-PJ270-D02-0001**		
Client	New Gold			**Proj No.**	100126		
Supplier		**AWBS No.**		**Plant/Area No.**	3200	**Pkg No.**	PJ270

	Item		**1**		
	Equipment Number		**3270-FA-0040**		
	Equipment Description		**Cyanide Tanks Exhaust Venturi Blower**		
1	**AMEC DATA**	Unit			Rev
2	**General**				
3	Location:	Indoor / Outdoor	Indoor		
4	Environment:	Toxic	n/a		
5		Corrosive	-		
6		Flammable			
7		Dusty			
8					
9	Quantity				
10	Contents		1.26		
11	Specific gravity of solids	SG	2.7		
12	Temperature	°C	5 - 35		
13	pH		11		
14	Material				
15	Height				
16	Design Code				
17	**VENDOR TO COMPLETE**				
18	Fan Manufacturer		Twin City Fan & Blower		
19	Model Number		BCV-135		3
20	Flow Rate	L/s (CFM)	472 L/S (1000 CFM)		3
21	Outlet Velocity	m/s	4.84 (952)		3
22	Material of Construction		316 Stainless Steel Impeller and Mild Steel Housing / Bearing Pedestal (painted)		3
23	Class		1		3
24	Fan Wheel Diameter / Type of blades		13.5" / Backward Curved, Flat		3
25	Fan Speed	m/s	1193		3
26	Equipment Noise Level	dBa	68 dBA at 5 Feet		3
27	Ventilation Air Flow Pressure		0.80"		3
28	Bearings		Pillow Block, Grease Lubricated, L-50 200,000 hrs		3
29	Guards		Weather Cover (covers drives and shaft / bearings)		3
30	Motor Power	BkW (BHP)	0.14 (0.19)		3
31	Motor Manufacturer		TECO Westinghouse		3
32	Motor Size and Speed	HP	1/3		3
33	**Ducting:**				
34	Material				
35	Plate Thickness				
36	Design Code				
37					
38	**Weight Summary:**				
39	Blower		176		3
40					

Notes

1.- Discharge Oultet positioning - CW Rotation, THD Discharge

FORM

TITLE:	SUPPLIER DOCUMENT FRONT SHEET	DOC. NO.:	D01-0005-001 Rev 0
PROJECT NAME:	Rainy River Project	PROJECT NO.:	

National Process	100126-PJ040	Fire Pump Package
Company Name	*PO/Contract Number*	*Package/Contract Description*

Catalogue Data/ Cut Sheet (Diesel Engine)
Document Title

14	6-Nov-15	Nabil Francis	Nabil Francis
Total Number of Pages (Including Front Sheet)	*Submission Date*	*Submitted By - Print Name*	*Supplier Approval - Signature*

Equipment Tag Number(s) 2530-PU-1002-MO

Secondary SDDRL Code(s)

7107233D11-5	00	100126-PJ040-D01-0005.001	1
Supplier/Contractor Document Number	*Supplier Rev.*	*AMEC Project Document No.*	*AMEC Issue No.*

Note: This FRONT SHEET is to be used for all non-drawing documents and if the drawing does not have sufficient space for an electronic decal.

SUPPLIER REVIEW

1 **REVIEWED AND ACCEPTED WITH NO COMMENT.**

PERMISSION TO PROCEED DOES NOT CONSTITUTE ACCEPTANCE OF DESIGN, CALCULATIONS, TEST METHODS OR MATERIAL DEVELOPED OR SELECTED BY SELLER AND DOES NOT RELIEVE SELLER FROM FULL COMPLIANCE WITH CONTRACTUAL OR OTHER OBLIGATIONS.

Fischer, Zach
01:59 PM, 18/11/2015

veloped or selected by
ons.

OF COMMENTS

CLARKE®

FIRE PUMP ENGINES

MODELS

JU6H-UFADMG	JU6H-UFADP0	JU6H-UFADR0	JU6H-UFADT0
JU6H-UFAD58	JU6H-UFADP8	JU6H-UFADR8	JU6H-UFADW8
JU6H-UFADNG	JU6H-UFADQ0	JU6H-UFADS8	JU6H-UFADX8
JU6H-UFADN0	JU6H-UFAD88	JU6H-UFADS0	JU6H-UFAD98

2530-PU-1002-MO

FM-UL-cUL APPROVED RATINGS BHP/*KW*

JU6H MODEL ♦	RATED SPEED 1760		2100		2350		2400		US-EPA (NSPS) Available Until ●
UFADMG			175	*131*	175	*131*			*No Expiration*
UFAD58	183	*137*							*No Expiration*
UFADNG	190	*142*	181	*135*	183	*137*	183	*137*	*No Expiration*
UFADN0	197	*147*	197	*147*	200	*149*	200	*149*	*No Expiration*
UFADP0			209	*156*	211	*157*	211	*157*	*No Expiration*
UFADP8	220	*164*							*No Expiration*
UFADQ0			224	*167*	226	*169*	226	*169*	*No Expiration*
UFAD88	237	*177*							*No Expiration*
UFADR0			238	*177.5*	240	*179*	240	*179*	*No Expiration*
UFADR8	250	*187*							*No Expiration*
UFADS8	260	*194*							*No Expiration*
UFADS0			260	*194*	268	*200*	268	*200*	*No Expiration*
UFADT0			274	*204*	275	*205*	275	*205*	*No Expiration*
UFADW8	282	*211*							*No Expiration*
UFADX8	305	*227.5*							*No Expiration*
UFAD98	315	*235*							*No Expiration*

Picture represents JU6H-TRWA Power Tech Plus Engine Series

● USA EPA (NSPS) Tier 3 Emissions Certified Off-Road (40 CFR Part 89) and NSPS Stationary (40 CFR Part 60 Sub Part IIII). Meet EU Stage IIIA emission levels.

♦ All Models available for Export

SPECIFICATIONS

ITEM	JU6H MODELS MG	58	NG	N0	P8	88	P0	Q0	R0	S0	T0	R8	S8	W8	X8	98
Number of Cylinders	6															
Aspiration	TRWA															
Rotation*	CW															
Overall Dimensions – in. (mm)	45.8 (1163) H x 56.7 (1414) L x 36.7 (933) W						46.9 (1191) H x 58.6 (1488) L x 40.0 (1015) W									
Crankshaft Centerline Height – in. (mm)	14 (356)															
Weight – lb (kg)	1747 (791)															
Compression Ratio	19.0:1						17.0:1									
Displacement – cu. in. (L)	415 (6.8)															
Engine Type	4 Stroke Cycle – Inline Construction															
Bore & Stroke – in. (mm)	4.19 x 5.00 (106 x 127)															
Installation Drawing	D628															
Wiring Diagram AC	C07651															
Wiring Diagram DC	C071367, C072146, C071361						C071368, C072146, C071761									
Engine Series	John Deere 6068 Series Power Tech E						John Deere 6068 Series Power Tech Plus									
Speed Interpolation	N/A															

Abbreviations: CW – Clockwise TRWA – Turbocharged with Raw Water Aftercooling N/A - Not Available L – Length W – Width H - Height

*Rotation viewed from Heat Exchanger / Front of engine

CERTIFIED POWER RATING

- Each engine is factory tested to verify power and performance.
- FM-UL power ratings are shown at specific speeds, Clarke engines can be applied at a single rated RPM setting ± 50 RPM.

ENGINE RATINGS BASELINES

- Engines are to be used for stationary emergency standby fire pump service only. Engines are to be tested in accordance with NFPA 25.
- Engines are rated at standard SAE conditions of 29.61 in. (752.1 mm) Hg barometer and 77°F (25°C) inlet air temperature [approximates 300 ft. (91.4 m) above sea level] by the testing laboratory (see SAE Standard J 1349).
- A deduction of 3 percent from engine horsepower rating at standard SAE conditions shall be made for diesel engines for each 1000 ft. (305 m) altitude above 300 ft. (91.4 m)
- A deduction of 1 percent from engine horsepower rating as corrected to standard SAE conditions shall be made for diesel engines for every 10°F (5.6°C) above 77°F (25°C) ambient temperature.

CLARKE®

FIRE PUMP ENGINES

MODELS

JU6H-UFADMG	JU6H-UFADP0	JU6H-UFADR0	JU6H-UFADT0
JU6H-UFAD58	JU6H-UFADP8	JU6H-UFADR8	JU6H-UFADW8
JU6H-UFADNG	JU6H-UFADQ0	JU6H-UFADS8	JU6H-UFADX8
JU6H-UFADN0	JU6H-UFAD88	JU6H-UFADS0	JU6H-UFAD98

ENGINE EQUIPMENT

EQUIPMENT	STANDARD	OPTIONAL
Air Cleaner	Direct Mounted, Washable, Indoor Service with Drip Shield	Disposable, Drip Proof, Indoor Service Outdoor Type, Single or Two Stage (Cyclonic)
Alarms	Overspeed Alarm & Shutdown, Low Oil Pressure, Low & High Coolant Temperature, Low Raw Water Flow, High Raw Water Temperature, Alternate ECM Warning, Fuel Injection Malfunction, ECM Warning and Failure with Automatic Switching	Low Coolant Level, Low Oil Level, Oil Filter Differential Pressure, Fuel Filter Differential Pressure, Air Filter Restriction
Alternator	12V-DC, 42 Amps with Poly-Vee Belt and Guard	24V-DC, 40 Amps with Poly-Vee Belt and Guard
Coupling	Bare Flywheel	UL Listed Driveshaft and Guard, JU6H-UFAD58/NG/ADMG/ADM8/K0/N0/Q0/R0-CDS30-S1; JU6H-UFADP8/P0/T0/88/R8/S8/S0/W8/X8/98 - CDS50-SC at 1760/2100 RPM only
Electronic Control Module	12V-DC, Energized to Stop, Primary ECM always Powered on	24V-DC, Energized to Stop, Primary ECM always Powered on
Engine Heater	115V-AC, 1360 Watt	230V-AC, 1360 Watt
Exhaust Flex Connection	SS Flex, 150# ANSI Flanged Connection, 5" for JU6H-UFAD58/MG/NG/N0/P8/88; SS Flex, 150# ANSI Flanged Connection, 6" for JU6H-UFADP0/Q0/R0/S0/T0/R8/S8/W8/X8/98 (w/ orifice plate)	SS Flex, 150# ANSI Flanged Connection, 6" for JU6H-UFAD58/MG/NG/N0/P8/88; SS Flex, 150# ANSI Flanged Connection, 8" for JU6H-UFADP0/Q0/R0/S0/T0/R8/S8/W8/X8/98 (w/ orifice plate)
Exhaust Protection	Metal Guards on Manifolds and Turbocharger	
Flywheel Housing	SAE #3	
Flywheel Power Take Off	11.5" SAE Industrial Flywheel Connection	
Fuel Connections	Fire Resistant, Flexible, USA Coast Guard Approved, Supply and Return Lines	SS, Braided, cUL Listed, Supply and Return Lines
Fuel Filter	Primary Filter with Priming Pump	
Fuel Injection System	High Pressure Common Rail	
Governor, Speed	Dual Electronic Control Modules	
Heat Exchanger	Tube and Shell Type, 60 PSI (4 BAR), NPT(F) Connections – Sea Water Compatible	
Instrument Panel	Multimeter to Display English and Metric, Tachometer, Hourmeter, Water Temperature, Oil Pressure and One (1) Voltmeter with Toggle Switch, Front Opening	
Junction Box	Integral with Instrument Panel; For DC Wiring Interconnection to Engine Controller	
Lube Oil Cooler	Engine Water Cooled, Plate Type	
Lube Oil Filter	Full Flow with By-Pass Valve	
Lube Oil Pump	Gear Driven, Gear Type	
Manual Start Control	On Instrument Panel with Control Position Warning Light	
Overspeed Control	Electronic, Factory Set, Not Field Adjustable	
Raw Water Cooling Loop w/Alarms	Galvanized	Seawater, All 316SS, High Pressure
Raw Water Cooling Loop Solenoid Operation	Automatic from Fire Pump Controller and from Engine Instrument Panel (for Horizontal Fire Pump Applications)	Not Supplied (for Vertical Turbine Fire Pump Applications)
Run – Stop Control	On Instrument Panel with Control Position Warning Light	
Starters	Two (2) 12V-DC	Two (2) 24V-DC
Throttle Control	Adjustable Speed Control by Increase/Decrease Button, Tamper Proof in Instrument Panel	
Water Pump	Centrifugal Type, Poly-Vee Belt Drive with Guard	

Abbreviations: DC – Direct Current, AC – Alternating Current, SAE – Society of Automotive Engineers, NPT(F) – National Pipe Tapered Thread (Female), ANSI – American National Standards Institute, SS – Stainless Steel

MODEL NOMENCLATURE: (10 Digit Models)

JU6H - UFADR0

- John Deere Base Engine
- 350 Series
- 6 Cylinders
- Heat Exchanger Cooled
- UL Listed
- FM Approved
- Built in USA
- EPA Tier 3 Certified
- Power Curve Number

CLARKE®

CLARKE Fire Protection Products, Inc.
100 Progress Place, Cincinnati, Ohio 45246
United States of America
Tel +1-513-475-FIRE(3473) Fax +1-513-771-8930
www.clarkefire.com

CLARKE UK, Ltd.
Grange Works, Lomond Rd., Coatbridge, ML5-2NN
United Kingdom
Tel +44-1236-429946 Fax +44-1236-427274
www.clarkefire.com

C133421 revQ
13APR15

Specifications and information contained in this brochure subject to change without notice.

AURORA® 481 PUMPS

SINGLE-STAGE FIRE PUMPS
CLARKE DIESEL ENGINE DRIVE
JU6H-UFAD-K0, M8, MG, 58, NG, N0, P8, P0, Q0, R0, S0, T0, 88, R8, S8, W8, X8, 98
EPA NSPS TIER 3 CERTIFIED

⚠ WARNING

DO NOT OPERATE THIS MACHINE WITHOUT PROTECTIVE GUARD IN PLACE. ANY OPERATION OF THIS MACHINE WITHOUT PROTECTIVE GUARD CAN RESULT IN SEVERE BODILY INJURY.

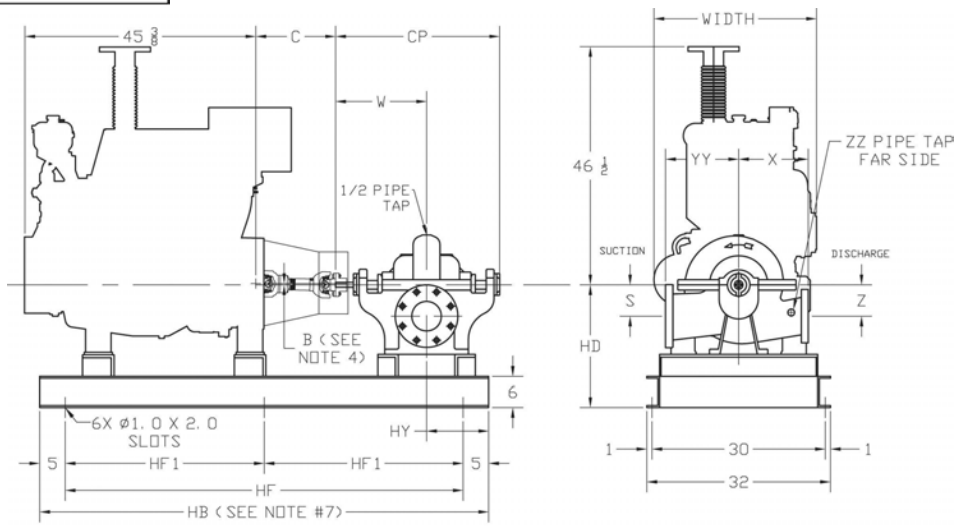

ENGINE MODEL: JU6H-UFAD__	C	UL LISTED DRIVESHAFT*	B DRIVESHAFT OFFSET DIMENSION
K0*, M8, MG, 58, NG, N0, Q0, R0	15 -5/8	CDS30-S1	0.35
P8,P0,S0,T0,88,R8,S8,W8,X8,98	20 -3/8	CDS50-SC (1760 & 2100 RPM)	0.45
*For engines with speeds of 1760 & 2100 RPM only. For 2350 RPM use a non-listed driveshaft.			

ENGINE MODEL: JU6H-UFAD__	C	NON-LISTED DRIVESHAFT**	B DRIVESHAFT OFFSET DIMENSION
T0, S0, P0, R0	20 -3/8	SC81A (2350 RPM)	0.45
**For engines with speeds of 2350 RPM only. There is no listed driveshaft available in this HP range.			

PUMP SIZE			SUCTION	POWER SERIES	S	W	X	Z	CP	YY	ZZ	HB	HD	HF	HF1	HY
DISCH	MODEL	CASE BORE														
5	481	17	6	4	6-1/4	16	14	5-1/4	28-1/2	15	1-1/4	88	20	78	39	14
6	481	11HH	8	4A	8-5/8	18-1/8	10	8-5/8	32-7/8	15	1-1/4	88	23	78	39	11-7/8
6	481	14HH	8	5A	7-1/2	20-1/2	15	7-1/2	36-3/4	17	1-1/4	98	23	88	44	19-9/16
6	481	15	8	5	6-3/4	18	14-1/4	6-3/4	32	16-3/4	1-1/4	88	21	78	39	12
6	481	18	8	5	8	18	16	8	32	18	1-1/4	88	22	78	39	12
6	481	20	8	5	8	18	15-3/4	8	32	18	1-1/4	88	22	78	39	12
8	481	17B	10	5	8	18	17	8	32	17-3/4	2	88	24	78	39	12
8	481	21	10	6B	9-1/2	21-7/8	18	9-1/2	38	21	2	98	25	88	44	18-1/8
10	481	15	12	6B	13-1/2	21-7/8	17	13-1/2	38	20	1-1/4	98	31	88	44	13-1/8
10	481	18	12	6B	13-1/2	21-7/8	17	13-1/2	38	22	2	98	31	88	44	13-1/8
10	481	18D	12	7A	12-1/4	24-1/4	20	12-1/4	43	24	2	98	31	88	44	15.69

NOTES:
1. All dimensions are in inches and may vary ±3/8".
2. Not for construction purposes, unless certified.
3. Caution: The driveshaft is designed to operate at a 2° angle with the input and output shafts in parallel. The engine crankshaft is to be set with a parallel offset of "B" ± 0.10 inches vertically above the pump shaft and 0.00" ± 0.10 inch parallel offset horizontally right or left of the pump shaft. Refer to the Certified Driveshaft Instructions Manual for alignment instructions.
4. Pump suction and discharge flanges are ANSI Standard flat face.
5. Left-hand (counterclockwise) rotation is not available.
6. Optional: base mounted controller (not shown) add 25" to "HB" (length of base) and 2 additional ø1.00 x 2.00 slots.

© 2013 Pentair Ltd.

CLARKE
Fire Protection Products, Inc.

JU6H-UFADX8
INSTALLATION & OPERATION DATA (I&O Data)
USA Produced

Basic Engine Description

Engine Manufacturer	John Deere Co.
Ignition Type	Compression (Diesel)
Number of Cylinders	6
Bore and Stroke - in (mm)	4.19 (106) X 5 (127)
Displacement - in³ (L)	415 (6.8)
Compression Ratio	17.0:1
Valves per cylinder	
Intake	2
Exhaust	2
Combustion System	Direct Injection
Engine Type	In-Line, 4 Stroke Cycle
Fuel Management Control	Electronic, High Pressure Common Rail
Firing Order (CW Rotation)	1-5-3-6-2-4
Aspiration	Turbocharged
Charge Air Cooling Type	Raw Water
Rotation, viewed from front of engine, Clockwise (CW)	Standard
Engine Crankcase Vent System	Open
Installation Drawing	D628
Weight - lb (kg)	1747 (792)

Power Rating	**1760**
Nameplate Power - HP (kW)	305 (227.5)

Cooling System - [C051386]	**1760**
Engine Coolant Heat - Btu/sec (kW)	143 (151)
Engine Radiated Heat - Btu/sec (kW)	69 (72.8)
Heat Exchanger Minimum Flow	
60°F (15°C) Raw H_20 - gal/min (L/min)	28 (106)
100°F (37°C) Raw H_20 - gal/min (L/min)	38 (144)
Heat Exchanger Maximum Cooling Raw Water	
Inlet Pressure - psi (bar)	60 (4.1)
Flow - gal/min (L/min)	40 (151)
Typical Engine H_20 Operating Temp - °F (°C)[1]	180 (82.2) - 195 (90.6)
Thermostat	
Start to Open - °F (°C)	180 (82.2)
Fully Opened - °F (°C)	203 (95)
Engine Coolant Capacity - qt (L)	22.2 (21)
Coolant Pressure Cap - lb/in² (kPa)	15 (103)
Maximum Engine Coolant Temperature - °F (°C)	230 (110)
Minimum Engine Coolant Temperature - °F (°C)	160 (71.1)
High Coolant Temp Alarm Switch - °F (°C)[2]	235 (113) - 241 (116)

Electric System - DC	**Standard**		**Optional**	
System Voltage (Nominal)	12		24	
Battery Capacity for Ambients Above 32°F (0°C)				
Voltage (Nominal)	12	[C07633]	24	[C07633]
Qty. Per Battery Bank	1		2	
SAE size per J537	8D		8D	
CCA @ 0°F (-18°C)	1400		1400	
Reserve Capacity - Minutes	430		430	
Battery Cable Circuit, Max Resistance - ohm	0.0012		0.0012	
Battery Cable Minimum Size				
0-120 in. Circuit Length[3]	00		00	
121-160 in. Circuit Length[3]	000		000	
161-200 in. Circuit Length[3]	0000		0000	
Charging Alternator Maximum Output - Amp,	40	[C071363]	55	[C071365]
Starter Cranking Amps, Rolling - @60°F (15°C)	440	[RE69704/RE70404]	250	[C07819/C07820]

NOTE: This engine is intended for indoor installation or in a weatherproof enclosure. [1]Engine H_2O temperature is dependent on raw water temperature and flow. [2]High Coolant Switch threshold varies with engine load. [3]Positive and Negative Cables Combined Length.

CLARKE
Fire Protection Products, Inc.

JU6H-UFADX8
INSTALLATION & OPERATION DATA (I&O Data)
USA Produced

Exhaust System	**1760**
Exhaust Flow - ft.³/min (m³/min)	1400 (39.6)
Exhaust Temperature - °F (°C)	961 (516)
Maximum Allowable Back Pressure - in H_20 (kPa)	30 (7.5)
Minimum Exhaust Pipe Dia. - in (mm)[4]	6 (152)

Fuel System	**1760**
Fuel Consumption - gal/hr (L/hr)	14.6 (55.3)
Fuel Return - gal/hr (L/hr)	21.3 (80.6)
Fuel Supply - gal/hr (L/hr)	35.9 (136)
Fuel Pressure - lb/in² (kPa)	3 (20.7) - 6 (41.4)
Minimum Line Size - Supply - in.	.50 Schedule 40 Steel Pipe
Pipe Outer Diameter - in (mm)	0.848 (21.5)
Minimum Line Size - Return - in.	.375 Schedule 40 Steel Pipe
Pipe Outer Diameter - in (mm)	0.675 (17.1)
Maximum Allowable Fuel Pump Suction Lift with clean Filter - in H_20 (mH_20)	80 (2)
Maximum Allowable Fuel Head above Fuel pump, Supply or Return - ft (m)	6.6 (2)
Fuel Filter Micron Size	2 (Secondary)

Heater System	**Standard**	**Optional**
Engine Coolant Heater		
Wattage (Nominal)	1360	1360
Voltage - AC, 1 Phase	115 (+5% -10%)	230 (+5%, -10%)
Part Number	[C123640]	[C123644]

Air System	**1760**	
Combustion Air Flow - ft.³/min (m³/min)	525 (14.9)	
Air Cleaner	**Standard**	**Optional**
Part Number	[C03244]	[C03327]
Type	Indoor Service Only, with Shield	Canister, Single-Stage
Cleaning method	Washable	Disposable
Air Intake Restriction Maximum Limit		
Dirty Air Cleaner - in H_20 (kPa)	14 (3.5)	14 (3.5)
Clean Air Cleaner - in H_20 (kPa)	7 (1.7)	5 (1.2)
Maximum Allowable Temperature (Air To Engine Inlet) - °F (°C) [5]	130 (54.4)	

Lubrication System	
Oil Pressure - normal - lb/in² (kPa)	40 (276) - 60 (414)
Low Oil Pressure Alarm Switch - lb/in² (kPa) [6]	30 (207) to 35 (241)
In Pan Oil Temperature - °F (°C)	220 (104) - 245 (118)
Total Oil Capacity with Filter - qt (L)	34.3 (32.5)

Lube Oil Heater	**Optional**	**Optional**
Wattage (Nominal)	150	150
Voltage	120V (+5%, -10%)	240V (+5%, -10%)
Part Number	C04430	C04431

Performance	**1760**
BMEP - lb/in² (kPa)	331 (2280)
Piston Speed - ft/min (m/min)	1467 (447)
Mechanical Noise - dB(A) @ 1m	C133380
Power Curve	C132969

[4]Based on Nominal System. Back pressure flow analysis must be done to assure maximum allowable back pressure is not exceeded. (Note: minimum exhaust Pipe diameter is based on: 15 feet of pipe, one 90° elbow, and a silencer pressure drop no greater than one half of the maximum allowable back pressure.) [5]Review for horsepower derate if ambient air entering engine exceeds 77°F (25°C). [6]Low Oil Pressure Switch threshold varies w/engine speed. [ ] indicates component reference part number.

JU4H, JU4R & JU6H, JU6R ENGINE MODELS
ENGINE MATERIALS AND CONSTRUCTION

Air Cleaner
Type…… Indoor Usage Only
Oiled Fabric Pleats
Material…… Surgical Cotton
Aluminum Mesh

Air Cleaner - Optional
Type…… Canister
Material…… Pleated Paper
Housing…… Enclosed

Camshaft
Material…… Cast Iron
Chill Hardened
Location…… In Block
Drive…… Gear, Spur
Type of Cam…… Ground

Charge Air Cooler (JU6H-60,62,68,74,84, ADK0, AD58, ADNG, ADN0, ADQ0, ADR0, AAQ8, AARG, ADP8, ADP0, ADT0, AD88, ADR8, AD98, ADS0, ADW8, ADX8, AD98 only)
Type…… Raw Water Cooled
Materials (in contact with raw water)
Tubes…… 90/10 CU/NI
Headers …… 36500 Muntz
Covers …… 83600 Red Brass
Plumbing …… 316 Stainless Steel/ Brass
90/10 Silicone

Charge Air Cooler (JU6R-AA67, 59, 61, PF, Q7, RF, S9, 83 only)
Type…… Air to Air Cooled
Materials
Core…… Aluminum

Coolant Pump
Type…… Centrifugal
Drive…… Poly Vee Belt

Coolant Thermostat
Type…… Non Blocking
Qty…… 1

Cooling Loop (Galvanized)
Tees, Elbows, Pipe…… Galvanized Steel
Ball Valves…… Brass ASTM B 124,
Solenoid Valve…… Brass
Pressure Regulator…… Bronze
Strainer…… Cast Iron (1/2" - 1" loops) or
Bronze (1.25" - 2" loops)

Cooling Loop (Sea Water)
Tees, Elbows, Pipe…… 316 Stainless Steel
Ball Valves…… 316 Stainless Steel
Solenoid Valve…… 316 Stainless Steel
Pressure Regulator/Strainer Cast Brass ASTM B176
C87800

Cooling Loop (316SS)
Tees, Elbows, Pipe…… 316 Stainless Steel
Ball Valves…… 316 Stainless Steel
Solenoid Valve…… 316 Stainless Steel
Pressure Regulator/Strainer 316 Stainless Steel

Connecting Rod
Type…… I-Beam Taper
Material…… Forged Steel Alloy

Crank Pin Bearings
Type…… Precision Half Shell
Number…… 1 Pair Per Cylinder
Material…… Wear-Guard

Crankshaft
Material…… Forged Steel
Type of Balance…… Dynamic

Cylinder Block
Type…… One Piece with
Non-Siamese Cylinders
Material…… Annealed Gray Iron

Cylinder Head
Type…… Slab 2 Valve
Material…… Annealed Gray Iron

Cylinder Liners
Type…… Centrifugal Cast, Wet Liner
Material…… Alloy Iron Plateau, Honed

Fuel Pump
Type…… Diaphragm
Drive…… Cam Lobe

Heat Exchanger (USA) - JU4H & JU6H Only
Type…… Tube & Shell
Materials
Tube & Headers…… Copper
Shell…… Copper
Electrode…… Zinc

Heat Exchanger (UK) - JU4H & JU6H Only
Type…… Tube & Bundle

Materials
Tube & Headers…… Copper
Shell…… Aluminum

Injection Pump
Type…… Rotary
Drive…… Gear

Lubrication Cooler
Type…… Plate

Lubrication Pump
Type…… Gear
Drive…… Gear

Main Bearings
Type…… Precision Half Shells
Material…… Steel Backed-Aluminum
Lined

Piston
Type and Material…… Aluminum Alloy with
Reinforced Top Ring Groove
Cooling…… Oil Jet Spray

Piston Pin
Type…… Full Floating - Offset

Piston Rings
Number/Piston…… 3
Top…… Keystone Barrel Faced -
Plasma Coated
Second…… Tapered Cast Iron
Third…… Double Rail Type
w/Expander Spring

Radiator - JU4R & JU6R Only
Type…… Plate Fin
Materials
Core…… Copper & Brass
Tank & Structure…… Steel

Valves
Type…… Poppet
Arrangement…… Overhead Valve
Number/Cylinder…… 1 intake
1 exhaust
Operating Mechanism…… Mechanical Rocker Arm
Type of Lifter…… Large Head
Valve Seat Insert…… Replaceable

CLARKE

Fire Protection Products, Inc.

FIRE PUMP MODEL: JU6H-UFADX8
Heat Exchanger Cooled
Raw Water Charge Cooling
Tier 3 Emissions Certified

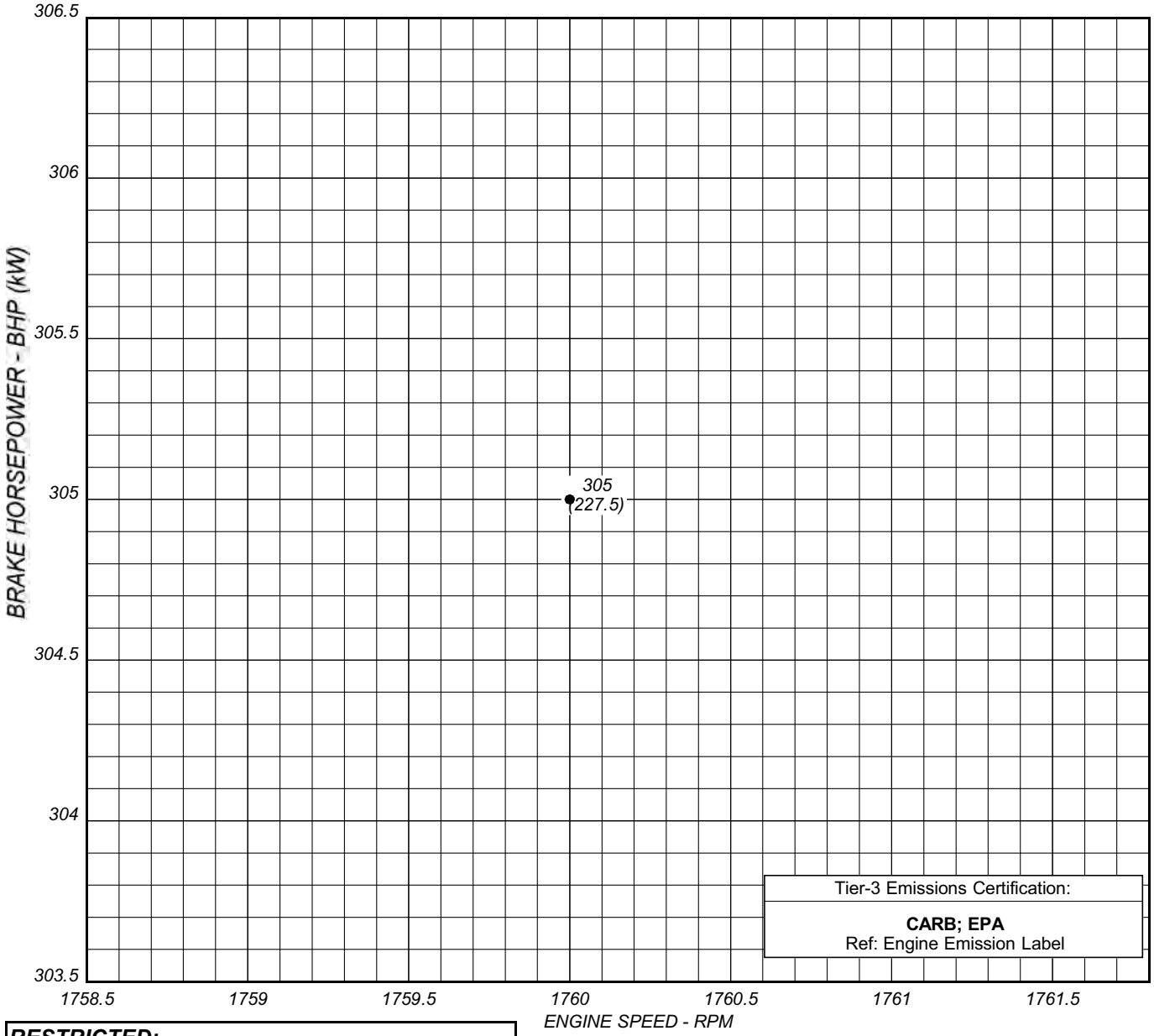

Tier-3 Emissions Certification:

CARB; EPA
Ref: Engine Emission Label

RESTRICTED:
USE ONLY FOR STAND-BY FIRE PUMP APPLICATIONS

ENGINE PERFORMANCE:
STANDARD CONDITIONS: (SAE J1349, ISO 3046)
77°F (25°C) AIR INLET TEMPERATURE
29.61 IN. (751.1MM) HG BAROMETRIC PRESSURE
#2 DIESEL FUEL (SEE C13940)

KEVIN KUNKLER 06FEB09

NAMEPLATE BHP (MAXIMUM PUMP LOAD)

THIS DRAWING AND THE INFORMATION HEREIN ARE OUR PROPERTY AND MAY BE USED BY OTHER ONLY AS AUTHORIZED BY US. UNPUBLISHED -- ALL RIGHTS RESERVED UNDER THE COPYRIGHT LAWS.

CREATED	DATE CREATED
KK	02/06/09

ENGINE MODEL JU6H-UFADX8

DRAWING NO.	REV
C132969	A

DO NOT SCALE

DATUMS:

-A- - MOUNTING FACE OF FLYWHEEL

-B- - ENGINE CRANKSHAFT HORIZONTAL CENTERLINE

-C- - ENGINE CRANKSHAFT VERTICAL CENTERLINE

- CENTER OF GRAVITY OF ENGINE

- CLOCKWISE ROTATION WHEN VIEWED FROM FRONT OF ENGINE

DRAWING SUBJECT TO CHANGE WITHOUT NOTICE

CAUTION:

ALL PLUMBING MUST BE SUPPORTED AND/OR ISOLATED SO THAT NO WEIGHT OR STRESS IS APPLIED TO ANY ENGINE COMPONENT

ATTENTION

REFER TO THE SPECIFIC MODEL "INSTALLATION AND OPERATION DATA" FOR INSTALLATION GUIDELINES

"TRWA" (TURBOCHARGED w/ RAW WATER AFTERCOOLING) MODELS	JU6H-UFAD58, -UFAD88 JU6H-UFADK0, -UFADNG JU6H-UFADP8, -UFADN0 JU6H-UFADM8, -UFADMG JU6H-UFADP8 (MODELS SHOWN)
	JU6H-UFAD98 -UFADP0 JU6H -UFADQ0, -UFADR0 JU6H-UFADR8, -UFADS0 JU6H-UFADS8, -UFADT0 JU6H-UFADW8,-UFADX8

***FOR ENGINES BUILT IN USA BEGINNING DECEMBER 2012**

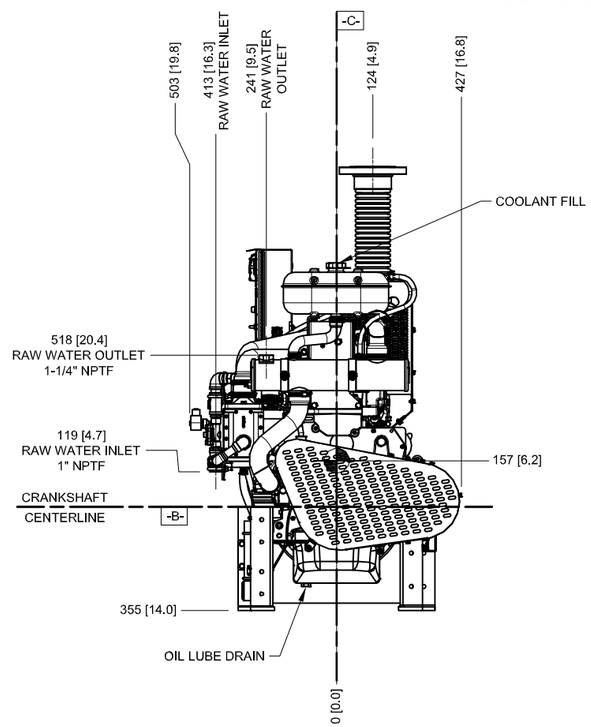

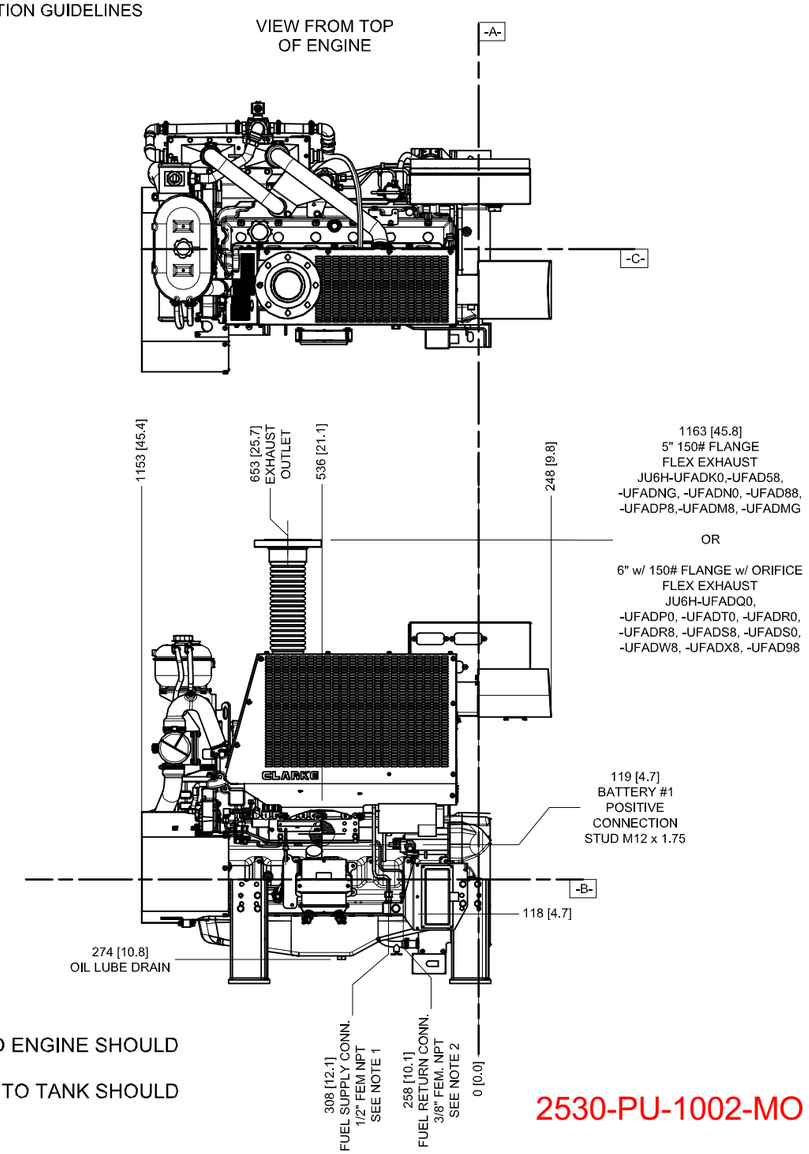

NOTES:
1. FUEL SUPPLY PIPING FROM TANK TO ENGINE SHOULD BE 1/2"MINIMUM PIPE DIAMETER.
2. FUEL RETURN PIPING FROM ENGINE TO TANK SHOULD BE 3/8" MINIMUM PIPE DIAMETER.

2530-PU-1002-MO

REV	DESCRIPTION	ECN#	DWN	APVD	DATE
B	ADDED NEW TIER 3 ENGINE MODELS	1645	KJM	KJE	06JAN09
C	ADDED JU6H-UFADP8 ENGINE MODEL	1645	MAL	KJE	23FEB09
D	REVISED EXH FLEX CONNECTION DATA	1645	DMP	KJE	09NOV09
E	REVISED EXH FLEX CONNECTION DATA	1997	JCA	KJE	23JUN10
F	REVISED ENGINE FOOT MOUNTING HOLE LOCATIONS - PAGE 2	1901	JCA	AMC	28JUL10
G	ADDED DIMENSIONS FRONT VIEW ZONE D6 PG1	2106	DMP	KJE	28OCT10
H	ADDED ENGINE MODELS: JU6H-UFADM8 & JU6H-UFADMG	2173	JCA	KJE	09DEC10
J	UPDATED MOUNTING FEET AND HEATER SETUP	2063	AMC	MOD	19JUL12
K	RAW WATER OUTLET WAS 1" NPTF	2649	MOH	KJE	04DEC12

THIS DRAWING AND THE INFORMATION HEREON ARE OUR PROPERTY AND MAY BE USED BY OTHERS ONLY AS AUTHORIZED BY US. UNPUBLISHED--ALL RIGHTS RESERVED UNDER THE COPYRIGHT LAWS.

MACHINE TOLERANCE

DECIMAL	mm	Inch
X.	± 1.5	
X.X	± 0.8	± 0.06
X.XX	± 0.3	± 0.03
X.XXX	± 0.025	± 0.01
X.XXXX		± 0.001

ANGULAR: ± 0.5°

FABRICATION TOLERANCE

DECIMAL	mm	Inch
X.	± 3	
X.X	± 1.5	± 0.12
X.XX		± 0.06

ANGULAR: ± 1.0°

YES / NO CONTROLLED DRAWING

CLARKE
Fire Protection Products, Inc.

DRWN: MWLEMING
DATE: 2/25/2009
ENGR: KJKUNKLER
MATERIAL
ASSEMBLY

NAME: INSTALLATION DRAWING, FIRE PUMP ENGINE JU6H TIER 3 MODELS

PART NO.: D628 REV: K

SCALE: NTS UNITS: MM [INCH] PAGE 1 OF 2

DO NOT SCALE

FOR ENGINE SPECIFIC OPTIONS
SEE www.CLARKEFIRE.com

DETAIL DATUM -A-
BARE FLYWHEEL

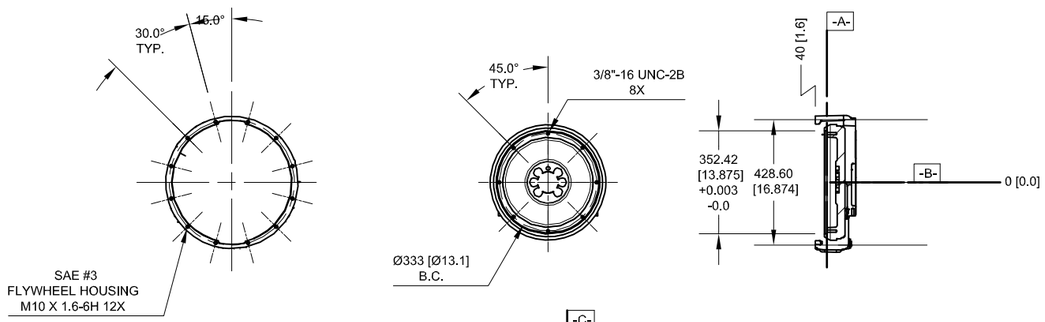

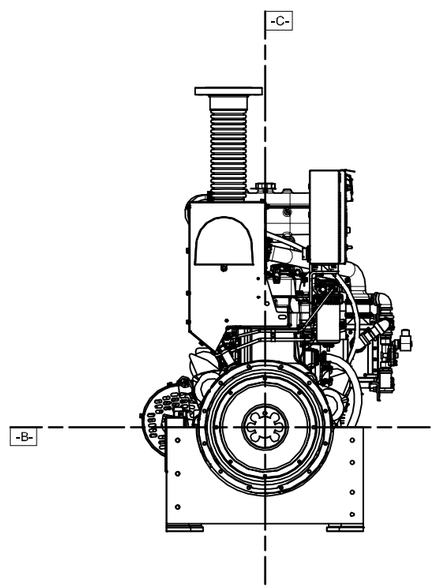

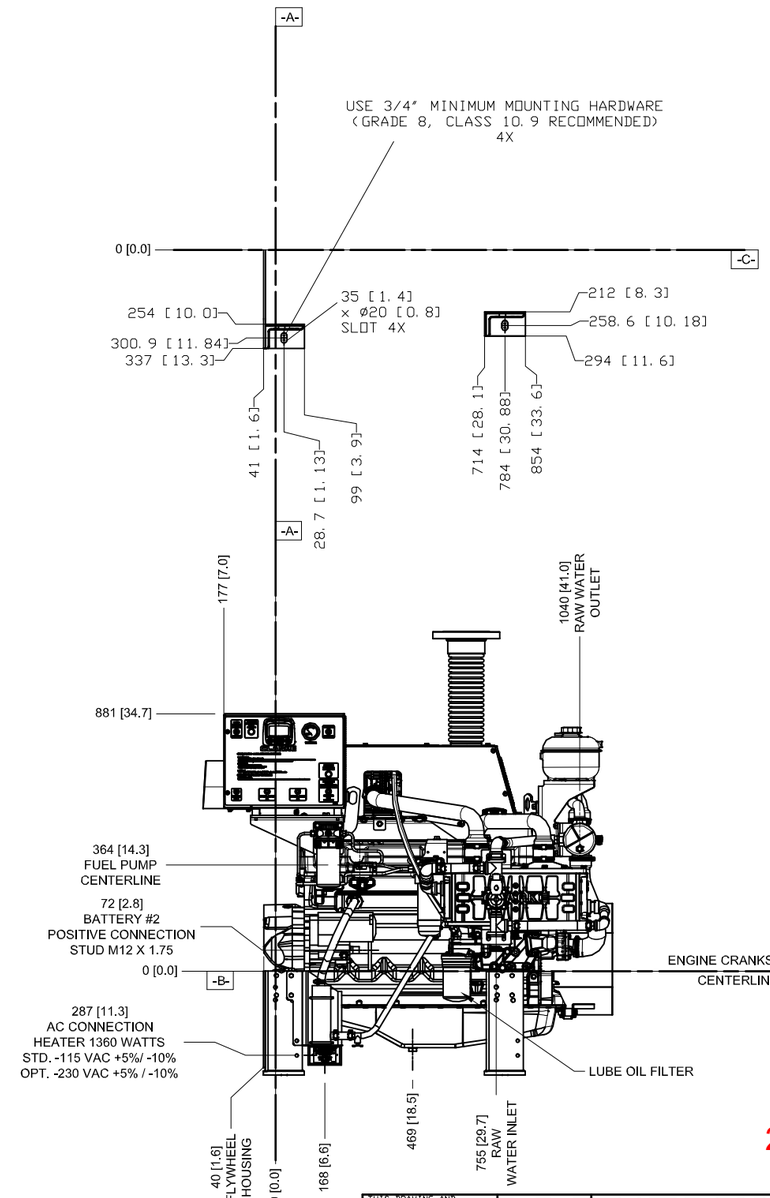

2530-PU-1002-MO

***FOR ENGINES BUILT IN USA**
BEGINNING DECEMBER 2012

DRAWING SUBJECT
TO CHANGE
WITHOUT NOTICE

THIS DRAWING AND THE INFORMATION HEREON ARE OUR PROPERTY AND MAY BE USED BY OTHERS ONLY AS AUTHORIZED BY US. UNPUBLISHED--ALL RIGHTS RESERVED UNDER THE COPYRIGHT LAWS.

MACHINE TOLERANCES

DECIMAL	mm	inch
X.	±1.5	
X.X	±0.8	±0.06
X.XX	±0.3	±0.03
X.XXX	±0.025	±0.01
X.XXXX		±0.001

ANGULAR: ±0.5°

FABRICATION TOLERANCES

DECIMAL	mm	inch
X.	±3	
X.X	±1.5	±0.12
X.XX		±0.06

ANGULAR: ±1.0°

CONTROLLED DRAWING: YES ☒ NO ☐

CLARKE
Fire Protection Products, Inc.

DRWN	MWLEMING
DATE	2/25/2009
ENGR	KKUNKLER
MATERIAL	
ASSEMBLY	
NAME	INSTALLATION DRAWING, FIRE PUMP ENGINE JU6H TIER 3 MODELS
PART NO.	D628
REV	K
SCALE	NTS
UNITS	MM [INCH]
PAGE	2 OF 2

LISTED AND NON-LISTED DRIVESHAFT

Short Coupled (Standard Lengths) Fire Pump Driveshafts for Clarke Engine Models

Engine Model	Driveshaft Model	SAE Flywheel Size	SAE Flywheel Housing Size	Companion Flange Series
JU4H-UFAEA0	CDS10-SC (See Note 10)	11.5	3	CF10
JU4H-UF10				
JU4H-UF12				
JU4H-UF14				
JU4H-UF20				
JU4H-UF22				
JU4H-UF24				
JU4H-UFAB26				
JU4R-UFAEA9				
JU4R-UF09				
JU4R-UF11				
JU4R-UF13				
JU4R-UF19				
JU4R-UF21				
JU4R-UF23				
JU4H-UFAEB	CDS20-SC (See Note 10)	11.5	3	CF20
JU4H-UFAEF2				
JU4H-UF30				
JU4H-UF32				
JU4H-UF34				
JU4H-UF40				
JU4H-UF42				
JU4H-UFH0				
JU4H-UFH2				
JU4H-UFH8				
JU4H-UFADJ8				
JU4H-UFADJ2				
JU4R-UF40				
JU4R-UFAEE7				
JU4R-UFAEF1				
JU6H-UF30	CDS20-S1 (See Note 10)	11.5	3	CF20
JU6H-UF32				
JU6H-UF34				
JU6H-UFD0				
JU6H-UFD2				
JU6R-UFAAD9				
JU6R-UFAAD1				
JU6R-UFAA29				
JU6R-UFAA31				
JU6R-UFAA33				

Engine Model	Driveshaft Model	SAE Flywheel Size	SAE Flywheel Housing Size	Companion Flange Series
JU4H-UF50	CDS30-S1 (See Note 10)	11.5	3	CF30
JU4H-UF52				
JU4H-UF54				
JU4H-UF58				
JU4H-UFAD5G				
JU4H-UFADJG				
JU4H-UFADP0				
JU4H-UFADR0				
JU4H-UFADW8				
JU4H-UFADY8				
JU4R-UF49				
JU4R-UF51				
JU4R-UF53				
JU6H-UF50				
JU6H-UF52				
JU6H-UF54				
JU6H-UF58				
JU6H-UF60				
JU6H-UF62				
JU6H-UF68				
JU6H-UF84				
JU6H-UFM0				
JU6H-UFM2				
JU6H-UFM8				
JU6H-UFG8				
JU6H-UFABL0				
JU6H-UFABL2				
JU6H-UFABL8				
JU6H-UFAD58				
JU6R-UFAAG7				
JU6R-UFAAL7				
JU6R-UFAAL9				
JU6R-UFAAL1				
JU6R-UFAAM7				
JU6R-UFAAM9				
JU6R-UFAAM1				
JU6R-UFAAS7				
JU6R-UFAAS9				
JU6R-UFAAS1				
JU6R-UFAAS3				
JU6R-UFAA67				
JU6R-UFAA59				
JU6R-UFAA61				
JU6R-UFAA83				
JU6H-UFADM8				
JU6H-UFADMG				
JU6H-UFADNG				
JU6H-UFAB76				
JU6H-UFADK0				
JU6H-UFADN0				
JU6H-UFADQ0				
JU6H-UFADR0				

Engine Model	Driveshaft Model		SAE Flywheel Size	SAE Flywheel Housing Size	Companion Flange Series
JU4H-UFAD98		N/A	11.5	3	CF50
JU6H-UFAAQ8					
ZF6H-UFAC60					
JU6H-UFAAPG					
JU6H-UFAARG					
JU6H-UFADP8					
JU6H-UFADP0					
JU6H-UFAD88					
JU6H-UFAD98					
JU6H-UFADT0					
JU6H-UFADR8					
JU6H-UFADS8					
JU6H-UFADS0					
JU6H-UFAAS0					
JU6H-UFADW8					
JU6H-UFADX8					
JU6R-UFADX9					
JU6R-UFADX10	CDS50-SC Only at 1470 thru 2100 RPM (See Note 9 & 10)	SC81A (See Note 11)			
JU6R-UFADX11					
JU6R-UFADX12					
JW6H-UFAD80					
JW6H-UFADD0					
JW6H-UFADF0					
ZF6H-UFAC70					
JW6H-UFADJ0					
JW6H-UFAAM8					
JW6H-UFAD70					
JW6H-UFAA80					
DP6H-UFAAX8					
DP6H-UFAA50					
DP6H-UFAA88					
DP8HUFAA62					
DP6H-UFAA70					
DQ6H-UFAA48					
DQ6H-UFAA40					
DQ6H-UFAA50					
DQ6H-UFAA60					
DQ6H-UFAA88					
DQ6H-UFAA98					
JX6H-UFADF0			11.5 OR 14 (SEE NOTE 12)	1	180-10
JX6H-UFAD60					
JX6H-UFADK0					
JX6H-UFAD88					
JX6H-UFADN0					
JX6H-UFADP0					
DR8H-UFAA40					
DR8H-UFAA5G					
DR8H-UFAA68					
DR8H-UFAA62					
DS0H-UFAAM0					
DS0H-UFAAN0	N/A	SC2160A (See Note 11)	14		
DS0H-UFAA68					
DS0H-UFAA60					
DS0H-UFAA98					
DS0H-UFAA92					
DT2H-UFAA20					
DT2H-UFAA58					
DT2H-UFAA50					
DT2H-UFAA60					
DT2H-UFAA88					
DT2H-UFAA98					
DT2H-UFAA92		SC2390 (See Note 11)			

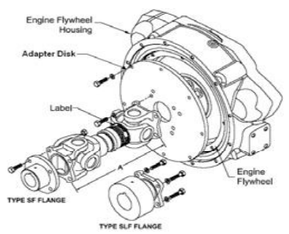

* Rough Stock Bore = Solid Hub with Centering Dimple for machining of special bores & keyways

SHORT COUPLED DRIVESHAFT								
Model	CDS10-SC	CDS20-SC	CDS20-S1	CDS30-S1	CDS50-SC	SC81A	SC2160A	SC2390
Part Number	C083765	C083766	C083767	C083768	C083770	C08628	C083771	C084898
Useable Length "A" (Inch)	9.5 - 10.2	9.8 - 10.7	14.1 - 15.7	14.1 - 15.7	18.9 - 21.9	18.9 - 20.8	18.5 - 20.67	25.23 - 29.56

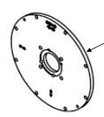

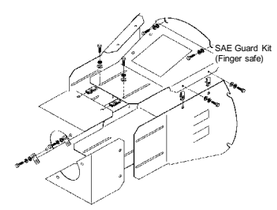

SAE 11.5" ADAPTER DISC						
Series	CDS10	CDS20	CDS30	CDS50	SC81A	SC2160A
Part Number	C08448	C08448	C083762	C083763	C083763	C084708

SAE 14" ADAPTER DISC				
Series	CDS50	SC81A	SC2160A	SC2390
Part Number	C084947	C084947	C084930	C084930

SAE #3 GUARD KIT	CDS20-SC	CDS20-S1	CDS30-S1	CDS50-SC[1] /SC81A	CDS50-SC[2] /SC81A
	C10382	C10383	C10383	C10433	C10455

Model	CDS10-SC
Part Number	C10382

[1] JW6H (TIER 1)
[2] JU6H & JW6H (TIER 2)

SAE #1 GUARD KIT	SC81A	SC2160A	SC2390
	C101074	C101074[1] / C101081[2]	C101078

Model	CDS50-SC
Part Number	C101074

[1] DR8H, DS0H, & DT2H
[2] JX6H

Companion Flange Part Numbers						
Diameter (inch)	Keyway (inch)	CF10	CF20	CF30	CF50	180-10
*Rough Stock Bore	NONE	C084039	C084212	C083333	C083758	C083183
1.000	0.250 x 0.125	C083966				
1.063	0.250 x 0.125	C083968				
1.125	0.250 x 0.125	C083970				
1.188	0.250 x 0.125	C083972				
1.250	0.250 x 0.125	C083974	C084116	C083262	C083662	C083112
1.313	0.312 x 0.156	C083976	C084118	C083264	C083663	
1.375	0.312 x 0.156	C083978	C084120	C083265	C083664	C083114
1.438	0.375 x 0.188	C083980	C084122	C083270	C083666	C083117
1.500	0.375 x 0.188	C083982	C084124	C083272	C083667	C083119
1.563	0.375 x 0.188	C083984	C084126	C083274	C083668	C083121
1.625	0.375 x 0.188	C083986	C084128	C083276	C083669	C083123
1.688	0.375 x 0.188	C083988	C084130	C083280	C083670	C083125
1.750	0.375 x 0.188	C083990	C084132	C083282	C083671	C083127
1.813	0.500 x 0.250	C083992	C084134	C083283	C083672	
1.875	0.500 x 0.250	C083994	C084136	C083285	C083674	C083129
1.938	0.500 x 0.250	C083996	C084138	C083286	C083675	
2.000	0.500 x 0.250	C083998	C084140	C083287	C083676	C083131
2.063	0.500 x 0.250	C084000	C084142	C083289	C083678	C083134
2.125	0.500 x 0.250	C084002	C084144	C083291	C083679	C083136
2.188	0.500 x 0.250	C084004	C084146	C083292	C083680	
2.250	0.500 x 0.250	C084006	C084148	C083293	C083682	C083140
2.313	0.625 x 0.312	C084008	C084150	C083295	C083684	
2.375	0.625 x 0.312	C084010	C084152	C083296	C083685	
2.438	0.625 x 0.312	C084012	C084154	C083297	C083686	C083144
2.500	0.625 x 0.312	C084014	C084156	C083298	C083687	C083146
2.563	0.625 x 0.312	C084016	C084158	C083299	C083688	
2.625	0.625 x 0.312	C084018	C084160	C083300	C083689	C083148
2.688	0.625 x 0.312	C084020	C084162	C083301	C083690	
2.750	0.625 x 0.312	C084022	C084164	C083302	C083691	C083150
2.813	0.750 x 0.375		C084166	C083303	C083694	
2.875	0.750 x 0.375		C084168	C083304	C083695	
2.938	0.750 x 0.375		C084170	C083305	C083696	C083154
3.000	0.750 x 0.375		C084172	C083306	C083697	C083155
3.063	0.750 x 0.375		C084174	C083307	C083698	
3.125	0.750 x 0.375		C084176	C083308	C083699	C083157
3.188	0.750 x 0.375		C084178	C083309	C083700	C083158
3.250	0.750 x 0.375		C084180	C083310	C083701	
3.313	0.875 x 0.438		C084182	C083311	C083702	
3.375	0.875 x 0.438		C084184	C083312	C083703	
3.438	0.875 x 0.438		C084186	C083313	C083704	
3.500	0.875 x 0.438		C084188	C083314	C083705	C083159
3.563	0.875 x 0.438		C084190	C083315	C083706	
3.625	0.875 x 0.438		C084192	C083316	C083707	
3.688	0.875 x 0.438		C084194	C083317	C083708	
3.750	0.875 x 0.438		C084196	C083318	C083709	C083161
3.813	0.875 x 0.438			C083319	C083710	
3.875	1.000 x 0.500			C083320	C083711	
3.938	1.000 x 0.500			C083321	C083712	
4.000	1.000 x 0.500			C083322	C083713	C083165
4.063	1.000 x 0.500			C083323	C083714	
4.125	1.000 x 0.500			C083324	C083715	
4.188	1.000 x 0.500			C083325	C083716	
4.250	1.000 x 0.500			C083326	C083717	

Continued

Companion Flange Part Numbers						
Diameter (inch)	Keyway (inch)	CF10	CF20	CF30	CF50	180-10
*Rough Stock Bore	NONE	C084040	C084213	C083334	C083759	C083184
4.313	1.000 x 0.500			C083327	C083718	
4.375	1.000 x 0.500			C083328	C083719	
4.438	1.000 x 0.500			C083329	C083720	
4.500	1.000 x 0.500			C083330	C083721	
4.563	1.000 x 0.500				C083722	
4.625	1.000 x 0.500				C083723	
4.688	1.000 x 0.500				C083724	
4.750	1.250 x 0.625				C083725	
4.813	1.250 x 0.625				C083726	
4.875	1.250 x 0.625				C083727	
4.938	1.250 x 0.625				C083728	
5.000	1.250 x 0.625				C083729	
5.063	1.250 x 0.625				C083730	
5.125	1.250 x 0.625				C083731	
5.188	1.250 x 0.625				C083732	
5.250	1.250 x 0.625				C083733	
5.313	1.250 x 0.625				C083734	
5.375	1.250 x 0.625				C083735	
5.438	1.250 x 0.625				C083736	
5.500	1.250 x 0.625				C083737	

Notes:

1. Driveshaft Assembly consists of:
   (1) Driveshaft w/mounting hardware to adapter disc
2. Optional Driveshaft Assembly items consist of:
   (1) SAE Adapter Disc w/ mounting hardware to engine flywheel
   (1) Pump Companion Flange w/mounting hardware to driveshaft
   (1) SAE Fingersafe Telescoping Guard w/mounting hardware
3. For bores and keyways not shown contact Clarke
4. Listed Flexible Connecting Shafts (for rated BHP's & speeds given in tables above) can only be used with fixed speed Centrifugal Fire Pumps, contact Clarke for application guidelines for Positive Displacement Fire Pumps
5. Listed for use with Diesel Engine Driven Fire Pumps only
6. Shading denotes Type SLF Companion Flanges
7. It is recommended that a torsional analysis be conducted on the actual drive system arrangement
8. For Driveshaft dimensional data see Installation Drawing D615
9. CDS50 Listed Driveshafts at 2100 RPM Only for JW6H-UFAA80 & JW6H-UFAD80. CDS50-SC Listed Driveshaft at 1470 RPM only for DP6H-UFAA70 and at 1760 RPM only for DP6H-UFAA88
10. UL Listed Driveshaft
11. Non-Listed Driveshaft
12. All JX6H Engine Models will feature a 14" SAE Flywheel as of Aug. 1 2014.

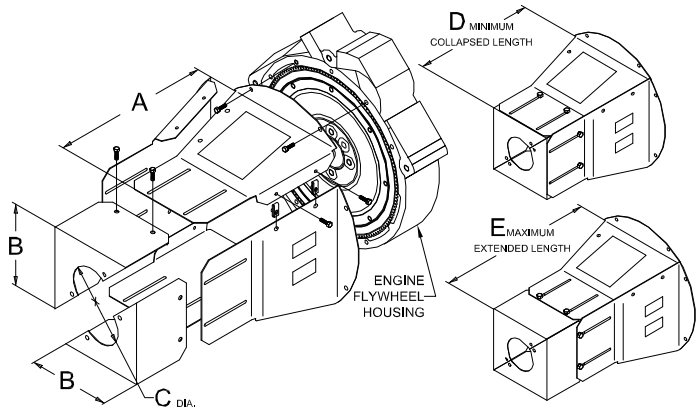

STYLE #1

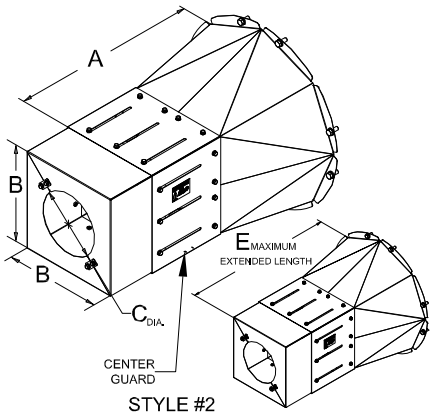

STYLE #2

KIT PART NUMBER	USED WITH DRIVESHAFT MODEL		SAE FLYWHEEL HOUSING #	STYLE	GUARD PART NUMBER	CENTER GUARD PART NUMBER	END CAP PART NUMBER	USED WITH BASE ENGINE MODELS	A	B	C	D	E
	LISTED	NON-LISTED											
C10382	CDS10-SC	USE LISTED DRIVESHAFT	3	#1	C101137	NA	C101143	JU4H & JU4R	247.7[9.75]	227.3[8.95]	109.5[4.32]	297.7[11.72]	373.9[14.72]
	CDS20-SC												
C10383	CDS20-S1				C101141			JU6H & JU6R	381.0[15.00]			383.5[15.10]	507.2[19.97]
	CDS30-S1							JU4H, JU4R, JU6H & JU6R					
C10433	CDS50-SC (SEE NOTE 6)	SC81A (SEE NOTE 6)						JW6H (TIER 1)					
C10455					C101140	NA	C101142	JU6H, JU6R & JW6H (TIER 3/NON-EM)	541.0[21.30]	273.1[10.75]	125.4[4.94]	541.0[21.30]	686.6[27.03]
	CDS50-SC (SEE NOTE 7)	SC81A (SEE NOTE 7)						ZF6H (TIER 2)					
C101091	USE NONLISTED DRIVESHAFT	SC2160A	1	#2	C101138	C101072	C101139	JX6H	557.1[21.93]	305.3[12.02]	127.0[5.00]	EQUAL TO "A" DIMENSION	707.1[27.84]
C101074	CDS50-SC (SEE NOTE 6)	SC81A (SEE NOTE 6)						DP6H					
	CDS50-SC (SEE NOTE 6)	USE LISTED DRIVESHAFT						DQ6H					
	USE NONLISTED DRIVESHAFT	SC2160A						DR8H, DS0H, & DT2H					
C101078		SC2390				C101071		DT2H	745.2[29.34]				895.1[35.24]
	EXTENDED LENGTH DRIVESHAFTS	EXTENDED LENGTH DRIVESHAFTS						DP6H, DQ6H, DR8H, DS0H, & DT2H					
C101080						C101079			910.3[35.84]				1060.5[41.75]
C101097						C101071		JX6H	745.2[29.34]				895.1[35.24]
C101098						C101079			910.3[35.84]				1060.5[41.75]

NOTES:
1. GUARDING DESIGNED FOR FINGER SAFE OPERATION ONLY.
2. FOR HARDWARE REFERENCE C135181.
3. FOR ADAPTER DISCS SEE DRAWING D620.
4. FOR DRIVESHAFTS SEE DRAWING D615.
5. FOR COMPANION FLANGES SEE DRAWING D621.
6. CDS50-SC ONLY FOR 1470 THRU 2100 RPM. ENGINES JW6H-UFAD80, AA80 USE (SC81A@1760RPM) (CDS50-SC@2100RPM)
7. C0S50-SC only for 1470-2100 RPM SC814 only for 2350-2650 RPM

REV	DESCRIPTION	ECN#	DWN	APVD	DATE
G	ADDED STYLE # 1 BACK TO JX6H ENGINE MODELS	–	DGP	KRW	08AUG11
H	CHANGES TO DIMS B, C, D, & E. ADDED DR & DS ENGINE MODELS, ADDED NEW GUARD KITS	2524	MAL	KRW	21DEC11
J	UPDATED GUARD AND END CAP P/N'S, NOTE 2 REFERENCED C132622, UPDATED NOTES 3-5.	2830	MLL	KRF	09MAY13
K	ADDED NEW ENGINE MODELS	3306	DGP	KRW	16DEC13
L	DIM "C" FOR C101139 WAS 189.5[7.46] IN ERROR	3721	MLL	JCA	17OCT14
M	ADDED ZF6H MODELS	3968	GRM	JCA	5FEB15

THIS DRAWING AND THE INFORMATION HEREON ARE OUR PROPERTY AND MAY BE USED BY OTHERS ONLY AS AUTHORIZED BY US. UNPUBLISHED–ALL RIGHTS RESERVED UNDER THE COPYRIGHT LAWS.

MACHINE TOLERANCES

DECIMAL	mm	Inch
X.X	±1.5	
X.XX	±0.8	±1/32
X.XXX	±0.3	±1/128
X.XXXX	±0.125	±1/1000
X.XXXXX		±1/2000

ANGULAR: ±0.5°

FABRICATION TOLERANCES

DECIMAL	mm	Inch
X.X	±3	
X.XX	±1.5	±1/32
X.XX		±1/64

ANGULAR: ±1.0°

YES NO CONTROLLED DRAWING

CLARKE
Fire Protection Products, Inc.

DRWN	RJTOLLE
DATE	21MAY08
ENGR	KWAULIGMAN
MATERIAL	ALUMINUM
NAME	GUARDING FOR UL LISTED AND NON-LISTED DRIVESHAFTS
PART NO.	D624
REV	M
SIMILAR TO	
USED ON/LAYOUT PART NO.	
UNITS	MM [INCH]
PAGE	1 OF 1

AURORA® FIRE PUMPS

DIESEL ENGINE MUFFLERS

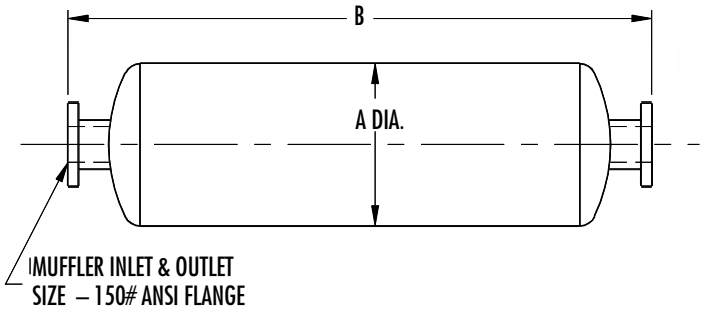

ENGINE MODEL	MUFFLER INLET & OUTLET	COMMERCIAL GRADE			RESIDENTIAL GRADE			CRITICAL GRADE		
		A	B	WGT	A	B	WGT	A	B	WGT
CATERPILLAR										
3406C	6" FLANGED	12	42	35	12	54	43	16	73	131
3412C*, 3508C, C18*	8" FLANGED	18	49	110	18	61	124	20	75	220
CLARKE FIRE PROTECTION										
JU4H-UF10, -UF12, -UF14, -UF20, -UF22, -UF24, -UFAB26, -UFAEA0, -UFAEE8, -UFAEF2, -UFADJ2, -UFADJ8	3" NPT	8	36	19	8	42	21	10	42	42
JU4R-UF09, -UF11, -UF13, -UF19, -UF21, -UF23, -UFAEA9, -UFAEE7, -UFAEF1										
JU4H-UF30, -UF32, -UF34, -UF40, -UF42, -UF 50, -UF52, -UF54, -UF58, -UFADJG, -UFADP0, -UFADR0, -UFADW8, -UFADY8, -UFAD5G	4" FLANGED	10	36	24	10	46	29	12	55	68
JU4R-UF40, -UF49, UF51 -UF53										
JU6H-UF30, -UF32, -UF34, -UF 50, -UF52, -UF54, -UF58, -UF60, -UF62, -UF62, -UF68, -UF84, -UFAAPG, -UFAAQ8, -UFAARG, -UFAAS0,-UFAB76, -UFABL0, -UFABL8, -UFD0, -UFD2, -UFG8, -UFM0, -UFM2, -UFM8, -UFAD58, -UFAD88, -UFADM0, -UFADM8, -UFADN0, -UFADNG, -UFADP8	5" FLANGED	10	42	27	10	54	34	14	61	92
DP6H SERIES										
JW6H-UF30, -UF40, UF48										
DS0H SERIES*	5" FLANGED	10	42	27	10	54	34	14	61	92
DR8H SERIES*										
JW6H-UF50, -UF58, -UF60, -UF8, -UFAAM8, -UFAA80, -UFADD0, -UFADB0, -UFADF0, -UFADJ0, -FAD70, -UFAD80	6" FLANGED	12	42	35	12	54	43	16	73	131
JU6H-UFAD98, -UFADP0, -UFADQ0, -UFADR0, -UFADR8, -UFADS0, -UFADS8, -FADT0, -UFADW8 -UFADX8										
DQ6H SERIES										
DT2H SERIES*										
JX6H SERIES	8" FLANGED	18	49	110	18	61	124	20	75	220
CUMMINS										
CFP5E, CFP59, CFP7E Series	4" NPT, FLANGED	10	36	24	10	46	29	12	55	68
CFP83 Series	4" NPT, FLANGED	10	36	24	10	46	29	12	55	68
CFP9E Series	5" NPT, FLANGED	10	42	27	10	54	34	14	61	92
CFP11E Series	5" NPT, FLANGED	10	42	27	10	54	34	14	61	92
CFP15E Series	6" FLANGED	12	42	35	12	54	43	16	73	131
CFP23E Series	8" NPT, FLANGED	18	49	110	18	61	124	20	75	220
CFP30E Series	10" NPT, FLANGED	22	64	205	22	75	220	28	99	360
DEUTZ										
DFP4-2011 Series	3" NPT	8	36	19	8	42	21	10	42	42
DFP4-2012 Series	4" FLANGED	10	36	24	10	46	29	12	55	68
DFP6 Series	6" FLANGED	12	42	35	12	54	43	16	73	131

CLARKE

www.clarkefire.com **Fire Protection Products**

JU6H-UFADX8

FIRE PUMP DRIVER

NOISE DATA

Mechanical Engine Noise *

RPM	BHP	OVERALL dB(A)	Octave Band 31.5 Hz dB(A)	63 Hz dB(A)	125 Hz dB(A)	250 Hz dB(A)	500 Hz dB(A)	1k Hz dB(A)	2k Hz dB(A)	4k Hz dB(A)	8k Hz dB(A)	16k Hz dB(A)
1760	305	109.2	67.0	69.2	82.6	89.2	97.1	99.7	104.9	103.4	101.7	101.7

Raw Exhaust Engine Noise **

RPM	BHP	OVERALL dB(A)	Octave Band 31.5 Hz dB(A)	63 Hz dB(A)	125 Hz dB(A)	250 Hz dB(A)	500 Hz dB(A)	1k Hz dB(A)	2k Hz dB(A)	4k Hz dB(A)	8k Hz dB(A)	16k Hz dB(A)
1760	305	112.1		101.8	106.2	100.9	103.1	102.7	105.4	102.6	92.3	85.9

** Values above are provided at 3.3ft (1m) from engine block and do not include the raw exhaust noise.*

*** Values above are provided at 23ft (7m), 90 ° horizontal, from a vertical exhaust outlet and does not include noise created mechanically by the engine.*

The above data reflects values for a typical engine of this model, speed and power in a free-field environment.

Installation specifics such as background noise level and amplification of noise levels from reflecting off of surrounding objects, will affect the overall noise levels observed. As a result of this, Clarke makes no guarantees to the above levels in an actual installation.

FORM

TITLE:	SUPPLIER DOCUMENT FRONT SHEET	DOC. NO.:	D01-0005-001 Rev 0
PROJECT NAME:	Rainy River Project	PROJECT NO.:	

National Process	100126-PJ040	Fire Pump Package
Company Name	*PO/Contract Number*	*Package/Contract Description*

Catalogue Data/ Cut Sheet (Diesel Engine)
Document Title

14	6-Nov-15	Nabil Francis	Nabil Francis
Total Number of Pages (Including Front Sheet)	*Submission Date*	*Submitted By - Print Name*	*Supplier Approval - Signature*

Equipment Tag Number(s) 2530-PU-1002-MO

Secondary SDDRL Code(s)

7107233D11-5	00	100126-PJ040-D01-0005.001	1
Supplier/Contractor Document Number	*Supplier Rev.*	*AMEC Project Document No.*	*AMEC Issue No.*

Note: This FRONT SHEET is to be used for all non-drawing documents and if the drawing does not have sufficient space for an electronic decal.

SUPPLIER REVIEW

1 **REVIEWED AND ACCEPTED WITH NO COMMENT.**

PERMISSION TO PROCEED DOES NOT CONSTITUTE ACCEPTANCE OF DESIGN, CALCULATIONS, TEST METHODS OR MATERIAL DEVELOPED OR SELECTED BY SELLER AND DOES NOT RELIEVE SELLER FROM FULL COMPLIANCE WITH CONTRACTUAL OR OTHER OBLIGATIONS.

Fischer, Zach
01:59 PM, 18/11/2015

veloped or selected by
ons.

OF COMMENTS

CLARKE®

FIRE PUMP ENGINES

MODELS

JU6H-UFADMG	JU6H-UFADP0	JU6H-UFADR0	JU6H-UFADT0
JU6H-UFAD58	JU6H-UFADP8	JU6H-UFADR8	JU6H-UFADW8
JU6H-UFADNG	JU6H-UFADQ0	JU6H-UFADS8	JU6H-UFADX8
JU6H-UFADN0	JU6H-UFAD88	JU6H-UFADS0	JU6H-UFAD98

2530-PU-1002-MO

FM-UL-cUL APPROVED RATINGS BHP/*KW*

JU6H MODEL ♦	RATED SPEED 1760		2100		2350		2400		US-EPA (NSPS) Available Until ●
UFADMG			175	*131*	175	*131*			*No Expiration*
UFAD58	183	*137*							*No Expiration*
UFADNG	190	*142*	181	*135*	183	*137*	183	*137*	*No Expiration*
UFADN0	197	*147*	197	*147*	200	*149*	200	*149*	*No Expiration*
UFADP0			209	*156*	211	*157*	211	*157*	*No Expiration*
UFADP8	220	*164*							*No Expiration*
UFADQ0			224	*167*	226	*169*	226	*169*	*No Expiration*
UFAD88	237	*177*							*No Expiration*
UFADR0			238	*177.5*	240	*179*	240	*179*	*No Expiration*
UFADR8	250	*187*							*No Expiration*
UFADS8	260	*194*							*No Expiration*
UFADS0			260	*194*	268	*200*	268	*200*	*No Expiration*
UFADT0			274	*204*	275	*205*	275	*205*	*No Expiration*
UFADW8	282	*211*							*No Expiration*
UFADX8	305	*227.5*							*No Expiration*
UFAD98	315	*235*							*No Expiration*

Picture represents JU6H-TRWA Power Tech Plus Engine Series

● USA EPA (NSPS) Tier 3 Emissions Certified Off-Road (40 CFR Part 89) and NSPS Stationary (40 CFR Part 60 Sub Part IIII). Meet EU Stage IIIA emission levels.

♦ All Models available for Export

SPECIFICATIONS

ITEM	JU6H MODELS MG	58	NG	N0	P8	88	P0	Q0	R0	S0	T0	R8	S8	W8	X8	98
Number of Cylinders	6															
Aspiration	TRWA															
Rotation*	CW															
Overall Dimensions – in. (mm)	45.8 (1163) H x 56.7 (1414) L x 36.7 (933) W						46.9 (1191) H x 58.6 (1488) L x 40.0 (1015) W									
Crankshaft Centerline Height – in. (mm)	14 (356)															
Weight – lb (kg)	1747 (791)															
Compression Ratio	19.0:1						17.0:1									
Displacement – cu. in. (L)	415 (6.8)															
Engine Type	4 Stroke Cycle – Inline Construction															
Bore & Stroke – in. (mm)	4.19 x 5.00 (106 x 127)															
Installation Drawing	D628															
Wiring Diagram AC	C07651															
Wiring Diagram DC	C071367, C072146, C071361						C071368, C072146, C071761									
Engine Series	John Deere 6068 Series Power Tech E						John Deere 6068 Series Power Tech Plus									
Speed Interpolation	N/A															

Abbreviations: CW – Clockwise TRWA – Turbocharged with Raw Water Aftercooling N/A - Not Available L – Length W – Width H - Height

*Rotation viewed from Heat Exchanger / Front of engine

CERTIFIED POWER RATING

- Each engine is factory tested to verify power and performance.
- FM-UL power ratings are shown at specific speeds, Clarke engines can be applied at a single rated RPM setting ± 50 RPM.

ENGINE RATINGS BASELINES

- Engines are to be used for stationary emergency standby fire pump service only. Engines are to be tested in accordance with NFPA 25.
- Engines are rated at standard SAE conditions of 29.61 in. (752.1 mm) Hg barometer and 77°F (25°C) inlet air temperature [approximates 300 ft. (91.4 m) above sea level] by the testing laboratory (see SAE Standard J 1349).
- A deduction of 3 percent from engine horsepower rating at standard SAE conditions shall be made for diesel engines for each 1000 ft. (305 m) altitude above 300 ft. (91.4 m)
- A deduction of 1 percent from engine horsepower rating as corrected to standard SAE conditions shall be made for diesel engines for every 10°F (5.6°C) above 77°F (25°C) ambient temperature.

CLARKE®

FIRE PUMP ENGINES

MODELS

JU6H-UFADMG	JU6H-UFADP0	JU6H-UFADR0	JU6H-UFADT0
JU6H-UFAD58	JU6H-UFADP8	JU6H-UFADR8	JU6H-UFADW8
JU6H-UFADNG	JU6H-UFADQ0	JU6H-UFADS8	JU6H-UFADX8
JU6H-UFADN0	JU6H-UFAD88	JU6H-UFADS0	JU6H-UFAD98

ENGINE EQUIPMENT

EQUIPMENT	STANDARD	OPTIONAL
Air Cleaner	Direct Mounted, Washable, Indoor Service with Drip Shield	Disposable, Drip Proof, Indoor Service Outdoor Type, Single or Two Stage (Cyclonic)
Alarms	Overspeed Alarm & Shutdown, Low Oil Pressure, Low & High Coolant Temperature, Low Raw Water Flow, High Raw Water Temperature, Alternate ECM Warning, Fuel Injection Malfunction, ECM Warning and Failure with Automatic Switching	Low Coolant Level, Low Oil Level, Oil Filter Differential Pressure, Fuel Filter Differential Pressure, Air Filter Restriction
Alternator	12V-DC, 42 Amps with Poly-Vee Belt and Guard	24V-DC, 40 Amps with Poly-Vee Belt and Guard
Coupling	Bare Flywheel	UL Listed Driveshaft and Guard, JU6H-UFAD58/NG/ADMG/ADM8/K0/N0/Q0/R0-CDS30-S1; JU6H-UFADP8/P0/T0/88/R8/S8/S0/W8/X8/98 - CDS50-SC at 1760/2100 RPM only
Electronic Control Module	12V-DC, Energized to Stop, Primary ECM always Powered on	24V-DC, Energized to Stop, Primary ECM always Powered on
Engine Heater	115V-AC, 1360 Watt	230V-AC, 1360 Watt
Exhaust Flex Connection	SS Flex, 150# ANSI Flanged Connection, 5" for JU6H-UFAD58/MG/NG/N0/P8/88; SS Flex, 150# ANSI Flanged Connection, 6" for JU6H-UFADP0/Q0/R0/S0/T0/R8/S8/W8/X8/98 (w/ orifice plate)	SS Flex, 150# ANSI Flanged Connection, 6" for JU6H-UFAD58/MG/NG/N0/P8/88; SS Flex, 150# ANSI Flanged Connection, 8" for JU6H-UFADP0/Q0/R0/S0/T0/R8/S8/W8/X8/98 (w/ orifice plate)
Exhaust Protection	Metal Guards on Manifolds and Turbocharger	
Flywheel Housing	SAE #3	
Flywheel Power Take Off	11.5" SAE Industrial Flywheel Connection	
Fuel Connections	Fire Resistant, Flexible, USA Coast Guard Approved, Supply and Return Lines	SS, Braided, cUL Listed, Supply and Return Lines
Fuel Filter	Primary Filter with Priming Pump	
Fuel Injection System	High Pressure Common Rail	
Governor, Speed	Dual Electronic Control Modules	
Heat Exchanger	Tube and Shell Type, 60 PSI (4 BAR), NPT(F) Connections – Sea Water Compatible	
Instrument Panel	Multimeter to Display English and Metric, Tachometer, Hourmeter, Water Temperature, Oil Pressure and One (1) Voltmeter with Toggle Switch, Front Opening	
Junction Box	Integral with Instrument Panel; For DC Wiring Interconnection to Engine Controller	
Lube Oil Cooler	Engine Water Cooled, Plate Type	
Lube Oil Filter	Full Flow with By-Pass Valve	
Lube Oil Pump	Gear Driven, Gear Type	
Manual Start Control	On Instrument Panel with Control Position Warning Light	
Overspeed Control	Electronic, Factory Set, Not Field Adjustable	
Raw Water Cooling Loop w/Alarms	Galvanized	Seawater, All 316SS, High Pressure
Raw Water Cooling Loop Solenoid Operation	Automatic from Fire Pump Controller and from Engine Instrument Panel (for Horizontal Fire Pump Applications)	Not Supplied (for Vertical Turbine Fire Pump Applications)
Run – Stop Control	On Instrument Panel with Control Position Warning Light	
Starters	Two (2) 12V-DC	Two (2) 24V-DC
Throttle Control	Adjustable Speed Control by Increase/Decrease Button, Tamper Proof in Instrument Panel	
Water Pump	Centrifugal Type, Poly-Vee Belt Drive with Guard	

Abbreviations: DC – Direct Current, AC – Alternating Current, SAE – Society of Automotive Engineers, NPT(F) – National Pipe Tapered Thread (Female), ANSI – American National Standards Institute, SS – Stainless Steel

MODEL NOMENCLATURE: (10 Digit Models)

JU6H - UFADR0

- John Deere Base Engine
- 350 Series
- 6 Cylinders
- Heat Exchanger Cooled
- UL Listed
- FM Approved
- Built in USA
- EPA Tier 3 Certified
- Power Curve Number

CLARKE®

CLARKE Fire Protection Products, Inc.
100 Progress Place, Cincinnati, Ohio 45246
United States of America
Tel +1-513-475-FIRE(3473) Fax +1-513-771-8930
www.clarkefire.com

CLARKE UK, Ltd.
Grange Works, Lomond Rd., Coatbridge, ML5-2NN
United Kingdom
Tel +44-1236-429946 Fax +44-1236-427274
www.clarkefire.com

C133421 revQ
13APR15

Specifications and information contained in this brochure subject to change without notice.

AURORA® 481 PUMPS

SINGLE-STAGE FIRE PUMPS
CLARKE DIESEL ENGINE DRIVE
JU6H-UFAD-K0, M8, MG, 58, NG, N0, P8, P0, Q0, R0, S0, T0, 88, R8, S8, W8, X8, 98
EPA NSPS TIER 3 CERTIFIED

⚠ WARNING

DO NOT OPERATE THIS MACHINE WITHOUT PROTECTIVE GUARD IN PLACE. ANY OPERATION OF THIS MACHINE WITHOUT PROTECTIVE GUARD CAN RESULT IN SEVERE BODILY INJURY.

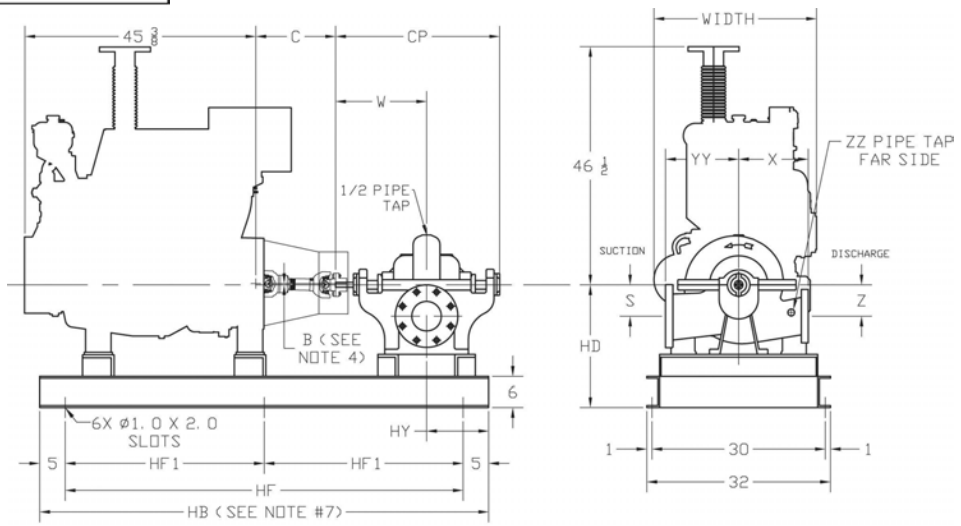

ENGINE MODEL: JU6H-UFAD__	C	UL LISTED DRIVESHAFT*	B DRIVESHAFT OFFSET DIMENSION
K0*, M8, MG, 58, NG, N0, Q0, R0	15 -5/8	CDS30-S1	0.35
P8,P0,S0,T0,88,R8,S8,W8,X8,98	20 -3/8	CDS50-SC (1760 & 2100 RPM)	0.45
*For engines with speeds of 1760 & 2100 RPM only. For 2350 RPM use a non-listed driveshaft.			

ENGINE MODEL: JU6H-UFAD__	C	NON-LISTED DRIVESHAFT**	B DRIVESHAFT OFFSET DIMENSION
T0, S0, P0, R0	20 -3/8	SC81A (2350 RPM)	0.45
**For engines with speeds of 2350 RPM only. There is no listed driveshaft available in this HP range.			

PUMP SIZE			SUCTION	POWER SERIES	S	W	X	Z	CP	YY	ZZ	HB	HD	HF	HF1	HY
DISCH	MODEL	CASE BORE														
5	481	17	6	4	6-1/4	16	14	5-1/4	28-1/2	15	1-1/4	88	20	78	39	14
6	481	11HH	8	4A	8-5/8	18-1/8	10	8-5/8	32-7/8	15	1-1/4	88	23	78	39	11-7/8
6	481	14HH	8	5A	7-1/2	20-1/2	15	7-1/2	36-3/4	17	1-1/4	98	23	88	44	19-9/16
6	481	15	8	5	6-3/4	18	14-1/4	6-3/4	32	16-3/4	1-1/4	88	21	78	39	12
6	481	18	8	5	8	18	16	8	32	18	1-1/4	88	22	78	39	12
6	481	20	8	5	8	18	15-3/4	8	32	18	1-1/4	88	22	78	39	12
8	481	17B	10	5	8	18	17	8	32	17-3/4	2	88	24	78	39	12
8	481	21	10	6B	9-1/2	21-7/8	18	9-1/2	38	21	2	98	25	88	44	18-1/8
10	481	15	12	6B	13-1/2	21-7/8	17	13-1/2	38	20	1-1/4	98	31	88	44	13-1/8
10	481	18	12	6B	13-1/2	21-7/8	17	13-1/2	38	22	2	98	31	88	44	13-1/8
10	481	18D	12	7A	12-1/4	24-1/4	20	12-1/4	43	24	2	98	31	88	44	15.69

NOTES:
1. All dimensions are in inches and may vary ±3/8".
2. Not for construction purposes, unless certified.
3. Caution: The driveshaft is designed to operate at a 2° angle with the input and output shafts in parallel. The engine crankshaft is to be set with a parallel offset of "B" ± 0.10 inches vertically above the pump shaft and 0.00" ± 0.10 inch parallel offset horizontally right or left of the pump shaft. Refer to the Certified Driveshaft Instructions Manual for alignment instructions.
4. Pump suction and discharge flanges are ANSI Standard flat face.
5. Left-hand (counterclockwise) rotation is not available.
6. Optional: base mounted controller (not shown) add 25" to "HB" (length of base) and 2 additional ø1.00 x 2.00 slots.

© 2013 Pentair Ltd.

CLARKE
Fire Protection Products, Inc.

JU6H-UFADX8
INSTALLATION & OPERATION DATA (I&O Data)
USA Produced

Basic Engine Description

Engine Manufacturer	John Deere Co.
Ignition Type	Compression (Diesel)
Number of Cylinders	6
Bore and Stroke - in (mm)	4.19 (106) X 5 (127)
Displacement - in³ (L)	415 (6.8)
Compression Ratio	17.0:1
Valves per cylinder	
Intake	2
Exhaust	2
Combustion System	Direct Injection
Engine Type	In-Line, 4 Stroke Cycle
Fuel Management Control	Electronic, High Pressure Common Rail
Firing Order (CW Rotation)	1-5-3-6-2-4
Aspiration	Turbocharged
Charge Air Cooling Type	Raw Water
Rotation, viewed from front of engine, Clockwise (CW)	Standard
Engine Crankcase Vent System	Open
Installation Drawing	D628
Weight - lb (kg)	1747 (792)

Power Rating	**1760**
Nameplate Power - HP (kW)	305 (227.5)

Cooling System - [C051386]	**1760**
Engine Coolant Heat - Btu/sec (kW)	143 (151)
Engine Radiated Heat - Btu/sec (kW)	69 (72.8)
Heat Exchanger Minimum Flow	
60°F (15°C) Raw H_20 - gal/min (L/min)	28 (106)
100°F (37°C) Raw H_20 - gal/min (L/min)	38 (144)
Heat Exchanger Maximum Cooling Raw Water	
Inlet Pressure - psi (bar)	60 (4.1)
Flow - gal/min (L/min)	40 (151)
Typical Engine H_20 Operating Temp - °F (°C)[1]	180 (82.2) - 195 (90.6)
Thermostat	
Start to Open - °F (°C)	180 (82.2)
Fully Opened - °F (°C)	203 (95)
Engine Coolant Capacity - qt (L)	22.2 (21)
Coolant Pressure Cap - lb/in² (kPa)	15 (103)
Maximum Engine Coolant Temperature - °F (°C)	230 (110)
Minimum Engine Coolant Temperature - °F (°C)	160 (71.1)
High Coolant Temp Alarm Switch - °F (°C)[2]	235 (113) - 241 (116)

Electric System - DC	**Standard**		**Optional**	
System Voltage (Nominal)	12		24	
Battery Capacity for Ambients Above 32°F (0°C)				
Voltage (Nominal)	12	[C07633]	24	[C07633]
Qty. Per Battery Bank	1		2	
SAE size per J537	8D		8D	
CCA @ 0°F (-18°C)	1400		1400	
Reserve Capacity - Minutes	430		430	
Battery Cable Circuit, Max Resistance - ohm	0.0012		0.0012	
Battery Cable Minimum Size				
0-120 in. Circuit Length[3]	00		00	
121-160 in. Circuit Length[3]	000		000	
161-200 in. Circuit Length[3]	0000		0000	
Charging Alternator Maximum Output - Amp,	40	[C071363]	55	[C071365]
Starter Cranking Amps, Rolling - @60°F (15°C)	440	[RE69704/RE70404]	250	[C07819/C07820]

NOTE: This engine is intended for indoor installation or in a weatherproof enclosure. [1]Engine H_2O temperature is dependent on raw water temperature and flow. [2]High Coolant Switch threshold varies with engine load. [3]Positive and Negative Cables Combined Length.

CLARKE
Fire Protection Products, Inc.

JU6H-UFADX8
INSTALLATION & OPERATION DATA (I&O Data)
USA Produced

Exhaust System	**1760**
Exhaust Flow - ft.³/min (m³/min)	1400 (39.6)
Exhaust Temperature - °F (°C)	961 (516)
Maximum Allowable Back Pressure - in H_20 (kPa)	30 (7.5)
Minimum Exhaust Pipe Dia. - in (mm)[4]	6 (152)

Fuel System	**1760**
Fuel Consumption - gal/hr (L/hr)	14.6 (55.3)
Fuel Return - gal/hr (L/hr)	21.3 (80.6)
Fuel Supply - gal/hr (L/hr)	35.9 (136)
Fuel Pressure - lb/in² (kPa)	3 (20.7) - 6 (41.4)
Minimum Line Size - Supply - in.	.50 Schedule 40 Steel Pipe
Pipe Outer Diameter - in (mm)	0.848 (21.5)
Minimum Line Size - Return - in.	.375 Schedule 40 Steel Pipe
Pipe Outer Diameter - in (mm)	0.675 (17.1)
Maximum Allowable Fuel Pump Suction Lift with clean Filter - in H_20 (mH_20)	80 (2)
Maximum Allowable Fuel Head above Fuel pump, Supply or Return - ft (m)	6.6 (2)
Fuel Filter Micron Size	2 (Secondary)

Heater System	**Standard**	**Optional**
Engine Coolant Heater		
Wattage (Nominal)	1360	1360
Voltage - AC, 1 Phase	115 (+5% -10%)	230 (+5%, -10%)
Part Number	[C123640]	[C123644]

Air System	**1760**	
Combustion Air Flow - ft.³/min (m³/min)	525 (14.9)	
Air Cleaner	**Standard**	**Optional**
Part Number	[C03244]	[C03327]
Type	Indoor Service Only, with Shield	Canister, Single-Stage
Cleaning method	Washable	Disposable
Air Intake Restriction Maximum Limit		
Dirty Air Cleaner - in H_20 (kPa)	14 (3.5)	14 (3.5)
Clean Air Cleaner - in H_20 (kPa)	7 (1.7)	5 (1.2)
Maximum Allowable Temperature (Air To Engine Inlet) - °F (°C) [5]	130 (54.4)	

Lubrication System	
Oil Pressure - normal - lb/in² (kPa)	40 (276) - 60 (414)
Low Oil Pressure Alarm Switch - lb/in² (kPa) [6]	30 (207) to 35 (241)
In Pan Oil Temperature - °F (°C)	220 (104) - 245 (118)
Total Oil Capacity with Filter - qt (L)	34.3 (32.5)

Lube Oil Heater	**Optional**	**Optional**
Wattage (Nominal)	150	150
Voltage	120V (+5%, -10%)	240V (+5%, -10%)
Part Number	C04430	C04431

Performance	**1760**
BMEP - lb/in² (kPa)	331 (2280)
Piston Speed - ft/min (m/min)	1467 (447)
Mechanical Noise - dB(A) @ 1m	C133380
Power Curve	C132969

[4]Based on Nominal System. Back pressure flow analysis must be done to assure maximum allowable back pressure is not exceeded. (Note: minimum exhaust Pipe diameter is based on: 15 feet of pipe, one 90° elbow, and a silencer pressure drop no greater than one half of the maximum allowable back pressure.) [5]Review for horsepower derate if ambient air entering engine exceeds 77°F (25°C). [6]Low Oil Pressure Switch threshold varies w/engine speed. [ ] indicates component reference part number.

JU4H, JU4R & JU6H, JU6R ENGINE MODELS
ENGINE MATERIALS AND CONSTRUCTION

Air Cleaner
Type…… Indoor Usage Only
Oiled Fabric Pleats
Material…… Surgical Cotton
Aluminum Mesh

Air Cleaner - Optional
Type…… Canister
Material…… Pleated Paper
Housing…… Enclosed

Camshaft
Material…… Cast Iron
Chill Hardened
Location…… In Block
Drive…… Gear, Spur
Type of Cam…… Ground

Charge Air Cooler (JU6H-60,62,68,74,84, ADK0, AD58, ADNG, ADN0, ADQ0, ADR0, AAQ8, AARG, ADP8, ADP0, ADT0, AD88, ADR8, AD98, ADS0, ADW8, ADX8, AD98 only)
Type…… Raw Water Cooled
Materials (in contact with raw water)
Tubes…… 90/10 CU/NI
Headers …… 36500 Muntz
Covers …… 83600 Red Brass
Plumbing …… 316 Stainless Steel/ Brass
90/10 Silicone

Charge Air Cooler (JU6R-AA67, 59, 61, PF, Q7, RF, S9, 83 only)
Type…… Air to Air Cooled
Materials
Core…… Aluminum

Coolant Pump
Type…… Centrifugal
Drive…… Poly Vee Belt

Coolant Thermostat
Type…… Non Blocking
Qty…… 1

Cooling Loop (Galvanized)
Tees, Elbows, Pipe…… Galvanized Steel
Ball Valves…… Brass ASTM B 124,
Solenoid Valve…… Brass
Pressure Regulator…… Bronze
Strainer…… Cast Iron (1/2" - 1" loops) or
Bronze (1.25" - 2" loops)

Cooling Loop (Sea Water)
Tees, Elbows, Pipe…… 316 Stainless Steel
Ball Valves…… 316 Stainless Steel
Solenoid Valve…… 316 Stainless Steel
Pressure Regulator/Strainer Cast Brass ASTM B176
C87800

Cooling Loop (316SS)
Tees, Elbows, Pipe…… 316 Stainless Steel
Ball Valves…… 316 Stainless Steel
Solenoid Valve…… 316 Stainless Steel
Pressure Regulator/Strainer 316 Stainless Steel

Connecting Rod
Type…… I-Beam Taper
Material…… Forged Steel Alloy

Crank Pin Bearings
Type…… Precision Half Shell
Number…… 1 Pair Per Cylinder
Material…… Wear-Guard

Crankshaft
Material…… Forged Steel
Type of Balance…… Dynamic

Cylinder Block
Type…… One Piece with
Non-Siamese Cylinders
Material…… Annealed Gray Iron

Cylinder Head
Type…… Slab 2 Valve
Material…… Annealed Gray Iron

Cylinder Liners
Type…… Centrifugal Cast, Wet Liner
Material…… Alloy Iron Plateau, Honed

Fuel Pump
Type…… Diaphragm
Drive…… Cam Lobe

Heat Exchanger (USA) - JU4H & JU6H Only
Type…… Tube & Shell
Materials
Tube & Headers…… Copper
Shell…… Copper
Electrode…… Zinc

Heat Exchanger (UK) - JU4H & JU6H Only
Type…… Tube & Bundle

Materials
Tube & Headers…… Copper
Shell…… Aluminum

Injection Pump
Type…… Rotary
Drive…… Gear

Lubrication Cooler
Type…… Plate

Lubrication Pump
Type…… Gear
Drive…… Gear

Main Bearings
Type…… Precision Half Shells
Material…… Steel Backed-Aluminum
Lined

Piston
Type and Material…… Aluminum Alloy with
Reinforced Top Ring Groove
Cooling…… Oil Jet Spray

Piston Pin
Type…… Full Floating - Offset

Piston Rings
Number/Piston…… 3
Top…… Keystone Barrel Faced -
Plasma Coated
Second…… Tapered Cast Iron
Third…… Double Rail Type
w/Expander Spring

Radiator - JU4R & JU6R Only
Type…… Plate Fin
Materials
Core…… Copper & Brass
Tank & Structure…… Steel

Valves
Type…… Poppet
Arrangement…… Overhead Valve
Number/Cylinder…… 1 intake
1 exhaust
Operating Mechanism…… Mechanical Rocker Arm
Type of Lifter…… Large Head
Valve Seat Insert…… Replaceable

CLARKE

Fire Protection Products, Inc.

FIRE PUMP MODEL: JU6H-UFADX8
Heat Exchanger Cooled
Raw Water Charge Cooling
Tier 3 Emissions Certified

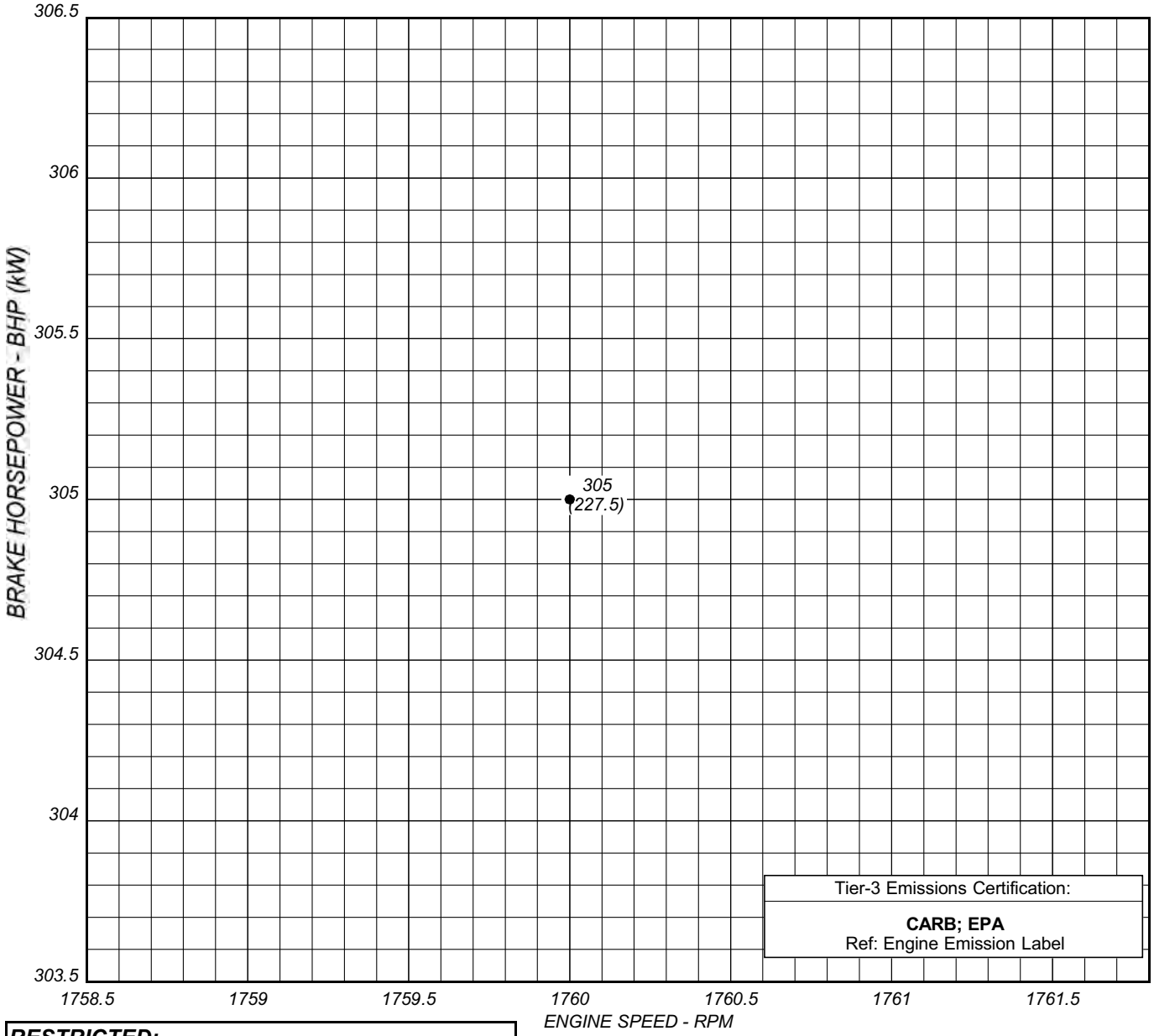

Tier-3 Emissions Certification:

CARB; EPA
Ref: Engine Emission Label

RESTRICTED:
USE ONLY FOR STAND-BY FIRE PUMP APPLICATIONS

ENGINE PERFORMANCE:
STANDARD CONDITIONS: (SAE J1349, ISO 3046)
77°F (25°C) AIR INLET TEMPERATURE
29.61 IN. (751.1MM) HG BAROMETRIC PRESSURE
#2 DIESEL FUEL (SEE C13940)

KEVIN KUNKLER 06FEB09

NAMEPLATE BHP (MAXIMUM PUMP LOAD)

THIS DRAWING AND THE INFORMATION HEREIN ARE OUR PROPERTY AND MAY BE USED BY OTHER ONLY AS AUTHORIZED BY US. UNPUBLISHED -- ALL RIGHTS RESERVED UNDER THE COPYRIGHT LAWS.

CREATED	DATE CREATED
KK	02/06/09

ENGINE MODEL JU6H-UFADX8

DRAWING NO.	REV
C132969	A

DO NOT SCALE

DATUMS:

-A- - MOUNTING FACE OF FLYWHEEL

-B- - ENGINE CRANKSHAFT HORIZONTAL CENTERLINE

-C- - ENGINE CRANKSHAFT VERTICAL CENTERLINE

- CENTER OF GRAVITY OF ENGINE

- CLOCKWISE ROTATION WHEN VIEWED FROM FRONT OF ENGINE

DRAWING SUBJECT TO CHANGE WITHOUT NOTICE

CAUTION:

ALL PLUMBING MUST BE SUPPORTED AND/OR ISOLATED SO THAT NO WEIGHT OR STRESS IS APPLIED TO ANY ENGINE COMPONENT

ATTENTION

REFER TO THE SPECIFIC MODEL "INSTALLATION AND OPERATION DATA" FOR INSTALLATION GUIDELINES

"TRWA" (TURBOCHARGED w/ RAW WATER AFTERCOOLING) MODELS	JU6H-UFAD58, -UFAD88 JU6H-UFADK0, -UFADNG JU6H-UFADP8, -UFADN0 JU6H-UFADM8, -UFADMG JU6H-UFADP8 (MODELS SHOWN)
	JU6H-UFAD98 -UFADP0 JU6H -UFADQ0, -UFADR0 JU6H-UFADR8, -UFADS0 JU6H-UFADS8, -UFADT0 JU6H-UFADW8,-UFADX8

***FOR ENGINES BUILT IN USA BEGINNING DECEMBER 2012**

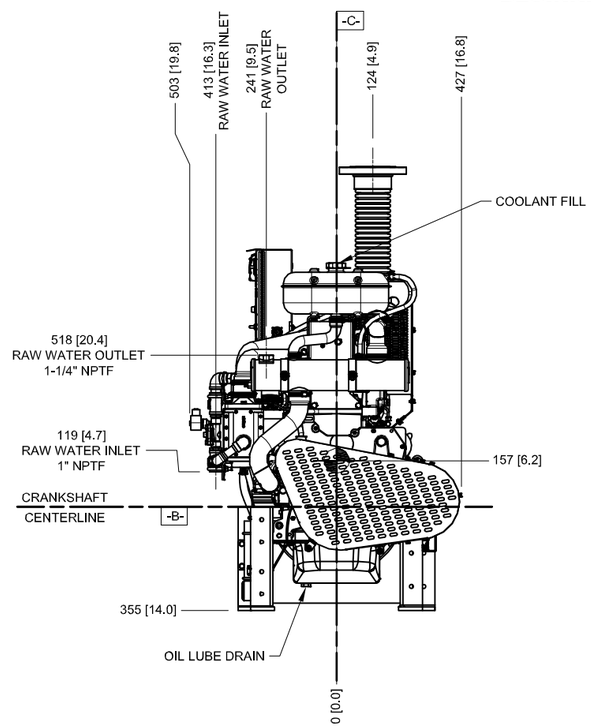

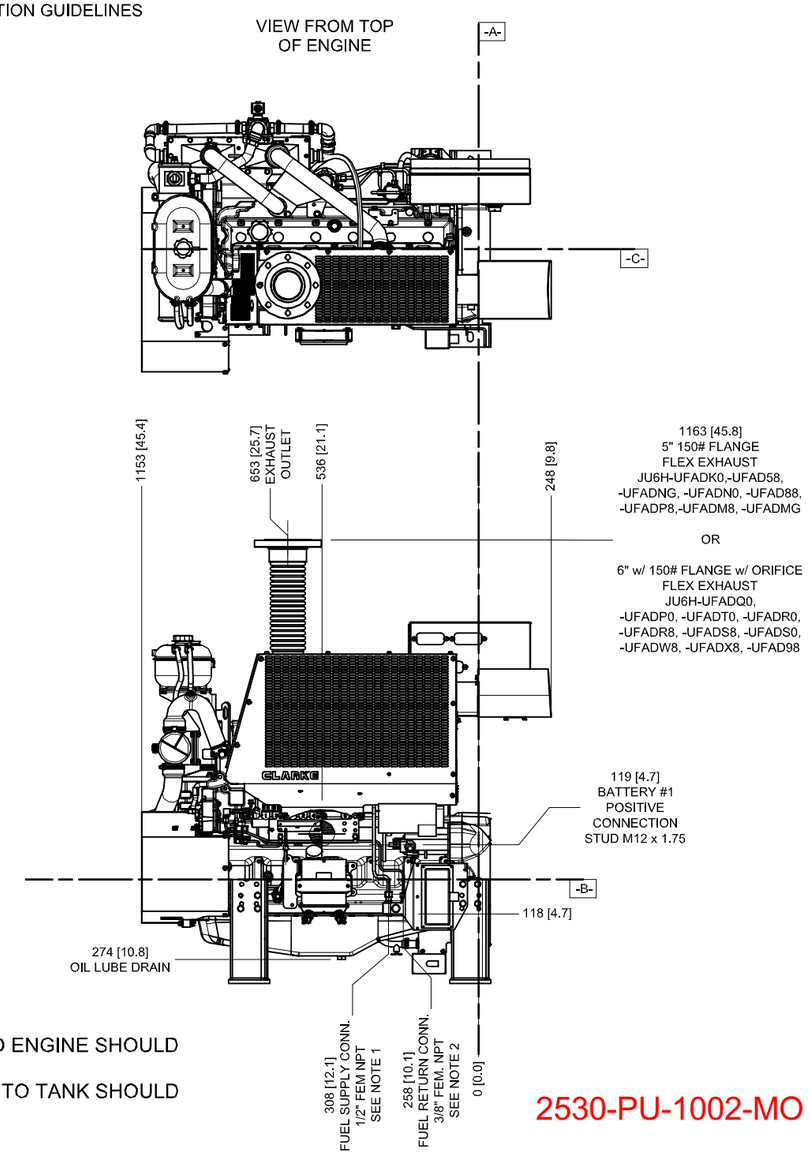

NOTES:
1. FUEL SUPPLY PIPING FROM TANK TO ENGINE SHOULD BE 1/2"MINIMUM PIPE DIAMETER.
2. FUEL RETURN PIPING FROM ENGINE TO TANK SHOULD BE 3/8" MINIMUM PIPE DIAMETER.

2530-PU-1002-MO

REV	DESCRIPTION	ECN#	DWN	APVD	DATE
B	ADDED NEW TIER 3 ENGINE MODELS	1645	KJM	KJE	06JAN09
C	ADDED JU6H-UFADP8 ENGINE MODEL	1645	MAL	KJE	23FEB09
D	REVISED EXH FLEX CONNECTION DATA	1645	DMP	KJE	09NOV09
E	REVISED EXH FLEX CONNECTION DATA	1997	JCA	KJE	23JUN10
F	REVISED ENGINE FOOT MOUNTING HOLE LOCATIONS - PAGE 2	1901	JCA	AMC	28JUL10
G	ADDED DIMENSIONS FRONT VIEW ZONE D6 PG1	2106	DMP	KJE	28OCT10
H	ADDED ENGINE MODELS: JU6H-UFADM8 & JU6H-UFADMG	2173	JCA	KJE	09DEC10
J	UPDATED MOUNTING FEET AND HEATER SETUP	2063	AMC	MOD	19JUL12
K	RAW WATER OUTLET WAS 1" NPTF	2649	MOH	KJE	04DEC12

THIS DRAWING AND THE INFORMATION HEREON ARE OUR PROPERTY AND MAY BE USED BY OTHERS ONLY AS AUTHORIZED BY US. UNPUBLISHED--ALL RIGHTS RESERVED UNDER THE COPYRIGHT LAWS.

MACHINE TOLERANCE

DECIMAL	mm	Inch
X.	± 1.5	
X.X	± 0.8	± 0.06
X.XX	± 0.3	± 0.03
X.XXX	± 0.025	± 0.01
X.XXXX		± 0.001

ANGULAR: ± 0.5°

FABRICATION TOLERANCE

DECIMAL	mm	Inch
X.	± 3	
X.X	± 1.5	± 0.12
X.XX		± 0.06

ANGULAR: ± 1.0°

YES / NO CONTROLLED DRAWING

CLARKE
Fire Protection Products, Inc.

DRWN: MWLEMING
DATE: 2/25/2009
ENGR: KJKUNKLER
MATERIAL
ASSEMBLY

NAME: INSTALLATION DRAWING, FIRE PUMP ENGINE JU6H TIER 3 MODELS

PART NO.: D628 REV: K

SCALE: NTS UNITS: MM [INCH] PAGE 1 OF 2

DO NOT SCALE

FOR ENGINE SPECIFIC OPTIONS
SEE www.CLARKEFIRE.com

DETAIL DATUM -A-
BARE FLYWHEEL

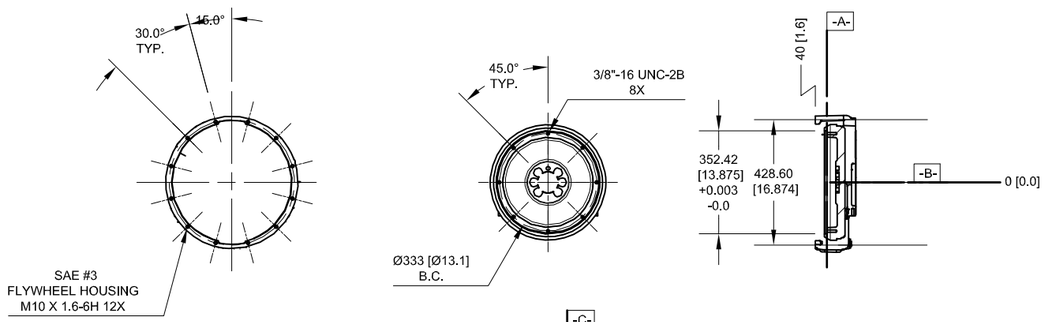

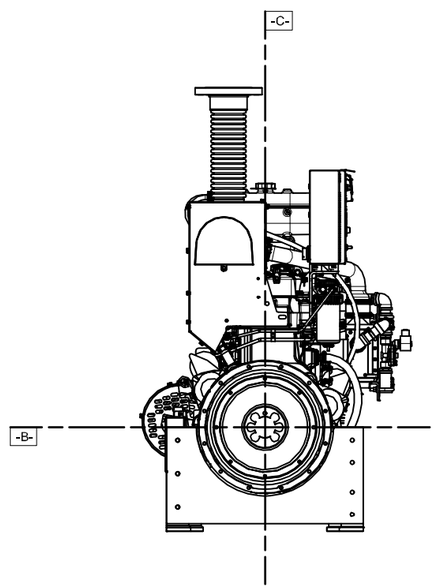

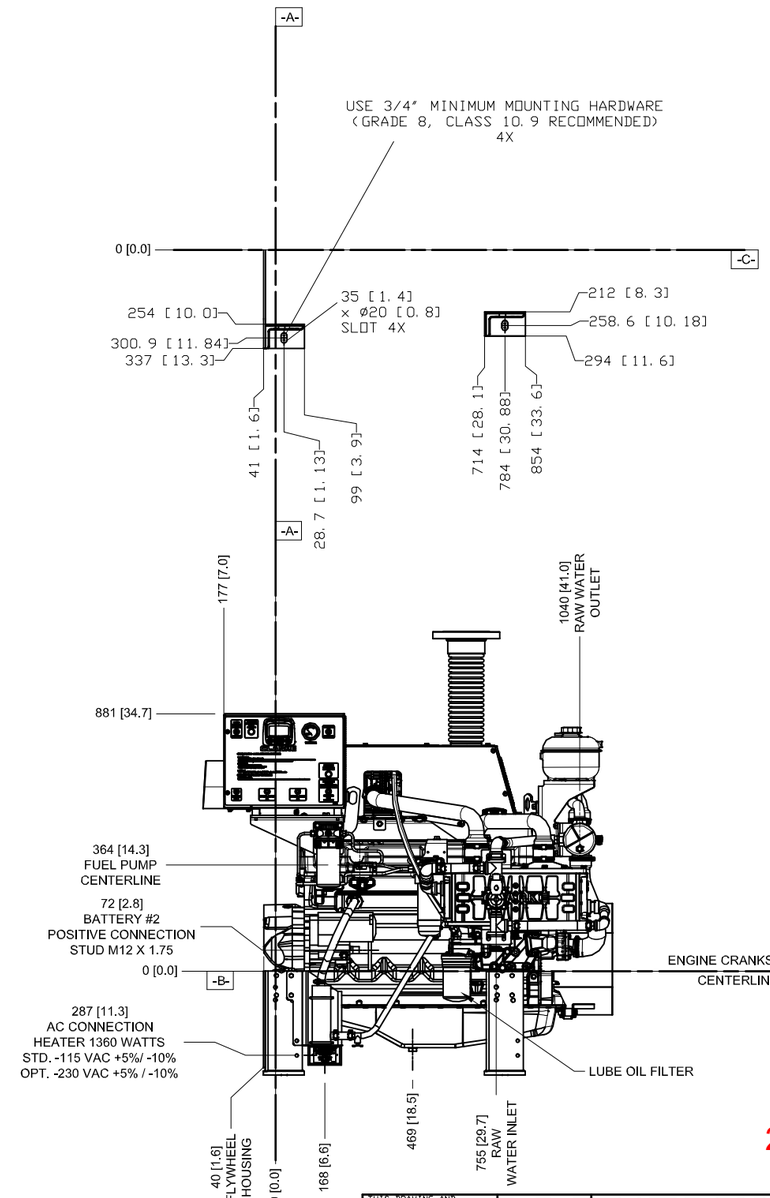

2530-PU-1002-MO

***FOR ENGINES BUILT IN USA**
BEGINNING DECEMBER 2012

DRAWING SUBJECT
TO CHANGE
WITHOUT NOTICE

THIS DRAWING AND THE INFORMATION HEREON ARE OUR PROPERTY AND MAY BE USED BY OTHERS ONLY AS AUTHORIZED BY US. UNPUBLISHED--ALL RIGHTS RESERVED UNDER THE COPYRIGHT LAWS.

MACHINE TOLERANCES

DECIMAL	mm	inch
X.	±1.5	
X.X	±0.8	±0.06
X.XX	±0.3	±0.03
X.XXX	±0.025	±0.01
X.XXXX		±0.001

ANGULAR: ±0.5°

FABRICATION TOLERANCES

DECIMAL	mm	inch
X.	±3	
X.X	±1.5	±0.12
X.XX		±0.06

ANGULAR: ±1.0°

CONTROLLED DRAWING: YES ☒ NO ☐

CLARKE
Fire Protection Products, Inc.

DRWN	MWLEMING
DATE	2/25/2009
ENGR	KKUNKLER
MATERIAL	
ASSEMBLY	
NAME	INSTALLATION DRAWING, FIRE PUMP ENGINE JU6H TIER 3 MODELS
PART NO.	D628
REV	K
SCALE	NTS
UNITS	MM [INCH]
PAGE	2 OF 2

LISTED AND NON-LISTED DRIVESHAFT

Short Coupled (Standard Lengths) Fire Pump Driveshafts for Clarke Engine Models

Engine Model	Driveshaft Model	SAE Flywheel Size	SAE Flywheel Housing Size	Companion Flange Series
JU4H-UFAEA0	CDS10-SC (See Note 10)	11.5	3	CF10
JU4H-UF10				
JU4H-UF12				
JU4H-UF14				
JU4H-UF20				
JU4H-UF22				
JU4H-UF24				
JU4H-UFAB26				
JU4R-UFAEA9				
JU4R-UF09				
JU4R-UF11				
JU4R-UF13				
JU4R-UF19				
JU4R-UF21				
JU4R-UF23				
JU4H-UFAEB	CDS20-SC (See Note 10)	11.5	3	CF20
JU4H-UFAEF2				
JU4H-UF30				
JU4H-UF32				
JU4H-UF34				
JU4H-UF40				
JU4H-UF42				
JU4H-UFH0				
JU4H-UFH2				
JU4H-UFH8				
JU4H-UFADJ8				
JU4H-UFADJ2				
JU4R-UF40				
JU4R-UFAEE7				
JU4R-UFAEF1				
JU6H-UF30	CDS20-S1 (See Note 10)	11.5	3	CF20
JU6H-UF32				
JU6H-UF34				
JU6H-UFD0				
JU6H-UFD2				
JU6R-UFAAD9				
JU6R-UFAAD1				
JU6R-UFAA29				
JU6R-UFAA31				
JU6R-UFAA33				

Engine Model	Driveshaft Model	SAE Flywheel Size	SAE Flywheel Housing Size	Companion Flange Series
JU4H-UF50	CDS30-S1 (See Note 10)	11.5	3	CF30
JU4H-UF52				
JU4H-UF54				
JU4H-UF58				
JU4H-UFAD5G				
JU4H-UFADJG				
JU4H-UFADP0				
JU4H-UFADR0				
JU4H-UFADW8				
JU4H-UFADY8				
JU4R-UF49				
JU4R-UF51				
JU4R-UF53				
JU6H-UF50				
JU6H-UF52				
JU6H-UF54				
JU6H-UF58				
JU6H-UF60				
JU6H-UF62				
JU6H-UF68				
JU6H-UF84				
JU6H-UFM0				
JU6H-UFM2				
JU6H-UFM8				
JU6H-UFG8				
JU6H-UFABL0				
JU6H-UFABL2				
JU6H-UFABL8				
JU6H-UFAD58				
JU6R-UFAAG7				
JU6R-UFAAL7				
JU6R-UFAAL9				
JU6R-UFAAL1				
JU6R-UFAAM7				
JU6R-UFAAM9				
JU6R-UFAAM1				
JU6R-UFAAS7				
JU6R-UFAAS9				
JU6R-UFAAS1				
JU6R-UFAAS3				
JU6R-UFAA67				
JU6R-UFAA59				
JU6R-UFAA61				
JU6R-UFAA83				
JU6H-UFADM8				
JU6H-UFADMG				
JU6H-UFADNG				
JU6H-UFAB76				
JU6H-UFADK0				
JU6H-UFADN0				
JU6H-UFADQ0				
JU6H-UFADR0				

Engine Model	Driveshaft Model		SAE Flywheel Size	SAE Flywheel Housing Size	Companion Flange Series
JU4H-UFAD98		N/A	11.5	3	CF50
JU6H-UFAAQ8					
ZF6H-UFAC60					
JU6H-UFAAPG					
JU6H-UFAARG					
JU6H-UFADP8					
JU6H-UFADP0					
JU6H-UFAD88					
JU6H-UFAD98					
JU6H-UFADT0					
JU6H-UFADR8					
JU6H-UFADS8					
JU6H-UFADS0					
JU6H-UFAAS0					
JU6H-UFADW8					
JU6H-UFADX8					
JU6R-UFADX9					
JU6R-UFADX10	CDS50-SC Only at 1470 thru 2100 RPM (See Note 9 & 10)	SC81A (See Note 11)			
JU6R-UFADX11					
JU6R-UFADX12					
JW6H-UFAD80					
JW6H-UFADD0					
JW6H-UFADF0					
ZF6H-UFAC70					
JW6H-UFADJ0					
JW6H-UFAAM8					
JW6H-UFAD70					
JW6H-UFAA80					
DP6H-UFAAX8					
DP6H-UFAA50					
DP6H-UFAA88					
DP8HUFAA62					
DP6H-UFAA70					
DQ6H-UFAA48					
DQ6H-UFAA40					
DQ6H-UFAA50					
DQ6H-UFAA60					
DQ6H-UFAA88					
DQ6H-UFAA98					
JX6H-UFADF0			11.5 OR 14 (SEE NOTE 12)	1	180-10
JX6H-UFAD60					
JX6H-UFADK0					
JX6H-UFAD88					
JX6H-UFADN0					
JX6H-UFADP0					
DR8H-UFAA40					
DR8H-UFAA5G					
DR8H-UFAA68					
DR8H-UFAA62					
DS0H-UFAAM0					
DS0H-UFAAN0	N/A	SC2160A (See Note 11)	14		
DS0H-UFAA68					
DS0H-UFAA60					
DS0H-UFAA98					
DS0H-UFAA92					
DT2H-UFAA20					
DT2H-UFAA58					
DT2H-UFAA50					
DT2H-UFAA60					
DT2H-UFAA88					
DT2H-UFAA98					
DT2H-UFAA92		SC2390 (See Note 11)			

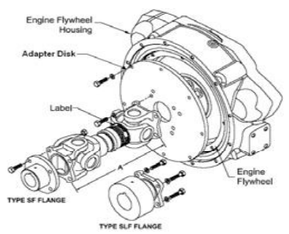

* Rough Stock Bore = Solid Hub with Centering Dimple for machining of special bores & keyways

SHORT COUPLED DRIVESHAFT								
Model	CDS10-SC	CDS20-SC	CDS20-S1	CDS30-S1	CDS50-SC	SC81A	SC2160A	SC2390
Part Number	C083765	C083766	C083767	C083768	C083770	C08628	C083771	C084898
Useable Length "A" (Inch)	9.5 - 10.2	9.8 - 10.7	14.1 - 15.7	14.1 - 15.7	18.9 - 21.9	18.9 - 20.8	18.5 - 20.67	25.23 - 29.56

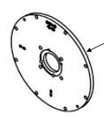

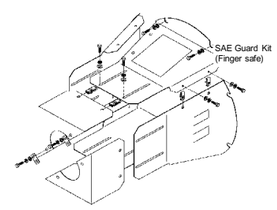

SAE 11.5" ADAPTER DISC						
Series	CDS10	CDS20	CDS30	CDS50	SC81A	SC2160A
Part Number	C08448	C08448	C083762	C083763	C083763	C084708

SAE 14" ADAPTER DISC				
Series	CDS50	SC81A	SC2160A	SC2390
Part Number	C084947	C084947	C084930	C084930

SAE #3 GUARD KIT	CDS20-SC	CDS20-S1	CDS30-S1	CDS50-SC[1] /SC81A	CDS50-SC[2] /SC81A
	C10382	C10383	C10383	C10433	C10455

Model	CDS10-SC
Part Number	C10382

[1] JW6H (TIER 1)
[2] JU6H & JW6H (TIER 2)

SAE #1 GUARD KIT	SC81A	SC2160A	SC2390
	C101074	C101074[1] / C101081[2]	C101078

Model	CDS50-SC
Part Number	C101074

[1] DR8H, DS0H, & DT2H
[2] JX6H

Companion Flange Part Numbers						
Diameter (inch)	Keyway (inch)	CF10	CF20	CF30	CF50	180-10
*Rough Stock Bore	NONE	C084039	C084212	C083333	C083758	C083183
1.000	0.250 x 0.125	C083966				
1.063	0.250 x 0.125	C083968				
1.125	0.250 x 0.125	C083970				
1.188	0.250 x 0.125	C083972				
1.250	0.250 x 0.125	C083974	C084116	C083262	C083662	C083112
1.313	0.312 x 0.156	C083976	C084118	C083264	C083663	
1.375	0.312 x 0.156	C083978	C084120	C083265	C083664	C083114
1.438	0.375 x 0.188	C083980	C084122	C083270	C083666	C083117
1.500	0.375 x 0.188	C083982	C084124	C083272	C083667	C083119
1.563	0.375 x 0.188	C083984	C084126	C083274	C083668	C083121
1.625	0.375 x 0.188	C083986	C084128	C083276	C083669	C083123
1.688	0.375 x 0.188	C083988	C084130	C083280	C083670	C083125
1.750	0.375 x 0.188	C083990	C084132	C083282	C083671	C083127
1.813	0.500 x 0.250	C083992	C084134	C083283	C083672	
1.875	0.500 x 0.250	C083994	C084136	C083285	C083674	C083129
1.938	0.500 x 0.250	C083996	C084138	C083286	C083675	
2.000	0.500 x 0.250	C083998	C084140	C083287	C083676	C083131
2.063	0.500 x 0.250	C084000	C084142	C083289	C083678	C083134
2.125	0.500 x 0.250	C084002	C084144	C083291	C083679	C083136
2.188	0.500 x 0.250	C084004	C084146	C083292	C083680	
2.250	0.500 x 0.250	C084006	C084148	C083293	C083682	C083140
2.313	0.625 x 0.312	C084008	C084150	C083295	C083684	
2.375	0.625 x 0.312	C084010	C084152	C083296	C083685	
2.438	0.625 x 0.312	C084012	C084154	C083297	C083686	C083144
2.500	0.625 x 0.312	C084014	C084156	C083298	C083687	C083146
2.563	0.625 x 0.312	C084016	C084158	C083299	C083688	
2.625	0.625 x 0.312	C084018	C084160	C083300	C083689	C083148
2.688	0.625 x 0.312	C084020	C084162	C083301	C083690	
2.750	0.625 x 0.312	C084022	C084164	C083302	C083691	C083150
2.813	0.750 x 0.375		C084166	C083303	C083694	
2.875	0.750 x 0.375		C084168	C083304	C083695	
2.938	0.750 x 0.375		C084170	C083305	C083696	C083154
3.000	0.750 x 0.375		C084172	C083306	C083697	C083155
3.063	0.750 x 0.375		C084174	C083307	C083698	
3.125	0.750 x 0.375		C084176	C083308	C083699	C083157
3.188	0.750 x 0.375		C084178	C083309	C083700	C083158
3.250	0.750 x 0.375		C084180	C083310	C083701	
3.313	0.875 x 0.438		C084182	C083311	C083702	
3.375	0.875 x 0.438		C084184	C083312	C083703	
3.438	0.875 x 0.438		C084186	C083313	C083704	
3.500	0.875 x 0.438		C084188	C083314	C083705	C083159
3.563	0.875 x 0.438		C084190	C083315	C083706	
3.625	0.875 x 0.438		C084192	C083316	C083707	
3.688	0.875 x 0.438		C084194	C083317	C083708	
3.750	0.875 x 0.438		C084196	C083318	C083709	C083161
3.813	0.875 x 0.438			C083319	C083710	
3.875	1.000 x 0.500			C083320	C083711	
3.938	1.000 x 0.500			C083321	C083712	
4.000	1.000 x 0.500			C083322	C083713	C083165
4.063	1.000 x 0.500			C083323	C083714	
4.125	1.000 x 0.500			C083324	C083715	
4.188	1.000 x 0.500			C083325	C083716	
4.250	1.000 x 0.500			C083326	C083717	

Continued

Companion Flange Part Numbers						
Diameter (inch)	Keyway (inch)	CF10	CF20	CF30	CF50	180-10
*Rough Stock Bore	NONE	C084040	C084213	C083334	C083759	C083184
4.313	1.000 x 0.500			C083327	C083718	
4.375	1.000 x 0.500			C083328	C083719	
4.438	1.000 x 0.500			C083329	C083720	
4.500	1.000 x 0.500			C083330	C083721	
4.563	1.000 x 0.500				C083722	
4.625	1.000 x 0.500				C083723	
4.688	1.000 x 0.500				C083724	
4.750	1.250 x 0.625				C083725	
4.813	1.250 x 0.625				C083726	
4.875	1.250 x 0.625				C083727	
4.938	1.250 x 0.625				C083728	
5.000	1.250 x 0.625				C083729	
5.063	1.250 x 0.625				C083730	
5.125	1.250 x 0.625				C083731	
5.188	1.250 x 0.625				C083732	
5.250	1.250 x 0.625				C083733	
5.313	1.250 x 0.625				C083734	
5.375	1.250 x 0.625				C083735	
5.438	1.250 x 0.625				C083736	
5.500	1.250 x 0.625				C083737	

Notes:

1. Driveshaft Assembly consists of:
   (1) Driveshaft w/mounting hardware to adapter disc
2. Optional Driveshaft Assembly items consist of:
   (1) SAE Adapter Disc w/ mounting hardware to engine flywheel
   (1) Pump Companion Flange w/mounting hardware to driveshaft
   (1) SAE Fingersafe Telescoping Guard w/mounting hardware
3. For bores and keyways not shown contact Clarke
4. Listed Flexible Connecting Shafts (for rated BHP's & speeds given in tables above) can only be used with fixed speed Centrifugal Fire Pumps, contact Clarke for application guidelines for Positive Displacement Fire Pumps
5. Listed for use with Diesel Engine Driven Fire Pumps only
6. Shading denotes Type SLF Companion Flanges
7. It is recommended that a torsional analysis be conducted on the actual drive system arrangement
8. For Driveshaft dimensional data see Installation Drawing D615
9. CDS50 Listed Driveshafts at 2100 RPM Only for JW6H-UFAA80 & JW6H-UFAD80. CDS50-SC Listed Driveshaft at 1470 RPM only for DP6H-UFAA70 and at 1760 RPM only for DP6H-UFAA88
10. UL Listed Driveshaft
11. Non-Listed Driveshaft
12. All JX6H Engine Models will feature a 14" SAE Flywheel as of Aug. 1 2014.

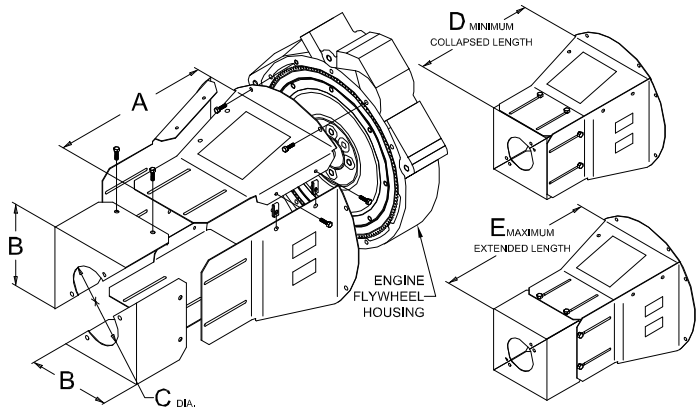

STYLE #1

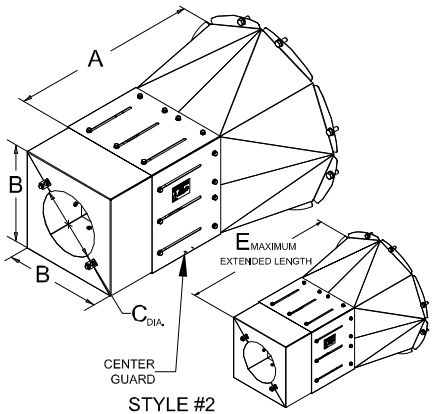

STYLE #2

KIT PART NUMBER	USED WITH DRIVESHAFT MODEL		SAE FLYWHEEL HOUSING #	STYLE	GUARD PART NUMBER	CENTER GUARD PART NUMBER	END CAP PART NUMBER	USED WITH BASE ENGINE MODELS	A	B	C	D	E
	LISTED	NON-LISTED											
C10382	CDS10-SC	USE LISTED DRIVESHAFT	3	#1	C101137	NA	C101143	JU4H & JU4R	247.7[9.75]	227.3[8.95]	109.5[4.32]	297.7[11.72]	373.9[14.72]
	CDS20-SC												
C10383	CDS20-S1				C101141			JU6H & JU6R	381.0[15.00]			383.5[15.10]	507.2[19.97]
	CDS30-S1							JU4H, JU4R, JU6H & JU6R					
C10433	CDS50-SC (SEE NOTE 6)	SC81A (SEE NOTE 6)						JW6H (TIER 1)					
C10455					C101140	NA	C101142	JU6H, JU6R & JW6H (TIER 3/NON-EM)	541.0[21.30]	273.1[10.75]	125.4[4.94]	541.0[21.30]	686.6[27.03]
	CDS50-SC (SEE NOTE 7)	SC81A (SEE NOTE 7)						ZF6H (TIER 2)					
C101091	USE NONLISTED DRIVESHAFT	SC2160A	1	#2	C101138	C101072	C101139	JX6H	557.1[21.93]	305.3[12.02]	127.0[5.00]	EQUAL TO "A" DIMENSION	707.1[27.84]
C101074	CDS50-SC (SEE NOTE 6)	SC81A (SEE NOTE 6)						DP6H					
	CDS50-SC (SEE NOTE 6)	USE LISTED DRIVESHAFT						DQ6H					
	USE NONLISTED DRIVESHAFT	SC2160A						DR8H, DS0H, & DT2H					
C101078		SC2390				C101071		DT2H	745.2[29.34]				895.1[35.24]
	EXTENDED LENGTH DRIVESHAFTS	EXTENDED LENGTH DRIVESHAFTS						DP6H, DQ6H, DR8H, DS0H, & DT2H					
C101080						C101079			910.3[35.84]				1060.5[41.75]
C101097						C101071		JX6H	745.2[29.34]				895.1[35.24]
C101098						C101079			910.3[35.84]				1060.5[41.75]

NOTES:
1. GUARDING DESIGNED FOR FINGER SAFE OPERATION ONLY.
2. FOR HARDWARE REFERENCE C135181.
3. FOR ADAPTER DISCS SEE DRAWING D620.
4. FOR DRIVESHAFTS SEE DRAWING D615.
5. FOR COMPANION FLANGES SEE DRAWING D621.
6. CDS50-SC ONLY FOR 1470 THRU 2100 RPM. ENGINES JW6H-UFAD80, AA80 USE (SC81A@1760RPM) (CDS50-SC@2100RPM)
7. C0S50-SC only for 1470-2100 RPM SC814 only for 2350-2650 RPM

REV	DESCRIPTION	ECN#	DWN	APVD	DATE
G	ADDED STYLE # 1 BACK TO JX6H ENGINE MODELS	–	DGP	KRW	08AUG11
H	CHANGES TO DIMS B, C, D, & E. ADDED DR & DS ENGINE MODELS, ADDED NEW GUARD KITS	2524	MAL	KRW	21DEC11
J	UPDATED GUARD AND END CAP P/N'S, NOTE 2 REFERENCED C132622, UPDATED NOTES 3-5.	2830	MLL	KRF	09MAY13
K	ADDED NEW ENGINE MODELS	3306	DGP	KRW	16DEC13
L	DIM "C" FOR C101139 WAS 189.5[7.46] IN ERROR	3721	MLL	JCA	17OCT14
M	ADDED ZF6H MODELS	3968	GRM	JCA	5FEB15

THIS DRAWING AND THE INFORMATION HEREON ARE OUR PROPERTY AND MAY BE USED BY OTHERS ONLY AS AUTHORIZED BY US. UNPUBLISHED–ALL RIGHTS RESERVED UNDER THE COPYRIGHT LAWS.

MACHINE TOLERANCES

DECIMAL	mm	Inch
X.X	±1.5	
X.XX	±0.8	±1/32
X.XXX	±0.3	±1/128
X.XXXX	±0.125	±1/1000
X.XXXXX		±1/2000

ANGULAR: ±0.5°

FABRICATION TOLERANCES

DECIMAL	mm	Inch
X.X	±3	
X.XX	±1.5	±1/32
X.XX		±1/64

ANGULAR: ±1.0°

YES NO CONTROLLED DRAWING

CLARKE
Fire Protection Products, Inc.

DRWN	RJTOLLE
DATE	21MAY08
ENGR	KWAULIGMAN
MATERIAL	ALUMINUM
NAME	GUARDING FOR UL LISTED AND NON-LISTED DRIVESHAFTS
PART NO.	D624
REV	M
SIMILAR TO	
USED ON/LAYOUT PART NO.	
UNITS	MM [INCH]
PAGE	1 OF 1

AURORA® FIRE PUMPS

DIESEL ENGINE MUFFLERS

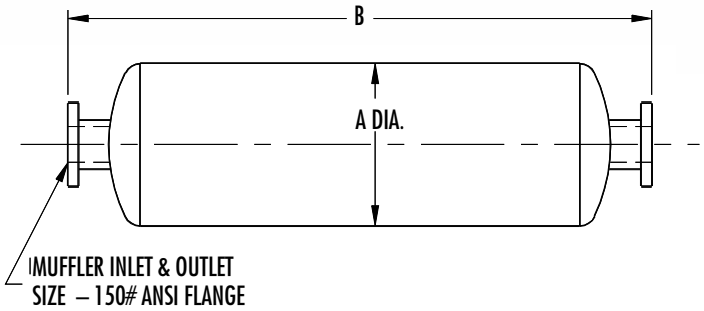

ENGINE MODEL	MUFFLER INLET & OUTLET	COMMERCIAL GRADE			RESIDENTIAL GRADE			CRITICAL GRADE		
		A	B	WGT	A	B	WGT	A	B	WGT
CATERPILLAR										
3406C	6" FLANGED	12	42	35	12	54	43	16	73	131
3412C*, 3508C, C18*	8" FLANGED	18	49	110	18	61	124	20	75	220
CLARKE FIRE PROTECTION										
JU4H-UF10, -UF12, -UF14, -UF20, -UF22, -UF24, -UFAB26, -UFAEA0, -UFAEE8, -UFAEF2, -UFADJ2, -UFADJ8	3" NPT	8	36	19	8	42	21	10	42	42
JU4R-UF09, -UF11, -UF13, -UF19, -UF21, -UF23, -UFAEA9, -UFAEE7, -UFAEF1										
JU4H-UF30, -UF32, -UF34, -UF40, -UF42, -UF 50, -UF52, -UF54, -UF58, -UFADJG, -UFADP0, -UFADR0, -UFADW8, -UFADY8, -UFAD5G	4" FLANGED	10	36	24	10	46	29	12	55	68
JU4R-UF40, -UF49, UF51 -UF53										
JU6H-UF30, -UF32, -UF34, -UF 50, -UF52, -UF54, -UF58, -UF60, -UF62, -UF62, -UF68, -UF84, -UFAAPG, -UFAAQ8, -UFAARG, -UFAAS0,-UFAB76, -UFABL0, -UFABL8, -UFD0, -UFD2, -UFG8, -UFM0, -UFM2, -UFM8, -UFAD58, -UFAD88, -UFADM0, -UFADM8, -UFADN0, -UFADNG, -UFADP8	5" FLANGED	10	42	27	10	54	34	14	61	92
DP6H SERIES										
JW6H-UF30, -UF40, UF48										
DS0H SERIES*	5" FLANGED	10	42	27	10	54	34	14	61	92
DR8H SERIES*										
JW6H-UF50, -UF58, -UF60, -UF8, -UFAAM8, -UFAA80, -UFADD0, -UFADB0, -UFADF0, -UFADJ0, -FAD70, -UFAD80	6" FLANGED	12	42	35	12	54	43	16	73	131
JU6H-UFAD98, -UFADP0, -UFADQ0, -UFADR0, -UFADR8, -UFADS0, -UFADS8, -FADT0, -UFADW8 -UFADX8										
DQ6H SERIES										
DT2H SERIES*										
JX6H SERIES	8" FLANGED	18	49	110	18	61	124	20	75	220
CUMMINS										
CFP5E, CFP59, CFP7E Series	4" NPT, FLANGED	10	36	24	10	46	29	12	55	68
CFP83 Series	4" NPT, FLANGED	10	36	24	10	46	29	12	55	68
CFP9E Series	5" NPT, FLANGED	10	42	27	10	54	34	14	61	92
CFP11E Series	5" NPT, FLANGED	10	42	27	10	54	34	14	61	92
CFP15E Series	6" FLANGED	12	42	35	12	54	43	16	73	131
CFP23E Series	8" NPT, FLANGED	18	49	110	18	61	124	20	75	220
CFP30E Series	10" NPT, FLANGED	22	64	205	22	75	220	28	99	360
DEUTZ										
DFP4-2011 Series	3" NPT	8	36	19	8	42	21	10	42	42
DFP4-2012 Series	4" FLANGED	10	36	24	10	46	29	12	55	68
DFP6 Series	6" FLANGED	12	42	35	12	54	43	16	73	131

CLARKE

www.clarkefire.com **Fire Protection Products**

JU6H-UFADX8

FIRE PUMP DRIVER

NOISE DATA

Mechanical Engine Noise *

RPM	BHP	OVERALL dB(A)	Octave Band 31.5 Hz dB(A)	63 Hz dB(A)	125 Hz dB(A)	250 Hz dB(A)	500 Hz dB(A)	1k Hz dB(A)	2k Hz dB(A)	4k Hz dB(A)	8k Hz dB(A)	16k Hz dB(A)
1760	305	109.2	67.0	69.2	82.6	89.2	97.1	99.7	104.9	103.4	101.7	101.7

Raw Exhaust Engine Noise **

RPM	BHP	OVERALL dB(A)	Octave Band 31.5 Hz dB(A)	63 Hz dB(A)	125 Hz dB(A)	250 Hz dB(A)	500 Hz dB(A)	1k Hz dB(A)	2k Hz dB(A)	4k Hz dB(A)	8k Hz dB(A)	16k Hz dB(A)
1760	305	112.1		101.8	106.2	100.9	103.1	102.7	105.4	102.6	92.3	85.9

** Values above are provided at 3.3ft (1m) from engine block and do not include the raw exhaust noise.*

*** Values above are provided at 23ft (7m), 90 ° horizontal, from a vertical exhaust outlet and does not include noise created mechanically by the engine.*

The above data reflects values for a typical engine of this model, speed and power in a free-field environment.

Installation specifics such as background noise level and amplification of noise levels from reflecting off of surrounding objects, will affect the overall noise levels observed. As a result of this, Clarke makes no guarantees to the above levels in an actual installation.

Powerscreen® Premiertrak 600
Jaw Crusher

SPECIFICATION - Rev 0. 01/03/2015

POWERSCREEN®
A TEREX BRAND

Specification		Premiertrak 600
Total weight		**69,500kg (153,221lbs) including magnet & dirt conveyor.**
Transport	**Length**	**17.1m (56' 1")**
	Width	**3.0m (9' 10")**
	Height	**3.8m (12' 5")**
Working	**Length**	**16.63m (54' 7")**
	Width	**8.05m (26' 5") with dirt conveyor**
	Height	**4.49m (14' 9")**

Crusher type:	**Single toggle jaw, feed opening 1200mm x 820mm (47"x32")**
Power unit:	**Caterpillar C13 328kW (440hp) or Scania DC13 331kW (444hp) Direct Drive**
Paint colour:	**Blue RAL 5021, Grey RAL 7024, Black RAL 9005**

Features & Benefits

The Powerscreen® Premiertrak 600 range of high performance primary jaw crushing plants are designed for large and medium scale operators in quarrying, demolition, recycling & mining applications.

The range includes the Premiertrak 600 & Premiertrak 600E both equipped with the advanced high performance 1200mm x 820mm Terex chamber. Built for the toughest of applications, the robust construction and modern design of the Premiertrak 600 ensures optimum performance, reliability and efficiency.

- **Output potential up to 600tph (661 US tph) (Depending on application & CSS)**
- **Ground level quick set-up with hydraulic folding feed hopper with hydraulic locking system**
- **Heavy duty wear resistant feed hopper**
- **Stepped self-cleaning grizzly feeder with under feeder screen**
- **Wide bypass chute to optimise material flow**
- **Aggressive crushing action with high swing jaw encouraging material entry into crushing chamber**
- **Fully hydraulic crusher setting adjustment**
- **Excellent under crusher access for removal of wire with hydraulic raise lower product conveyor**
- **Angle adjustable product conveyor, lowers for access & transport**
- **Low fuel consumption due to highly efficient direct drive system and low engine RPM**
- **Easily accessed power-unit canopy**
- **Modern & user-friendly PLC control system with auto start facility**
- **Remote control via umbilical**
- **Dust suppression system**

Applications

Aggregate

- **Sand & gravel**
- **Blasted rock**
- **River rock**

Recycling

- **C&D waste**
- **Overburden**
- **Foundry waste**

Mining

- **Processed ores**
- **Processed minerals**

All specifications subject to change without prior notice

POWERSCREEN® A TEREX BRAND

Jaw Crusher

Crusher type:	**Single toggle Jaw with hydraulic setting adjustment**
Feed opening:	**1200mm x 820mm (42” x 37”)**
Bearings:	**Self aligning spherical roller**
Lubrication:	**Grease**
Drive:	**High Performance wedge belts with screw adjust tensioner**
Minimum setting:	**75mm (3”) CSS**
	All setting measured from root to tip & subject to suitability of feed material. This plant has been designed for both quarry & recycling applications where appropriate. For maximum material strength of 500kN 10% Fines, 300MPa compressive strength. If in doubt please contact your dealer or Powerscreen.
Maximum setting:	**200mm (8”) CSS standard jaws**
Hydraulic adjustment:	**Hydraulically adjusted C.S.S using wedge system. Electric push button control**

HA Jaw Chamber

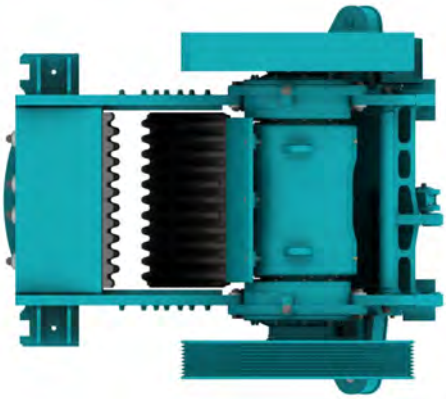

Chamber Features

- Quick & easy setting adjustment
- Drawback rod hydraulic adjustments not required during setting changes
- Cartridge type bearings
- Overlap jaw protects tip of jawstock
- One piece fixed jaw support
- Proven manganese liner retention
- Replaceable bolt-on jawstock toe
- Proven manganese liner retention—through bolt design

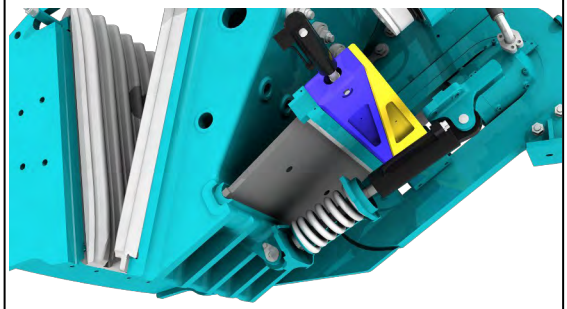

Hopper

Hopper type:	Hydraulic locking from ground level
Hopper length:	4.82m (15' 10")
Hopper width:	2.2m (7' 3") standard 4m (13' 1") with extensions
Hopper capacity:	9.3m^3 (12.2 cu. yd.) / 14.2m^3 (18.6 cu. yd.)
Hopper body:	Abrasion resistant feed hopper with hydraulic struts and pins

*Optional Short Hopper Extensions:

Capacity: 10.8m^3 (14.1 cu.yd.)
370mm higher feed in height over standard hopper

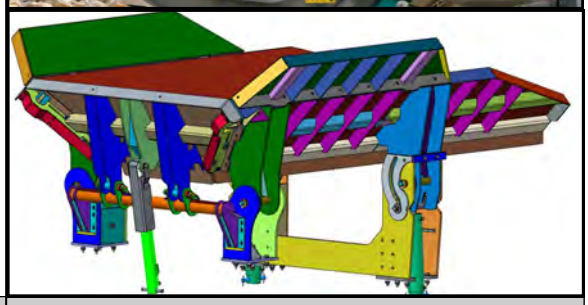

Vibrating Grizzly Feeder

Type:	Spring mounted vibrating pan & grizzly feeder
Vibrating Unit:	Twin heavy-duty cast eccentric shafts running in spherical roller bearings, gear coupled at drive end
Drive:	Flange mounted hydraulic motor
Pan length:	2.15m (7' 1")
Pan width:	1.16m (3' 10'')
Grizzly:	2 replaceable stepped cartridge type grizzlies 75mm (3'') nominal aperture, self cleaning
Grizzly length:	2.12m (6' 11'')
Grizzly width:	1.14m (3' 9'')
Under-screen:	40mm (1.5'') mesh fitted as standard
Mesh deck:	1.38m (4' 6")long x 1.16m(3' 10'') wide

Plant Chute-work

Crusher feed chute:	Bolted assembly. 12mm mild steel side walls with 15mm wear plates
Grizzly fines/ bypass	Lined with abrasion resistant wear plate. Adjustable deflector plate to direct material to dirt conveyor or product conveyor

Product Conveyor

Conveyor type:	Troughed belt conveyor
Design:	Hydraulic raise & lower facility to aid rebar removal & transportation. Can be raised or lowered whilst crushing. Fully removable modular unit to aid access & maintenance. Lower section raises & lowers for optimum ground clearance.
Belt type:	EP500/3 with 8mm top & 2mm bottom cover, vulcanised
Belt width:	1200mm (47”)
Discharge height:	4.0m (13’ 1”)
Stockpile volume:	136m^3 (178 cu. yd.)
Max. clearance:	450mm (18”) (jaw to belt)
Drive:	Twin direct drive hydraulic motor
Tunnel:	Conveyor fitted with tunnel & side covers to minimise rebar snagging
Feed-boot:	Mild steel plate with abrasion resistant steel liners at feed point
Belt adjustment:	Screw adjusters at head drum
Belt scraper:	SCS style
Lubrication:	Low level remote head drum grease points
Skirting:	Wear resistant rubber skirts fitted up

Dust Suppression System

Sprays bars with atomiser nozzles mounted over crusher mouth, product conveyor feed & discharge points. Piped to an inlet manifold for client’s pressured water supply

Type:	Clean water multi atomising nozzles
Inlet:	Single filtered inlet point on chassis
Pressure:	2.8 bar (42 psi)
Frost protection:	Via system drain valves
Pump:	Optional extra

Power Unit

EU Stage IIIA / US Tier 3:	Caterpillar C13, 6 cylinder, direct injection 328kW (440hp) at 1800rpm *
Operating conditions:	Ambient temp. +40°C & –12°C (104F & 10F) altitudes up to 1000m (3281ft) above sea level #
Operating rpm range:	1700-1900 rpm
Plant drive:	Direct drive
Fuel tank capacity:	750 L (198 US G) - sufficient for a 12 hour shift
Hydraulic tank capacity:	750 L (198 US G)

EU Stage IV / US Tier 4F :	Scania DC13 84A 6 cylinder, turbo, 331kW (444hp) at 1600rpm
Operating conditions:	Ambient temperature +40°C & –12°C (104F & 10F) at altitudes up to 1000m (3281ft) above sea level #
Operating rpm range:	1600—1800 rpm
Emission control technique:	Selective Catalytic Reduction (SCR)
Reductant tank size:	60 L (16 US G)
Plant drive:	Direct drive
Fuel tank capacity:	750 L (198 US G) - sufficient for a 12 hour shift
Hydraulic tank capacity:	750 L (198 US G)

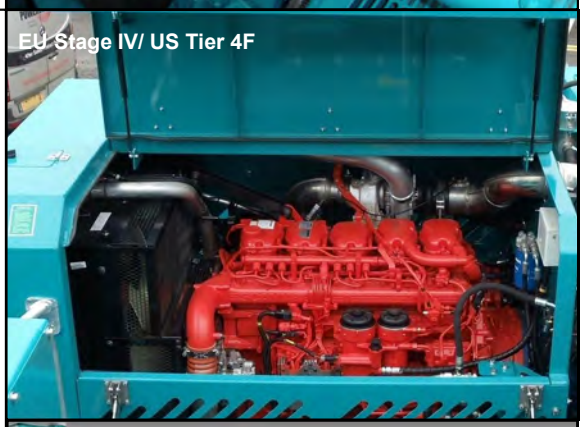

Clutch type:	Highly efficient, self-adjusting HPTO 12 dry plate clutch with electro hydraulic operation
Crusher drive:	Direct drive via wedge belts Clutch pulley diameter 236mm Crusher pulley diameter 1568mm
Drive tensioning:	Manual via tensioner wheel

For applications outside this range please consult with Powerscreen as the plant performance / reliability may be affected

Scania Stage IV / Tier 4 Final Technology

Scania industrial engines meet the requirements of Stage IV and Tier 4 Final without the need for a particulate filter. With only EGR and SCR technology, the installation will be unaffected. Scania-developed systems for engine management and emission control ensure an attractive blend of performance and operating economy.
The function of the SCR system is based on the injection of a urea solution (AdBlue or DEF, Diesel Exhaust Fluid) into the after-treatment system.
With EGR, a small amount of exhaust gases is returned to the intake of the engine, diluting the intake air and reducing the oxygen concentration. This will reduce the combustion temperature and further reduce emissions.

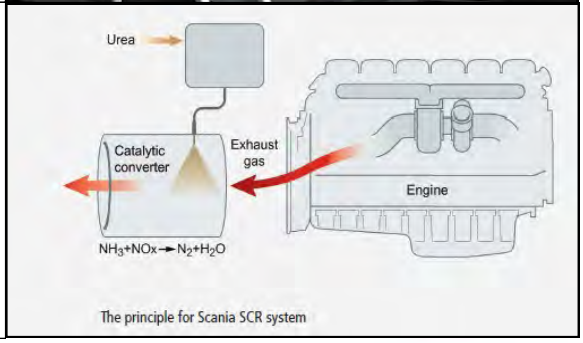

The principle for Scania SCR system

Crawler Tracks

Type:	Heavy-duty tracks
Pitch:	203mm (8’’)
Longitudinal centers:	4170mm (13’ 8’’)
Track width:	500 mm (19.7’’)
Climbing grade:	30˚ maximum
Speed:	0.81kph (0.5mph)
Drive:	Hydraulic motors
Tensioning:	Hydraulic adjuster, grease

Guarding

Composite and/or steel guards are provided for all drives, flywheels, pulleys & couplings

The guards provided are designed & manufactured to meet CE & ANSI standards

Hinged access guards are provided on the top, side & both ends of the engine

Platforms

A folding access ladder is provided to gain access to each side of the power unit

A maintenance platform is provided on one side of the feeder with double row handrails & access ladders.
A platform is also included to gain access between the crusher & the power unit

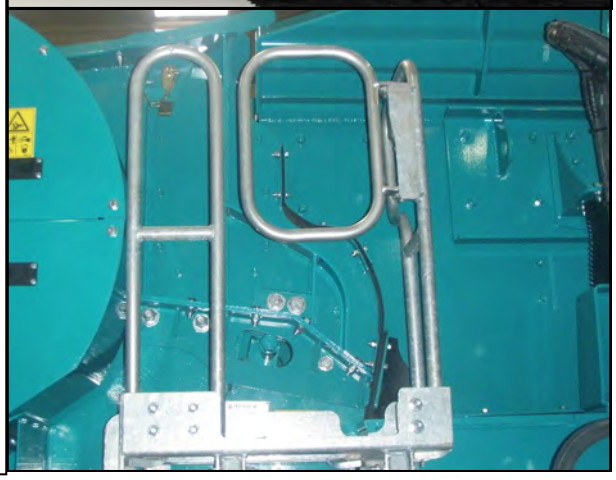

Plant Controls

Full PLC control panel

Full system diagnostics

Controls fitted to the plant include:

Sequential start up

- **Engine (start/stop/speed)**
- **Crusher (start/stop)**
- **Optional dirt conveyor (start/stop)**
- **Product conveyor (start/stop & raise/lower)**
- **Feeder (start/stop/speed) controls, located on the side of the plant**

Umbilical Control

An umbilical control unit is also supplied as standard with the plant

Controls tracking function & has a stop button for the plant

Chassis

Heavy duty I-section welded construction, provides maximum strength & accessibility

Optional Extras

- **Pre-screen system**
- **Wire mesh for under-screen (standard)**
- **Quarry tooth, pyramid tooth or heavy duty tooth jaw plates**
- **Deflector plate under crusher**
- **Dirt conveyor**
- **Single pole overband magnetic separator**
- **Twin pole overband magnetic separator**
- **Belt weigher**
- **Electric refuelling pump**
- **Electric urea pump**
- **Hydraulic water pump**
- **Radio remote control**
- **Stockpiler drive (Tier 4 machines only)**

All specifications subject to change without prior notice

POWERSCREEN® A TEREX BRAND

Powerscreen® Premiertrak 600 Options

Pan Feeder & Live Pre-screen

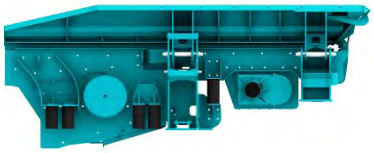

Vibrating pan feeder with double deck live pre-screen

Pan type:	**Sprung vibrating pan**
Vibrating unit:	**Twin heavy duty cast eccentric shafts running in spherical roller bearings, gear coupled at drive end, flange mounted hydraulic motor**
Dimensions:	**Length: 2.39m (7' 10") Width: 1.08m (3' 7'')**
Pan:	**15mm thick fully welded base plate with 12mm thick abrasion resistant liners**
Pan:	**Variable speed control though control panel & (radio remote optional)**
Pre-screen:	**Sprung vibrating unit 9mm throw, 1000rpm screen speed**
Vibrating unit:	**Single shaft, out of balance weights, flange mounted hydraulic motor**
Top deck:	**2 piece cartridge with 2.04m (6' 8") long self cleaning fingers 75mm (2") nominal spacing Length: 2m (6' 6") Width: 1.2m (4')**
Bottom deck:	**16º Incline with 40mm (1.5") mesh Length: 1.38m (4' 6") Width: 1.2m (4')**
Chute:	**Bypass chute with internal 2 way flap door fitted, to control direction of fines, either forward onto the product belt or onto the optional side conveyor**

Extended Product Conveyor

Discharge Height: 4.6m (15' 1")

Stockpile Volume: 156m3 (205cu. yd.)

Hydraulically folds for transport.

Powerscreen® Premiertrak 600 Options

Hopper Extensions

Hopper type: Bolt-on extensions

Hopper length: 4820mm (15' 10")

Hopper width: 4000mm (13' 1")

Hopper body: 15mm wear resistant plate, steel ribs

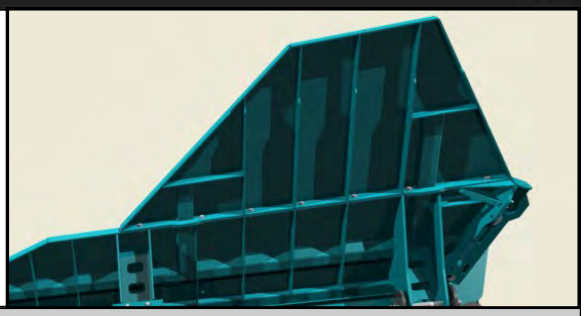

Feeder Under Screen Mesh

Position: Optional aperture meshes fitted in lieu of the standard 40mm mesh.

Width: 1.16m (3' 10'')
Length: 1.38m (4' 6")

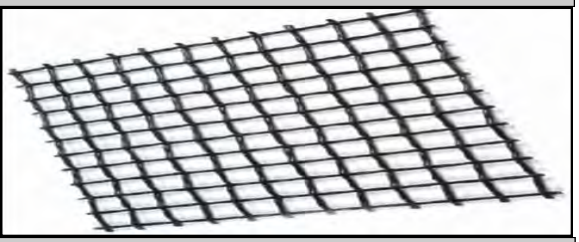

Jaw Profiles

All jaw profiles supplied in 18% manganese as standard. This is the proven material for quarry & recycling applications with an initial hardness of around 230BHN (Brinell Hardness)

Super Tooth Jaws (Standard offering)

For extended life across most quarrying applications. Super tooth has a significantly increased wear life using a deeper profile without comprising strength or product shape.

Quarry Tooth Jaws

Quarry jaws are suitable for use in medium rock, hard rock and high abrasion applications. Will provide a longer wear life due to the additional material on the teeth of the jaw. (Minimum CSS is 50mm)

Heavy Duty Jaws

New design of HD jaw plate for the fixed jaw. Designed to work with other profiles on the swing jaw. Aimed to bring the wear in line with the swing jaw and reduce the amount of liner changes required.

Pyramid Tooth Jaws

Designed as a Jaw for recycling applications or with rock that is difficult to fracture.

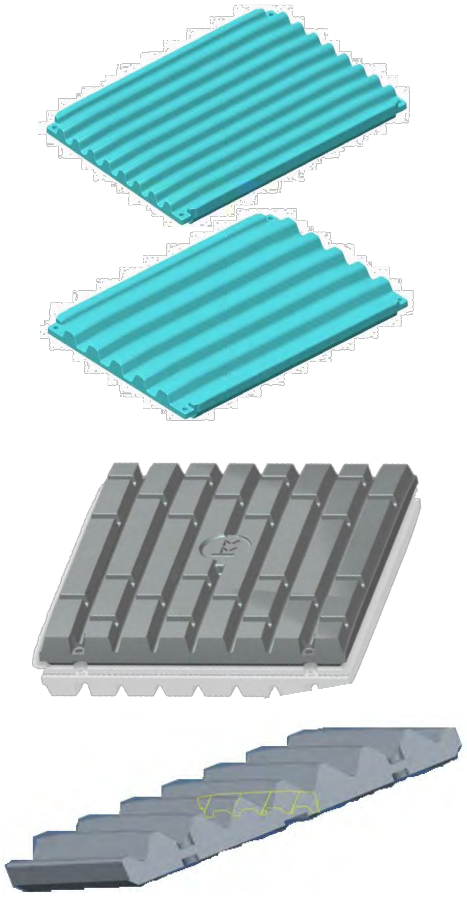

Under Crusher Deflector Plate

A hydraulic adjustable deflector plate, increases belt protection on recycling applications. Situated immediately below the crusher outlet point & is fitted with a 15mm thick wear resistant plate. Deflector plate working angle can be adjusted from the PLC control system.

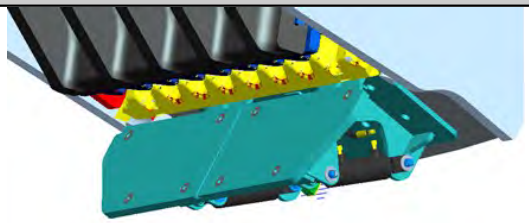

All specifications subject to change without prior notice

Powerscreen® Premiertrak 600 Options

Bypass / Dirt Conveyor

Conveyor type:	Troughed, modular with hydraulic folding for transport
Width:	750mm (29.5”)
Discharge height:	3.8m (12’6”)
Stockpile volume:	117m^3 (153cu. yd.)
Drive:	Direct drive hydraulic motor

Magnet

Options:	CP020 single pole (S.P.) TP020 twin pole (T.P.)
Belt width:	750mm (30”)
Centres:	1700mm (67”)
Drive / Control:	Direct drive hydraulic motor, pre-set variable speed
Discharge:	RHS via stainless shedder plate
Weight:	S.P. 975kg (2150lbs) T.P. 1470kg (3240lbs)

Radio Remote Control

Complete with integrated tracking functions & plant stop button. NB - Only available in certain countries where type approval has been obtained

Remote can also be used to:

- Feeder (start/stop)

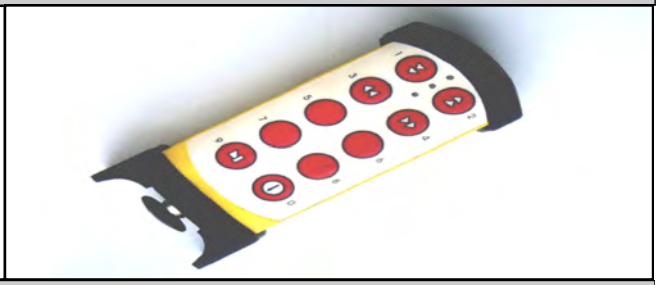

Belt Weigher

Type:	Modular scale with stainless load cells, single idler speed wheel & display unit
Accuracy:	± 1.0 + 0.5%
Load cells:	2 temperature compensated parallelogram-style, stainless steel
Display:	Separate read out near control panel

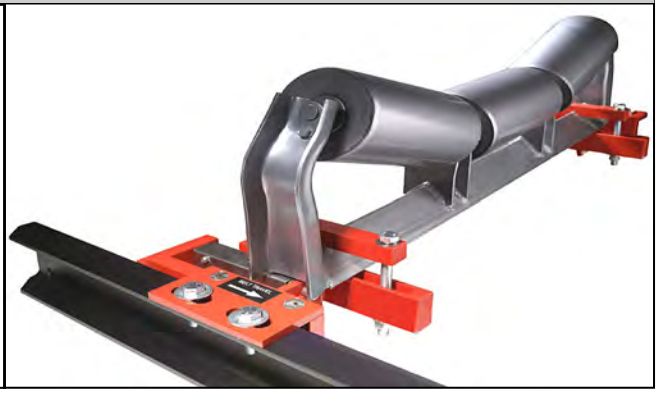

All specifications subject to change without prior notice

POWERSCREEN® A TEREX BRAND

Electric Refuelling Pump

A 24 volt refuelling pump, allows fuel to be drawn from a remote source. Fuel transfer rate is 50 L/min (13 G/min). Includes refuelling hose and end filter

Hydraulic Water Pump

A hydraulically powered water pump is available to power the dust suppression system

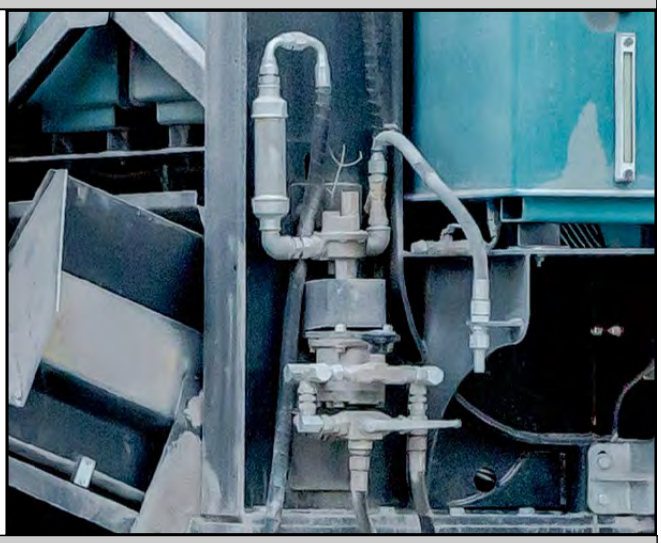

Hot/Cold Climate Oils

Cold climate oils - (Recommended for ambient temperatures between -20 to +30oC

Hot climate oils - (Recommended for ambient temperatures between +15 to +50oC

Control Panel Positive Pressurisation

An additional unit designed to reduce dust particles within the Control Panel.

A continuous flow of clean air is passed through the cabinet whilst the unit simultaneously filters out any particulate laden air.

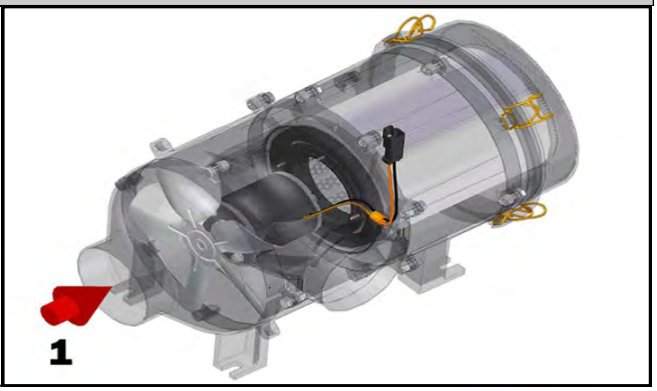

Working Dimensions

Working length:	**16.63m (54’ 7”)**
Working width:	**8.05m (26’ 5”) with extended dirt conveyor**
Working height:	**4.49m (14’ 9”)**

Premiertrak 600
Working Dimensions

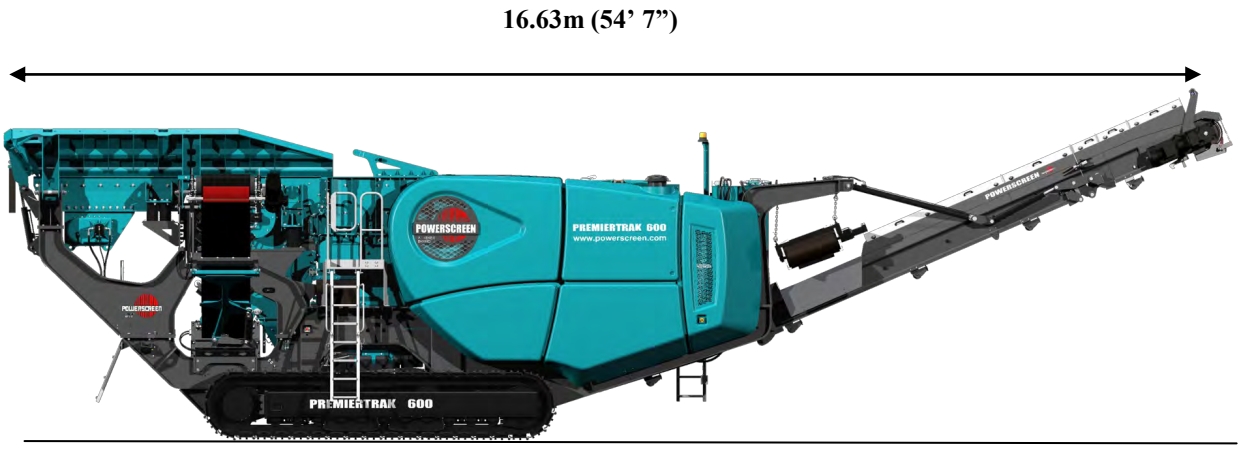

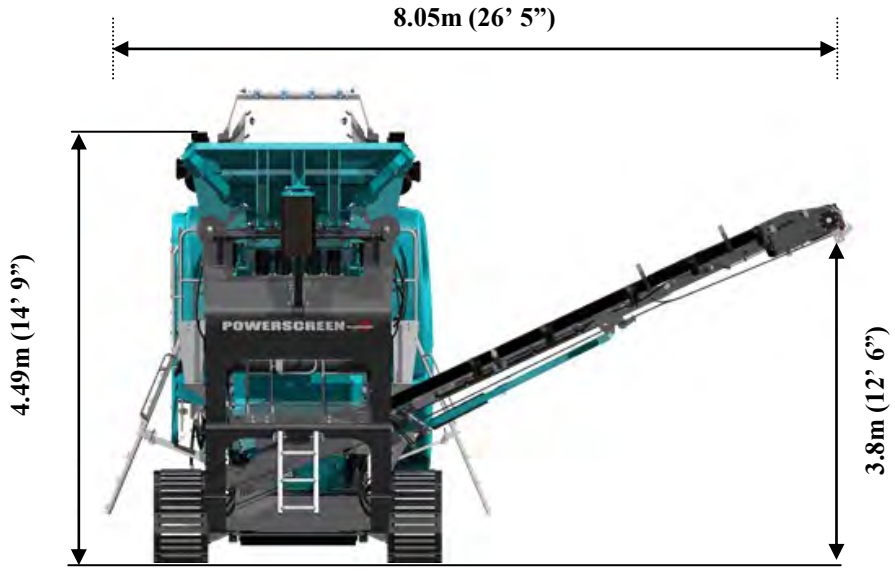

Transport Dimensions

Transport length:	**17.1m (56’ 1”)**
Transport width:	**3.0m (9’ 10”)**
Transport height:	**3.8m (12’ 5”)**

Premiertrak 600
Transport Dimensions

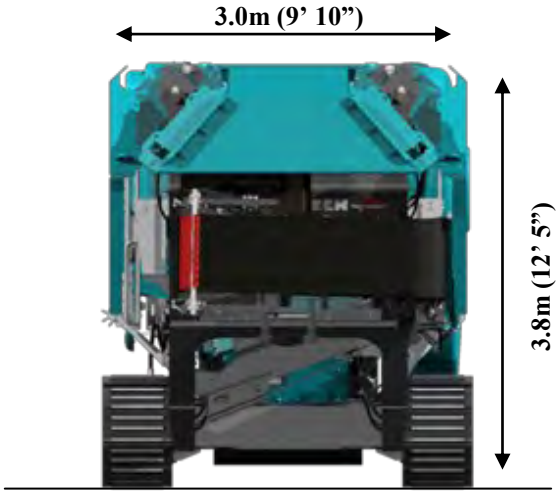

Powerscreen equipment complies with CE requirements.

Please consult Powerscreen if you have any other specific requirements in respect of guarding, noise or vibration levels, dust emissions, or any other factors relevant to health and safety measures or environmental protection needs. On receipt of specific requests, we will endeavour to ascertain the need for additional equipment and, if appropriate, quote extra to contract prices.

All reasonable steps have been taken to ensure the accuracy of this publication, however due to a policy of continual product development we reserve the right to change specifications without notice.

It is the importers' responsibility to check that all equipment supplied complies with local legislation regulatory requirements.

Plant performance figures given in this brochure are for illustration purposes only and will vary depending upon various factors, including feed material gradings and characteristics. Information relating to capacity or performance contained within this publication is not intended to be, nor will be, legally binding.

Terex GB Ltd.
200 Coalisland Road
Dungannon
Co. Tyrone
Northern Ireland
BT71 4DR

Tel: +44(0) 28 8774 0701
Fax: +44(0) 28 8774 6569

E-Mail: sales@powerscreen.com
Web: www.powerscreen.com

Terex is a registered trademark of Terex Corporation in the United States of America and many other countries.
Powerscreen is a registered trademark of Terex GB Ltd in the United States of America and many other countries.

Copyright Terex Corporation 2015

Data Sheet

newgold Rainy River Resources Ltd. amec

Title	**Gold Room Package**			**Proj Doc No.**	**N/A**		
Proj Name	Rainy River			**AMEC Doc. No.**	**100126-3200-DE10-DAT-0213.006**		
Client	New Gold			**Proj No.**	100126	**Rev**	**B**
Supplier		**AWBS No.**		**Plant/Area No.**	3200	**Pkg No.**	PJ0213
Tag No(s).	3260-FN-0001, 3260-XX-0054, 3240-BI-0030, 3260-XX-0056, 3260-XX-0057, 3260-BH-0030, 3260-FA-0036					**Qty**	
Item Desc	Induction Crucible Furnace, Slag Pots, Slag Bin, Cascade Mold Stand, Bullion Molds, Furnace Exhaust Dust Collector and Fan, Water Bath						**Rev**

	Item		Unit	Data	Comments	
1	**AMEC DATA**					
2	**Location, Site and Operating Conditions**					
3	Location:	Indoor / Outdoor		Indoor		A
4		Heated / Unheated		Heated		A
5	Ambient Temperature:	Minimum	℃	10		A
6		Maximum	℃	35		A
7	Site Elevation:		m ASL	350		A
8	Electrical Classification:	CL / Gr / Div				A
9	Environment:	Toxic	Y / N	N		A
10		Corrosive	Y / N	Y		A
11		Flammable	Y / N	N		A
12		Dusty	Y / N	N		A
13	Operation:	Continuous / Intermittent		Intermittent		A
14	Operating Schedule:		hr/day	10		A
15			days/year	120		A
16			starts/hour	1		A
17			starts/day	3		A
18	**General**					
19	**Induction Crucible Furnace**			**3260-FN-0001**		A
20	Number of Furnaces			1		A
21	Furnace Type			Induction		A
22	Furnace Capacity		m3	0.2		A
23	Furnace Power		kW	By vendor		A
24	Number of Crucibles			4		A
25						A
26	**Slag Pot**			**3260-XX-0054**		A
27	Quantity			2		A
28	Minimum capacity		m3 per pot	0.125		A
29						A
30	**Mold Stand**			**3260-XX-0056**		A
31	Type			Cascade (preferred)		A
32						A
33	**Bullion Molds**			**3260-XX-0057**		A
34	Number of molds per pour			7		A
35	Number of spare molds			2		A
36	Doré Bar Size		kg	31.1		A
37	Doré Bar Size		troy oz	1000		A
38	Preferred mold make			TBA		A
39						A
40	**VENDOR DATA**					
41	**Induction Crucible Furnace**			**3260-FN-0001**	By Others	A
42	Make and Model			**Inductotherm Duraline/VIP**	By Others	A
43	Type			**Hydraulic Tilt**	By Others	A
44	Furnace Electrical Efficiency		**%**	**97% of Frequency Converte**	By Others	A
45	Furnace Power		kW	**300**	By Others	A
46	Operating Temperature		℃	**1164 (100C above Melting Poin**	By Others	A
47	Design Temperature		℃		By Others	A
48	Sludge Melting Rate		kg/hr	**1000 Bronze**	By Others	A
49	Crucible Internal Dim. ID x H		mm x mm		By Others	A
50	Crucible Effective Volume		m3	**0.213**	By Others	A
51	Furnace Capacity		kg/hr iron	**534**	By Others	A

Data Sheet

newgold Rainy River Resources Ltd. amec

Title	**Gold Room Package**			**Proj Doc No.**	**N/A**		
Proj Name	Rainy River			**AMEC Doc. No.**	**100126-3200-DE10-DAT-0213.006**		
Client	New Gold			**Proj No.**	100126	**Rev**	**B**
Supplier		**AWBS No.**		**Plant/Area No.**	3200	**Pkg No.**	PJ0213
Tag No(s).	3260-FN-0001, 3260-XX-0054, 3240-BI-0030, 3260-XX-0056, 3260-XX-0057, 3260-BH-0030, 3260-FA-0036					**Qty**	
Item Desc	Induction Crucible Furnace, Slag Pots, Slag Bin, Cascade Mold Stand, Bullion Molds, Furnace Exhaust Dust Collector and Fan, Water Bath						**Rev**

52	Size of Pours	kg	**1364**	By Others	A
53	Furnace Overall Dimensions H x L x W	mm x mm x mm	**1550 x 1676 x 1384**	By Others	A
54	Furnace ground isolation (describe)			By Others	A
55	**Induction Furnace Materials of Construction:**			By Others	A
56	Body Material		**Steel**	By Others	A
57	Coil Material		**Copper**	By Others	A
58	Crucible Material and Thickness	mm	**Silicon Carbide**	By Others	A
59	Crucible Material Rating	℃		By Others	A
60	Refractory Material and Thickness	mm		By Others	A
61	Refractory Material Rating	℃		By Others	A
62	Insulation Material and Thickness	mm		By Others	A
63	Temp of Furnace External Surface During Operation	℃		By Others	A
64	**Furnace Power Supply:**			By Others	A
65	Make/Model		**Inductotherm VIP**	By Others	A
66	Overall Dimensions, L x W x H	mm x mm x mm	**2542 x 762 x 2542**	By Others	A
67	Input Power	kW	**345 KVA of 480/3/60**	By Others	A
68	Input Current	A		By Others	A
69	Input Frequency	Hz		By Others	A
70	Interconnecting Cable Type & Max. Length	/ m		By Others	A
71	**Furnace Cooling System:**		**Included - Air Cooled Circulated**	By Others	A
72	Total Heat to be Dissipated	kW	**All details To Be Determined**	By Others	A
73	Cooling Water Flowrate	m3/h		By Others	A
74	Cooling Water Pressure	kPag		By Others	A
75	Cooling Solution			By Others	A
76	Water Temperature Delta through Furnace	℃		By Others	A
77	Water Pump Make & Model			By Others	A
78	Pump Electric Motor Manufacturer			By Others	A
79	Motor Power/Speed/Service Factor	kW/rpm/SF		By Others	A
80	Radiator Manufacturer & Model			By Others	A
81	Fan Manufacturer & Model			By Others	A
82	Motor Power/Speed/Service Factor	kW/rpm/SF		By Others	A
83	Expansion / Air Separator Tank Included?	Y/N		By Others	A
84	**Tilting Mechanism Hydraulic Unit**		**3260-HU-0060**	By Others	A
85	Make/Model			By Others	A
86	Pump Make/Model			By Others	A
87	Pump Operating Pressure	kPag		By Others	A
88	Electric Motor Manufacturer			By Others	A
89	Motor Power/Speed/Service Factor	kW/rpm/SF		By Others	A
90	Tilt Pour Control (describe)			By Others	A
91	Pivot Type (describe)			By Others	A
92	**Furnace Exhaust Dust Collector and Fan**		**3260-BH-0030 / 3260-FA-0036**		A
93	Furnace Exhaust Dust Collector Air Flow Required	am3/h	**6796**		A
94	Exhaust Dust Collector Air Flow Pressure	kPag	**405 mm H2O Minimum**		A
95	Exhaust Dust Collector Ducting Size and Type		**Cartridge Style, 285 m2, 3048 x 817 x 3642 mm (LxWxH)**		A
96	Dust Collector Temperature Rating	℃	**135**		

Data Sheet

newgold Rainy River Resources Ltd. amec

Title	**Gold Room Package**			**Proj Doc No.**	**N/A**		
Proj Name	Rainy River			**AMEC Doc. No.**	**100126-3200-DE10-DAT-0213.006**		
Client	New Gold			**Proj No.**	100126	**Rev**	**B**
Supplier		**AWBS No.**		**Plant/Area No.**	3200	**Pkg No.**	PJ0213
Tag No(s).	3260-FN-0001, 3260-XX-0054, 3240-BI-0030, 3260-XX-0056, 3260-XX-0057, 3260-BH-0030, 3260-FA-0036					**Qty**	
Item Desc	Induction Crucible Furnace, Slag Pots, Slag Bin, Cascade Mold Stand, Bullion Molds, Furnace Exhaust Dust Collector and Fan, Water Bath						**Rev**

97					A
98	**Mold Stand**		**3260-XX-0056**		A
99	Make/Model		FLSmidth - Summit Valley		A
100	Number of stages		5 - Cascade		A
101	Stand Outer Dimension	mm x mm x mm	1047 x 882 x 1177		A
102	Deck Size, LxW	mm x mm	171 x 610		A
103	Capacity	kg	>500 kg		A
104	Stand Material		Carbon Steel		A
105	Stand Weight	kg	170		A
106					A
107	**Slag Pot**		**3260-XX-0054**		A
108	Quantity		5		A
109	Capacity per pot	m3	19 liters		A
110	Material		Cast Iron		A
111					A
112	**Slag Bin**		**3260-BI-0030**		A
113	Dimensions, LxWxH	mm x mm x mm	1308 x 800 x 851		A
114	Rated capacity	kg	1818 kg / 0.25 m^3		A
115	Material		Steel		A
116					A
117	**Bullion Molds**		**3260-XX-0057**		A
118	Quantity		20		A
119	Material		Cast Iron		A
120	Capacity	mm3 per mold	150	1000 troy Ounces Gold	A
121	Overall Dimensions, L x W x H	mm x mm x mm	440 x 235 x 152		A
					A
122	**Slag Pot Carrier**		**3260-XX-0055**		A
123	Make/Model		FLSmidth - Summit Valley		A
124	Material		Carbon Steel		A
125					A
126	**Water Bath**		**3260-TK-0064**		B
127	Material		Carbon Steel		B
128	Capacity	m3	0.35		B
129	Overall Dimensions, L x W x H	mm x mm x mm	1300 x 762 x 683		B
130					A
131	**Total Equipment Weight**	kg			A
132	**List Safety Features**				A
133	Site Installation Requirements (describe)				A
134					A
135					A
136					A

Data Sheet

Title	**Gold Room Package**				**Proj Doc No.**	**N/A**			
Proj Name	Rainy River				**AMEC Doc. No.**	**100126-3200-DE10-DAT-0213.006**			
Client	New Gold				**Proj No.**	100126		**Rev**	**B**
Supplier		**AWBS No.**			**Plant/Area No.**	3200	**Pkg No.**	PJ0213	
Tag No(s).	3260-FN-0001, 3260-XX-0054, 3240-BI-0030, 3260-XX-0056, 3260-XX-0057, 3260-BH-0030, 3260-FA-0036							**Qty**	
Item Desc	Induction Crucible Furnace, Slag Pots, Slag Bin, Cascade Mold Stand, Bullion Molds, Furnace Exhaust Dust Collector and Fan, Water Bath								**Rev**

Notes

Unless otherwise agreed in a written contract between AMEC and its client: (i) this AMEC document contains information, data and design that is confidential and may not be copied or disclosed; and (ii) this document may only be used by the client in the context and for the express purpose for which it has been delivered. Any other use or reliance on this document by any third party is at that party's sole risk and responsibility.

FORM

TITLE:	SUPPLIER DOCUMENT FRONT SHEET	DOC. NO.:	DOC-FOR-000037 Rev. 1
PROJECT NAME:	Rainy River Gold Project	PROJECT NO.:	100126-PJ250

STT Enviro Corp	100126-PJ250	Lime System
Company Name	*PO/Contract Number*	*Package/Contract Description*

Catalog Cut Sheets Mechanical Equipment Lime System
Document Title

80	03-Feb-15	Shaun Vieira	Shaun Vieira
Total Number of Pages (Including Front Sheet)	*Submission Date*	*Submitted By - Print Name*	*Supplier Approval - Signature*

Equipment Tag Number(s)

3270-BH-0040		
3270-CV-0050		
3270-FA-0046		
3270-PU-0093		

Secondary SDDRL Code(s)

1143-1-ME-VP-014-1	0	100126-PJ250-D01-0001-001	001
Supplier/Contractor Document Number	*Supplier Rev.*	*AMEC Project Document No.*	*AMEC Issue No.*

Note: This FRONT SHEET is to be used for all non-drawing documents and if the drawing does not have sufficient space for an electronic decal.

Project Review:

Permission to proceed does not constitute acceptance of design, calculations, test methods or materials developed or selected by Seller and does not relieve Seller from full compliance with contractual or other obligations.

- [ ] 1. REVIEWED - NO COMMENT
- [ ] 2. REVISE AND RESUBMIT - WORK MAY PROCEED SUBJECT TO INCORPORATION OF COMMENTS
- [ ] 3. REVISE AND RESUBMIT - WORK MAY NOT PROCEED
- [x] 4. REVIEW NOT REQUIRED - FOR INFORMATION ONLY

AMEC Signature — *Date* Feb 19/15

MECHANICAL EQUIPMENT LIST INDEX TABLE

1. **Lime Silo Dust Collector – STT Enviro Corp – DCC-280 – Tag: 3270-BH-0040**

2. **Lime Silo Activator – Metalfab – BA-4 – Tag: 3270-AV-0001**

3. **Lime Silo Knife Gate – TBA (Clarkson, Technequip or ITT-Fabri)**

4. **Lime Slaker Feed Screw Conveyor – SCC – TBA – Tag: 3270-CV-0050**

5. **Lime Slaker – Sepro – 1.2 x 2.3 - Tag: 3270-MM-0003**

6. **Lime Slaker Wet Scrubber Fan – Quickdraft – Q4CA-1 – Tag: 3270-FA-0046**

7. **Lime Transfer Pump – Sepro – VT40 – Tag: 3270-PU-0093**

8. **Lime Silo Skirt Exhaust Fan – Greenheck – SE1-12-432-A4 – Tag: 3270-FA-0041.**

9. **Lime Silo Skirt Space Heater – Chromalox – LUH-D-10-63-32 – Tag: 3270-HE-0020.**

Tag: 3270-BH-0040
Model: DCC-280

STT ENVIRO CORP

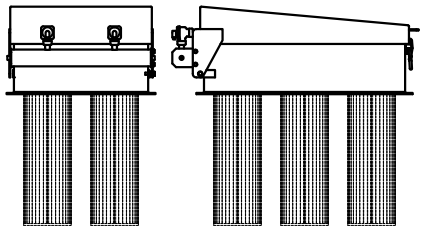

TO CONTACT A STANCO PROJECTS REPRESENTATIVE, PLEASE CALL 1-604-273-6441
OR VISIT US ONLINE AT WWW.STANCOPROJECTS.COM AND WWW.SEMCOTBS.COM

CARTRIDGE BIN VENT

LOW PROFILE STYLE

OUR LOW PROFILE, COST EFFECTIVE AND HIGHLY EFFICIENT CARTRIDGE BIN VENT IS DESIGNED FOR SILO DUST CONTROL

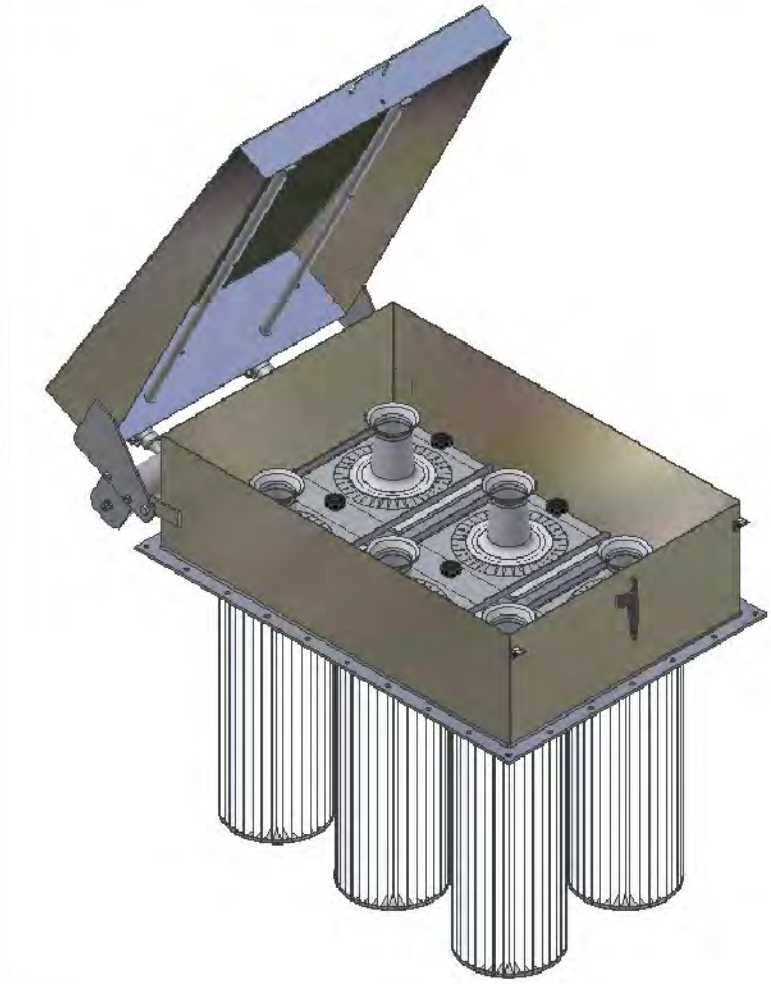

OUTSTANDING FEATURES:
- QUICK ACCESS FOR TOP CARTRIDGE REMOVAL EXTERNAL TO THE FILTER HOUSING
- LOW PROFILE DESIGN PROVIDES EASE OF MAINTENANCE
- MATERIAL OF CONSTRUCTION ARE CARBON STEEL, ALUMINIUM OR STAINLESS STEEL
- STRONG, LIGHTWEIGHT COVER

OPTIONS AVAILABLE:
- SOLID STATE TIMER IN A NEMA ENCLOSURE
- WIDE RANGE OF CARTRIDGE FILTER MEDIA
- DIFFERENTIAL PRESSURE GAUGE OR SWITCH
- HEPA FILTER

Tag: 3270-BH-0040

WE OFFER A COMPLETE LINE OF COMPONENTS FOR BULK MATERIAL HANDLING SYSTEMS WHICH INCLUDES: STORAGE SILOS, ROTARY VALVES, BLOWER PACKAGES, DIVERTER VALVES AND DUST COLLECTORS. DETAILED BULLETINS ON THESE AND OTHERS COMPONENTS ARE AVAILABLE UPON REQUEST OR VISIT WWW.STANCOPROJECTS.COM

6 CARTRIDGES BIN VENT

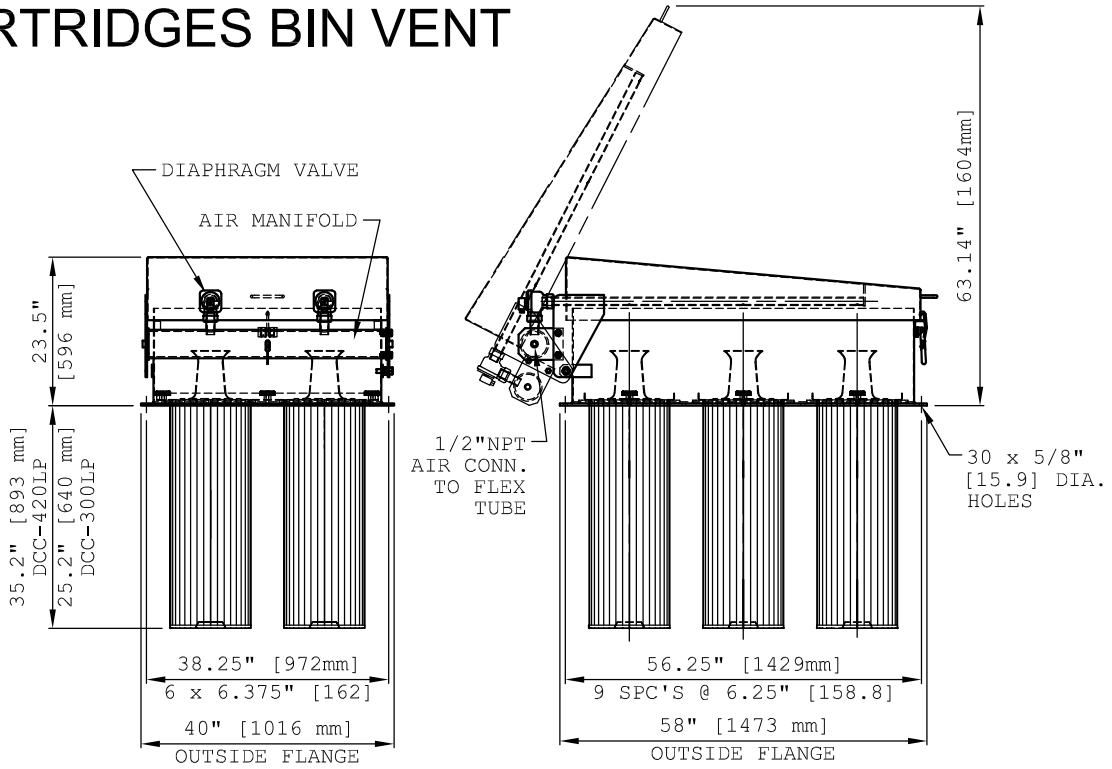

MODEL	FILTER AREA	No. OF CARTRIDGES	SCFM @ 80-100 PSIG	WEIGHT	
				Lb	kg
DCC-300LP	300 Sq.Ft.	6	6	490	225
DCC-420LP	420 Sq.Ft.	6	10	500	230

4 CARTRIDGES BIN VENT

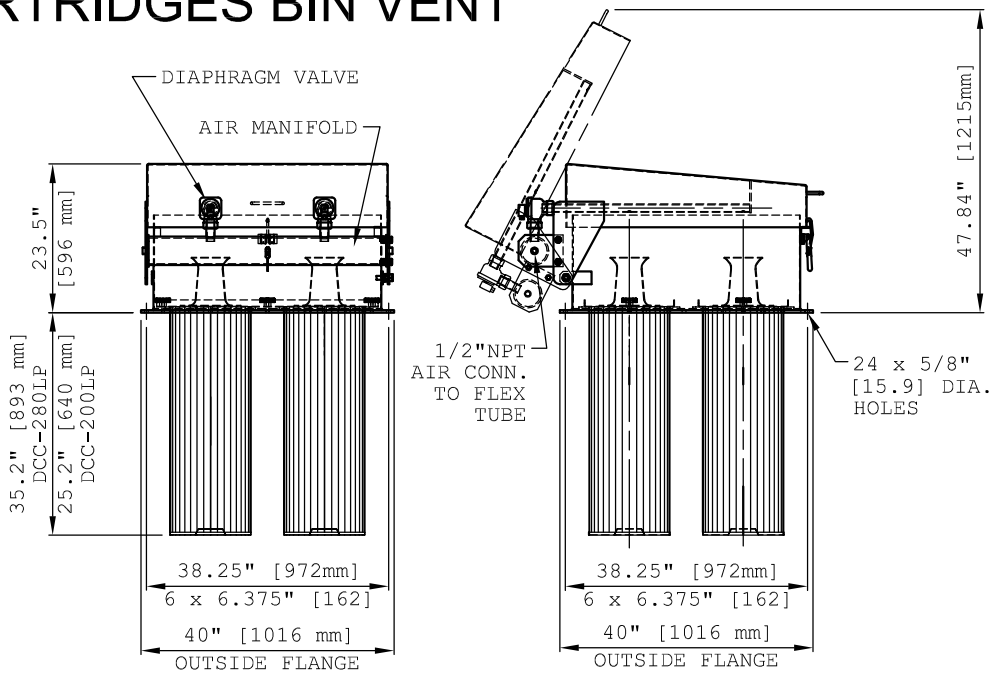

MODEL	FILTER AREA	No. OF CARTRIDGES	SCFM @ 80-100 PSIG	WEIGHT	
				Lb	kg
DCC-200LP	200 Sq.Ft.	4	5	400	181
DCC-280LP	280 Sq.Ft.	4	6	410	185

Tag: 3270-AV-0041
Model: BA-4

Metalfab, Inc.

Bin Activators

Metalfab

Tag: 3270-AV-0001

THE METALFAB BIN ACTIVATOR

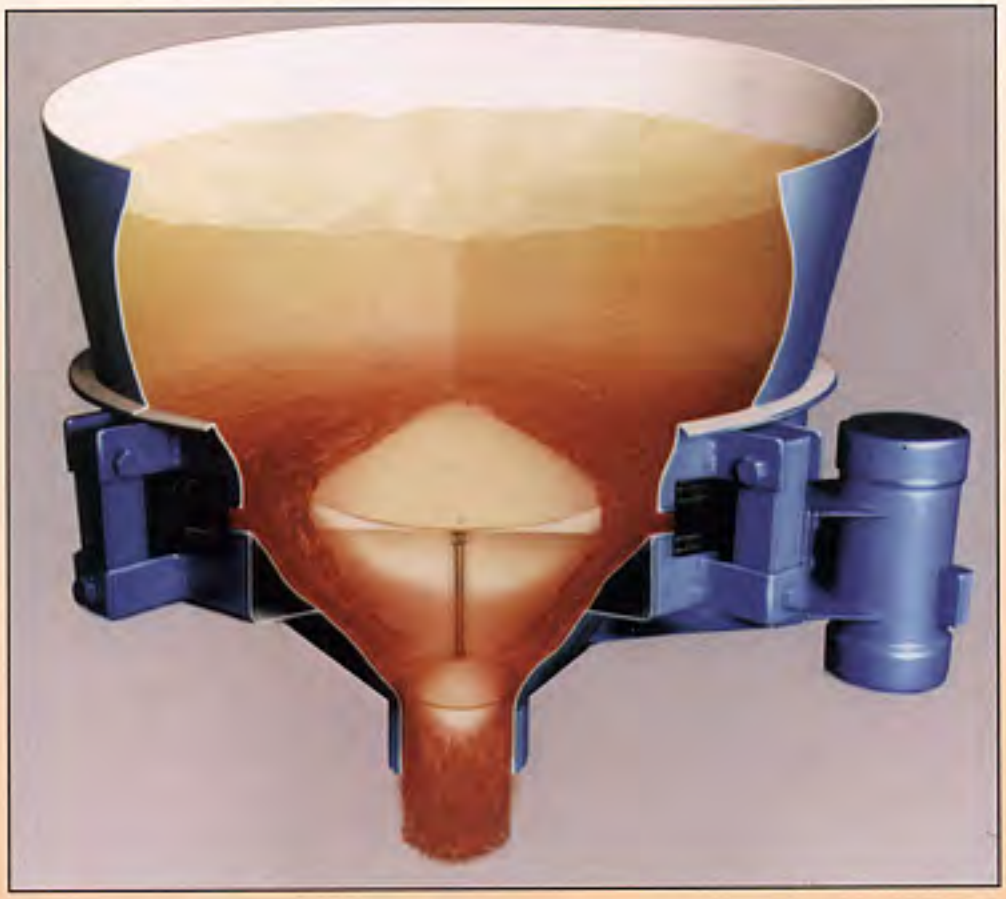

Metalfab engineers have been involved with the design of bin activators from the time of their conception to their more sophisticated present day design.

Through years of testing and innovation, our skilled engineers have developed the Metalfab Bin Activator, a unique system that eliminates the problems associated with the design and performance of other bin activators.

Metalfab Bin Activators are built to withstand the repetitive forces of vibration and forces induced by the product load above them.

The unit's true conical shape is efficient for promoting flow of product with minimum force requirements. This reduction in force means minimum horse power consumption, which results in lower operating costs for users. Plus, it adds to the life of the unit.

The primary baffle is cone shaped to provide maximum motion to the product. This self-cleaning baffle is supported by tubular cross members, which provide the required strength to support product head loads. It gives stiffening strength which accepts the force produced by the vibrator and also provides a proper welding surface for securing the baffle.

Metalfab is the only manufacturer of bin activators that has a secondary adjustable baffle. With other bin activators, often the force required to activate product in the bin is in excess of the force required to discharge product from the bin activator outlet. When this happens, the product compacts, jams and flow stops. The Metalfab secondary baffle is suspended from the cross members which support the primary baffle. The lower section of the suspension member is a threaded rod which allows the baffle to be adjusted vertically.

Because of the Metalfab suspension system, the secondary baffle moves at a different amplitude then that of the bin activator body. Therefore, it creates motion in the product at the outlet and allows product to flow freely. In essence, it acts as a bin activator within a bin activator.

The flexible connection between the stationary section and the vibrated section is of neoprene construction (as standard). It is $^{7}/_{16}$" thick with three plies of nylon reinforcement made in an endless configuration. Externally the sleeve is 50 durometer and has two raised edges which prevent the sleeve from slipping out from under the clamps.

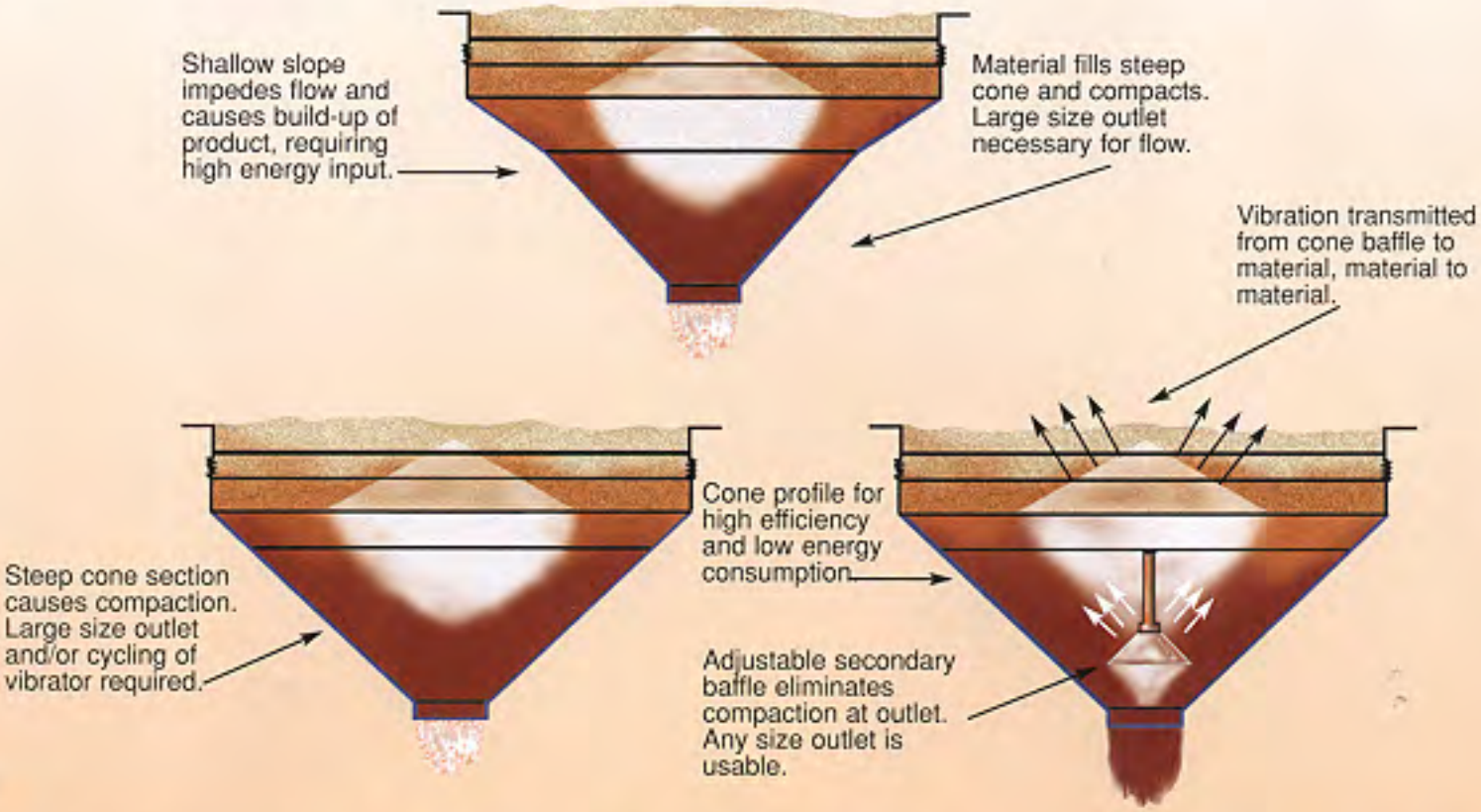

Internally it is 30 durometer construction which allows it to seat firmly on $^{3}/_{16}$" dia. beads welded to the bin activator rings.

The clamps holding the sleeve are 1" wide x 16 gage stainless steel strapping with telescopic type take-ups. This allows for take-up with no pinching of the sleeve. Multiple take-ups are used to achieve equal clamping of the sleeve.

The suspension system is designed to take the head load of product on the bin activator, allowing it to move freely through its vibrator amplitude. In addition, it maintains the bin activator on center. The system consists of a solid block of steel with holes bored in each end at 90° to each other. Vibration isolators are pressed into the holes and hardened bolts fasten the suspension arms to the bin activator. Because of the 90° bolting, the bin activator cannot be forced off center. This eliminates the possibility of the flexible sleeve being loosened and product being lost from the bin.

The vibrator or power source for the Metalfab Bin Activator is a unitized design. It is a motor equipped with oversized roller bearings and is built to withstand the rigors of vibration. Eccentric weights are clamped to the motor shaft. There are two weights on either side of the motor which allow force settings from 0 to maximum in stepless increments. A calibrated dial is fixed to the weights to provide ease of adjustment. The weight sections are covered with cast or spun covers secured by bolts and have an "O" ring seal.

All Metalfab Bin Activators are supplied with a mounting ring which can either be welded or bolted to the bin. This arrangement allows for factory welding of all mounting brackets which maintains alignment of the support system.

Metalfab Bin Activators are available in carbon steel, stainless steel and a wide variety of coatings.

Unique Metalfab design features.

Solid steel hanger arm.

Machined hole is perfectly round. Allows for equal rubber contact throughout.

Forgings or castings have crowns in the center.

Remains on center, even under abnormal load conditions.

Parallel bolted arms can act like a pendulum under abnormal load conditions.

Steel block hanger arms

Since the hanger arms which link the bin activator to the bin proper must carry the combined weight of the bin activator itself and the material in the bin while under vibration, it is essential that the arms be designed and fabricated of the most durable, and dependable materials.

To provide maximum strength under the most severe operating conditions Metalfab hanger arms are made from a solid block of steel up to 3½" square, rather than cast or forged. Bushing holes are machined through the steel and then press fitted with an isolator, providing a large area of rubber to steel contact for maximum vibration isolation.

Unlike forgings or castings, these machined holes have no "crowns" which cause the isolator to extrude, and require frequent replacement. In addition, isolators are arranged at 90° to each other, in order to assure positive alignment of the bin activator from excessive movements, which could lead to material leakage or metal-to-metal contact.

Durable, continuous sleeve

3 ply, continuous sleeve

The sleeve which seals off the gap between the Metalfab bin activator and the non-vibrating mounting ring is designed to eliminate spillage or the release of fine particles into the air. The sleeve being 7/16" thick, with three plys of reinforcement, it is virtually puncture proof. Raised edges on the endless sleeve prohibit it from being pulled out from under the clamps.

Raised edges prevent leakage

Metalfab's unmatched design provides for long sleeve life. Special flanged and bolted sleeve arrangements are available for pressures to 14.9 PSI.

Special flanged/bolted sleeve arrangement

Unitized vibrator motor

The Metalfab vibrator motor assembly consists of both the motor itself and an eccentric weight system packaged into a single, ruggedly built dual voltage unit which is designed to give years of trouble-free service.

The heavy duty, spherical, roller-type bearings are sealed—eliminating the need to remove the unit from the area when making force adjustments. The four eccentric weights are clamped directly to the specially designed motor shaft and can be adjusted, in place, in stepless increments.

All components are completely enclosed. All motors are unconditionally guaranteed for thirty months. Explosion-proof units are also available.

Dimensions of standard bin activators.

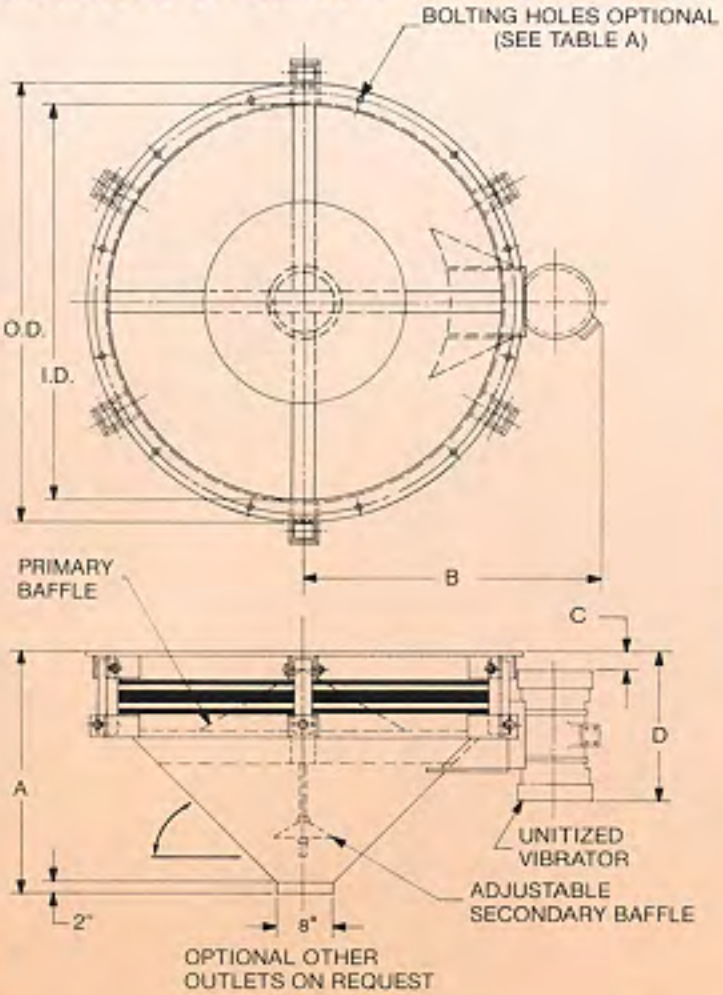

Table A

DIA		HOLE REQUIREMENTS
2'	(8)	11/16 DIA HOLES EQ SP ON A 26 3/4 DIA B.C.
3'	(12)	11/16 DIA HOLES EQ SP ON A 38 3/4 DIA B.C.
4'	(16)	11/16 DIA HOLES EQ SP ON A 51 DIA B.C.
5'	(16)	11/16 DIA HOLES EQ SP ON A 63 DIA B.C.
6'	(24)	13/16 DIA HOLES EQ SP ON A 75 1/2 DIA B.C.
7'	(30)	1 1/8 DIA HOLES EQ SP ON A 87 1/2 DIA B.C.
8'	(36)	1 1/8 DIA HOLES EQ SP ON A 99 1/2 DIA B.C.
10'	(36)	1 1/8 DIA HOLES EQ SP ON A 123 DIA B.C.
12'	(40)	1 1/8 DIA HOLES EQ SP ON A 147 DIA B.C.

DIA	O.D.	I.D.	A.	B.	C.	D.	NO. OF HANGERS	T.E.N.V. HP
2'	26 1/2	23 1/2	16 1/2	22	2 1/4	15 3/4	4	1/2
3'	41 3/4	35 3/4	22 5/8	31 3/4	2 3/4	16 1/4	3	1 1/2
4'	53 1/4	47 1/4	29 1/2	35 1/4	4 1/8	22 7/8	4	1 1/2
5'	65 1/4	59 1/4	36 3/16	41 1/4	4 1/8	22 7/8	4	1 1/2
6'	79 1/4	71 1/4	43 1/8	49 1/16	3 11/16	27 13/16	6	3
7'	91 1/4	83 1/4	50	55 1/4	5 1/8	28 3/8	6	3
8'	103	95	56 7/8	61 1/2	7 7/8	29 1/4	8	3
10'	127	119	70	77 11/16	10 7/8	34 1/16	16	4
12'	151	143	81	92 1/4	11 1/8	44	20	6

Optional Maintenance Gate

This optional gate consists of a separate metal slide, metal gate housing and a rubber seal held in place with a worm-type screw clamp. This option adds 5 1/4" to the overall height of the bin activator and is an extension of the bin activator's normal outlet collar (not a flange fitted item).

Sanitary Bin Activator

All the hoppering features of our standard steel bin activators plus the following:

A. All internal welds to be continuous heliarc welded...welds ground smooth.
B. All contact surfaces polished to #4 finish.
C. Secondary baffle support without threads.
D. Primary baffle raised 2" off the cross members.
E. Round cross members with enclosed corners.
F. White neoprene main sleeve.
G. Exterior stainless steel surfaces "bead blasted".

Additional features for USDA 3A Dairy Approval

A. All contact welds ground smooth and to have the minimum required radius.
B. Bolted and gasketed access port on the lower cone section of the bin activator.

Bin Activators

Metalfab, Inc.
Dry Solids Processing Equipment
P.O. Box 9, Prices Switch Road,
Vernon, NJ 07462
(973) 764-2000
Fax (973) 764-0272
email:metalfab@metalfabinc.com

Quality Screw Conveyor Systems and Components

Tag: 3270-CV-0050
Model: 150mm x 8m lg

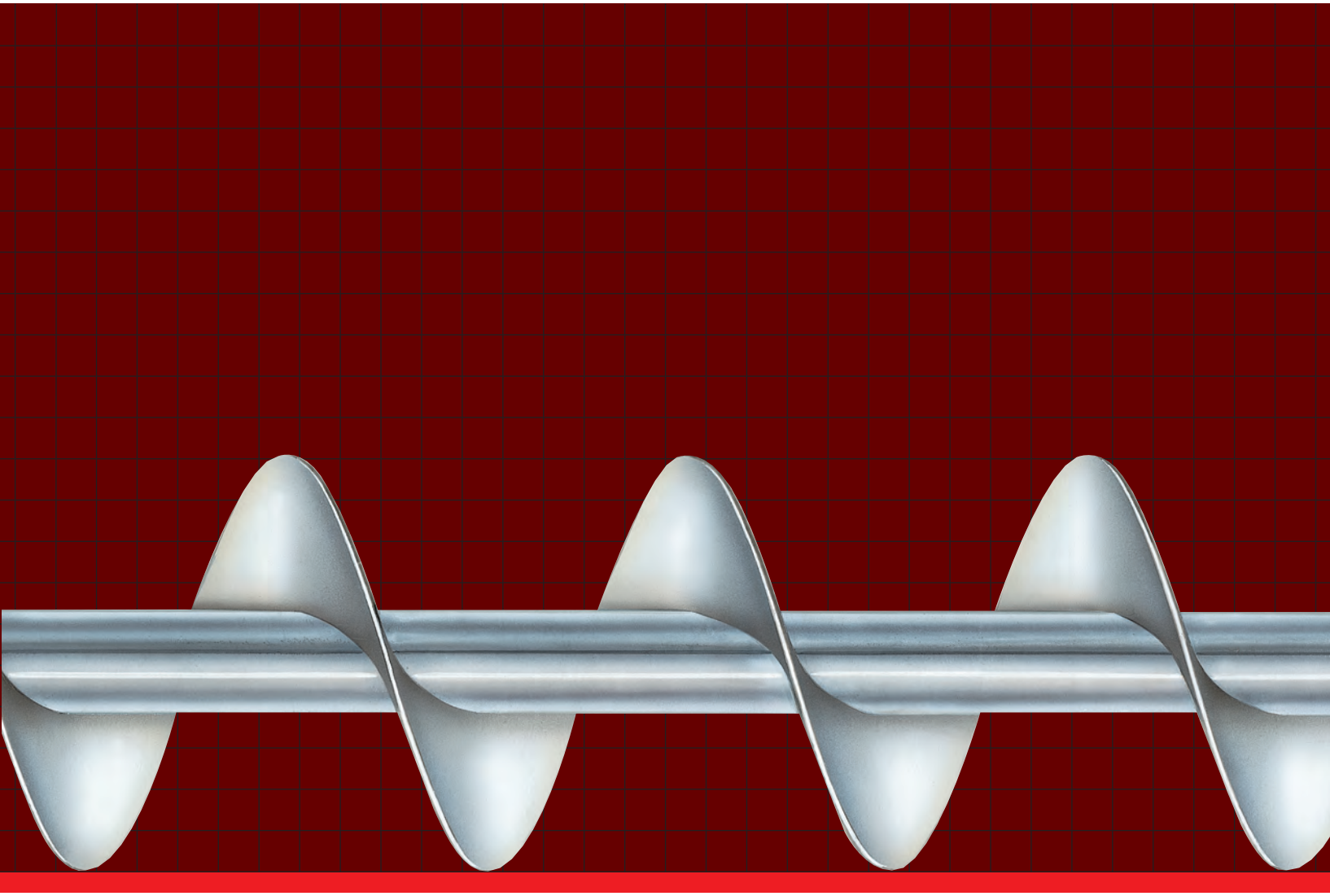

THE EXPERIENCE TO HANDLE IT RIGHT!®

Screw Conveyor Corporation®

Quality Screw Conveyor Systems and Components Are

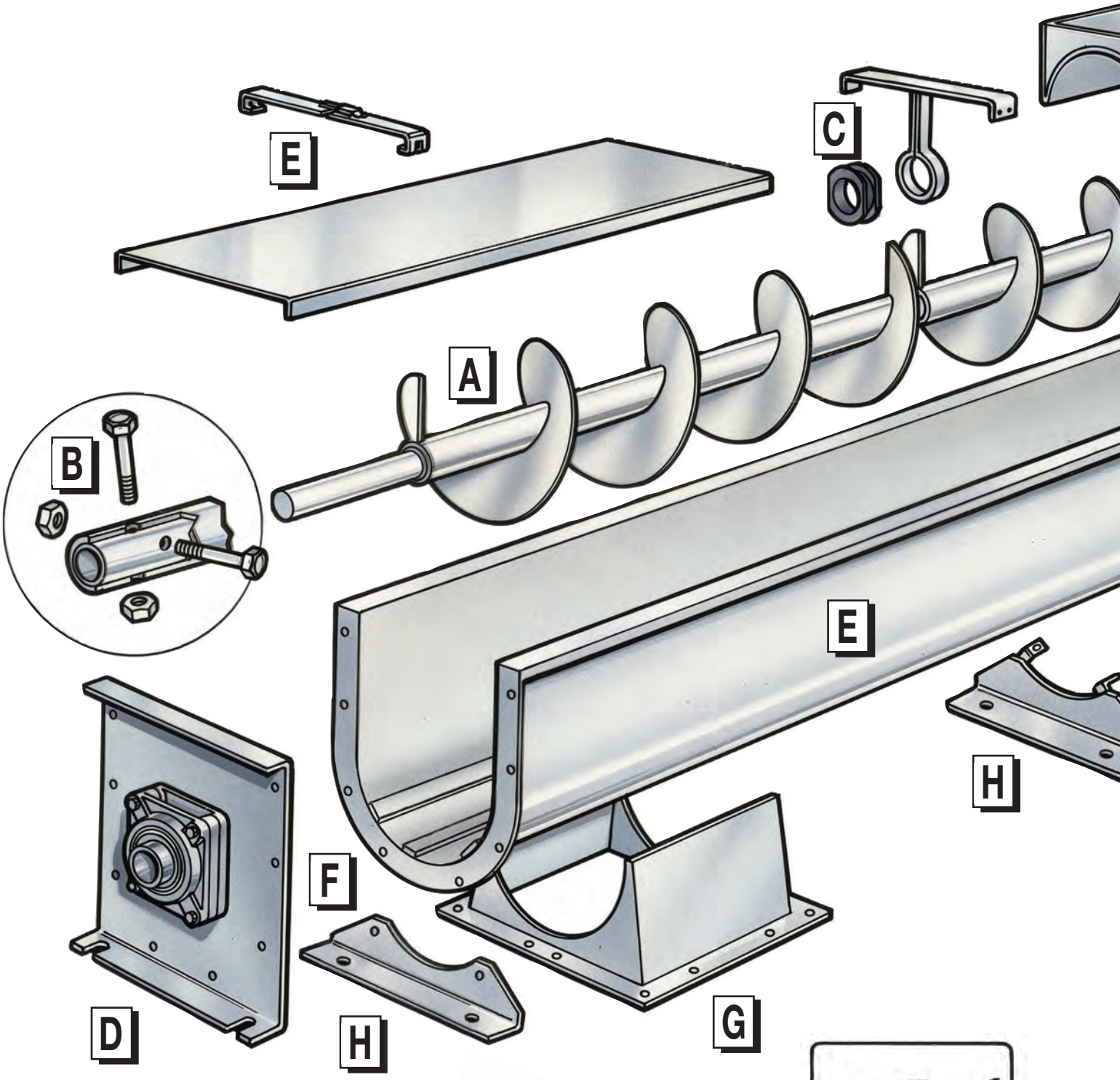

Please refer to Screw Conveyor Corporation Engineering Manual and related current price list for complete details and part numbers.

CEMA
CONVEYOR EQUIPMENT MANUFACTURERS ASSOCIATION

(Note: Applicable CEMA standards are used throughout the product line.)

© Copyright 2012 – Screw Conveyor Corporation, Hammond, Indiana

® Registration Trademark of Screw Conveyor Corporation, Hammond, Indiana

Available in a Wide Range of Designs and Materials.

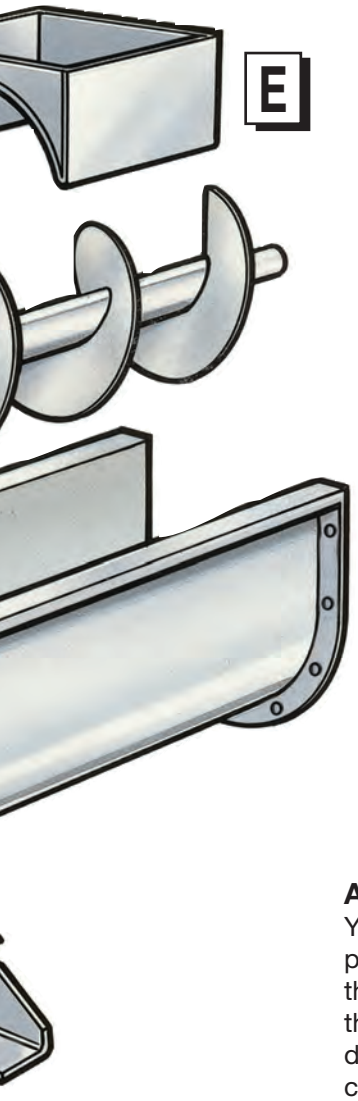

CARBON STEEL, STAINLESS STEEL, AND GALVANIZED STEEL ARE INVENTORIED AND READY FOR IMMEDIATE DELIVERY!

A WIDE CHOICE OF STANDARD PARTS

You get the system you need to solve your problem — yet keep cost at a minimum. Select the type of component from our standard line that fits your needs. For special flighting designs to solve a particular problem, please consult with one of our four sales offices.

A **Conveyor Screw:** Compact, manufactured straight and accurate in helicoid, sectional, ribbon and special designs to meet your requirements.

B **Job-Rated Components**: Selected to meet the performance required. Precisely worked to insure a longer lasting, truer running unit.

Jig-Drilled Couplings: Assures easy shaft alignment and assembly. Available with "Redi-Change" clamping key for quick disassembly of conveyor screw.

Tem-U-Lac Self-Locking Coupling Bolts: Guards against system damage and costly down-time caused by coupling bolts or nuts working loose.

C **Hangers and Bearings:** Various styles and bearing materials selected to meet your needs.

D **Trough Ends:** Several bearing and seal styles are available to match your needs.

E **Troughs, Covers, Clamps and Shrouds:** Ruggedly constructed standard "U" and other styles of troughs including tubular. Covers, clamps and shrouds available for all applications.

F **Nu-Weld® Flange:** Continuously welded steel flange holds trough in alignment.

G **Discharge Spouts:** All types available... located where you need them...with hand, electric, hydraulic or pneumatic powered gates.

H **Supporting Feet and Saddles:** Align and fasten the trough to the floor or existing structure.

A WIDE CHOICE OF MATERIALS

Stainless Steel Screw Conveyors are ideal for use in the food, pharmaceutical, chemical and virtually all other industries where sanitation, corrosion or extreme temperatures are a problem. Stainless steel conveyor screw and parts are manufactured to the same specifications as standard mild steel. Any analysis of stainless steel can be used in the construction of your screw conveyor. Stainless accessories such as hangers, troughs, etc. are also available.

Corrosion Resistant Conveyor Screws may be made of special resistant metals such as stainless steel, Monel, Inconel, Cor-Ten, etc. They also may be hot dip galvanized for protection against mild corrosion.

Wear Resistant Conveyor Screws and accessories can be furnished in 40/50 carbon A.R. steels, T-I nickel steel, Hardox 400 or can be coated with Postalloy, Stellite, Airco, etc.

Conveyor Screws and Flights–Hangers and Bearings

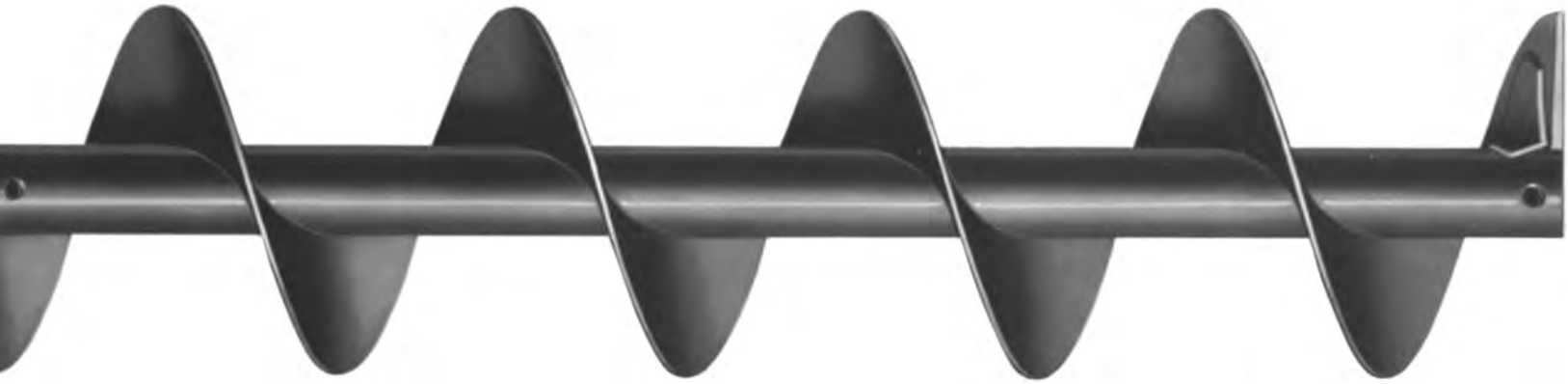

HELICOID CONVEYOR SCREWS UP THRU 20"

FLIGHTS FOR SECTIONAL CONVEYOR SCREWS UP THRU 30"

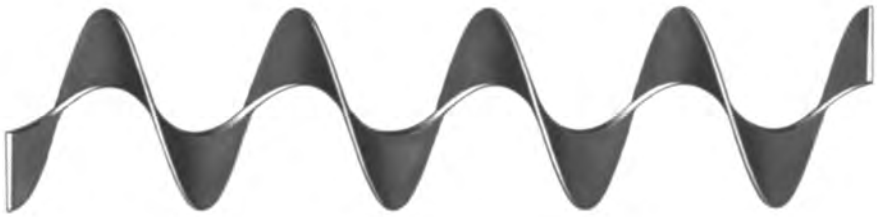

FLIGHTING FOR HELICOID CONVEYOR SCREWS

RIBBON CONVEYOR SCREWS

We have all the pieces to put together an answer to your bulk material conveying problem. Screw conveyors handle almost any bulk material efficiently and they do it economically compared to other methods. Compact, they fit into tight places, with moving parts enclosed. They're easy to install and simple to maintain. You can run them horizontally, on an incline, and, with our Screw-Lift®, straight up.

We can meet your application needs in helicoid and sectional flight types with adaptations including ribbon, special pitches and tapered – in various gauges of steel, stainless steel and other alloys, including hardened flight surfaces.

Whether your need is for components or a complete system, you can rely on our years of experience in the engineering and manufacturing of screw conveyors. Consult our experienced personnel without obligation.

REDI-CHANGE QUICK DISCONNECT CONVEYOR SCREWS

The Redi-Change feature allows you to perform conveyor screw changes and repairs without dismantling the entire conveyor. This feature is available on all types of conveyor screws (not available in 1" shafts).

COUPLINGS

TEM-U-LAC® COUPLING BOLTS

PIPE BUSHINGS

FORMED STEEL LUG FOR DISCHARGE END

FORMED STEEL LUG FOR FEED END

END LUGS

SPECIAL CONVEYOR SCREW DESIGNS

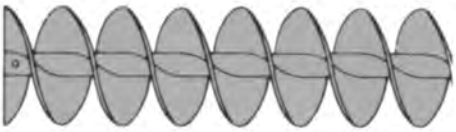

DOUBLE FLIGHT

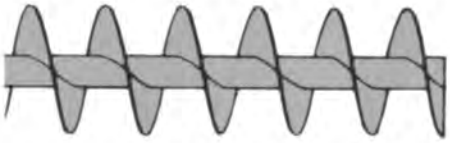

SHORT PITCH

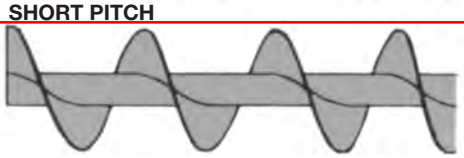

VARIABLE PITCH

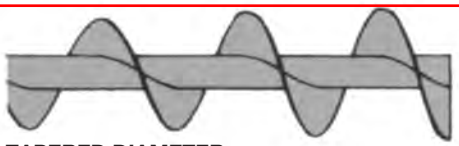

TAPERED DIAMETER

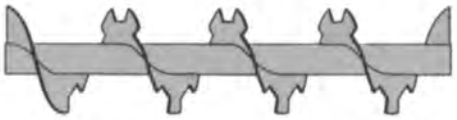

CUT FLIGHTS

CUT AND FOLDED

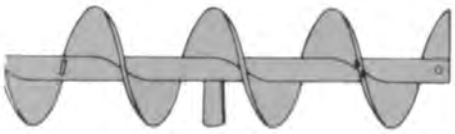

MIXING PADDLES (welded or adjustable)

PADDLE CONVEYOR

HANGERS AND REPLACEMENT HANGER BEARINGS

The style 226-Hanger is the most popular since it mounts completely inside the trough and is more suitable for use with dust tight or weather tight covers.

Standard bearings are Babbitt, hard iron, wood, bronze and nylon or Nylatron. Available on special order are Ni-Hard, Bronze Oilite, Gatke, Stellite Bushed, Teflon and many other bearing materials.

STYLE NO. 220

STYLE NO. 226

STYLE NO. 260

STYLE NO. 230

STYLE NO. 270

STYLE NO. 216

EXPANSION
STYLE NO. 326

FLARED TROUGH HANGER

BEARING FOR
STYLE 220, 226, 326 HANGER

BEARING FOR
STYLE 216, 230 HANGERS

BEARING FOR
STYLE 260, 270 HANGERS

Troughs and Trough Ends

Troughs are available in sizes up to 30" and in gauges up to 3/8" thick. They can be formed of stainless steel or other alloys. Nu-Weld® end flanges are continuously jig-welded on each end to assure alignment and tight connecting joints. If supporting feet are needed, they are spaced at the flange joints. Trough saddles are also available.

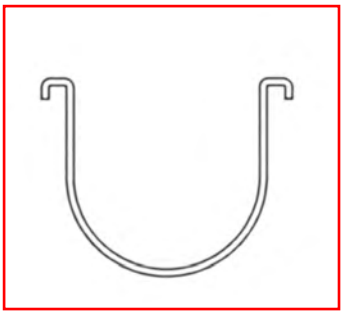

DOUBLE FLANGED TROUGH

ANGLE TROUGH

SINGLE FLANGED

SPECIAL TROUGH DESIGNS

FLARED TROUGH

CHANNEL TROUGH

JACKETED TROUGH

DROP BOTTOM TROUGH

Troughs may be furnished in a variety of materials including stainless steel, galvanized, monel or other alloys. Covers are usually bolted on or furnished with screw or spring clamps and may be flat for interior or hip roof for exterior installations. Piano hinges are also available.

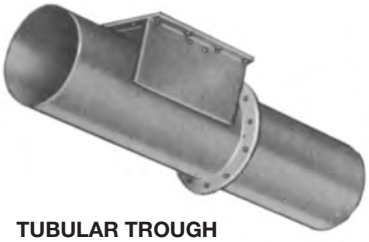

TUBULAR TROUGH

TROUGH END DESIGNS

DISCHARGE TROUGH END
STYLE NO. 104 AND 107

BOLT ON SHELF
(Bolts to existing trough ends)

STYLE NO. 100

STYLE NO. 101

FLARED TROUGH END
STYLE NO. 114 AND 115

CHEVRON ROLLER BEARING END THRUST WITH TROUGH END

ANTI-FRICTION STYLE NO. 102
PICTURED WITHOUT SEAL

ANTI-FRICTION STYLE NO. 103
PICTURED WITH PACKING SEAL

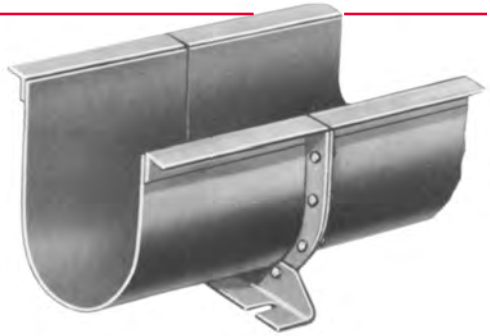

NU-WELD® END FLANGE
Nu-Weld® end flanges are made of heavy-gauge steel to assure close accurate fit with the conveyor trough and the trough ends of the following end flange. Bolt holes are jig-punched to assure accurate alignment.

SADDLES AND FEET

TROUGH END DUST SEALS

Trough Covers – Shrouds – Cover Clamps

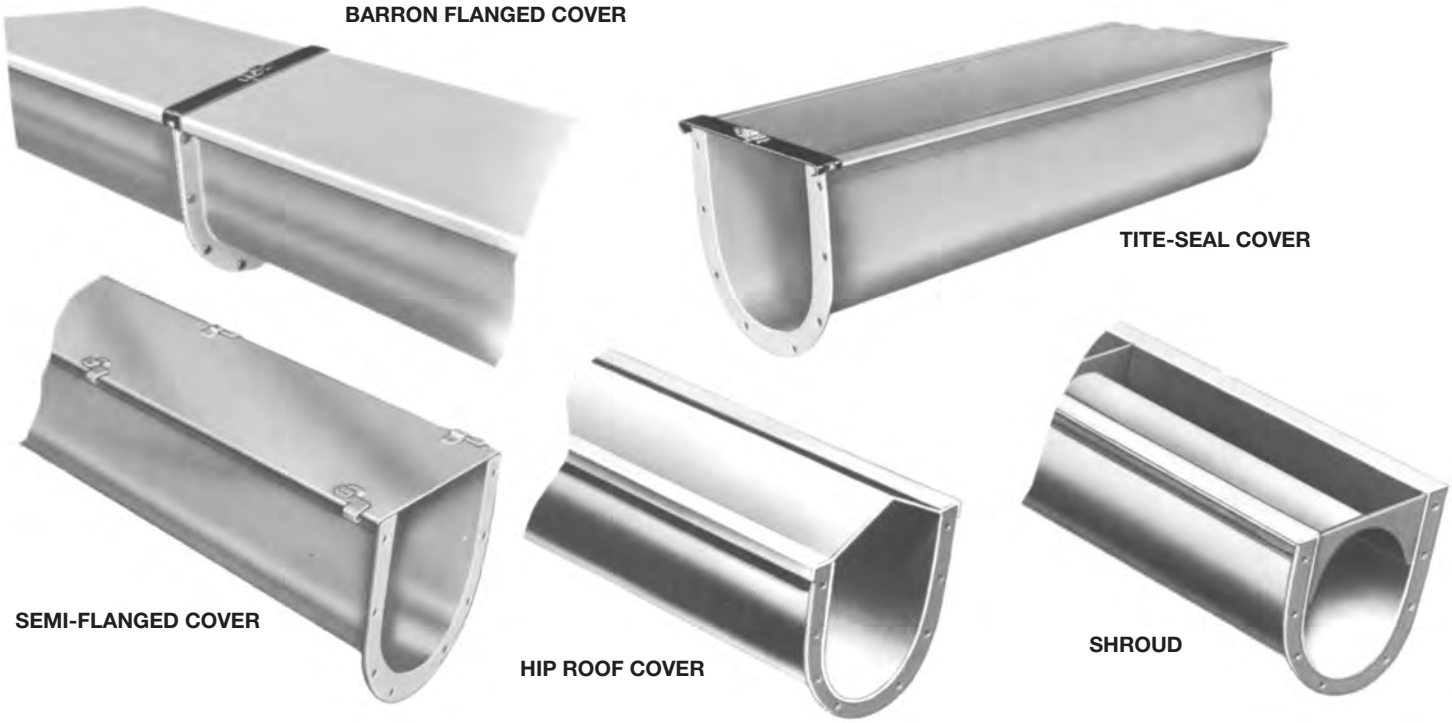

Note: Standard designs are not intended to be weather, rain, air, or pressure tight. For special design requirements, contact your nearest sales office.

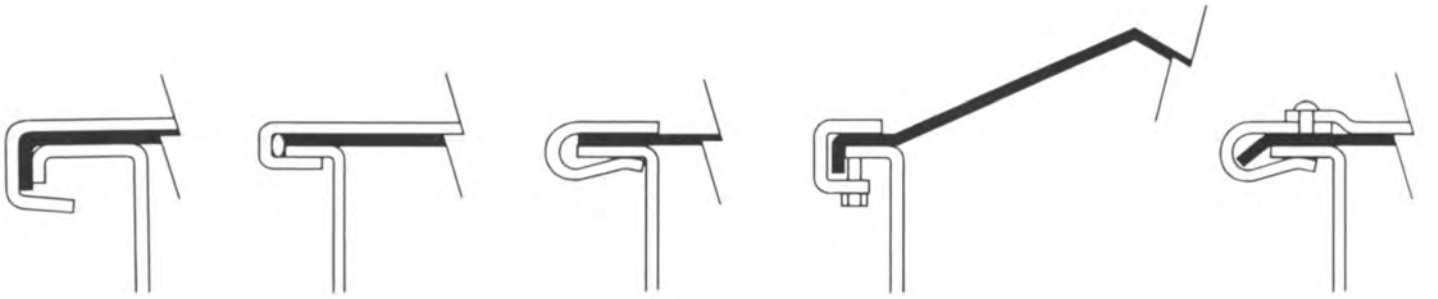

BARRON®® COVER CLAMP | TITE-SEAL COVER CLAMP | CONTINUOUS COVER CLAMP | SCREW COVER CLAMP | SPRING COVER CLAMP

TROUGH COVER CLAMPS

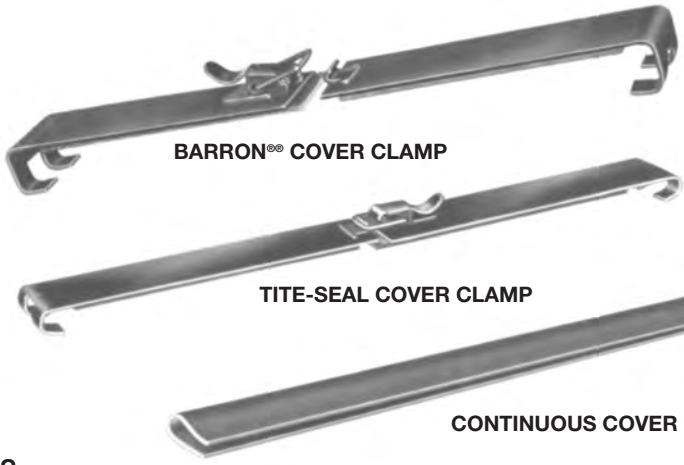

BARRON®® COVER CLAMP

TITE-SEAL COVER CLAMP

CONTINUOUS COVER CLAMP

SCREW COVER CLAMP

SPRING COVER CLAMP

Feed and Discharge Spouts

PLAIN FEED OPENING

DISCHARGE WITH FLAT-HAND SLIDE

PLAIN DISCHARGE

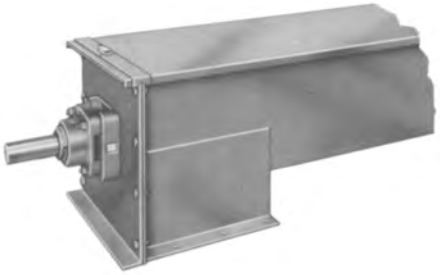

FLUSH END DISCHARGE

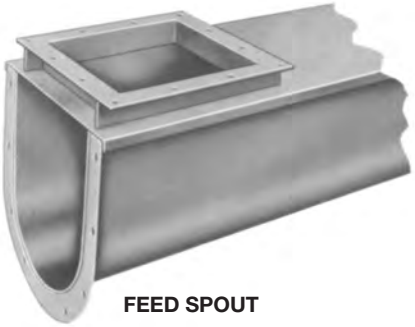

FEED SPOUT

DISCHARGE WITHOUT SLIDE

RACK AND PINION GATES

Rack and pinion gates have cut tooth racks welded to the slide plate. This engages a cut tooth pinion mounted on a pinion shaft. Gate may be operated by hand wheel, chain wheel or power operated by electric motors, air or hydraulic cylinders.

FLAT SLIDE

CURVED SLIDE

Screw Conveyor Corporation–Your One Source Supplier

QUALITY COMPONENTS IN STOCK AND READY FOR FAST DELIVERY!

Screw Conveyor Corporation has a vast stock of quality components at four major locations across the country. We are committed to supporting the inventory position of our nationwide network of distributors. This commitment assists them in meeting the demands of their customer base with on-time delivery of high quality Screw Conveyor components and replacement parts.

From standard inventory to custom work, we've grown by answering our customer's needs. And we offer it all..concept, engineering, manufacturing and service.

The photos shown on this page represents a cross section of the quality components and replacement parts in stock at three key locations nationwide.

Screw Conveyor Safety Practices

TO AVOID UNSAFE OR HAZARDOUS CONDITIONS, THE FOLLOWING MINIMUM PROVISIONS MUST BE STRICTLY OBSERVED.

1.(A) **SCREW CONVEYORS SHALL NEVER BE OPERATED UNLESS THE CONVEYOR HOUSING COMPLETELY ENCLOSES THE CONVEYOR MOVING ELEMENTS.** All necessary housings, covers, safety guards, railings, gratings and power transmission guards must be in place. If the conveyor is to be opened for inspection, cleaning or observation, the motor driving the conveyor is to be locked out electrically in such a manner that it cannot be started by anyone, however remote from the area unless the conveyor housing has been closed and all guards are in place. **THE HOUSINGS, COVERS AND GUARDS ARE NECESSARY TO PREVENT ANYONE FROM ENTERING, REACHING, OR FALLING INTO THE MACHINERY, WHICH MAY RESULT IN SERIOUS PERSONAL INJURY.**

(B) If the conveyor must have an open housing as a condition of its use, the **entire open conveyor is then to be guarded by a railing, fence or rugged safety grating.**

(C) Feed openings for shovel, front end loader or other mechanical equipment shall be constructed in such a way that the conveyor is covered by a rugged grating. If the nature of the material is such that a grating can't be used, **then the exposed section of the conveyor is to be guarded by a railing and there shall be warning signs posted.**

2. **DO NOT PLACE HANDS OR FEET IN ANY CONVEYOR OPENING, TO AVOID BEING CAUGHT BETWEEN THE ROTATING CONVEYOR SCREW AND THE CONVEYOR HOUSING.**

3. **DO NOT WALK ON CONVEYOR COVERS OR GRATINGS OR POWER TRANSMISSION GUARDS, TO AVOID FALLING INTO OR AGAINST THE ROTATING CONVEYOR SCREW.**

4. **DO NOT** poke or prod material in the conveyor with a bar or stick, **to avoid being struck by the bar or stick.**

5. **DO NOT** overload conveyor or use it for anything but its intended use.

6. **DO** practice good housekeeping

A copy of Screw Conveyor Safety and Service Instructions are shipped as part of every order.

THE EXPERIENCE TO HANDLE IT RIGHT!®

Screw Conveyor Corporation®

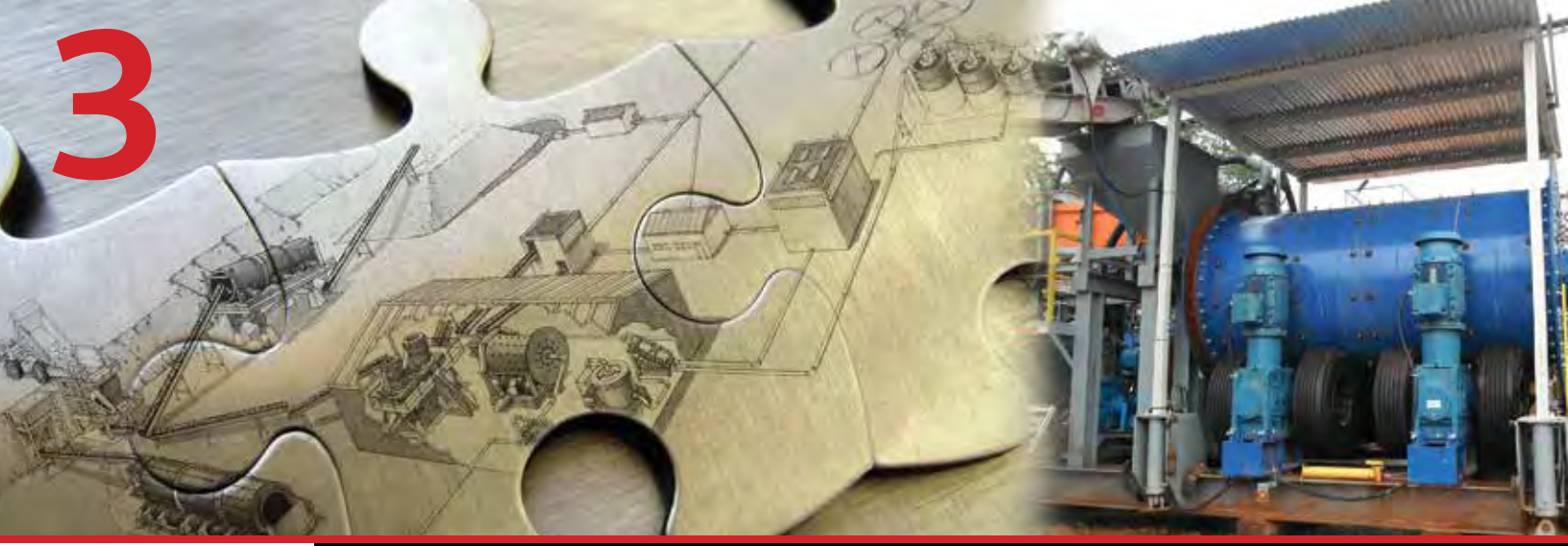

SEPRO TYRE DRIVE GRINDING MILLS

Tag: 3270-MM-0003

APPLICATONS

- Small tonnage plants – primary grinding
- Regrinding mills
- Reagent prep
- Lime slaking

KEY ADVANTAGES

- Short delivery times
- Low installation costs with no heavy foundation requirements
- No critical components such as ring gears, chain drive, steel wheels or trunnion bearings
- Standard, off-the-shelf major components to minimize any downtime
- Commercial heavy truck tyres that can easily be sourced locally
- Units are all pre-assembled and shop tested
- Rubber shell liners and lifters for long life and ease of replacement
- Shell supported design allows for quick and efficient maintenance
- Various configurations available (overflow or grate discharge)

SHORT DELIVERIES AND LOW CAPITAL COST

Sepro Tyre Drive Grinding Mills are a reliable solution for small and medium capacity grinding applications, and are suitable for Ball, Rod and Pebble charges. Mills come complete with a variable frequency drive (VFD) package which allows you to fine tune the operation of the mill based on the charge and application. No auxiliary drive is required to perform maintenance, which is done quickly with minimal heavy lifting due to the simple removal of the grate or discharge head to access the mill internals. Sepro Mill shells are manufactured in one piece to high quality standards and are thermally stress relieved to eliminate localized high stress areas.

The machine utilizes the Sepro Pneumatic Tyre Drive System (PTD) which provides an alternative to standard trunnion supported mills. This system of rubber tyres mounted on independent gear boxes provides excellent serviceability and reliability, having been well proven in numerous difficult applications. An instrumental feature accompanying Sepro's tyre driven equipment is the tyre pressure monitoring system (TPMS) which comes standard with each Sepro rotary control console.

Pilot scale mills are also available for pilot plant and laboratory use.

SEPRO TYRE DRIVE GRINDING MILLS

Tag: 3270-MM-0003
Model: 1.2 x 2.3

STANDARD MILL SIZES

DIA. X L (m)	INSTALLED POWER (kW)
1.05 x 1.4	18
1.2 x 2.3	37
1.5 x 3.0	75
1.8 x 3.6	150
2.1 x 4.0	220
2.1 x 6.0	330

1.8 x 3.6 Sepro Ball Mill

Sepro Pneumatic Tyre Drive System (PTD)

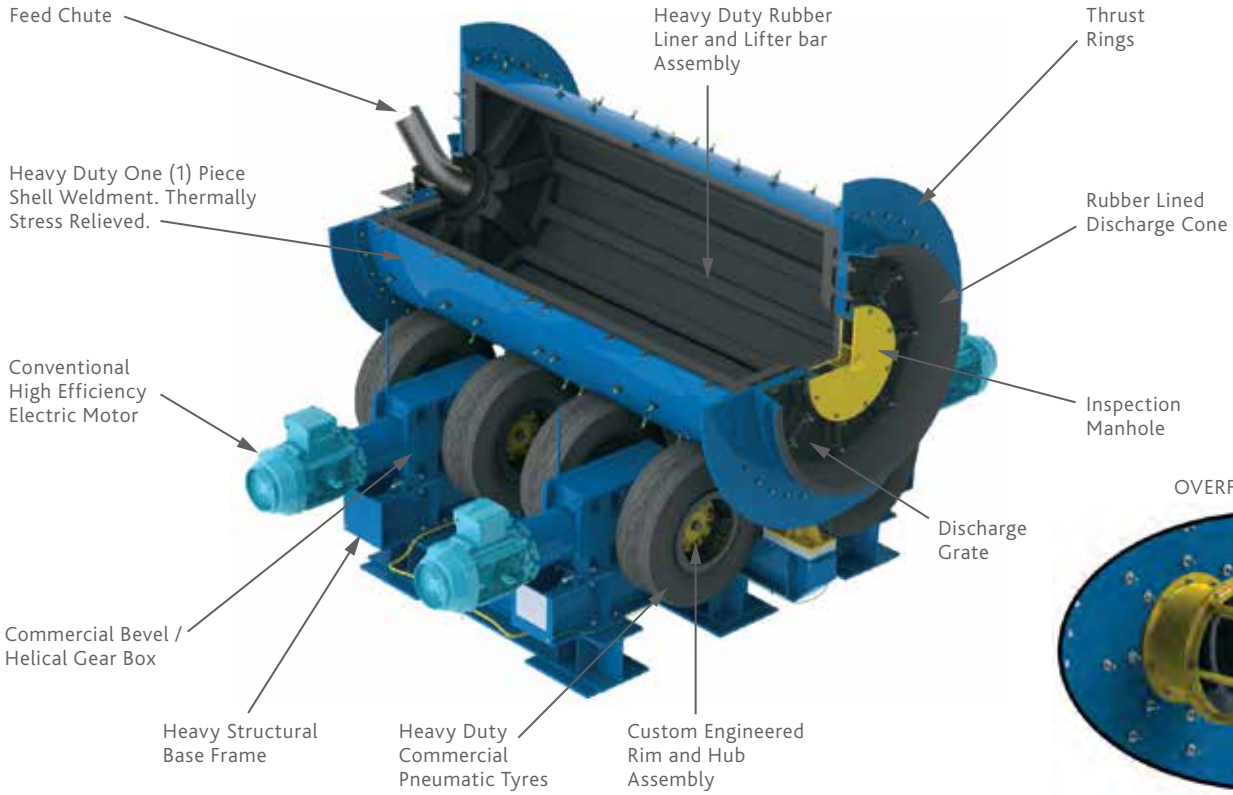

OVERFLOW VERSION

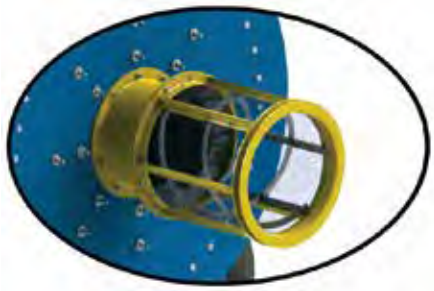

Sepro Mineral Systems Corp.
9850 201 Street, Langley, British Columbia, Canada V1M 4A3
Office: +[1] 604.888.5568 • *Fax:* +[1] 604.888.5521 • *Toll free:* +[1] 800.990.5568 North America
sepro@seprosystems.com • **www.seprosystems.com**

sepro mineral systems

Tag: 3270-FA-0046
Model: Q4CA-1

Quickdraft

DRAFT INDUCERS

For creating an instant, reliable draft with boilers, furnaces, heaters, ovens, incinerators, kilns and other combustion equipment.

INDUSTRIAL EXHAUSTERS

For venting corrosive, adhesive, moisture and stock laden air, explosive fumes and gasses from all types of environments up to 2000˚F.

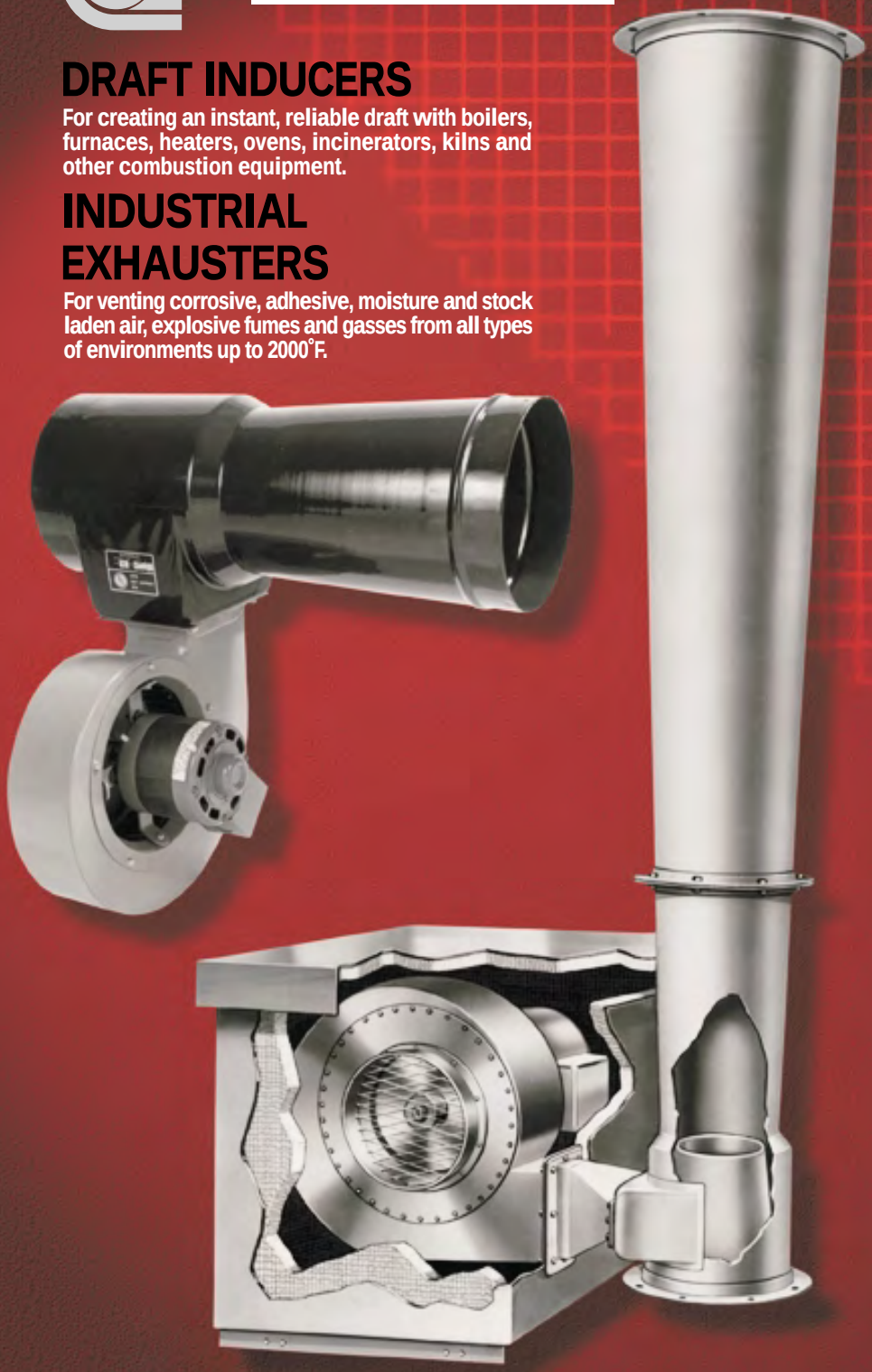

Draft Inducers

Quickdraft units create an instant draft for any type of heating, incineration or combustion equipment. By establishing the most favorable conditions for combustion, the draft inducers increase efficiency, reduce fuel consumption and enhance clean burning.

Motors, blades, bearings...in fact, all moving parts...are external to the air/gas/fume stream. Accordingly, they are all unaffected by smoke, abrasive ash, high temperatures or other adverse factors and conditions.

Problem Solvers

Where a Quickdraft draft inducer has not been installed initially, the units have been added to correct for these typical problems:

- Chimney flues which are too small, too short, or cold at start up.
- Flues which are too large, causing excessive cooling because of recirculation.
- Blow-backs on startup.
- Smoke pipes which are too long, or have too many elbows.
- Surrounding high hills, trees, or buildings which cause turbulence.
- Excessive smoke leakage around clean-out and inspection doors.
- Excessive soot buildup in passes and breeching.
- The necessity to increase chimney or stack capacity when larger equipment is installed.

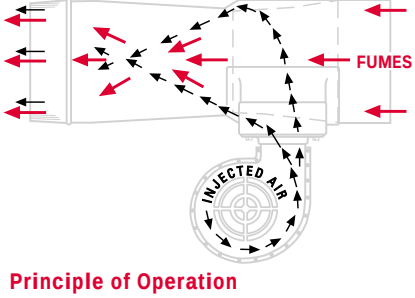

Principle of Operation

As depicted in the illustration, air is injected at high velocity through a plenum chamber controlled by a nozzle into an eductor tube. This action induces the flow of air/gas/fumes/vapors upstream from the tube. Flue gasses, for example, are then entrained with the injected air and exhausted into the chimney or stack. NOTE: There are no obstructions to flow in the Quickdraft eductor tube and all moving parts are external to the flow path.

Standard
Models Q4 through Q10 including Q4S and Q8S use fractional horsepower motors with sleeve bearings, 115V, 1-phase, 60Hz.

Commercial
1/4 to 10 horsepower motors operating at 1725 rpm. Face mounted up to 7 1/2 HP. Power requirements adapted to the application.

Industrial
1/2 to 40 horsepower motors operating at 3450 rpm. Face mounted up to 7 1/2 HP. Motor base mounts over 7 1/2 HP. Power requirements adapted to the application.

Draft Inducer

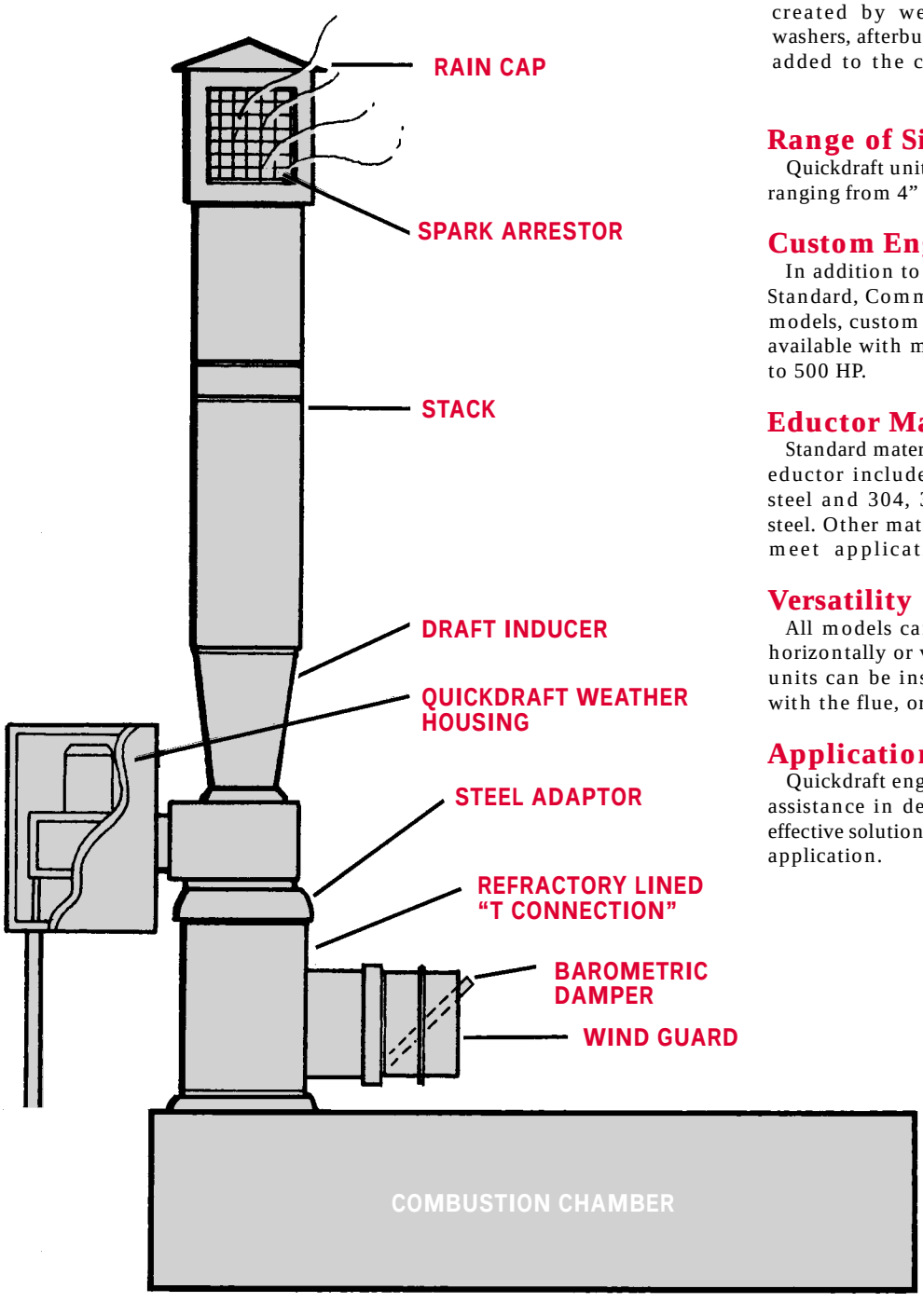

Quickdraft units provide the means for promoting complete burning in virtually any combustion application. The capability of the draft inducer is engineered to overcome the resistance created by wet scrubbers, spray washers, afterburners or other devices added to the combustion process.

Range of Sizes

Quickdraft units are available in sizes ranging from 4" to 42" inlet diameter.

Custom Engineered Units

In addition to the Quickdraft Standard, Commercial and Industrial models, custom engineered units are available with motors from 1/30 HP to 500 HP.

Eductor Materials

Standard materials for the Quickdraft eductor include vitreous enameled steel and 304, 309 or 316 stainless steel. Other materials are available to meet application requirements.

Versatility

All models can be installed either horizontally or vertically. Quickdraft units can be installed either in-line with the flue, or on top of the stack.

Application Engineering

Quickdraft engineers provide expert assistance in determining the most effective solution to any draft inducing application.

Exhausters

Quickdraft Exhausters are used extensively to vent corrosive, adhesive or explosive fumes and gasses in all type of environments. The units are frequently employed in applications where temperatures may reach 2000 degrees F. To assure optimum performance and minimum cost, Quickdraft application engineers are available to select the equipment best suited to any specific project.

This cutaway illustration depicts a motor and blower assembly inside a weather-resistant housing. The assembly is connected to a Quickdraft eductor unit. The cutaway view of the eductor shows the nozzle around which air is injected. Note, the solid construction and simplicity of installation.

Installation

Quickdraft Exhausters are typically mounted on a roof and discharge to the atmosphere. A wide variety of weather-resistant housings are available to shelter the motor and blower unit.

Clear-through Flow Path

The Quickdraft Exhauster provides a clear-through flow path for dust/smoke/gasses/fumes which are to be exhausted. There are no moving parts in the exhaust stream. This allows for the safe handling of explosive and/or hazardous elements carried by the air stream. It assures long life for the equipment and it simplifies service since all moving parts are separated from the eductor unit.

Materials

In many applications, the eductor is constructed of mild steel and may be coated with a variety of corrosion resistant materials. Frequently the units are furnished in varities of stainless steel such as 304, 309 and 316. Other materials are available to meet application requirements.

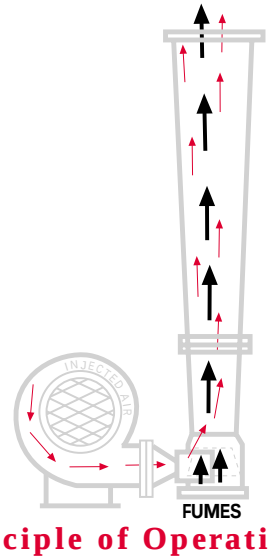

Principle of Operation

Air is injected at high velocity through a plenum chamber controlled by a nozzle into an eductor tube where it entrains the gasses/fumes/vapors which are then exhausted, usually to atmosphere.

Typical Exhauster Applications

Perchloric Acid Hood Exhaust

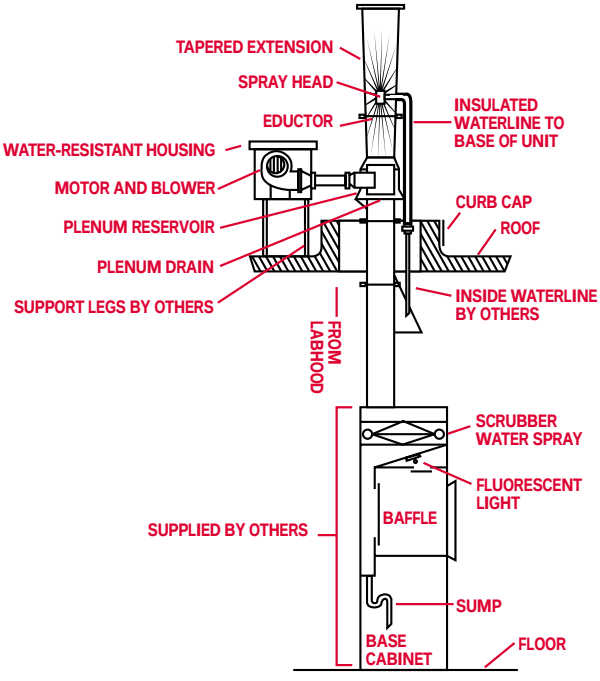

Paper Mill Exhaust Systems

- Pulper exhaust system
- Black-liquor-mixing tank exhaust system
- Starch kettle exhaust system
- Save all exhaust system

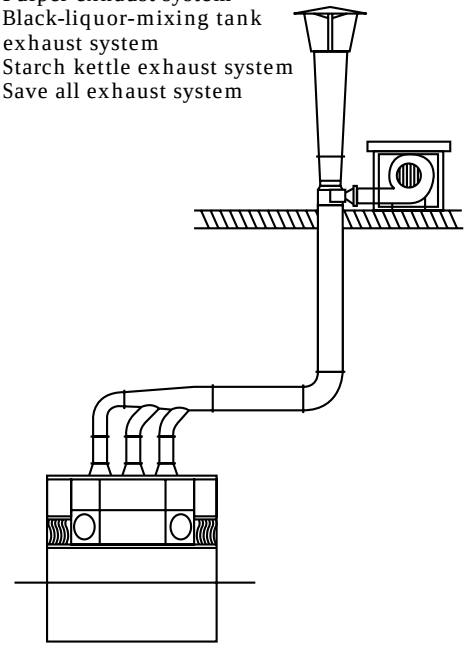

Food Processing Exhaust Systems

Vent grease laden products of combustion from two microwave bacon hoods.

- Pull grease laden air through a filter which traps the solid particles
- A spray nozzle assembly washes the filter
- Exhaust clean filtered air to atmosphere.

Other typical applications:

- Exhaust caustic air from "tree wash cabinet"
- Steam vapor exhaust from cookers

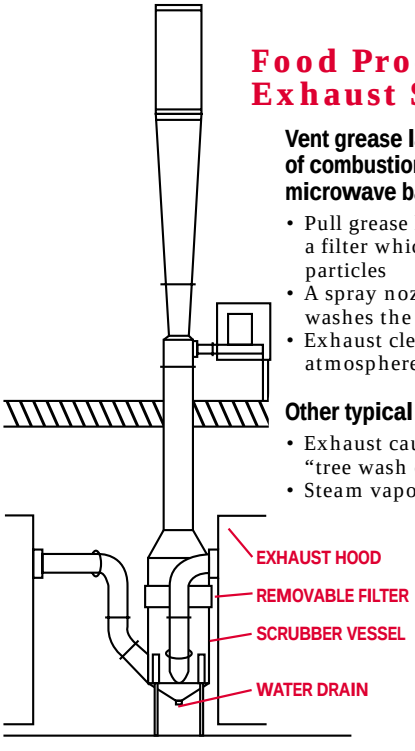

Film Extrusion Exhaust System

- Exhaust air with sticky particulate off vacuum box

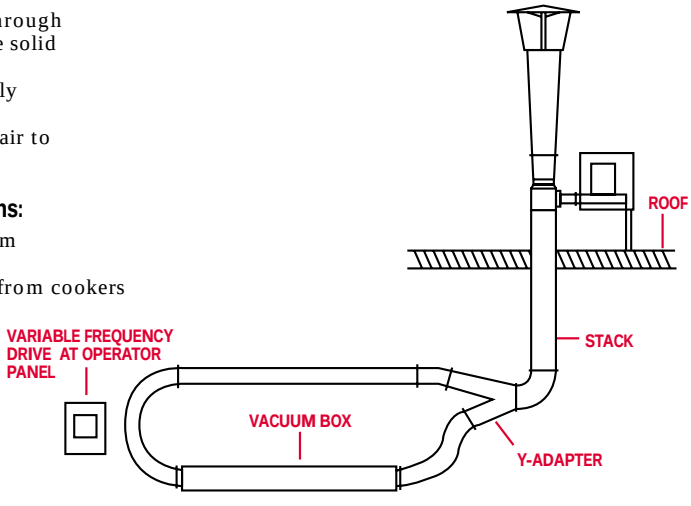

Arrangements & Applications for Draft Inducers

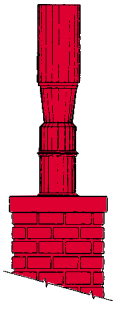

Quickdraft system installed vertically on top of a chimney, discharging to atmosphere.

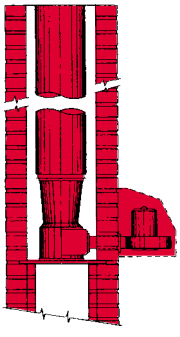

Quickdraft equipment installed in a chimney as part of the flue to preserve architectural design. Motor and blower may be seperately located and protected from the weather.

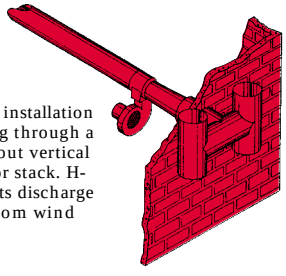

Horizontal installation discharging through a wall, without vertical chimney or stack. H-cap protects discharge opening from wind effect.

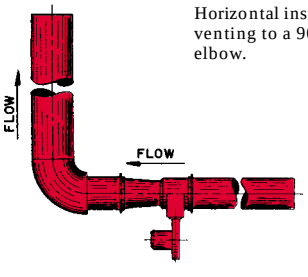

Horizontal installation venting to a 90-degree elbow.

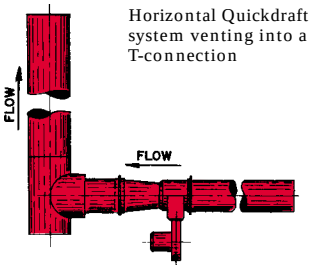

Horizontal Quickdraft system venting into a T-connection

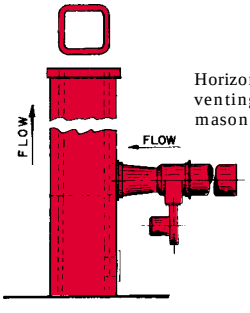

Horizontal Installation venting into a masonry chimney.

Arrangements & Applications for Exhausters

ARRANGEMENT 1

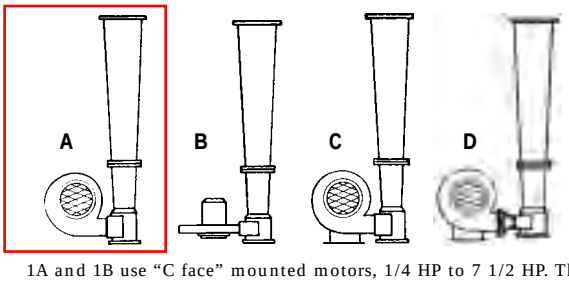

1A and 1B use “C face” mounted motors, 1/4 HP to 7 1/2 HP. The motor shaft is horizontal in 1A and vertical in 1B. 1C and 1D use foot mounted motors, 10HP and above, motor shafts are horizontal. Plenum openings are either horizontal or vertical as shown.

ARRANGEMENT 2

This adds a rainsleeve to the blower inlet and a drip cover to the motor. It is intended for use with horizontal plenum openings on the eductor unit and for 1/4 HP to 7 1/2 HP motors.

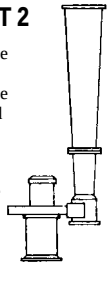

ARRANGEMENT 3

Includes a weather-resistant housing for the motor and blower assembly. It may be used for horizontal or vertical plenum openings on the eductor unit. Motors may be from 1/4 HP to 7 1/2 HP.

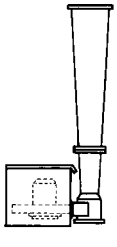

ARRANGEMENT 4

Includes blower inlet protection in the form of a screened hood. Used with vertical plenum opening on the eductor unit for 1/4HP to 7 1/2HP motors, and vertical or horizontal plenum openings for motors 10HP and above A motor base is required for 10HP and above motors.

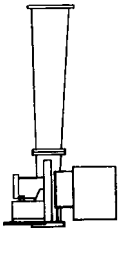

ARRANGEMENT 5

Provides a weather housing specifically designed to accomodate all models and sizes.

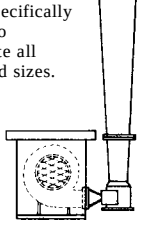

ARRANGEMENT 6

This configuration adds noise abatement to weather protection. May be used indoors or outdoors.

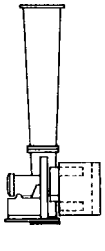

ARRANGEMENT 7

The weather resistant housing here includes filter protection for the inlet air to the blower. It is strongly recommended where ambient air is dust-laden.

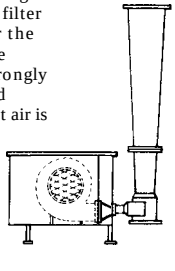

Typical Exhauster Applications

Provide a mechanical, high velocity, induction type (draft inducer)(exhauster) as manufactured by Quickdraft. The complete unit shall be sized and installed in accordance with specific recommendations from the manufacturer to insure the flow of (combustion gasses)(exhaust fumes) is not impeded and that there are no moving parts in the flow path.

The draft system must have a capacity of cfm at inches water column negative static pressure. The exhaust system must be able to continuously operate with a flue gas temperature of up to degrees F, and shall be provided with the following design and components:

The eductor section shall be constructed of (mild steel)(mild steel with two coats of acid resisting vitreous enamel)(304 stainless steel)(309 stainless steel)(316 stainless steel), and be provided (with unflanged ends)(with carbon steel flanges)(with stainless steel flanges).

The blower and motor shall be completely separate from the air stream of induced gasses. Ambient air from the blower is injected into a distributing plenum chamber and discharged through an annular orifice around the periphery of the eductor nozzle. This action shall induce the flow of (combustion gasses)(exhaust fumes) through the (stack)(flue)(exhaust piping).

The motor shall be phase volts hz, (totally enclosed fan cooled)(explosion proof). The blower assembly shall be constructed of standard materials.

Optional accessories and services:
Provide the exhaust system with the following items/services of size and design by Quickdraft:

- Draft Control System with variable frequency drive, with inverter drive motor
- Indoor mounted variable frequency drive controller with (premium efficiency)(inverter drive) motor
- Manual adjustment damper located on blower discharge
- Weather cover for blower assembly
- Rain cap on outlet of stack
- Storm shield on outlet of stack
- Flip top damper on outlet of stack (counter balanced)(pneumatically actuated)(electrically actuated)
- Blower discharge silencer
- Blower intake silencer
- Blower intake filter
- Sound enclosure in place of weather cover
- Shock connector in blower discharge
- Vibration isolators
- General arrangement/installation drawing (a unit specification sheet is provided if the general arrangement drawing is not specified)
- Airflow vs. static pressure curve, with horsepower usage detailed
- Motor and blower shall be remotely located from the Quickdraft eductor, with the injected air ducted to the eductor through feet of straight duct and (90)(45) degree elbows
- Supply air for the blower to be ducted from another location through feet of straight duct and (90)(45) degree elbows

Perchloric Acid Hood Exhaust System

Provide an eductor type exhauster as manufactured by Quickdraft. The complete unit shall be sized and installed in accordance with specific recommendations from the manufacturer to insure that the flow of fumes and gasses is not impeded and that there are no moving parts in the flow path. Provide Quickdraft Model Industrial Exhauster.

The eductor section shall be constructed of 316 stainless steel with 316 stainless steel flanges, provided with a plenum reservoir and drain, with all seams welded air tight and ground smooth to deter material build-up.

The tapered extension shall be constructed of 316 stainless steel with 316 stainless steel flanges, with all seams welded air tight and ground smooth, provided with a 316 stainless steel spray head assembly mounted inside the tapered extension, provided with a *" diameter pipe coupling waterline connection terminating on the outside of the tapered extension.

The blower and motor shall be completely separate from the air stream of the exhaust fumes. Ambient air from the blower shall be injected into a distributing plenum chamber at the eductor and discharged through an annular orifice around the periphery of the eductor nozzle. This action shall entrain the fumes and vent them through the exhaust piping.

The motor shall be phase, volts, hz, (totally enclosed fan cooled)(explosion proof). The blower assembly shall be constructed of standard materials. A weather cover shall be provided over the motor and blower assembly, constructed of standard materials. The blower and weather cover shall be protected with a polyurethane coating.

Optional accessories and services:
Provide the exhaust system with the following items/services of size and design by Quickdraft:

- Manual adjustment damper located on blower discharge
- Indoor mounted variable frequency drive controller with (premium efficiency)(inverter drive) motor
- Blower discharge silencer
- Blower intake filter
- Sound enclosure in place of weather cover
- Shock connector on blower discharge
- Vibration isolators
- General arrangement/installation drawing (a unit specification sheet is provided if the general arrangement drawing is not specified)
- Airflow vs. static pressure curve, with horsepower usage detailed
- Motor and blower shall be remotely located from the Quickdraft eductor, with the injected air ducted to the eductor through feet of straight duct and (90)(45) degree elbows
- Supply air for the blower to be ducted from another location through feet of straight duct and (90)(45) degree elbows

Typical schedule as follows:

Project Item #	Quickdraft Model #	Induced airflow (cfm)	Induced static pressure* (inches water column)	Injected air flow (cfm)	Total discharge airflow (cfm)	Minimum exit velocity (fpm)

Schedules continued:

Hp	rpm	phase/voltage/Hz

*Required static pressure at eductor inlet flange

System Accessories

Quickdraft provides a full range of accessory products to support its complete line of draft inducing and exhausting systems. Some of the most frequently used devices are depicted here.

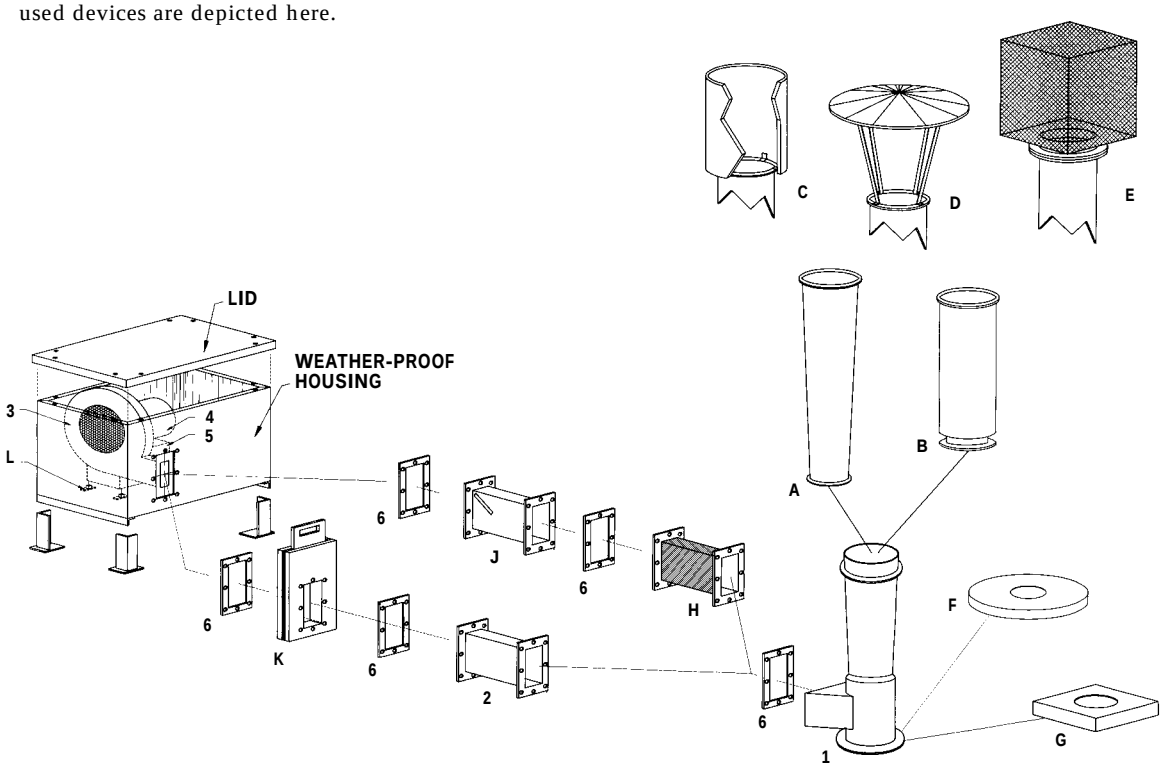

Basic Quickdraft Unit

1. Eductor Tube
2. Coupling, if required
3. Blower Assembly
4. Motor
5. Motor Base- 10 HP and up
6. Gasket

Accessories

A. Tapered Extension- Diameter + 4”
B. Straight Extension- Diameter + 2”
C. Storm Shield- Cylindrical Type
D. Rain Cap- Conical Type
E. Spark Arrestor
F. Curb Cap- Round Type
G. Curb Cap- Square Type
H. Shock Connector
J. Fabricated Volume Damper
K. Machined Blast Gate Damper
L. Vibration Isolators

Underwriters Laboratories

Where appropriate Quickdraft products are listed by UL under the Draft Equipment (MCQX) category. The listing is published in the UL Gas and Oil Equipment Directory.

Quickdraft inducers and exhausters have proved their performance capabilities with many general and specialized testing facilities. The most extensive are the test and conformance requirements at the Quickdraft plant. Test data is available on request for most applications. Testing for special projects is available on request at Quickdraft or, if necessary, at the client’s location.

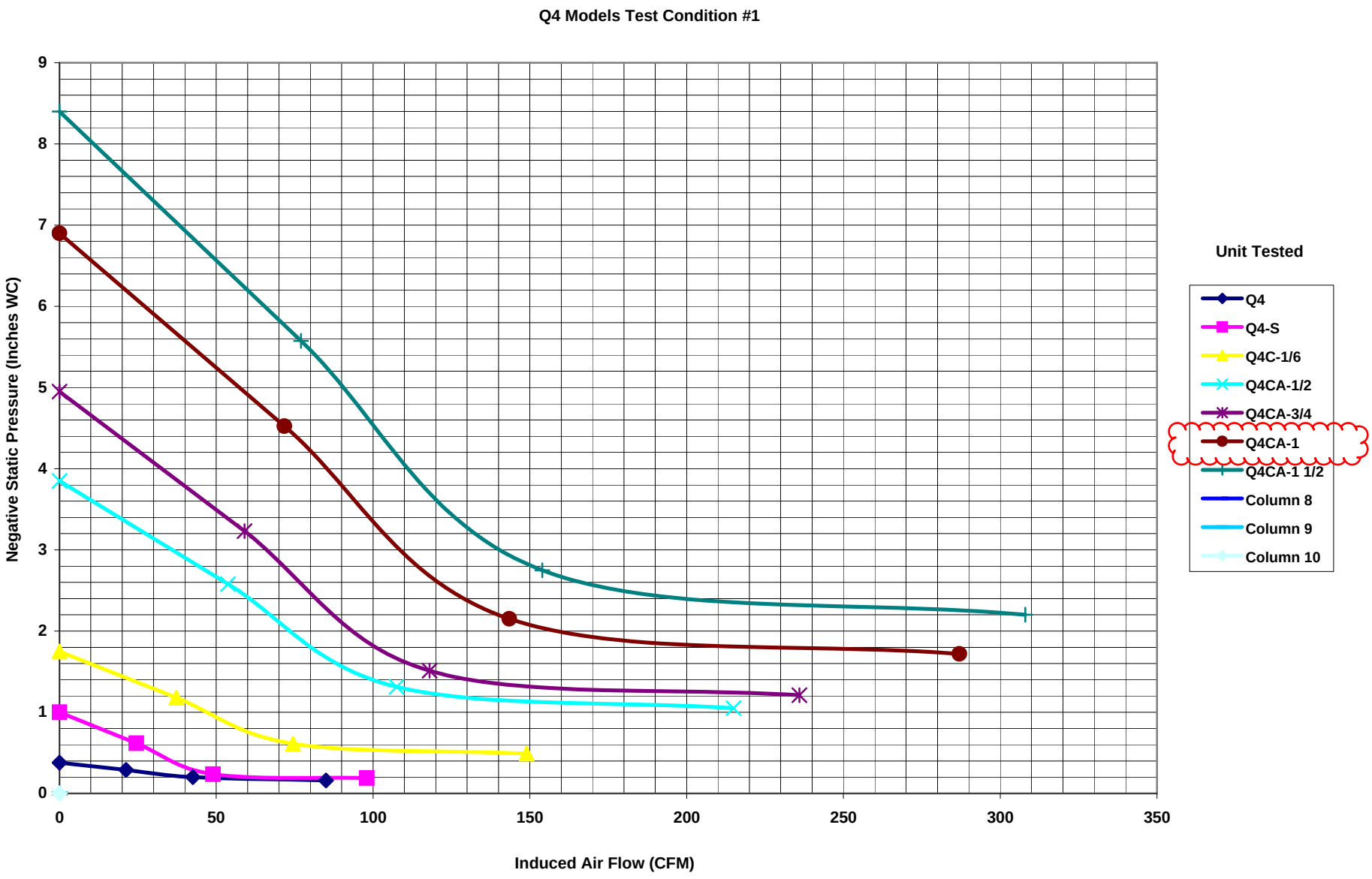
Q4 Models Test Condition #1
Negative Static Pressure (Inches WC)
Induced Air Flow (CFM)
0
1
2
3
4
5
6
7
8
9
0
50
100
150
200
250
300
350
Unit Tested
Q4
Q4-S
Q4C-1/6
Q4CA-1/2
Q4CA-3/4
Q4CA-1
Q4CA-1 1/2
Column 8
Column 9
Column 10

STANDARD FLUE LINERS

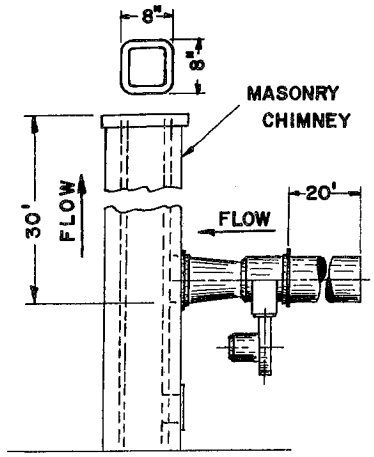

TEST CONDITION 8 (HORIZ.)

VENTING INTO 8"X8" TILE FLUE LINER

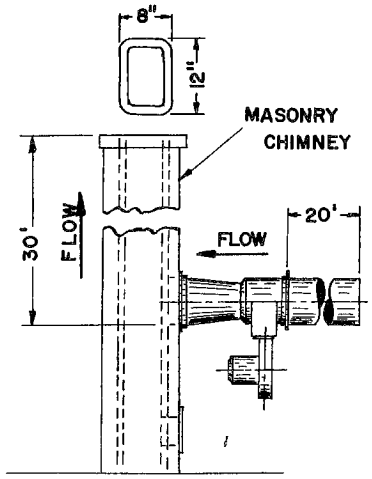

TEST CONDITION 9 (HORIZ.)

VENTING INTO 8"X12" TILE FLUE LINER

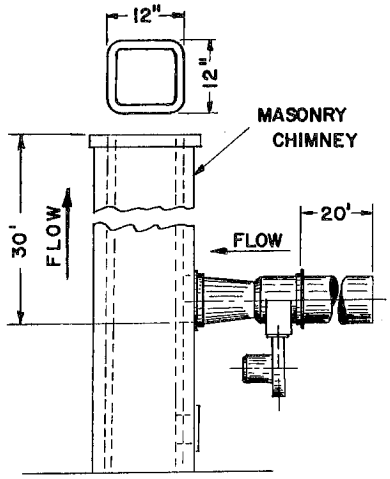

TEST CONDITION 10 (HORIZ.)

VENTING INTO 12"X12" TILE FLUE LINER

PERFORMANCE DATA

NOTE: FROM DRAWINGS ABOVE AND LEFT SELECT TEST CONDITION MOST RESEMBLING PROPOSED INSTALLATION.

Q4CA-1	TEST CONDITIONS									
	1 (VERT.)	2 (VERT.)	3 (VERT.)	4 (HORIZ.)	5 (HORIZ.)	6 (HORIZ.)	7 (HORIZ.)	8 (HORIZ.)	9 (HORIZ.)	10 (HORIZ.)
C.F.M. (STANDARD AIR)	287	249	90	222	113	197	86	239		
C.F.H.	17220	14940	5400	13320	6780	11820	5160	14340		
NEGATIVE STATIC PRESSURE **OPEN**	1.72	1.37	.20	1.10	.28	.85	.155	1.25		
NEGATIVE STATIC PRESSURE **CLOSED**	6.90	6.80	3.20	6.20	3.50	5.75	2.00	6.15		
DRAFT	2.80	2.15	.29	1.75	.42	1.30	.23	1.90		

CAPACITIES SHOWN ABOVE ARE THE RESULTS OF TESTS CONDUCTED IN OUR FACTORY UNDER TEST CONDITIONS AS ILLUSTRATED BY DRAWINGS.

FLOW CAPACITIES IN CFM ARE CALCULATED FROM AIR FLOW MEASUREMENTS MADE ACROSS THE INTAKE DUCT, AT A POINT ONE AND ONE HALF DIAMETERS UPSTREAM OF THE QUICKDRAFT UNIT, USING A PITOT TUBE AND AN INCLINED MANOMETER. READINGS WERE CORRECTED FOR TEMPERATURE AND PRESSURE AND THEN RECALCULATED TO EQUAL WEIGHTS OF STANDARD CFM AT A DENSITY OF .075 POUNDS PER CUBIC FOOT.

NEGATIVE PRESSURE RATINGS ARE PITOT READINGS OF NEGATIVE STATIC PRESSURE. UNDER THE HEADING "OPEN" ARE LISTED THE NEGATIVE STATIC PRESSURE READINGS MEASURED ONE AND ONE HALF DIAMETERS UPSTREAM OF THE QUICKDRAFT WITH THE 20' LONG INTAKE DUCT UNRESTRICTED. UNDER THE HEADING "CLOSED" THE READINGS ARE MEASURED AT THE SAME POINT WITH THE INTAKE DUCT BLOCKED REDUCING THE FLOW TO ZERO.

"DRAFT" READINGS WERE MEASURED BY INSERTING A STRAIGHT METAL TUBE, CONNECTED TO AN INCLINED MANOMETER, INTO THE CENTER OF THE INTAKE DUCT THROUGH THE SAME OPENING USED FOR THE PITOT TUBE. SUCH READINGS HAVE NO RELATIONSHIP TO VOLUME OR STATIC PRESSURE, OTHER THAN UNDER "CLOSED" OR ZERO FLOW CONDITIONS, AND ARE INTENDED ONLY AS A GUIDE TO PERFORMANCE WHEN MORE COMPLETE TESTING IS INCONVENIENT.

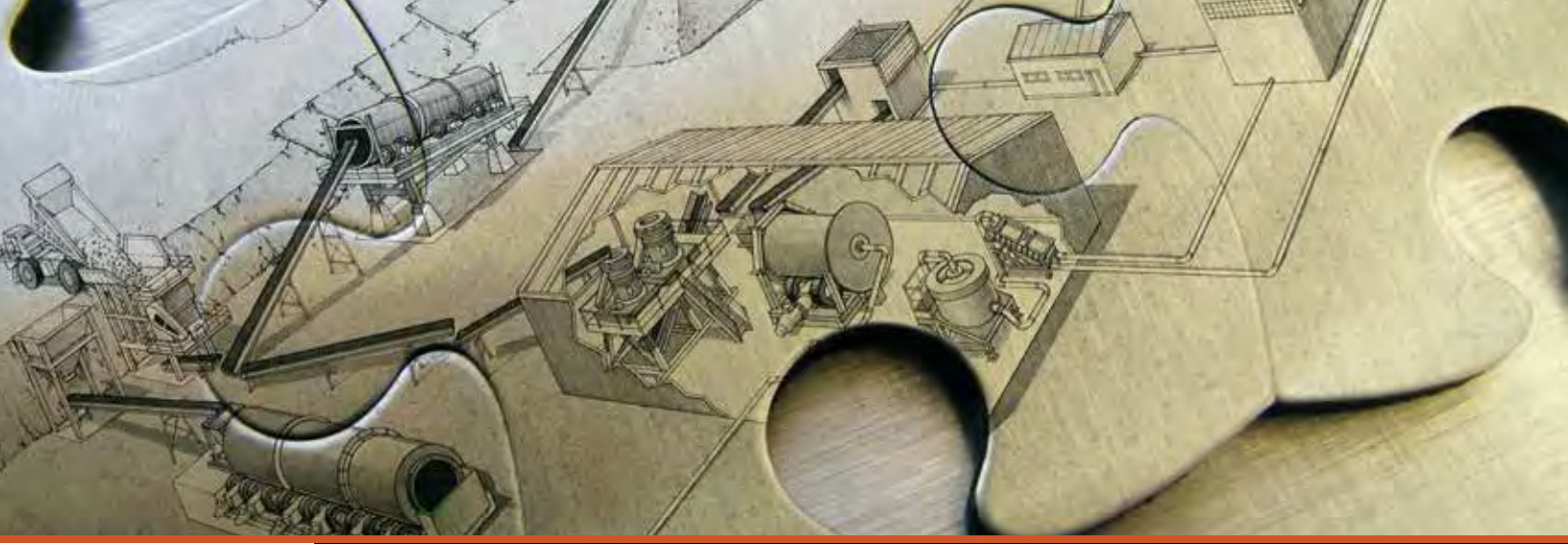

SEPRO FROTH/TANK PUMPS

Tag: 3270-PU-0093
Model: VT40

PUMP FEATURES

Bearing Assembly

- Short overhang on shaft design help minimize shaft deflection as well as vibration
- Heavy duty design which can also accommodate interchangeability
- The cantilever design for the drive assembly enables the pump to operate without submerged seals or bearings

Casing

- Designed for ease of maintenance and interchangeability between lining options
- Feature a solid casing with improved clamp design, allowing ease of rotation and maintenance
- Manufactured with heavy duty materials of construction for the pump to operate under the most arduous conditions

Impeller

- Expulsion vanes on impeller shroud, minimizing recirculation and reduced pressure in the stuffing box

Operation

- The conical tank design allows for improved flow efficiency
- Pumps can easily be installed as stand-alone units or as plant integration
- Open top design prevents air blocking

Sepro Vertical Froth/Tank Pumps feature a streamlined cantilever design with no submerged bearings or shaft seals required. Both pump models offer a protected bearing assembly to prevent slurry access. The open top reservoir eliminates the risk of air locking and ensures smooth operation and simple maintenance. Sepro VF/VT Pumps are available with various wet-end options for best performance, including the newly developed **SH46®** material.

The Sepro Vertical Froth Pump series is strategically designed to minimize the froth factor as much as possible. This model is streamlined with features to meet on site demands, such as a settling area in the tank, an increased vortex size, and the addition of a spiral section which prevents liquid "climbing" the tank wall among other key benefits. Sepro VF Pumps are the ideal solution for a variety of tough froth and flotation applications.

Equipped to handle numerous duties within the mineral processing, pulp and paper and waste water industries, the Sepro Vertical Tank Pump is a flexible solution for abrasive slurry handling. The Sepro VT Pump is customizable to suit process specifications with semi-open impellers, available tank covers, and various materials of construction for lining and advanced wear protection.

SEPRO FROTH/TANK PUMPS

VERTICAL TANK / VERTICAL FROTH SERIES	
VT40	VF100
VT50	VT150
VF50	VF150
VT80	VT200
VF80	VF200
VT100	

Vertical Froth Series (VF)

Vertical Tank Series (VT)

Wet end available in metal-lined only.

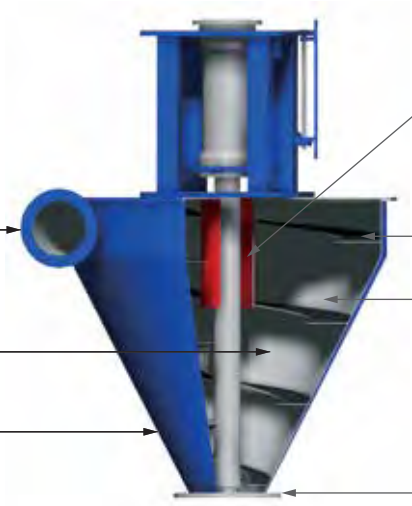

Sepro Mineral Systems Corp.
9850 201 Street, Langley, British Columbia, Canada V1M 4A3
Office: +[1] 604.888.5568 • *Fax:* +[1] 604.888.5521
Toll free: +[1] 800.990.5568 North America
sepro@seprosystems.com • www.seprosystems.com
www.sepropumps.com

Sepro Mineral Systems Ltd.
F128/6B Labone Crescent
P.O. Box 6913 Accra North, Ghana
Tel/Fax: 00 233 302 790300
ghana@seprosystems.com
www.seprosystems.com

sepro mineral systems

01/20/2015

Sidewall Propeller Fans

Belt and Direct Drive

Exhaust, Supply and Reversible

Tag: 3270-FA-0041
Model: SE1-12-432-A4

GREENHECK®
Building Value in Air.

July
2009

Sidewall Propeller Fans

GREENHECK
Building Value in Air.

Greenheck's sidewall propeller fan line is the ideal choice for factory and warehouse applications where high volumes of air and low pressures are required. From general ventilation to industrial duty, the range of construction and performance capabilities offered in this catalog represent the most comprehensive sidewall propeller fan line in the industry.

Performance spans the range between 300 to 87,000 cfm *(510 to 147,814 m^3/hr)* with static pressures to 1.0 in. wg *(249 Pa)*. Fan sizes range from 8 to 54 inches *(203 to 1372 mm)* for direct drive and 20 to 72 inches *(508 to 1829 mm)* for belt drive. Regardless of fan size, performance or duty level, all Greenheck sidewall propeller fans are built to perform with the same high standards of reliability and durability.

All models are available in exhaust or supply arrangements. Propellers are available in fabricated steel, fabricated aluminum or cast aluminum. Drive frames and panels are constructed to match the level of duty and the motor size from the smallest low volume model to the largest industrial duty fan.

There is a wide variety of fans to choose from including:

- Three airflow directions; exhaust, supply and reversible
- Both belt drive and direct drive fans
- Three levels of construction from commercial to industrial
- Multiple blade designs for low sound and optimum efficiency

amca CERTIFIED RATINGS SOUND and AIR PERFORMANCE AIR MOVEMENT AND CONTROL ASSOCIATION INTERNATIONAL, INC.®

Greenheck Fan Corporation certifies that the SB, SBC, S1, S2 and SC3 models shown herein are licensed to bear the AMCA Seal. The ratings shown are based on tests and procedures performed in accordance with AMCA Publication 211 and AMCA Publication 311 and comply with the requirements of the AMCA Certified Ratings Program.

QUICK DELIVERY

Quick Delivery and Quick Build Programs

Greenheck's Quick Delivery Program provides many options to help you meet your project's schedule. Stocking warehouses and distribution centers around the world ensure same-day pickup and same-day shipment for orders in by 2 p.m. (CST). Hundreds of custom products can be manufactured through Quick Build in just days.

For available options and accessories please refer to the Greenheck Stock & Quick Build Catalog.

Leading Edge Technical Support

When product and IOM (Installation, Operation and Maintenance Manual) information is needed, our products are supported by the industry's best product literature, electronic media and Computer Aided Product Selection (CAPS) program. You'll also find this information on our Web site at www.greenheck.com

Our national and international representative organization provide personal service and expertise. To locate your nearest Greenheck representative, call 715-359-6171 or visit our Web site at www.greenheck.com.

c UL us LISTED

Sidewall Direct Drive, Sidewall Belt Drive, Sidewall Belt Driven Cast and Sidewall Cast models are listed for electrical (UL/cUL 705) File no. E40001

*UL is optional and must be specified

Table of Contents

Model Comparison 3
Basics of Fan Selection 4
Mounting Options 5-10
Options and Accessories for Mounting Options . 11
Dimensions for Sidewall Propeller 12-13
Dampers 14-15
Accessories and Options 16
Model Number Code 17
Direct Drive Construction & Material Data 18
Belt Drive Construction & Material Data 19
Direct Drive Dimensional Data 20
Belt Drive Dimensional Data 21
Direct Drive Level 1 22
Direct Drive Level 2 23
Direct Drive Level 3 24
Direct Drive Level 3 Reversible 25
Belt Drive 26-38
Belt Drive Specifications 39
Direct Drive Specifications 40

Model Comparison

GREENHECK
Building Value in Air.

Direct Drive Fan Selection

Three propeller and drive frame combination levels are available with either a L or H type propeller. Models SE1 and SS1 are designed for smaller size applications where lower volumes and static pressures are found. Models SE2, SS2, SCE3 and SCS3 are designed and constructed for applications with higher volumes and static pressures.

Construction Levels		Models			Size Range wheel diameter	Performance
		Exhaust	Supply	Reversible		
Level 1	Fabricated aluminum propeller riveted to the hub	SE1	SS1	NA	8 to 24 in. *(203 to 610)*	Up to 6,700 cfm *(11,383)* and up to .625 in. wg *(156)*
Level 2	Fully welded and gusseted steel blade and hub design	SE2	SS2	NA	16 to 54 in. *(406 to 1372)*	Up to 45,000 cfm *(76,455)* and up to 1 in. wg *(249)*
Level 3	Cast aluminum airfoil blades	SCE3	SCS3	SCR3	24 to 54 in. *(610 to 1372)*	Up to 45,000 cfm *(76,455)* and up to 1 in. wg *(249)*

All measurements given in inches (*mm*), cfm (m^3/hr) or in. wg (*Pa*)

Level 1
Sizes 8 to 10

Level 1
Sizes 12 to 24

Level 2

Level 3

Belt Drive Fan Selection Propeller Types

Three propeller drive frame construction levels with either a L or H type propeller. The application requirements for sound and static pressure determine propeller type. Propellers are available in fabricated steel, fabricated aluminum or cast aluminum.

Construction Levels		Models			Size Range wheel diameter	Performance
		Exhaust	Supply	Reversible		
Level 1	Galvanized steel blades riveted to the hub	SBE-1	SBS-1	NA	20 to 54 in. *(508 to 1372)*	Up to 30,000 cfm *(50,970)* and up to .625 in. wg *(156)*
Level 2	Dual thickness galvanized steel blades riveted to the hub	SBE-2	SBS-2	NA	20 to 60 in. *(508 to 1524)*	Up to 53,000 cfm *(90,048)* and up to .75 in. wg *(19)*
Level 3	Fabricated, fully welded/gusseted steel blade and hub design	SBE-3	SBS-3	NA	24 to 72 in. *(610 to 1829)*	Up to 87,000 cfm *(149,513)* and up to 1 in. wg *(249)*
	Cast aluminum airfoil blades and hub design	SBCE	SBCR	SBCR	24 to 72 in. *(610 to 1829)*	Up to 87,000 cfm *(149,513)* and up to 1 in. wg *(249)*

All measurements given in inches (*mm*), cfm (m^3/hr) or in. wg (*Pa*)

Level 1

Level 2

Level 3
Fabricated

Level 3
Cast Aluminum

Belt Drive Blade Designs

H Type Propeller:

- Straight, moderately pitched blade.
- Designed for applications where static pressures are above 0.5 in. wg *(13 Pa)*.
- These propellers typically run at higher RPMs and generate slightly higher sound levels than the "L" propellers.

L Type Propeller:

- Swept, steeply pitched blade design.
- Propellers typically run at lower RPMs and generate low sound levels.
- The best selection for sound critical applications or applications that require the best combination of both air and sound performance.
- Typically used when the static pressure is 0.5 in. wg *(13 Pa)* or less.

Basics of Fan Selection

The first consideration in any fan selection is the amount of air to be moved and the resistance to this air movement. With specific performance and application criteria in mind, propeller fan selections typically require decisions based on the following criteria.

Belt Drive vs. Direct Drive

Belt drive fans offer the ability to adjust fan speed for system balancing if necessary. They also offer more flexibility in speeds and motor selections. In a cost comparison, belt drive fans are typically less costly than comparable size direct drive fans with low speed motors.

Direct drive fans are often preferred for jobs where maintenance access is difficult. Maintenance costs are generally lower with direct drive fans, since there are no belts or bearings to replace and no pulleys to adjust.

Larger Fans vs. Smaller Fans

In most applications, several fans may meet the specified airflow and pressure requirements. Just as larger fans tend to turn slower and generate less sound, they also tend to have higher initial costs but lower operating costs. Smaller fans, with their higher speeds, have more stable performance curves, lower initial costs, higher sound levels, and higher operating costs.

Low Sound vs. High Static Pressure

Fans selected for high static pressures run at higher speeds and produce higher tip speeds, resulting in higher sound levels. Conversely, in low pressure applications, fans generally run at lower speed producing lower sound levels and are recommended for sound sensitive applications.

How Accessories Affect Static Pressure

All accessory losses must be accounted for when calculating static pressure load. In most cases dampers, guards and weatherhoods actually add very little to the total system pressure. This means that propeller fans used in conjunction with common accessories can typically be specified with low pressure capabilities below .375 in. wg (*93 Pa*). However, in cases where airflow velocities exceed 1,500 ft/m (*7.6 m/s*) through the damper or where filters are used, static pressure loss may be significant. For more specific information on pressure losses due to accessories, refer to pages 8, 9 and 10.

Motor Service Factor

Motors for sidewall propeller fans are cooled by the airstream. With an uninterrupted flow of cooling air, motors may be operated in their service factor range (up to 20% above the motor's nameplate horsepower) without damage due to overheating. Lesser overloads are recommended for applications using totally enclosed or explosion resistant motors.

Belt drive performance tables in this catalog show two speed selections for each propeller type (L or H) at a given motor hp. The first selection is at 1.0 Bhp service factor. The second speed selection is at 1.2 Bhp service factor. Direct drive performance tables show Bhp levels with service factors ranging up to 1.2 Bhp. When a selection at 1.2 Bhp service factor is not desirable for the application, specify the next higher motor horsepower.

Mounting Options Overview

Mounting Option		Description	Page
Standard Wall Mounting		Fan can be mounted directly to a wall.	6
Standard Horizontal Mounting		Fan can be horizontally mounted to move air up or down.	6
Wall Collar	Optional Accessories	The wall collar is an easy way to mount the sidewall propeller fan and its accessories.	7
Wall Housing	Optional Accessories	The wall housing is the easiest and most flexible way to mount the sidewall propeller fan and all of its accessories.	7
Filtered Supply Wall Housing		The filtered supply wall housing is a flexible and easy way for installations where filtering is required.	10

GREENHECK
Building Value in Air.

Standard Wall Mounting

The split drawing (right) illustrates the typical ways of mounting fans directly to the wall when a wall housing or collar is not used.

For exhaust fans, there is a minimum dimension (M) which must be maintained between the propeller and damper, or guard to achieve optimum performance *(failure to meet this minimum dimension will result in loss of fan performance, increased noise and shortened fan and damper life)*. There is also a minimum required wall opening dimension (W.O.) to allow the venturi to fit into the wall opening.

The chart at far right provides the minimum "M" and wall opening dimensions.

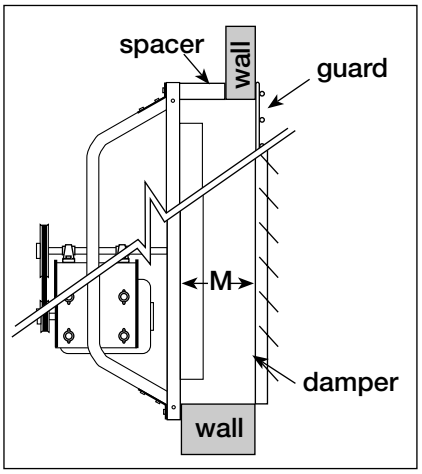

Fan Size	M	Wall Opening
8	6 *(152)*	10½ *(267)*
10	6 *(152)*	12½ *(318)*
12	7 *(178)*	14½ *(368)*
14	8 *(203)*	16½ *(419)*
16	9 *(229)*	18½ *(470)*
18	10 *(254)*	20½ *(521)*
20	12 *(305)*	22½ *(572)*
24	13 *(330)*	26½ *(673)*
30	13 *(330)*	32½ *(826)*
36	14 *(356)*	38½ *(978)*
42	15 *(381)*	44½ *(1130)*
48	16 *(406)*	50½ *(1283)*
54	17 *(432)*	56½ *(1435)*
60	19 *(483)*	62½ *(1588)*
72	19 *(483)*	74½ *(1892)*

All dimensions given in inches ***(mm)***.

This installation may require a spacer (by others) between the fan and wall to achieve the minimum "M" dimension.

Fans can be mounted directly to a wall only if the wall is of sufficient thickness to meet the minimum "M" dimension as shown here.

Standard Horizontal Mounting

Horizontally mounted fans are available for applications requiring vertical airflow.

Modifications Shown in Diagrams	
A	Grooved shaft with snap rings (belt drive fans)
B	Motor pulley retaining hardware (belt drive fans with motor on bottom)
C	Reinforcing angles on fan panel (all fans with motor on bottom)
D	Propeller retaining hardware - not shown (direct drive fans with motor on top)

NOTE: Protective guarding is also required below the fan for safety. When guarding is not ordered with the fan, it must be supplied by the installer. When specifying a fan for horizontal mounting, the motor location (top or bottom) and airflow (upward or downward) are required information.

Typical applications include mounting fans in ductwork or plenums as transfer fans or suspending them from the ceiling in a wall housing for use as recirculation fans. Both belt and direct drive fans can be horizontally mounted. Motors can be mounted on top or on bottom with airflow up or down. Specify configuration best suited for access and service.

Horizontally mounted fans are put under different stresses than fans mounted in a wall. Construction modifications are required depending on motor location (top or bottom) and whether the fan is belt or direct drive.

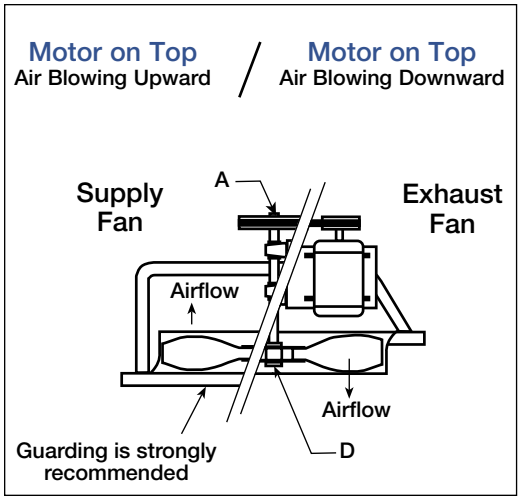

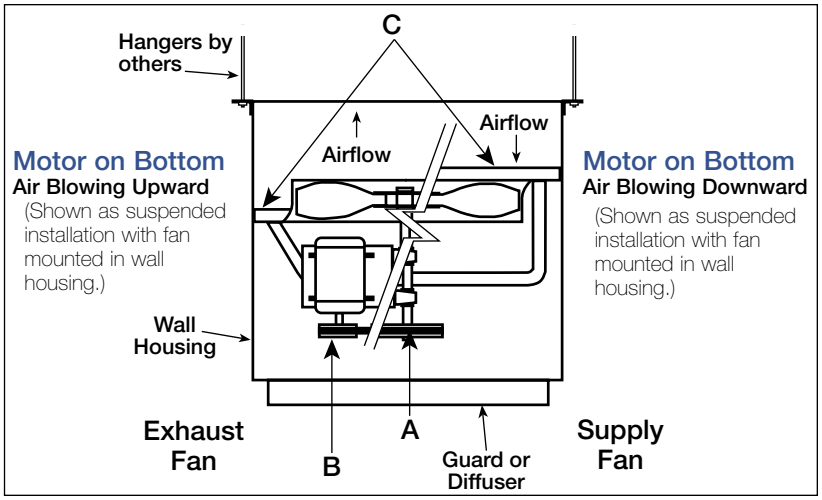

Mounting Options

Wall Collar Mounting

Wall collars offer an alternate method for mounting sidewall propeller fans and the optional accessories shown here. Standard construction is of galvanized steel (painted steel is optional) with heavy gauge mounting flanges and prepunched mounting holes.

Note: Wall collar, fan, damper and guards ship completely factory assembled except when ordered as a kit. Weatherhood ships loose.

Wall Housing Mounting

Wall housings are the safest, most efficient and sturdy platform for mounting sidewall propeller fans and their optional accessories. Wall housings allow for a wide range of mounting arrangements to meet specific applications. It is constructed of galvanized steel (painted steel optional) with heavy gauge mounting flanges and prepunched mounting holes. Protective guards of welded steel wire completely protect the drive side of the wall housing. Guards are coated with Permatector™, a thermal setting polyester urethane. Other paint finishes are also available. Wall housing guards that meet the OSHA requirements are also available.

The wall housing is designed to reduce installation time and provide maximum installation flexibility. Attached accessories such as backdraft dampers, guards and weatherhoods may mount to either end. As a result a wide variety of configurations are available to accommodate the needs of the system designer.

NOTE: Weatherhoods are strongly recommended for all configurations to help prevent moisture infiltration. Mounting flange, damper and guard ship factory mounted on all arrangements as shown except when ordered as a kit.

Note: Wall housing, fan, damper and guards ship completely factory assembled except when ordered as a kit. Weatherhood ships loose.

Mounting Options

Louver Mounting

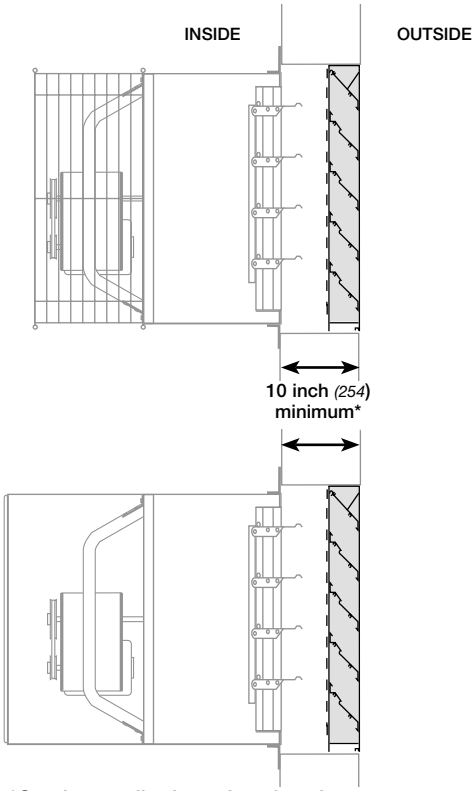

*Can be smaller based on fan size

Where an exterior louvered appearance is desired, a variety of louvers can be used in conjunction with the wall housing or wall collar as shown. However, since louver free area is less than half of the wall opening, pressure drop across the louver must be considered when specifying the fan. The graph below shows louver pressure drop for Greenheck model EDJ-430 based on cfm and fan size.

For additional louver information visit www.greenheck.com or refer to the catalog Louver Products: Severe Duty, Stationary, Operable.

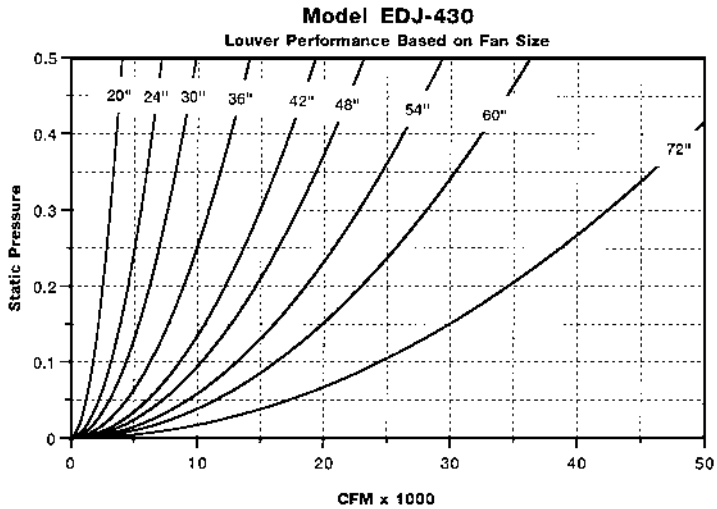

Mounting Arrangements for Interior Service Applications

The arrangements shown below are the most commonly used and should be considered first for most applications. The choice of flush interior or exterior mounting are based on appearance or space considerations.

Belts, pulleys and motors are serviced from inside the building with these arrangements. See reverse mounting arrangements on page 9 for applications requiring service from outside the building.

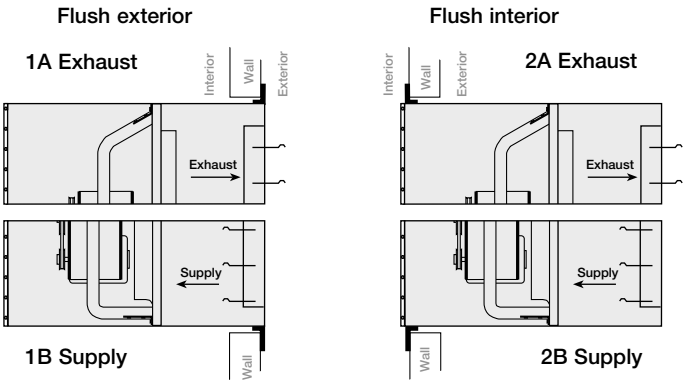

Note: To determine the correct arrangement required when ordering—specify arrangement by the drawing number 1A, 2A, 1B or 2B as shown in the diagrams.

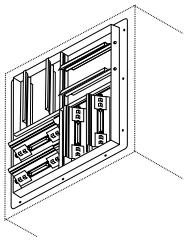

Diffusers Wall Housing Mounted - Manual Operator

Diffusers are constructed with heavy gauge galvanized steel frames, blades and prepunched mounting flanges. They are designed to mount to the interior end of the wall housing when used in the supply configuration. Manual quadrants set the angle of the blades to deflect air in 1, 2 or 4 directions.

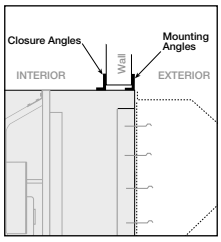

Closure Angles

An extra set of mounting flanges are available for field installation to close off the interior wall opening for a finished appearance.

Arrangements for Exterior Service Applications

Reverse Mount

Reverse mounting a wall housing simply involves installing the wall housing through the wall opening in the opposite direction of the configurations shown. This results in an opposite effect on fan function. An exhaust fan in a wall housing will function as a supply fan when the housing is reverse mounted.

Example: When the exhaust arrangement shown as 1A is reversed (shown as 1A-R) the same unit now becomes a supply arrangement. The construction, fan position and mounting angle location in both configurations remain identical.

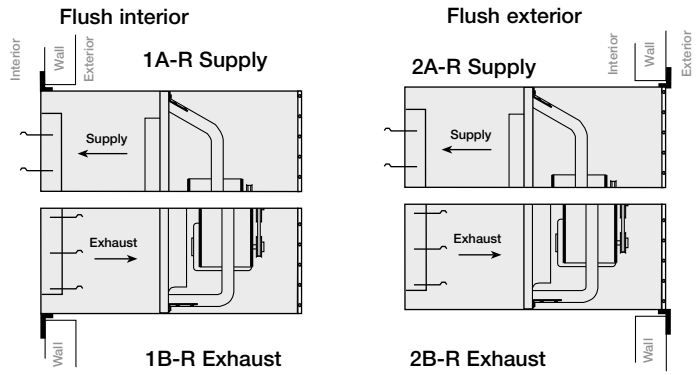

Note: To determine the correct arrangement required when ordering—specify arrangement by the drawing number 1A, 2A, 1B or 2B as shown in the diagrams.

EXHAUST FAN in Wall Housing with Gravity Damper and Weatherhood

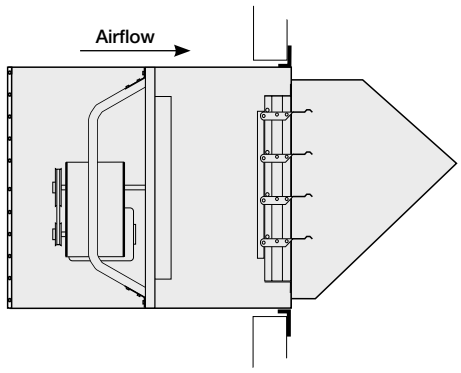

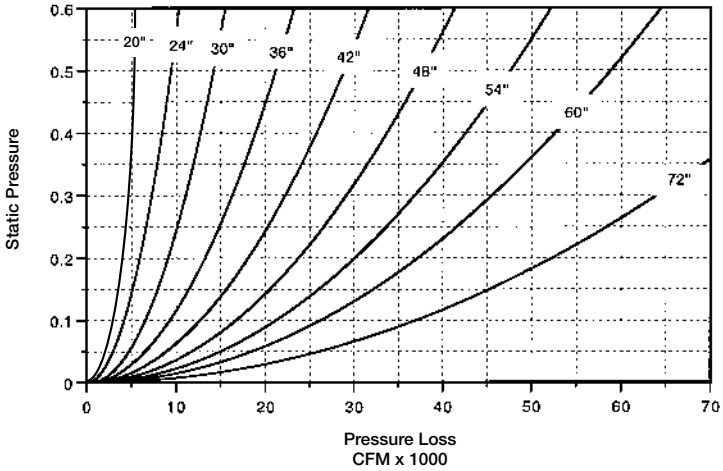

SUPPLY FAN in Wall Housing with Gravity Damper and Weatherhood

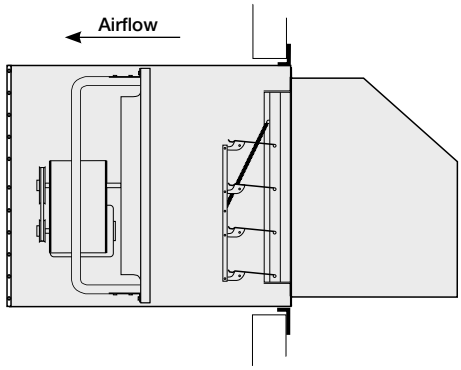

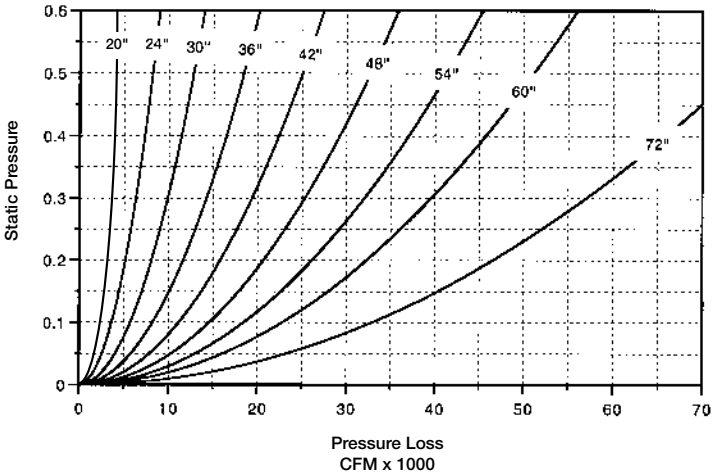

GREENHECK
Building Value in Air.

Filtered Supply Wall Housing Mounting

Filtered supply wall housings are available in seven sizes for fans ranging from size 24 to 54 inches *(610 to 1372 mm)*. They are designed with the draw-thru concept to achieve the highest filter and fan efficiencies.

Standard construction is galvanized steel (painted steel optional). Mounting flanges are factory installed for either flush exterior or flush interior. Permanent 2-inch *(51 mm)* washable filters are accessed through a bolted panel and can be easily removed for cleaning.

All accessory items available with the standard wall housing can be used with the filtered supply wall housing.

Size	Filter Size & Quantity
24	(4) 23¼ *(591)* x 16¼ *(413)*
30	(4) 24⅝ *(625)* x 19¼ *(489)*
36	(6) 23¼ *(591)* x 22⅛ *(562)*
42	(6) 24⅛ *(613)* x 25⅛ *(638)*
48	(12) 23¼ *(591)* x 18¾ *(476)*
54	(12) 23¼ *(591)* x 20¾ *(527)*

Filters are 2 inch ***(51 mm)*** nominal thickness. Above filter sizes are actual dimensions. All dimensions given in inches ***(mm)***.

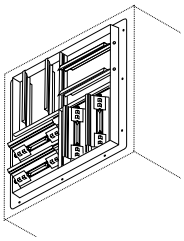

Diffusers - Wall Housing Mounted - Manual Operator

Diffusers are constructed with heavy-gauge galvanized steel frames, blades and prepunched mounting flanges. They are designed to mount to the interior end of the wall housing when used in the supply configuration. Manual quadrants set the angle of the blades to deflect air in 1, 2 or 4 directions.

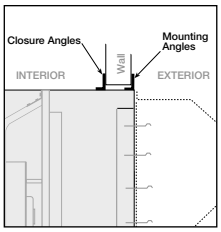

Closure Angles

An extra set of mounting flanges are available for field installation to close off the interior wall opening for a finished appearance.

FILTERED SUPPLY FAN in Wall Housing with Filter Bank, Gravity Damper and Weatherhood

Note: This chart is for manual calculations only. CAPS has filter losses built into the selection tool when the filtered housing option is selected.

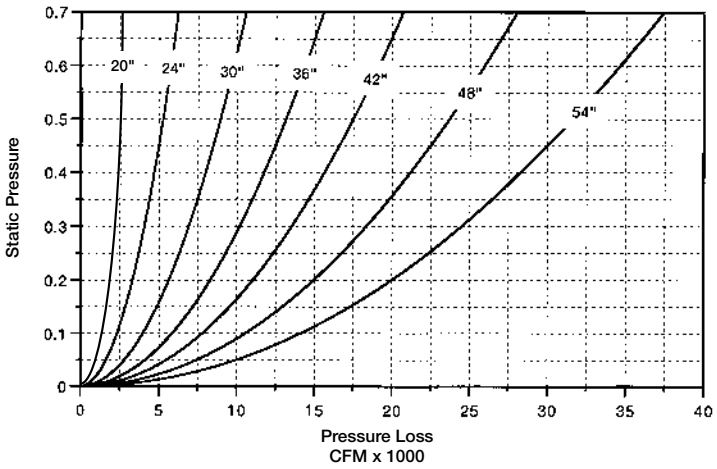

Options & Accessories
for Mounting Options

Option or Accessory		Mounting Option				
		Standard Wall Mounting	Standard Horizontal Mounting	Wall Collar	Wall Housing	Filtered Supply Wall Housing
	Page Number	p. 6	p. 6	p. 7	p. 7	p. 10
Motor Side Guard Protective guards of welded steel wire completely enclose the motor and drive side of the fan. Guards are coated with Permatector, a thermal setting polyester urethane. Other paint finishes are also available. Sizes 20 and larger only.	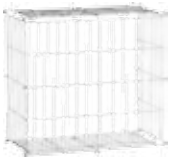	✓		✓		
OSHA Motor Side Guard Protective guards of expanded metal screen in structural steel frames are available to completely enclose the motor and drive side of the fan.		✓		✓		
Weatherhood Weatherhoods shield wall openings and dampers from rain and snow. Weatherhoods are shipped unassembled in kit form for field assembly. Construction is of galvanized steel with wire mesh birdscreen. Mounting flanges have prepunched mounting holes. 45° turn down is for exhaust and 90° turn down is for exhaust and supply. Options include aluminum construction, insect screen and painted finish. The weatherhood cannot be used with the damper guard option.		✓		✓	✓	✓
Damper Guard Damper guards meet the OSHA requirements completely enclose the damper or wall openings on the discharge side of the fan. They are constructed of expanded galvanized steel screen in galvanized steel frames. Mounting flanges have prepunched mounting holes. Options include aluminum construction and painted finish. The damper guard cannot be used with the weatherhood option.		✓		✓	✓	✓
Dampers Used alone or in conjunction with the wall housing or wall collar, a complete line of dampers are available for exhaust or supply configurations.		✓		✓	✓	✓

Dimensions for Sidewall Propeller
Options and Accessories

GREENHECK
Building Value in Air.

Motor Side Guard

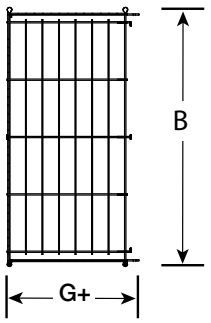

OSHA Side Guard

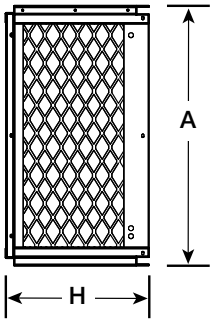

Damper Guard

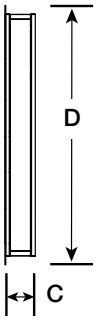

45° Weatherhood

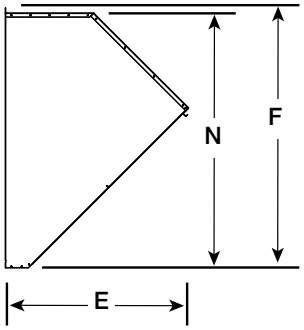

90° Weatherhood

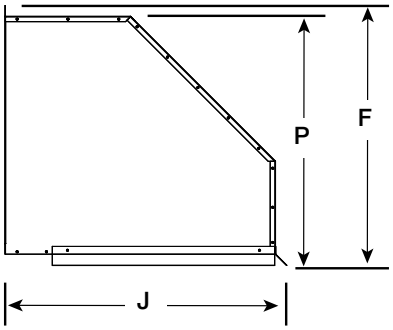

Weatherhood F Dimension		
	45°	90°
8	12 (305)	12¾ (324)
10	14¼ (362)	14⅞ (378)
12	16⅞ (429)	17½ (444)
14	18⅞ (479)	19½ (495)
16	20⅞ (530)	21½ (546)
18	22⅞ (581)	23½ (597)
20	24⅞ (632)	25⅝ (651)
24	31¾ (806)	33⅛ (841)
30	37⅞ (962)	39¼ (997)
36	43⅞ (1114)	45¼ (1149)
42	49⅞ (1267)	51¼ (1302)
48	56 (1422)	57⅜ (1457)
54	62¼ (1581)	63⅝ (1616)
60	68⅜ (1737)	69¾ (1772)
72	80¾ (2051)	82⅛ (2086)

Size	Motor Side Guard		OSHA Side Guard		Damper Guard		Damper	Weatherhood					Material Gauge (ga) Thickness
	B	G+	A	H	C	D		E	J	N	P	Width	
8	–	–	13⅛ (305)	9⅝ (305)	5½ (140)	10¼ (260)	10 (254)	13¼ (337)	16⅜ (305)	11¼ (305)	12 (305)	10½ (267)	20
10	–	–	15¼ (305)	10 (305)	6½ (165)	12¼ (311)	12 (305)	14⅞ (378)	18½ (305)	13⅜ (305)	14 (305)	12½ (318)	20
12	–	–	18 (305)	12 (305)	5⅜ (137)	14¼ (362)	14 (356)	16⅜ (416)	20⅜ (305)	15⅝ (305)	16⅜ (305)	14½ (368)	20
14	–	–	20 (305)	12 (305)	6⅜ (162)	16¼ (413)	16 (406)	17½ (445)	22½ (305)	17⅝ (305)	18⅜ (305)	16½ (419)	20
16	–	–	22 (305)	12 (305)	6¾ (171)	18¼ (464)	18 (457)	19⅜ (492)	25 (305)	19⅝ (305)	20⅜ (305)	18½ (470)	20
18	–	–	24⅛ (305)	12 (305)	6 (152)	20¼ (514)	20 (508)	22 (559)	27½ (305)	21⅝ (305)	22⅜ (305)	20½ (521)	20
20	28 (305)	17⅜ (305)	25⅞ (305)	17¾ (305)	6½ (165)	22¼ (565)	22 (559)	24¾ (629)	29¾ (305)	23⅝ (305)	24⅜ (305)	22½ (572)	18
24	34 (305)	19½ (305)	31⅞ (305)	20 (305)	6⅜ (162)	26¼ (667)	26 (660)	26⅞ (683)	36 (305)	30⅜ (305)	31¾ (305)	29⅛ (740)	18
30	40 (305)	22½ (305)	37⅞ (305)	21¾ (305)	6½ (165)	32¼ (819)	32 (813)	29⅛ (740)	40⅛ (305)	36½ (305)	37⅞ (305)	35⅛ (892)	18
36	46⅛ (305)	23⅞ (305)	43⅞ (305)	24¼ (305)	6¾ (171)	38¼ (972)	38 (965)	33 (838)	45½ (305)	42½ (305)	43⅞ (305)	41⅛ (1045)	18
42	53⅛ (305)	25⅞ (305)	49⅞ (305)	28½ (305)	10 (254)	44¼ (1124)	44 (1118)	35¾ (908)	49¼ (305)	48½ (305)	49⅞ (305)	47⅛ (1197)	18
48	59⅛ (305)	28⅞ (305)	55⅞ (305)	28¼ (305)	9 (229)	50¼ (1276)	50 (1270)	40⅜ (1026)	55½ (305)	54⅝ (305)	56 (305)	53¼ (1353)	18
54	–	–	61⅞ (305)	34¼ (305)	7½ (191)	56¼ (1429)	56 (1422)	44¾ (1137)	61¼ (305)	60⅞ (305)	62¼ (305)	59½ (1511)	16
60	–	–	67⅞ (305)	34¼ (305)	7¼ (184)	62¼ (1581)	62 (1575)	48⅜ (1229)	66½ (305)	67 (305)	68⅜ (305)	65⅝ (1667)	16
72	–	–	81⅞ (305)	34¼ (305)	7½ (191)	74¼ (1886)	74 (1880)	53¼ (1353)	72⅛ (305)	79½ (305)	80⅞ (305)	78⅛ (1984)	12

All dimensions given in inches (mm).

Dimensions for Sidewall Propeller
Options and Accessories

GREENHECK
Building Value in Air.

Wall Collar

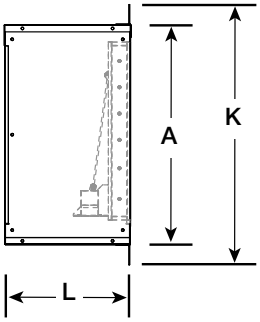

Short Wall Housing

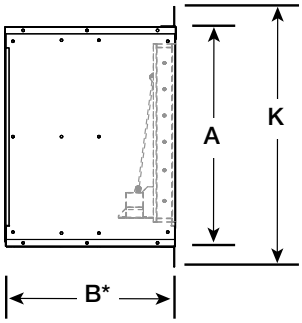

Long Wall Housing

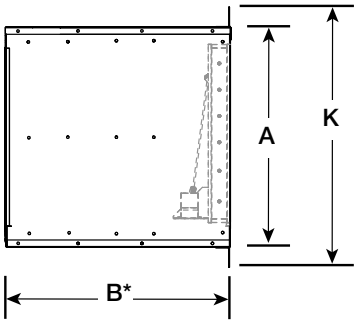

* B - Short Wall Housing: B dimension will increase by 6 inches (152 mm) when a long wall housing is selected or a motorized backdraft damper is specified. For complete dimensional information refer to submittal. All dimensions given in inches (mm).

Filtered Wall Housing

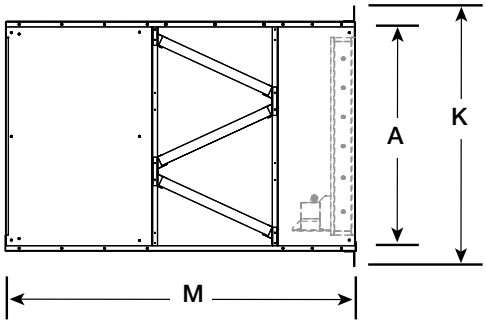

Size	Wall Collar and Housings						Material Gauge (ga) Thickness
	A	B*	K	L	M	W.O.	
8	13¼ (337)	19 (483)	16¼ (413)	16⅛ (410)	–	14¼ (362)	20
10	15¼ (387)	19 (483)	18¼ (464)	16⅛ (410)	–	16¼ (413)	20
12	18¼ (464)	23 (584)	21¼ (540)	16⅛ (410)	–	19¼ (489)	20
14	20¼ (514)	26 (660)	23¼ (591)	18⅜ (467)	–	21¼ (540)	20
16	22¼ (565)	27 (686)	25¼ (641)	18⅜ (467)	–	23¼ (591)	20
18	24¼ (616)	28 (711)	27¼ (692)	18⅜ (467)	–	25¼ (641)	20
20	26¼ (667)	32 (813)	29¼ (743)	18⅜ (467)	–	27¼ (692)	18
24	32¼ (819)	37 (940)	38¼ (972)	18⅜ (467)	63 (1600)	33¾ (857)	18
30	38¼ (972)	38 (965)	44¼ (1124)	18⅜ (467)	65 (1651)	39¾ (1010)	18
36	44¼ (1124)	39 (991)	50¼ (1276)	18¾ (476)	67¼ (1708)	45¾ (1162)	18
42	50⅜ (1280)	44 (1118)	56⅜ (1432)	18¾ (476)	72⅞ (467)	51¾ (1314)	18
48	56⅜ (1432)	44 (1118)	62⅜ (1584)	18⅞ (479)	72⅞ (1851)	57¾ (1467)	18
54	62⅜ (1584)	52 (1321)	68⅜ (1737)	20⅛ (511)	79 11/16 (2024)	63¾ (1619)	16
60	68⅜ (1737)	54 (1372)	74⅜ (1889)	21 (533)	–	69¾ (1172)	16
72	83⅛ (2111)	60 (1524)	89⅛ (2264)	22 (559)	–	84¾ (2153)	12

All dimensions given in inches (mm).

Dampers
Backdraft

Used alone or in conjunction with the wall housing or wall collar, backdraft dampers are available for exhaust or supply configurations. Backdraft dampers are constructed with galvanized frames, aluminum blades and vinyl blade seals. Actuators are available in 24, 120, 208, 230 or 460 volts. Actuators for 50 cycle voltages are also available.

WD-300

Damper Type	Description	Flush Exterior	Flush Interior
Exhaust - Gravity or Motorized[1] 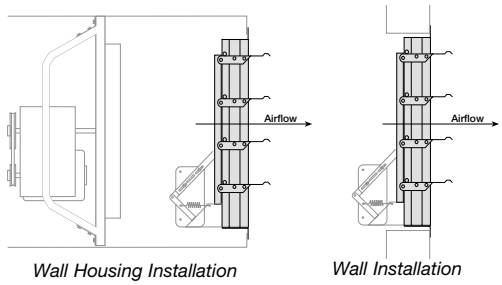 *Wall Housing Installation* *Wall Installation*	WD-320 and WD-300 exhaust dampers are available as either gravity operated or motorized *Model WD-320 shown*	Exhaust backdraft dampers are model WD-320, which has the prepunched mounting flange located on the outlet end of the damper for a flush exterior appearance.	For applications where the mounting flange is required on the inlet end of the damper (so that the damper projects to the exterior), the model WD-300 is available.
Supply – Gravity[2] 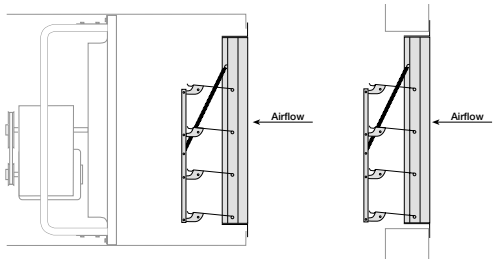 *Wall Housing Installation* *Wall Installation*	• WD-430 and WD-420 intake dampers are only available as gravity operated • Galvanized steel frame and aluminum blades *Model WD-430 shown*	• Model WD-430 has a prepunched mounting flange located on the inlet end of the damper for a flush exterior appearance • Flange on intake	• Model WD-420 is for applications where a prepunched mounting flange is required on the outlet end of damper (so the damper projects to the exterior) • Flange on discharge
Supply - Motorized[3] 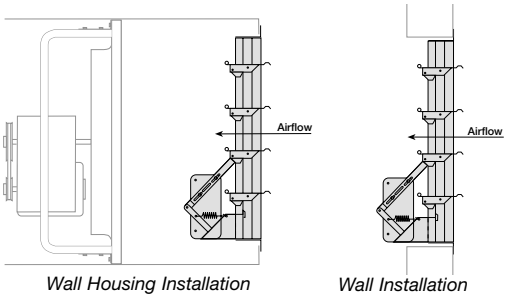 *Wall Housing Installation* *Wall Installation*	• WD-220 and WD-210 intake dampers are only available as motorized • Galvanized steel frame and aluminum blades *Model WD-220 shown*	• Model WD-220 has a prepunched mounting flange located on the inlet end of the damper for a flush exterior appearance • Flange located opposite of motor side of the damper	• Model WD-210 is for applications where a mounting flange is required on the outlet end of the damper (so that the damper projects to the exterior) • Flange located on motor side of the damper

[1] Model WD-320 and WD-300 are used with fans where the motor is 5 hp or less. For fans with motors larger than 5 hp, the model GM-31 medium duty gravity backdraft damper or the model VCD heavy duty motorized backdraft dampers are required.

[2] Model WD-430 and WD-420 are used with fans where the motor is 5 hp or less. For fans with motors larger than 5 hp, the model VCD heavy duty motorized backdraft dampers are required.

[3] Model WD-220 and WD-210 are used with fans where the motor is 3 hp or less. For fans with motors larger than 3 hp, the model VCD heavy duty motorized backdraft damper is required.

Note: Wall housing length increases by 6 inches *(152 mm)* when a heavy duty backdraft damper is specified.

Dampers
Volume Control/Heavy Duty

Volume control dampers are available for exhaust or supply configurations and may be used alone or in conjunction with the wall housing or wall collar. Constructed with heavy galvanized steel frames and blades, model VCD dampers are designed to handle higher air volumes than the standard backdraft damper. Dampers are available in standard leakage (VCD-20), low leakage (VCD-23) and insulated low leakage (VCD-34) configurations. Actuators are available in 24, 120, 208, 230 or 460 volts. Actuators for 50 cycle voltages are also available.

VCD-20

Damper Type	Description	Flush Exterior	Flush Interior
Exhaust or Supply - Motorized 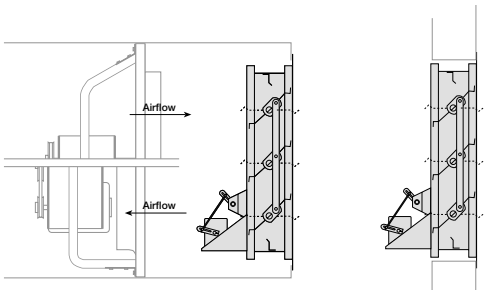 *Wall Housing Installation* *Wall Installation*	**Model VCD-20** - Standard leakage **Model VCD-23** - Low leakage – This damper has blade and jamb seals for minimal leakage when closed. **Model VCD-34** - Insulated low leakage – This damper has blade and jamb seals for minimal leakage when closed. Blades are constructed with 1/2 in. *(13 mm)* polystyrene insulation between two galvanized steel skins.	The VCD damper has the parallel blade set-up and a prepunched mounting flange that provides a flush exterior appearance.	N/A

Propeller Fan Rotation Guide

Propeller blade should cup and throw the air when rotating in the correct rotation as shown below.

Electrical Accessories

Disconnect Switches

Toggle type and heavy duty disconnect switches are available for positive electrical shut-off and safety in servicing fans. The following switches are available to meet individual electrical requirements and can be factory mounted or shipped loose for field mounting. Wiring from the motor to the disconnect box is provided with factory mounted disconnect switches.

- NEMA-1 - General purpose
- NEMA-3R - Rainproof
- NEMA-4 - Watertight
- NEMA-3R & NEMA-4 - Heavy Duty
- NEMA-7 & 9 - for Class 1 and Class 2 hazardous locations.

NEMA-3R and NEMA-1

One-Point Wiring

Available when the following items are selected: Common voltages on the motor and the actuator, disconnect mounted and wired and a wall housing. The wires are pulled from the motor and the actuator on the damper to the disconnect box. (Hard wiring of the components to the disconnect switch is by others.)

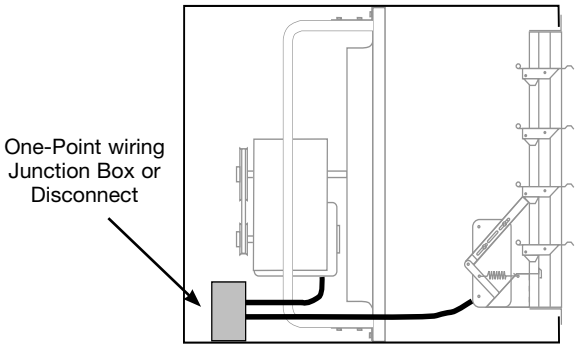

Exception: When a specific voltage is not available on the actuator, Greenheck will provide a hard wired transformer to the actuator. Greenheck will then pull the wires from the transformer to the disconnect box.

UL/cUL 705

All belt and selected direct drive fans with TE standard efficiency, single-speed motors are available with the UL705 listing for electrical.

Extended Wiring Pigtail

Available only in conjunction with factory mounted disconnect switches, liquid tight wiring pigtails allow direct hook-up to the power supply which eliminates field wiring at the fan. Internal or external power supply can be specified.

End Switches

Factory mounted end switches allow the damper to open completely before the fan is energized. This will reduce the back pressure and brake horsepower load on the fan motor at startup. (Field supplied motor starter with a relay is required to complete the wiring on a system using an end switch.)

Finish Options

Coatings

A variety of special coatings ranging from enamels to phenolics are available for decorative or protective purposes. When a special coating is selected for the fan, all accompanying accessory items are also coated unless so specified. Consult your local representative for more details.

Welded and Painted Fan Construction

For applications where extra heavy construction is required, welded steel construction is available. With this option, all stationary connections which are normally bolted are welded and coated with an industrial grade paint. This option applies to belt drive level 3 fans and direct drive level 2 and 3 fans only.

Model Number Code

MODEL: SE1-12-432-A4

Direct Drive Number Code

The model number system is designed to completely identify the fan. The correct code letters must be specified to designate direct drive with exhaust or supply air configuration. The remainder of the model number is determined by the size and performance selected from pages 22 through 25.

S E 2 - 24 - 6 20 - B 7

Model Sidewall Roof Propeller
S - Fabricated Prop
SC - Cast Prop
(Level 3 only)

E - Exhaust
S - Supply
R - Reversible

Level of Construction
1, 2, 3

Fan Size

Number of Blades

Motor HP

4 = ¼	10 = 1	30 = 3
3 = ⅓	15 = 1½	50 = 5
5 = ½	20 = 2	75 = 7½
7 = ¾		

Motor RPM (60Hz)

A = 1750	F = 690
B = 1160	G = 1300
C = 860	J = 1440
D = 1550	L = 1290
E = 1050	P = 1650

Blade Pitch

Belt Drive Number Code

The model number system is designed to completely identify the fan. The correct code letters must be specified to designate belt drive with exhaust or supply air configuration. The remainder of the model number is determined by the size and performance selected from pages 26 through 38.

SB E - 2 L 24 - 7

Model Sidewall Belt Drive
SB - Fabricated Propeller
SBC - Cast Propeller
(Level 3 only)

E - Exhaust
S - Supply
R - Reversible

Level of Construction
1, 2, 3

Motor HP

4 = ¼	15 = 1½	75 = 7½
3 = ⅓	20 = 2	100 = 10
5 = ½	30 = 3	150 = 15
7 = ¾	50 = 5	200 = 20
10 = 1		

Fan Size

Propeller Type
L - Low
H - High

Direct Drive
Construction and Material Data

GREENHECK
Building Value in Air.

All direct drive models are available in either exhaust or supply arrangements. Model SCR3 is the reversible fan model.

	Level 1		Level 2	Level 3	Reversible
Model Sizes	8 - 12: D, G & E motor speeds	12 - 24: A, B & C motor speeds	16 - 54	20 - 54	24 - 54
Panel/Drive Frame	Galvanized steel with one-piece drawn venturi		Galvanized steel with one-piece drawn venturi, bolted structural steel channels and motor plate (paint optional)		
	Zinc plated heavy welded wire guard/support structure (paint optional)	Bolted structural steel channels and motor plate (paint optional)			
Propeller	Aluminum blades riveted to a steel hub		Heavy duty, welded and gusseted painted steel	Heavy duty, cast aluminum	
Motors	Heavy duty, permanently lubricated, sleeve bearing type	Ball bearing type	Heavy duty, permanently lubricated, ball bearing type		

Material Gauges					Max. Motor Frame Size	Approx. Weight (lbs.)	Models	
Fan Size	Fan Panel	Drive Frame	Prop Hub	Prop Blade				
Level 1, Models: S1							**Model S1** Sizes 8 to 12	**Model S1** Sizes 12 to 24
8	18	-	-	-	48	15		
10	18	-	-	-	48	16		
12	18	14*	-	-	48	20		
14	18	14	-	-	56	27		
16	18	14	-	-	56	30		
18	18	14	-	-	56	35		
20	18	14	-	-	145T	39		
24	18	14	-	-	145T	45		
Level 2, Models: S2							**Model S2**	
16	18	14	14	16	56	40		
18	18	14	14	16	56	45		
20	18	12	14	16	145T	60		
24	18	12	14	16	145T	85		
30	16	12	12	16	184T	130		
36	16	12	12	16	215T	230		
42	14	10	11	14	254T	290		
48	14	10	11	14	254T	375		
54	14	10	10	14	256T	465		
Level 3, Models: SC3							**Model SC3**	
20	18	12	Cast Aluminum Prop	Cast Aluminum Prop	145T	55		
24	18	12			184T	80		
30	16	12			184T	125		
36	16	12			215T	220		
42	14	10			254T	290		
48	14	10			254T	386		
54	14	10			256T	477		
Reversible, Model SCR3							**Model SCR3**	
24	16	14	Cast Aluminum Prop	Cast Aluminum Prop	184T	80		
30	16	11			184T	125		
36	16	11			215T	220		
42	14	10			254T	290		
48	14	10			254T	386		
54	14	10			256T	477		

* A, B, and C motor speeds only. Approximate weight does not include accessories.

Belt Drive
Construction and Material Data

	Level 1	Level 2	Level 3 and Reversible	
Model Sizes	20 - 54	20 - 60	24 - 36	42 - 72
Panel/Drive Frame	Galvanized steel with one-piece drawn venturi, bolted structural steel channels and one-piece motor/bearing plate			Galvanized steel with one-piece drawn venturi, bolted structural steel channels and two piece on sizes 42-72
	(paint optional)		(all-welded panel/drive frame optional, paint optional)	
Propeller	Galvanized steel, riveted blades (aluminum optional)	Reinforced galvanized steel, riveted blades, keyed hub (excluding the 2L)	SB - Heavy duty, welded, reinforced, steel blades coated in Permatector™ All with keyed hubs	SBC - Heavy duty, cast aluminum blades. All with keyed hubs
Bearings	Stamped steel pillow blocks up to size 36 and cast pillow blocks for size 42 and larger	Cast iron pillow blocks with grease fittings		

Material Gauges							Shaft Size	Max Motor Frame Size	Approx. Weight (lbs.)	Models	
Fan Size	Fan Panel	Drive Frame	Propeller								
			Hub		Blade						
			L	H	L	H					
Level 1										**Model SB-1H**	
20	18	14	14		16	18	3/4	56	60		
24	18	14	14		16	18	3/4	56	70		
30	18	12	14	12	16		3/4	56	95		
36	18	12	14	12	16		3/4	145T	110		
42	16	12	12	11	14		1	145T	150		
48	16	12	12	11	14		1	145T	175		
54	16	12	12	11	14		1	145T	205		
Level 2										**Model SB-2L**	
20	18	14	14		16	18	3/4	145T	65		
24	18	14	14		16	18	3/4	145T	75		
30	18	12	14	12	16		1	184T	100		
36	18	12	14	12	16		1	184T	115		
42	16	12	12	11	14		1¼	184T	160		
48	16	12	12	11	14		1¼	184T	260		
54	16	12	12	11	14		1¼	184T	315		
60	14	12	3/16 in.		12		1½	215T	370		
Level 3 and Reversible										**Model SB-3L**	**Model SBCR**
24	16	14	12		16		3/4	145T	90		
30	16	12	12		16		1	184T	140		
36	16	12	12		16		1	184T	260		
42	14	12	11		14		1½	215T	320		
48	14	12	11		14		1½	215T	420		
54	14	10	10		14		1½	254T	590		
60	14	10	3/16 in.		12		1¾	256T	755		
72	12	10	3/16 in.		12		2	256T	1050		

Approximate weight does not include accessories.

Direct Drive
Dimensional Data

GREENHECK
Building Value in Air.

Fan Size	A Panel**	B*	C*	D	E	F*	Damper Size**
Level 1							
8	13 (330)	7 (178)	5 (127)	1 (25)	8⅜ (213)	8 (203)	10 (254)
10	15 (381)	8¾ (222)	5 (127)	1 (25)	10⅜ (264)	8 (203)	12 (305)
12	18 (457)	10¾ (273)	8¼ (210)	1 (25)	12⅜ (314)	13⅛ (333)	14 (356)
14	20 (508)	11¼ (286)	8½ (216)	1 (25)	14⅜ (365)	14¼ (362)	16 (406)
16	22 (559)	11¾ (298)	8⅞ (225)	1 (25)	16⅜ (416)	14 (356)	18 (457)
18	24 (610)	14 (356)	10⅞ (276)	1 (25)	18⅜ (467)	14¼ (362)	20 (508)
20	26 (660)	17¼ (438)	11 (279)	1 (25)	20½ (521)	18 (457)	22 (559)
24	32 (813)	20 (508)	12⅝ (321)	1¼ (32)	24⅜ (619)	21 (533)	26 (660)
Level 2							
16	22 (559)	13½ (343)	10¼ (260)	1 (25)	16⅜ (416)	14 (356)	18 (457)
18	24 (610)	13½ (343)	10¼ (260)	1 (25)	18⅜ (467)	14¼ (362)	20 (508)
20	26 (660)	17¼ (438)	13½ (343)	1 (25)	20½ (521)	18 (457)	22 (559)
24	32 (813)	20 (508)	13½ (343)	1¼ (32)	24⅝ (625)	21 (533)	26 (660)
30	38 (965)	20½ (521)	16⅜ (416)	1¼ (32)	30⅝ (778)	21¾ (552)	32 (813)
36	44 (1118)	20½ (521)	16⅜ (416)	2 (51)	36⅝ (930)	28 (711)	38 (965)
42	50 (1270)	26 (660)	18¼ (464)	2 (51)	42⅝ (1083)	28 (711)	44 (1118)
48	56 (1422)	26⅝ (676)	20⅝ (524)	2 (51)	49¼ (1251)	28½ (724)	50 (1270)
54	62 (1575)	28 (711)	22 7/16 (570)	2 (51)	55⅜ (1407)	30⅛ (765)	56 (1422)
Level 3							
20	26 (660)	17¼ (438)	13½ (343)	1 (25)	20½ (521)	18 (457)	22 (559)
24	32 (813)	20 (508)	13½ (343)	1¼ (32)	24⅝ (625)	21 (533)	26 (660)
30	38 (965)	20½ (521)	16⅜ (416)	1¼ (32)	30⅝ (778)	21¾ (552)	32 (813)
36	44 (1118)	20½ (521)	16⅜ (416)	2 (51)	36⅝ (930)	28 (711)	38 (965)
42	50 (1270)	26 (660)	18¼ (464)	2 (51)	42⅝ (1083)	28 (711)	44 (1118)
48	56 (1422)	26⅝ (676)	20⅝ (524)	2 (51)	49¼ (1251)	28½ (724)	50 (1270)
54	62 (1575)	28 (711)	22 7/16 (570)	2 (51)	55⅜ (1407)	30⅛ (765)	56 (1422)
Reversible							
24	32 (813)	20 (508)	13½ (343)	1¼ (32)	24⅝ (625)	-	26 (660)
30	38 (965)	20½ (521)	16⅜ (416)	1¼ (32)	30⅝ (778)	-	32 (813)
36	44 (1118)	20½ (521)	16⅜ (416)	2 (51)	36⅝ (930)	-	38 (965)
42	50 (1270)	26 (660)	18¼ (464)	2 (51)	42⅝ (1083)	-	44 (1118)
48	56 (1422)	26⅝ (676)	20⅝ (524)	2 (51)	49¼ (1251)	-	50 (1270)
54	62 (1575)	28 (711)	22 7/16 (570)	2 (51)	55⅜ (1407)	-	56 (1422)

Level 1: Sizes 8 - 12

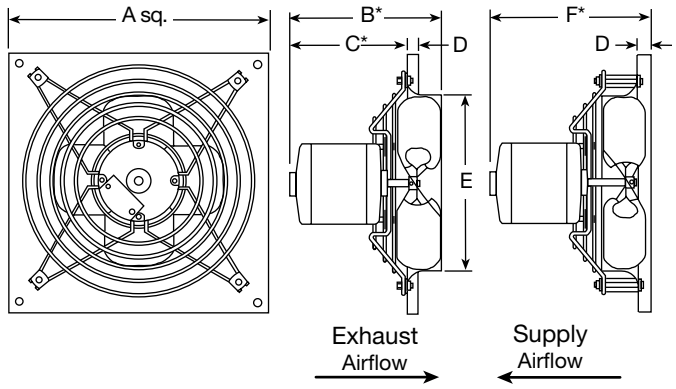

Level 1: Sizes 12 - 24

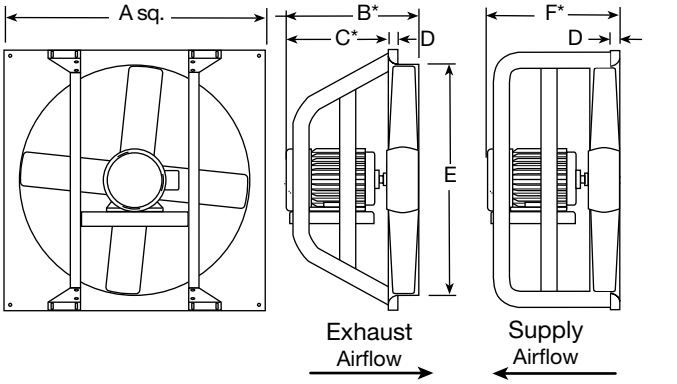

Level 2 & Level 3

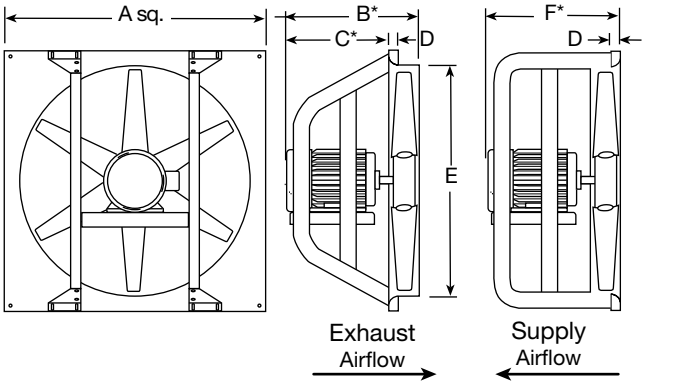

Reversible

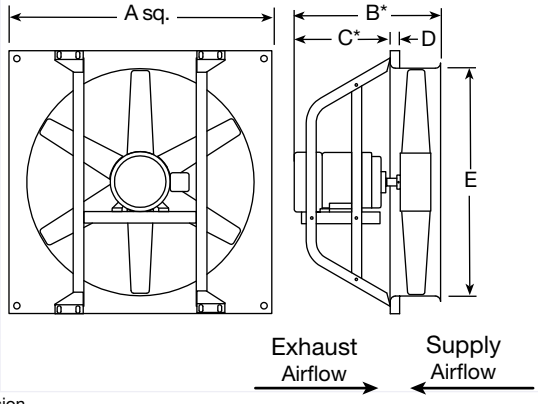

* Varies with motor selection. All dimensions given in inches *(mm)*. **Square dimension.

Belt Drive
Dimensional Data

Fan Size	A Panel**	B	C	D	E	F*	Damper Size**
Level 1							
20	26 (660)	19½ (495)	16¼ (413)	1 (25)	20½ (521)	20 (508)	22 (559)
24	32 (813)	19½ (495)	16⅛ (410)	1¼ (32)	24⅝ (625)	20 (508)	26 (660)
30	38 (965)	22½ (572)	18¼ (464)	1¼ (32)	30⅝ (778)	21 (533)	32 (813)
36	44 (1118)	21½ (546)	16½ (419)	2 (51)	36⅝ (930)	23 (584)	38 (965)
42	50 (1270)	25 (635)	20 (508)	2 (51)	42¾ (1086)	23 (584)	44 (1118)
48	56 (1422)	25 (635)	19 (483)	2 (51)	48¾ (1238)	23 (584)	50 (1270)
54	62 (1575)	25 (635)	19½ (495)	2 (51)	55¼ (1403)	24 (610)	56 (1422)
Level 2							
20	26 (660)	19½ (495)	16¼ (413)	1 (25)	20½ (521)	20 (508)	22 (559)
24	32 (813)	19½ (495)	16⅛ (410)	1¼ (32)	24⅝ (625)	20 (508)	26 (660)
30	38 (965)	21½ (546)	17¼ (438)	1¼ (32)	30⅝ (778)	21 (533)	32 (813)
36	44 (1118)	21½ (546)	16½ (419)	2 (51)	36⅝ (930)	22 (559)	38 (965)
42	50 (1270)	25 (635)	20 (508)	2 (51)	42¾ (1086)	25½ (648)	44 (1118)
48	56 (1422)	25 (635)	19 (483)	2 (51)	48¾ (1238)	25½ (648)	50 (1270)
54	62 (1575)	26 (660)	20½ (546)	2 (51)	55¼ (1403)	24 (610)	56 (1422)
60	68 (1727)	28 (711)	21 7/16 (545)	2 (51)	61¼ (1556)	24 (610)	62 (1575)
Level 3 & Reversible							
24	32 (813)	19 (483)	15⅝ (397)	1¼ (32)	24⅝ (625)	20½ (521)	26 (660)
30	38 (965)	21½ (546)	17¼ (438)	1¼ (32)	30⅝ (778)	20 (508)	32 (813)
36	44 (1118)	28 (711)	23 (584)	2 (51)	36⅝ (930)	27 (686)	38 (965)
42	50 (1270)	28 (711)	23 (584)	2 (51)	42¾ (1086)	29¼ (743)	44 (1118)
48	56 (1422)	31½ (800)	27½ (699)	2 (51)	48¾ (1238)	30½ (775)	50 (1270)
54	62 (1575)	35¾ (908)	30¼ (768)	2 (51)	55¼ (1403)	36¼ (921)	56 (1422)
60	68 (1727)	35 (889)	28 7/16 (722)	2 (51)	61¼ (1556)	35½ (902)	62 (1575)
72	82 (2083)	35 (889)	28¼ (718)	2⅛ (54)	73¼ (1861)	35½ (902)	74 (1880)

All dimensions given in inches *(mm)*. **Square dimension.

Level 1

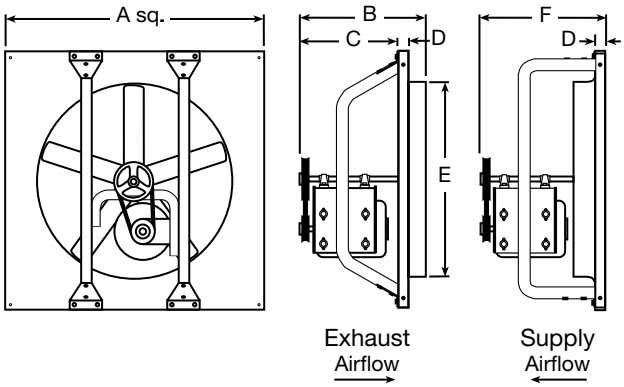

Level 2

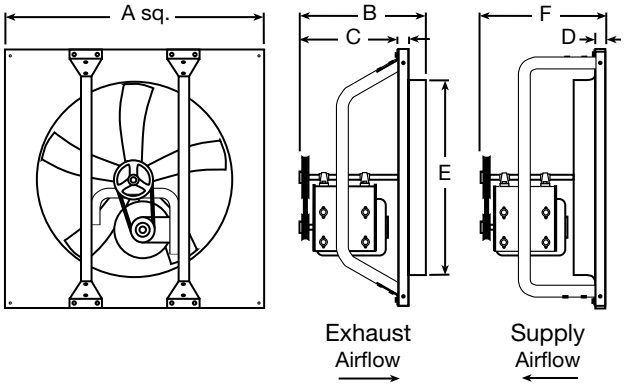

Level 3

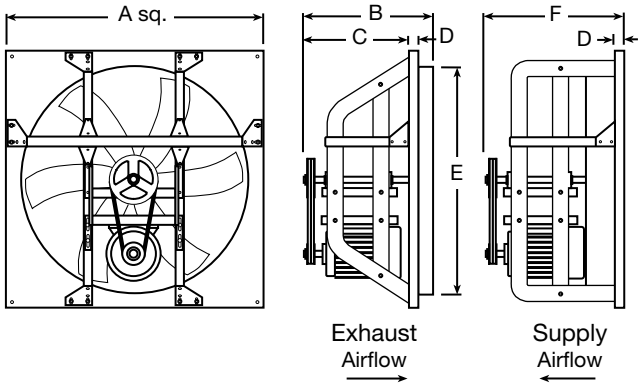

Reversible

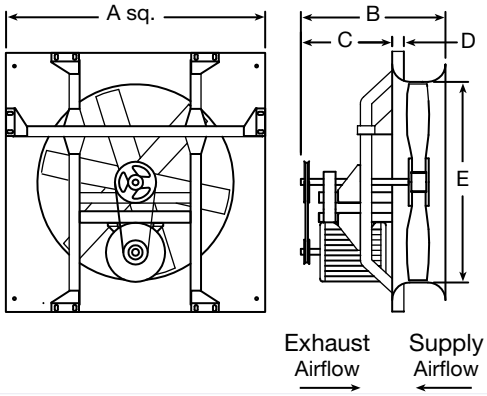

S1-Direct Drive - Level 1

GREENHECK
Building Value in Air.

Model Number	Motor HP	Fan RPM	Max BHP	Sones @ F.A.	CFM/Static Pressure in Inches WG											
					0.00	0.05	0.10	0.125	0.15	0.20	0.25	0.30	0.375	0.50	0.625	0.75
S1 Performance Limits																
S1-8-424-G	1/80	1350	28W	3.2	300	263	190									
S1-8-426-D		1550	39 W	3.7	310	282	231	190	140							
S1-8-428-P	1/40	1650	53 W	3.9	329	302	266	237	214	149						
S1-8-440-E	1/100	1050	50 W	1.5	311	224	126	100								
S1-8-440-G	1/40	1350	55 W	3.5	399	354	256	198	174	138						
S1-8-440-D	1/25	1550	75 W	4.9	459	419	351	307	255	198	167	115				
S1-10-424-D	1/50	1550	45 W	4.6	575	525	462	407								
S1-10-426-P	1/30	1650	55 W	4.8	590	551	502	468	428							
S1-10-428-P	1/20		78 W	5.2	606	573	536	511	484	407	272	249	213			
S1-10-440-E	1/40	1050	105 W	3.2	626	533	361									
S1-10-440-G	1/20	1350	135 W	4.9	804	738	655	615	564							
S1-10-440-D	1/12	1550	170 W	5.9	924	869	800	763	726	641						
S1-12-426-D	1/10	1550	105 W	6.6	1113	1055	975	929	877	748	609	428				
S1-12-436-G		1350	120 W	7.5	1269	1202	1101	1048	973	779	359					
S1-12-432-E	1/20	1050	125 W	4.3	981	877	744	678	622	463	383					
S1-12-432-G	1/12	1350	170 W	6.0	1262	1185	1097	1037	986	886	798	721	540			
S1-12-432-D	1/8	1550	190 W	7.5	1449	1382	1309	1271	1224	1129	1042	952	860	614	478	
S1-12-432-C8		860	0.03	4.0	804	664	511	438	348	248						
S1-12-432-B6	1/6	1160	0.07	4.8	1084	991	872	816	755	660	503	431				
S1-12-432-A4	1/4	1750	0.27	8.7	1636	1577	1515	1481	1447	1365	1282	1207	1085	947	706	585
S1-14-440-C8	1/8	860	0.07	5.9	1189	1055	919	711	649	551	408					
S1-14-440-B6	1/6	1160	0.15	7.3	1604	1493	1406	1350	1297	1207	908	837	720			
S1-14-432-A4	1/4	1750	0.29	12.9	2404	2351	2299	2273	2245	2189	2134	2052	1912	1636		
S1-14-436-A3	1/3		0.39	14.8	2734	2674	2615	2585	2553	2487	2422	2340	2192	1829	1220	
S1-16-436-C8	1/8	860	0.12	5.0	2003	1876	1732	1621	1433	1037	849	705				
S1-16-426-B6	1/6	1160	0.15	7.5	2108	2027	1942	1894	1846	1725	1588					
S1-16-428-B6			0.19	7.6	2235	2148	2058	2012	1964	1840	1710	1534	1126			
S1-16-436-B4	1/4		0.29	9.5	2702	2609	2512	2461	2410	2281	2067	1761	1359	1049		
S1-16-421-A3	1/3	1750	0.38	13.5	2552	2506	2461	2438	2415	2367	2309	2252	2143	1916		
S1-16-428-A5	1/2		0.63	15.3	3372	3315	3257	3228	3199	3140	3078	3016	2908	2700	2468	1861
S1-16-436-A7	3/4		0.89	16.6	4076	4015	3954	3923	3892	3828	3760	3693	3591	3349	2902	2298
S1-18-434-C8	1/8	860	0.15	8.7	2661	2464	2202	2032	1874	1346						
S1-18-436-C6	1/6		0.19	9.2	2778	2595	2319	2102	1963	1385	1108	912				
S1-18-424-B6		1160	0.20	6.7	2800	2690	2568	2501	2427	2257	2025					
S1-18-429-B4	1/4		0.30	7.2	3238	3120	2987	2908	2828	2668	2434	2145	1510	1183		
S1-18-436-B3	1/3		0.45	12.6	3747	3621	3466	3370	3267	3034	2732	2548	1727	1363		
S1-18-424-A5	1/2	1750	0.67	15.7	4224	4151	4079	4043	4006	3925	3835	3745	3592	3252		
S1-18-429-A7	3/4		0.88	17.4	4885	4807	4729	4690	4651	4565	4460	4354	4196	3926	3460	2984
S1-20-428-C6	1/6	860	0.19	10.8	3133	3001	2823	2727	2641	2390	2085	1632				
S1-20-436-C4	1/4		0.29	11.7	3888	3717	3523	3420	3285	2918	2237	2091	1873			
S1-20-424-B4		1160	0.30	13.8	3655	3561	3467	3419	3364	3255	3095					
S1-20-428-B3	1/3		0.45	14.3	4227	4128	4030	3974	3901	3755	3621	3493	3175	2287		
S1-20-436-B5	1/2		0.70	14.4	5245	5118	4991	4926	4849	4697	4525	4321	3863	2920	2650	
S1-20-420-A7	3/4	1750	0.87	24	4682	4617	4552	4519	4486	4421	4362	4303	4215	4036	3810	
S1-20-428-A10	1		1.19	25	6377	6311	6246	6214	6181	6116	6050	5965	5820	5580	5368	5087
S1-20-432-A15	1½		1.73	26	7115	7038	6962	6924	6886	6809	6733	6653	6518	6292	6016	5688
S1-24-432-C4	1/4	860	0.34	9.1	5000	4767	4540	4409	4233	3789						
S1-24-436-C3	1/3		0.41	10.0	5457	5232	5002									
S1-24-437-C5	1/2	1160	0.58	11.6	6136	5953	5764	5631	5497	5150	4720	4341				
S1-24-428-B5			0.61	14.1	5908	5794	5680	5623	5566	5382	5175	4898				
S1-24-432-B7	3/4		0.83	14.7	6745	6572	6399	6313	6229	6064	5830	5569	5007			

Performance certified is for Models S1 for installation type A: free inlet, free outlet. Power rating (Bhp) does not include transmission losses. Performance ratings do not include the effects of appurtenances (accessories). *Speed (RPM) shown is nominal. Performance is based on actual speed of test. The sound ratings shown are loudness values in fan sones at 5 ft (1.5 m) in a hemispherical free field calculated per AMCA Standard 301. Values are for installation type A: free inlet hemispherical sone levels.

S2-Direct Drive - Level 2

GREENHECK
Building Value in Air.

Model Number	Motor HP	Fan RPM	Max BHP	Sones @ F.A.	CFM / Static Pressure in Inches WG											
					0.00	0.10	0.125	0.15	0.20	0.25	0.30	0.375	0.50	0.625	0.75	1.00
SE2 / SS2 Performance Limits																
S2-16-427-B6	1/6	1160	0.15	11.3	2213	1933	1849	1766	1536	1215	894					
S2-16-435-B6			0.20	11.6	2522	2239	2150	2055	1732	1434						
S2-16-417-A4	1/4	1750	0.30	18.7	2582	2414	2375	2336	2255	2156	2053	1869	1435	1084		
S2-16-423-A3	1/3		0.38	19.9	3076	2899	2854	2809	2719	2621	2524	2331	1916			
S2-16-430-A5	1/2		0.56	23	3531	3344	3297	3250	3155	3058	2944	2750	2303	1642		
S2-18-423-B6	1/6	1160	0.20	12.5	2917	2632	2562	2458	2249	2018						
S2-18-430-B4	1/4		0.29	14.2	3376	3038	2944	2861	2662	2398	2084					
S2-18-435-B3	1/3		0.35	16.2	3658	3311	3208	3089	2850	2556	1903					
S2-18-411-A4	1/4	1750	0.30	21	3121	2978	2941	2893	2799	2697	2586	2415				
S2-18-415-A3	1/3		0.41	22	3623	3476	3439	3400	3300	3199	3091	2920				
S2-18-421-A5	1/2		0.59	22	4177	4015	3975	3931	3807	3683	3574	3416	3059	2558		
S2-20-420-B6	1/6	1160	0.21	15.3	3697	3350	3257	3137	2857	2532	2155					
S2-20-423-B4	1/4		0.30	17.2	3997	3626	3522	3419	3153	2834	2430					
S2-20-430-B3			0.40	18.6	4468	4087	3989	3882	3626	3281						
S2-20-407-A4	1/3	1750	0.37	27	3579	3382	3333	3282	3180	3053	2922	2744	2300	1869	1342	
S2-20-410-A3			0.37	28	4035	3835	3785	3731	3623	3461	3254	3113	2791			
S2-20-415-A5	1/2		0.57	29	4934	4697	4637	4578	4454	4330	4185	3957				
S2-20-420-A7	3/4		0.88	30	5577	5355	5300	5243	5121	4999	4877	4614	4138	3544	2992	
S2-20-427-A10	1		1.19	33	6633	6364	6297	6231	6099	5968	5837	5613				
S2-20-435-A15	1½		1.76	35	7266	6980	6909	6837	6691	6543	6396	6115	5453	4658		
S2-24-615-C4	1/4	860	0.28	15.7	4687	4200	4058	3895	3561	3126	2488					
S2-24-620-C3	1/3		0.36	18.5	5300	4710	4557	4410	3993	3445	2607					
S2-24-630-C5	1/2		0.54	18.8	6439	5768	5599	5412	4993	4387						
S2-24-620-B7	3/4	1160	0.86	23	7148	6728	6619	6502	6268	6049	5831	5308	4315			
S2-24-625-B10	1		1.13	25	7917	7491	7391	7291	7060	6781	6501	6035	4850	2745		
S2-24-600-A7	3/4	1750	0.87	36	5070	4877	4828	4778	4676	4573	4455	4251	3911	3518	3161	2287
S2-24-604-A10	1		1.18	39	6297	6081	6027	5973	5865	5747	5627	5447	5084	4671	4203	
S2-24-610-A15	1½		1.70	40	8137	7904	7845	7787	7670	7559	7448	7281	6968	6571	6178	5106
S2-24-615-A20	2		2.28	41	9537	9310	9253	9197	9083	8961	8835	8646	8315	7915	7508	6559
S2-30-618-C7	3/4	860	0.79	23	9698	9066	8886	8707	8309	7892	7340	6370				
S2-30-625-C10	1		1.18	28	11515	10823	10644	10461	10097	9629	9051	7945				
S2-30-635-C15	1½		1.80	32	13290	12505	12291	12076	11647	11060	10192	7951				
S2-30-605-B7	3/4	1160	0.86	29	7911	7479	7369	7257	7034	6795	6551	6210	5496	4497	3377	
S2-30-610-B10	1		1.17	30	9662	9293	9201	9103	8872	8640	8392	7976	7204	6248	5108	
S2-30-615-B15	1½		1.72	31	12000	11565	11456	11348	11130	10890	10619	10200	9404	8327	6921	
S2-30-620-B20	2		2.29	33	13905	13434	13316	13198	12939	12665	12391	11954	11144	10136	8640	
S2-36-607-C7	3/4	860	0.82	27	9985	9347	9183	9012	8669	8255	7829	7039	5325	3679	2486	
S2-36-611-C10	1		1.11	30	12131	11529	11360	11187	10840	10449	10058	9289	7622	5532	3782	
S2-36-617-C15	1½		1.61	31	15162	14491	14324	14153	13810	13442	12926	12117	10512	7704	5270	
S2-36-600-B10	1	1160	1.21	34	8200	7791	7656	7515	7224	6913	6617	6214	5478	4679	3902	
S2-36-605-B15	1½		1.72	36	11977	11535	11424	11313	11077	10828	10580	10147	9384	8487	7337	5080
S2-36-609-B20	2		2.34	37	14957	14468	14345	14223	13976	13728	13480	13098	12411	11537	10483	7678
S2-36-614-B30	3		3.29	40	18400	17945	17832	17718	17490	17263	16965	16517	15787	15003	13722	10993
S2-42-602-C10	1	860	1.08	30	8673	7991	7811	7632	7254	6888	6531	5979	4937	3944	2850	
S2-42-608-C15	1½		1.73	32	14642	14035	13883	13732	13396	13058	12692	12072	10980	9558	8035	
S2-42-612-C20	2		2.42	33	18363	17675	17503	17331	16966	16600	16233	15619	14477	13041		
S2-42-617-C30	3		3.32	35	21840	21148	20975	20802	20440	20032	19624	18975	17694	16259	14629	8191
S2-42-627-C50	5		5.95	41	28811	27924	27702	27480	27037	26533	26023	25261	24002	22494	20376	13589
S2-48-407-C15	1½	860	1.84	43	18124	17081	16823	16565	16049	15499	14820	13815	12067	9984	7536	
S2-48-410-C20	2		2.40	44	21801	20853	20616	20362	19848	19333	18699	17684	15807	13843	11719	
S2-48-415-C30	3		3.58	48	27004	26027	25783	25539	24915	24272	23638	22726	21025	19172	16924	
S2-48-422-C50	5		5.91	53	34332	33166	32874	32583	31944	31257	30570	29594	27990	25869	23518	
S2-54-420-F50	5	690	5.76	52	41542	39736	39284	38845	38011	37177	36322	34995	32089	28911	25289	14535
S2-54-410-C50		860	5.68	53	35642	34502	34217	33932	33364	32826	32287	31334	29690	27722	25548	20120
S2-54-416-C75	7½		8.68	54	45612	44465	44179	43892	43319	42745	42051	40967	39103	37130	34973	30171

Performance certified is for Models S2 for installation type A: free inlet, free outlet. Power rating (Bhp) does not include transmission losses. Performance ratings do not include the effects of appurtenances (accessories). *Speed (RPM) shown is nominal. Performance is based on actual speed of test. The sound ratings shown are loudness values in fan sones at 5 ft (1.5 m) in a hemispherical free field calculated per AMCA Standard 301. Values are for installation type A: free inlet hemispherical sone levels.

SC3-Direct Drive - Level 3

GREENHECK
Building Value in Air.

Model Number	Motor HP	Fan RPM	Max BHP	Sones @ F.A.	CFM / Static Pressure in Inches WG											
					0.00	0.10	0.125	0.15	0.20	0.25	0.30	0.375	0.50	0.625	0.75	1.00
SCE3/SCS3 Performance Limits																
SC3-20-617-B4	1/4		0.29	22	3243	2990	2924	2851	2703	2529	2292	1796				
SC3-20-622-B3	1/3	1160	0.40	23	3766	3517	3451	3381	3241	3067	2871	2468				
SC3-20-630-B5	1/2		0.55	25	4394	4115	4049	3984	3809	3635	3448	3039				
SC3-20-307-A4	1/4		0.27	31	2984	2707	2629	2554	2410	2250	2083	1789	1213			
SC3-20-312-A3	1/3		0.40	33	3753	3486	3424	3364	3240	3087	2909	2623	2082	1415		
SC3-20-320-A5	1/2	1750	0.62	37	4673	4463	4383	4304	4152	4011	3873	3667	3222	2608	1804	
SC3-20-327-A7	3/4		0.92	41	5504	5189	5129	5069	4931	4772	4613	4365	3931	3335	2471	
SC3-20-429-A10	1		1.26	42	6005	5797	5745	5692	5564	5434	5303	5106	4739	4327	3763	
SC3-24-620-C4	1/4		0.28	16.7	4777	4292	4146	3999	3695	3312	2822					
SC3-24-627-C3	1/3	860	0.39	16.2	5612	5090	4940	4787	4420	3982	3385					
SC3-24-630-C5	1/2		0.45	18.2	5924	5401	5252	5094	4653	4184	3656					
SC3-24-412-B4	1/4		0.28	18.8	4685	4204	4105	4007	3762	3481	3172	2538				
SC3-24-417-B3	1/3		0.38	21	5446	4960	4843	4725	4461	4167	3905	3412				
SC3-24-617-B5	1/2	1160	0.60	24	5994	5634	5537	5440	5248	5053	4828	4472	3675			
SC3-24-625-B7	3/4		0.87	27	7249	6872	6772	6672	6462	6248	6013	5592	4773			
SC3-24-630-B10	1		1.10	28	7991	7644	7535	7426	7206	6984	6694	6203	5304			
SC3-24-407-A5	1/2		0.62	39	5559	5316	5250	5169	5010	4854	4691	4434	3963	3367	2586	
SC3-24-315-A7	3/4		0.88	40	7200	6785	6689	6593	6393	6186	6008	5746	5228	4642	3857	
SC3-24-415-A10	1	1750	1.17	46	7728	7431	7356	7276	7103	6940	6782	6541	6130	5680	5163	
SC3-24-615-A15	1½		1.81	49	8561	8331	8273	8216	8097	7976	7856	7674	7356	7005	6637	5750
SC3-24-620-A20	2		2.37	53	9721	9501	9446	9391	9281	9159	9033	8844	8488	8126	7757	6886
SC3-30-315-C4	1/4		0.30	16.5	7276	5972	5609	5236	4402	2816						
SC3-30-320-C3	1/3		0.40	19.0	8235	6951	6532	6111	5245	3909						
SC3-30-422-C5	1/2	860	0.59	21	9389	8340	8040	7711	6993	6222	4858					
SC3-30-623-C7	3/4		0.87	23	10396	9831	9655	9433	8937	8357	7699	6456				
SC3-30-627-C10	1		1.01	23	11192	10384	10182	9958	9484	8897	8174	6869				
SC3-30-409-B5	1/2		0.63	26	8794	8076	7878	7680	7286	6886	6363	5594	3748			
SC3-30-317-B7	3/4		0.85	29	10420	9538	9269	9010	8493	7941	7343	6384				
SC3-30-612-B10	1	1160	1.21	32	10679	10168	10038	9904	9637	9349	9047	8544	7622	6348		
SC3-30-620-B15	1½		1.87	36	13263	12742	12615	12489	12237	11942	11611	11091	10081	8865		
SC3-30-625-B20	2		2.32	40	14779	14160	14005	13849	13537	13220	12901	12376	11276	9927		
SC3-36-407-C5	1/2		0.60	25	11645	10275	9900	9546	8692	7632	6426					
SC3-36-415-C7	3/4		0.86	34	13452	12100	11762	11424	10596	9480	8239					
SC3-36-612-C10	1	860	1.21	25	14903	13880	13580	13281	12683	12079	11454	10212				
SC3-36-620-C15	1½		1.75	30	17206	16138	15847	15555	14959	14327	13561	12192				
SC3-36-627-C20	2		2.30	31	19898	18735	18408	18081	17299	16428	15538	13942				
SC3-36-305-B7	3/4		0.94	37	13250	12067	11799	11452	10652	9938	9223	7620	4470			
SC3-36-307-B10	1		1.18	38	14446	13289	13000	12698	12093	11443	10672	9209				
SC3-36-410-B15	1½	1160	1.82	43	17128	16145	15888	15629	15110	14561	13964	13052	11211	8411		
SC3-36-609-B20	2		2.42	48	17903	17169	16986	16802	16424	16015	15607	14993	13899	12434	10501	
SC3-36-617-B30	3		3.54	49	21781	20957	20751	20546	20134	19710	19269	18607	17398	15999	14133	
SC3-42-610-F7	3/4		0.85	25	14274	13009	12625	12182	11224	10210	8748	5893				
SC3-42-615-F10	1	690	1.16	27	16960	15417	15027	14641	13687	12645	11511	8704				
SC3-42-622-F15	1½		1.76	28	20327	18789	18421	17960	17008	15991	14609	11992				
SC3-42-629-F20	2		2.40	31	23088	21265	20790	20297	19236	18050	16564					
SC3-42-605-C10	1		1.16	35	14770	13609	13290	12964	12277	11524	10705	9283	6513			
SC3-42-610-C15	1½	860	1.64	34	17791	16813	16543	16272	15653	14934	14156	12957	9944			
SC3-42-615-C20	2		2.24	35	21138	19913	19598	19283	18657	18039	17251	15978	13640			
SC3-42-620-C30	3		3.11	36	24242	23108	22791	22474	21840	21181	20517	19111	16580	12206		
SC3-48-410-F7	3/4		0.90	32	18398	15714	14918	14090	12218	10042	6727					
SC3-48-414-F10	1		1.20	32	21562	18368	17420	16448	14580	12041	8226					
SC3-48-614-F15	1½	690	1.78	35	25271	23113	22519	21926	20713	19474	17794	14865				
SC3-48-619-F20	2		2.37	38	29125	26642	26019	25396	24108	22773	21122	18057				
SC3-48-625-F30	3		3.29	41	32762	30379	29640	28898	27385	25882	24151	20889				
SC3-48-605-C15	1½		1.80	45	23073	21487	21054	20621	19708	18766	17714	16029	12669	7307		
SC3-48-609-C20	2		2.33	48	26491	24711	24266	23812	22881	21974	21083	19377	16101	11261		
SC3-48-614-C30	3	860	3.44	51	31497	29785	29357	28909	27957	27004	26029	24538	21223			
SC3-48-622-C50	5		5.61	52	39085	37241	36752	36264	35287	34162	33029	31264	27766			
SC3-48-630-C75	7½		7.66	53	43290	41324	40745	40167	38989	37745	36536	34864	30731			
SC3-54-306-F15	1½		1.72	28	24805	22316	21660	20953	19422	17603	15619	12506				
SC3-54-311-F20	2	690	2.42	28	30602	27772	27138	26500	25218	23953	22581	19674	11567			
SC3-54-317-F30	3		3.47	31	36325	33687	33047	32411	31012	29503	27774	25025	18028			
SC3-54-328-F50	5		5.82	40	44402	41230	40512	39795	38189	36133	34392	30263	22490			
SC3-54-300-C20	2		2.47	42	22960	20143	19493	18842	17457	15965	14473	12260	8206			
SC3-54-307-C30	3	860	3.51	42	31594	29768	29284	28783	27774	26704	25565	23289	19595	15339	10240	
SC3-54-315-C50	5		5.79	45	42371	40506	40040	39569	38391	37237	36172	34553	31073	27246	20063	
SC3-54-323-C75	7½		9.00	50	51206	48980	48424	47828	46616	45404	44315	42712	39307	35027	29939	

Performance certified is for Models SC3 for installation type A: free inlet, free outlet. Power rating (Bhp) does not include transmission losses. Performance ratings do not include the effects of appurtenances (accessories). *Speed (RPM) shown is nominal. Performance is based on actual speed of test. The sound ratings shown are loudness values in fan sones at 5 ft (1.5 m) in a hemispherical free field calculated per AMCA Standard 301. Values are for installation type A: free inlet hemispherical sone levels.

SCR3-Direct Drive - Level 3

Reversible

GREENHECK
Building Value in Air.

Model Number	Motor HP	Fan RPM	Max BHP	Sones	CFM / Static Pressure in Inches WG											
					0.00	0.05	0.10	0.125	0.15	0.20	0.25	0.30	0.375	0.50	0.625	0.75
24 Performance Limits																
SCR3-24-627-C4	1/4	860	0.29	16.7	4981	4664	4269	4007	3498							
SCR3-24-632-C3	1/3		0.35	16.9	5478	5153	4731	4391	3789							
SCR3-24-416-B4	1/4	1160	0.29	18.1	4521	4241	3949	3784	3619	3015	2232					
SCR3-24-420-B3	1/3		0.37	19.3	5200	4904	4597	4434	4271	3815	2837					
SCR3-24-623-B5	1/2		0.58	22	6093	5869	5627	5499	5371	5029	4529	3791				
SCR3-24-632-B7	3/4		0.86	27	7389	7148	6896	6739	6582	6207	5689					
SCR3-24-410-A5	1/2	1750	0.57	32	5233	5028	4828	4730	4632	4403	4167	3921	3364			
SCR3-24-414-A7	3/4		0.83	34	6297	6114	5930	5834	5738	5546	5331	5108	4625			
SCR3-24-418-A10	1		1.15	35	7332	7141	6949	6853	6752	6552	6348	6112	5758	4623		
SCR3-24-425-A15	1½		1.67	38	8928	8701	8474	8364	8259	8050	7831	7581	7160	6055		
SCR3-24-626-A20	2		2.31	41	9935	9786	9636	9561	9486	9325	9155	8984	8707	8111	6996	
30 Performance																
SCR3-30-415-C4	1/4	860	0.29	16.6	6262	5732	5131	4718	4013							
SCR3-30-419-C3	1/3		0.38	17.2	7219	6523	5854	5466	4860							
SCR3-30-620-C5	1/2		0.56	18.8	8118	7694	7218	6953	6682	5738						
SCR3-30-629-C7	3/4		0.84	2	9694	9233	8450	7977	7404							
SCR3-30-412-B5	1/2	1160	0.58	24	7490	7051	6640	6429	6211	5688	4914					
SCR3-30-418-B7	3/4		0.88	27	9414	8921	8440	8206	7968	7466	6763	5490				
SCR3-30-423-B10	1		1.14	29	10658	10134	9606	9329	8999	8338	7672	6255				
SCR3-30-624-B15	1½		1.74	33	12167	11796	11425	11239	11041	10647	10032	9244	8158			
SCR3-30-630-B20	2		2.18	35	13226	12911	12595	12375	11987	11233	10437	9304				
SCR3-30-407-A10	1	1750	1.21	47	8583	8290	7998	7882	7765	7533	7258	6770	6243			
SCR3-30-410-A15	1½		1.63	46	10337	10022	9712	9571	9429	9146	8892	8652	8266	7375		
SCR3-30-413-A20	2		2.09	45	11779	11498	11216	11077	10943	10673	10403	10114	9643	8634		
SCR3-30-420-A30	3		3.34	53	15176	14806	14437	14258	14084	13737	13393	13070	12585	11691	10359	
SCR3-30-623-A50	5		5.5	63	17896	17658	17419	17300	17180	16942	16703	16454	16067	15380	14269	13199
36 Performance																
SCR3-36-412-C5	1/2	860	0.55	23	9047	8380	7589	7156	6726							
SCR3-36-419-C7	3/4		0.85	23	12243	11532	10734	10259	9750	8734						
SCR3-36-425-C10	1		1.15	27	14110	13544	12541	12029	11535	10271	8338					
SCR3-36-628-C15	1½		1.74	31	16432	15855	15258	14814	14370	13429	12309					
SCR3-36-406-B7	3/4	1160	0.84	38	9490	8991	8415	8053	7676							
SCR3-36-410-B10	1		1.14	38	10863	10436	9964	9700	9412	8797	8226	7493				
SCR3-36-415-B15	1½		1.71	38	14215	13624	13075	12814	12552	11874	11201	10530	9442			
SCR3-36-616-B20	2		2.2	44	15749	15311	14874	14666	14468	14071	13650	13183	12407			
SCR3-36-623-B30	3		3.44	49	19714	19293	18873	18658	18420	17943	17467	16951	16028	14204		
SCR3-36-630-B50	5		4.66	51	23117	22703	22290	22083	21876	21222	20473	19750	18648	16179		
42 Performance																
SCR3-42-417-F7	3/4	690	0.69	22	13597	12267	10835	9808	8589							
SCR3-42-620-F10	1		1.12	25	16651	15569	14511	13928	13315	11602						
SCR3-42-629-F15	1½		1.72	30	19201	18039	16406	15463	14600	12682						
SCR3-42-415-C10	1	860	1.15	30	16078	14907	13968	13436	12804	11234						
SCR3-42-422-C15	1½		1.77	35	18875	17758	16552	15875	15182	13699	11683					
SCR3-42-621-C20	2		2.28	36	21190	20336	19478	19048	18614	17612	16541	15213				
SCR3-42-630-C30	3		3.48	43	24181	23243	22221	21682	20821	18963	17704	16613				
SCR3-42-408-B15	1½	1160	1.76	50	15026	14328	13600	13216	12824	11978	10952	9650	7136			
SCR3-42-412-B20	2		2.33	51	18959	18189	17432	17066	16700	15890	15029	14017	11855			
SCR3-42-418-B30	3		3.47	54	23445	22661	21885	21501	21117	20314	19400	18384	16497			
SCR3-42-621-B50	5		5.54	60	28583	27949	27315	26999	26680	26042	25405	24704	23590	21563		
SCR3-42-630-B75	7½		8.55	73	32616	31921	31226	30878	30483	29683	28884	27018	25357	23149		
48 Performance																
SCR3-48-414-F7	3/4	690	0.87	28	18011	16528	14580	13364	11950							
SCR3-48-418-F10	1		1.17	30	20555	19027	16931	15671	14268	10900						
SCR3-48-619-F15	1½		1.75	33	23382	22284	20801	19931	19057	17136	14215					
SCR3-48-624-F20	2		2.29	37	26551	25172	23613	22714	21701	19145	15868					
SCR3-48-414-C15	1½	860	1.69	40	22448	21297	19941	19200	18353	16384	14153					
SCR3-48-418-C20	2		2.27	42	25619	24430	23020	22243	21306	19279	16958	14401				
SCR3-48-620-C30	3		3.52	48	30092	29264	28435	27770	27003	25523	24096	22719	19594			
SCR3-48-629-C50	5		5.6	56	35190	33738	32249	31430	30610	28531	26291	24091	20049			
SCR3-48-403-B15	1½	1160	1.6	56	14101	13313	12413	11885	11323	10099	8759					
SCR3-48-407-B20	2		2.31	69	20861	20047	19222	18773	18324	17285	16039	14683	12327			
SCR3-48-412-B30	3		3.57	69	28014	27172	26330	25844	25330	24303	23202	22039	19654	15119		
SCR3-48-418-B50	5		5.57	72	34556	33674	32792	32352	31787	30634	29386	27973	25647	21187		
SCR3-48-417-B75	7½		8.95	69	37004	36466	35928	35659	35390	34852	34216	33475	32363	30250	27397	
SCR3-48-420-B100	10		11.14	75	41055	40543	40032	39776	39520	39008	38383	37504	36185	34026	31482	28124
54 Performance																
SCR3-54-409-F15	1½	690	1.62	36	21244	19996	18972	18303	17490	15579	12407					
SCR3-54-413-F20	2		2.31	35	25286	24141	22996	22310	21495	19866	17523					
SCR3-54-420-F30	3		3.48	35	32665	31099	29514	28700	27784	25855	23632	20807				
SCR3-54-623-F50	5		5.52	46	38452	37244	36028	35293	34558	33088	31492	29814	27135			
SCR3-54-409-C20	2	860	2.38	51	26479	25468	24556	24145	23734	22661	21344	19757	16344			
SCR3-54-410-C30	3		3.37	53	28003	26997	26093	25707	25320	24416	23141	21715	18977			
SCR3-54-417-C50	5		5.81	52	37090	35925	34761	34229	33715	32688	31591	30131	27681	21769		
SCR3-54-618-C75	7½		8.46	61	41795	40904	40014	39569	39124	38309	37501	36693	35197	31916	25633	
SCR3-54-625-C100	10		11.7	68	50142	49192	48243	47768	47283	46066	44850	43285	40770	37198	33806	

Performance certified is for Model SCR3 for installation type A: free inlet, free outlet. Power rating (Bhp) does not include transmission losses. Performance ratings do not include the effects of appurtenances (accessories). *Speed (RPM) shown is nominal. Performance is based on actual speed of test. The sound ratings shown are loudness values in fan sones at 5 ft (1.5 m) in a hemispherical free field calculated per AMCA Standard 301. Values are for installation type A: free inlet hemispherical sone levels.

GREENHECK
Building Value in Air.

Using The Performance Table

Shown below is a portion of a typical performance table used in this catalog. Performance data shown offers the best selections for each propeller type ("L" or "H") relative to sound, RPM and static pressure.

Consider "L" type propellers first for most applications.

Many sidewall applications can be met with the "L" type propeller. When using the performance tables, look first at the "L" selections, because they offer the lowest speed and sound levels.

Model Number	Motor HP	Fan RPM	Max BHP	*Sones	CFM / Static Pressure in Inches WG											
					0.00	0.10	0.125	0.15	0.20	0.25	0.30	0.375	0.50	0.625	0.75	1.00
Level 1 Performance	Max RPM L - 1085 H - 1221				Max Motor Frame Size - 56							TS = RPM x 5.235				
SB-1L20-4	1/4	705	0.17	11.6	3606	2836	2451									
		810	0.25	13.3	4143	3510	3325	3084								
		861	0.30	14.3	4404	3795	3672	3455								
SB-1H20-4	1/4	773	0.17	11.1	2904	2453	2293	2112	1596	924	676	304				
		892	0.27	14.1	3351	2987	2873	2744	2436	2011	1409	886	348			
		953	0.30	16.2	3581	3247	3148	3034	2769	2469	2002	1160	657			
SB-1L20-3	1/3	889	0.33	14.9	4547	3950	3830	3655	3067							
		947	0.40	16.1	4844	4271	4156	4044	3648							
SB-1H20-3	1/3	998	0.37	16.7	3750	3436	3342	3244	3006	2727	2398	1588	873	393		
		1039	0.40	17.2	3904	3608	3517	3427	3212	2954	2676	2037	1064	603		
SB-1L20-5	1/2	1021	0.50	17.0	5222	4675	4566	4461	4181	3747						
		1085	0.60	17.9	5550	5021	4919	4817	4621	4269	3712					
SB-1H20-5	1/2	1107	0.50	18.0	4159	3885	3805	3720	3534	3315	3065	2599	1368	935	502	
		1221	0.60	20	4587	4339	4277	4203	4049	3873	3675	3333	2514	1456	1064	

CFM values shown in black are the most efficient selections. Values shown in gray are not recommended.

"L" type low pressure propeller

"H" type high pressure propeller

Shows level of construction based on fan RPM & motor frame size. See Performance Charts.

Note that each max. Bhp is cataloged at a 1.0 and 1.2 service factor. See page 4.

Optimum selection range for the "L" type propeller.

Optimum selection range for the "H" type propeller.

SB-20 Belt Drive

Model Number	Motor HP	Fan RPM	Max BHP	*Sones	CFM / Static Pressure in Inches WG											
					0.00	0.10	0.125	0.15	0.20	0.25	0.30	0.375	0.50	0.625	0.75	1.00
Level 1 Performance	Max RPM L - 1085 H - 1221				Max Motor Frame Size - 56							TS = RPM x 5.235				
SB-1L20-4	1/4	705	0.17	11.6	3606	2836	2451									
		810	0.25	13.3	4143	3510	3325	3084								
		861	0.30	14.3	4404	3795	3672	3455								
SB-1H20-4	1/4	773	0.17	11.1	2904	2453	2293	2112	1596	924	676	304				
		892	0.27	14.1	3351	2987	2873	2744	2436	2011	1409	886	348			
		953	0.30	16.2	3581	3247	3148	3034	2769	2469	2002	1160	657			
SB-1L20-3	1/3	889	0.33	14.9	4547	3950	3830	3655	3067							
		947	0.40	16.1	4844	4271	4156	4044	3648							
SB-1H20-3	1/3	998	0.37	16.7	3750	3436	3342	3244	3006	2727	2398	1588	873	393		
		1039	0.40	17.2	3904	3608	3517	3427	3212	2954	2676	2037	1064	603		
SB-1L20-5	1/2	1021	0.50	17.0	5222	4675	4566	4461	4181	3747						
		1085	0.60	17.9	5550	5021	4919	4817	4621	4269	3712					
SB-1H20-5	1/2	1107	0.50	18.0	4159	3885	3805	3720	3534	3315	3065	2599	1368	935	502	
		1221	0.60	20	4587	4339	4277	4203	4049	3873	3675	3333	2514	1456	1064	
Level 2 Performance	Max RPM L - 1241 H - 1391				Max Motor Frame Size - 143T							TS = RPM x 5.235				
SB-2L20-5	1/2	1021	0.50	17.0	5222	4675	4566	4461	4181	3747						
		1085	0.60	17.9	5550	5021	4919	4817	4621	4269	3712					
SB-2H20-5	1/2	1107	0.50	18.0	4159	3885	3805	3720	3534	3315	3065	2599	1368	935	502	
		1221	0.60	20	4587	4339	4277	4203	4049	3873	3675	3333	2514	1456	1064	
SB-2L20-7	3/4	1168	0.75	20	5974	5466	5371	5275	5090	4861	4527					
		1241	0.90	22	6348	5853	5764	5674	5496	5325	5053	4479				
SB-2H20-7	3/4	1262	0.75	21	4742	4501	4441	4375	4226	4065	3883	3562	2849	1635	1255	495
		1391	0.90	25	5226	5008	4954	4899	4774	4639	4493	4244	3741	3005	1886	1138

CFM values shown in black are the most efficient selections. Values shown in gray are not recommended.

Performance certified is for Model SB for installation type A: free inlet, free outlet. Power rating (Bhp) does not include transmission losses. Performance ratings do not include the effects of appurtenances (accessories). *Speed (RPM) shown is nominal. Performance is based on actual speed of test. The sound ratings shown are loudness values in fan sones at 5 ft (1.5 m) in a hemispherical free field calculated per AMCA Standard 301. Values are for installation type A: free inlet hemispherical sone levels. *Sones shown apply to the highest cataloged CFM in black type at each fan RPM. For selections at other CFM and static pressure points, refer to CAPS, the Computer Aided Product Selection Program.

SB-24 Belt Drive

GREENHECK
Building Value in Air.

Model Number	Motor HP	Fan RPM	Max BHP	*Sones	CFM / Static Pressure in Inches WG											
					0.00	0.10	0.125	0.15	0.20	0.25	0.30	0.375	0.50	0.625	0.75	1.00
Level 1 Performance		Max RPM L - 809 H - 1010					Max Motor Frame Size - 56					TS = RPM x 6.283				
SB-1L24-4	1/4	513	0.19	10.3	4818	3784										
		558	0.25	11.0	5241	4402	3971									
		593	0.30	11.8	5569	4803	4551	4050								
SB-1H24-4	1/4	674	0.17	10.2	3524	2894	2680	2416	1616	1155	821					
		785	0.30	13.3	4105	3618	3445	3267	2848	2105	1655	1133	444			
SB-1L24-3	1/3	614	0.33	12.4	5766	5040	4807	4396								
		653	0.40	12.8	6133	5466	5256	5037								
SB-1H24-3	1/3	829	0.33	14.8	4335	3877	3734	3568	3220	2595	2006	1445	769			
		877	0.36	16.1	4586	4157	4041	3887	3564	3179	2472	1845	1108	491		
SB-1L24-5	1/2	704	0.50	13.8	6612	6000	5831	5628	4992							
		748	0.60	14.8	7025	6455	6300	6128	5723	4939						
SB-1H24-5	1/2	961	0.55	18.5	5025	4641	4535	4428	4145	3846	3485	2574	1701	1103	540	
		1010	0.60	19.9	5281	4920	4819	4717	4471	4193	3902	3093	2108	1439	904	
SB-1L24-7	3/4	775	0.67	15.5	7279	6732	6582	6430	6061	5383						
		809	0.76	17.4	7598	7079	6935	6792	6454	5948	5237					
Level 2 Performance		Max RPM L - 986 H - 1148					Max Motor Frame Size - 143T					TS = RPM x 6.283				
SB-2L24-5	1/2	688	0.47	13.5	6461	5833	5652	5444	4730							
		704	0.50	13.8	6612	6000	5831	5628	4992							
		748	0.60	14.8	7025	6455	6300	6128	5723	4939						
SB-2H24-5	1/2	961	0.55	18.5	5025	4641	4535	4428	4145	3846	3485	2574	1701	1103	540	
		1010	0.60	19.9	5281	4920	4819	4717	4471	4193	3902	3093	2108	1439	904	
SB-2L24-7	3/4	805	0.75	17.1	7560	7038	6894	6750	6408	5882	5170					
		856	0.90	21	8039	7555	7419	7284	6989	6654	6011					
SB-2H24-7	3/4	1110	0.85	23	5804	5476	5392	5299	5115	4872	4619	4200	2975	2199	1601	626
		1148	0.90	25	6003	5685	5606	5518	5340	5122	4882	4502	3343	2510	1853	910
SB-2L24-10	1	886	1.00	23	8321	7856	7726	7595	7326	7003	6512					
		942	1.20	28	8847	8409	8294	8171	7925	7643	7340	6476				
SB-2L24-15	1½	960	1.27	30	9016	8587	8476	8355	8114	7847	7549	6769				
		986	1.37	33	9260	8842	8738	8620	8385	8139	7849	7205				
Level 3 Performance		Max RPM L - 1127 H - 1485					Max Motor Frame Size - 145T					TS = RPM x 6.283				
SB-3L24-7	3/4	838	0.49	15.5	6598	6001	5836	5599	5047	4507						
		964	0.75	21	7590	7084	6945	6802	6429	5961	5459	4645				
		1024	0.90	24	8062	7592	7463	7329	7034	6634	6154	5492				
SB-3H24-7	3/4	1099	0.50	18.5	5732	5377	5281	5184	4983	4756	4514	4095	2979			
		1263	0.78	22	6588	6286	6203	6119	5952	5776	5593	5277	4680	3710	2590	
		1330	0.90	24	6937	6650	6576	6496	6337	6174	6007	5721	5195	4494	3495	
SB-3L24-10	1	1061	1.00	25	8354	7902	7778	7651	7392	7016	6588	5914				
		1127	1.20	27	8873	8454	8337	8220	7977	7686	7321	6668	5569			
SB-3H24-10	1	1392	1.00	25	7261	6987	6918	6842	6690	6538	6378	6124	5639	5071	4170	
		1485	1.28	28	7746	7489	7425	7358	7216	7073	6928	6704	6271	5793	5208	3470

CFM values shown in black are the most efficient selections. Values shown in gray are not recommended.

Performance certified is for Model SB for installation type A: free inlet, free outlet. Power rating (Bhp) does not include transmission losses. Performance ratings do not include the effects of appurtenances (accessories). *Speed (RPM) shown is nominal. Performance is based on actual speed of test. The sound ratings shown are loudness values in fan sones at 5 ft (1.5 m) in a hemispherical free field calculated per AMCA Standard 301. Values are for installation type A: free inlet hemispherical sone levels. *Sones shown apply to the highest cataloged CFM in black type at each fan RPM. For selections at other CFM and static pressure points, refer to CAPS, the Computer Aided Product Selection Program.

SB-30 Belt Drive

GREENHECK
Building Value in Air.

Model Number	Motor HP	Fan RPM	Max BHP	*Sones	CFM / Static Pressure in Inches WG											
					0.00	0.10	0.125	0.15	0.20	0.25	0.30	0.375	0.50	0.625	0.75	1.00
Level 1 Performance		Max RPM L - 696 H - 882					Max Motor Frame Size - 56						TS = RPM x 7.854			
SB-1L30-4	1/4	390	0.16	9.5	6453											
		448	0.25	10.9	7413	5790										
		475	0.30	11.6	7860	6394	5880									
SB-1H30-4	1/4	503	0.17	9.4	5747	4619	4164									
		577	0.25	11.8	6593	5682	5389	5018								
		610	0.30	12.6	6970	6129	5860	5559	4743							
SB-1L30-3	1/3	491	0.33	12.1	8125	6742	6249									
		523	0.40	13.0	8654	7427	6970	6503								
SB-1H30-3	1/3	631	0.33	13.1	7210	6396	6156	5888	5163							
		675	0.41	14.1	7713	6950	6763	6515	5939	5160						
SB-1L30-5	1/2	564	0.50	14.3	9333	8261	7862	7436								
		598	0.60	15.5	9895	8898	8583	8185	7366							
SB-1H30-5	1/2	725	0.50	15.5	8284	7571	7398	7213	6746	6145						
		769	0.60	16.9	8787	8112	7949	7785	7376	6876	6248					
SB-1L30-7	3/4	645	0.75	17.2	10673	9766	9508	9190	8446	7562						
		685	0.9	18.7	11335	10496	10253	10009	9332	8622						
SB-1H30-7	3/4	827	0.75	19.1	9450	8819	8667	8515	8188	7779	7279	6326				
		882	0.90	22	10078	9484	9342	9199	8914	8560	8174	7424				
SB-1L30-10	1	696	0.94	19.2	11517	10696	10456	10217	9570	8874						
Level 2 Performance		Max RPM L - 950 H - 1221					Max Motor Frame Size - 184T						TS = RPM x 7.854			
SB-2L30-7	3/4	645	0.75	17.2	10673	9766	9508	9190	8446	7562						
		685	0.90	18.7	11335	10496	10253	10009	9332	8622						
SB-2H30-7	3/4	827	0.75	19.1	9450	8819	8667	8515	8188	7779	7279	6326				
		882	0.90	22	10078	9484	9342	9199	8914	8560	8174	7424				
SB-2L30-10	1	710	1.00	19.7	11748	10949	10714	10479	9872	9192	8383					
		754	1.20	21	12477	11736	11519	11298	10806	10175	9528					
SB-2H30-10	1	917	1.00	23	10478	9906	9768	9631	9357	9049	8680	8012				
		968	1.20	26	11061	10519	10385	10255	9996	9736	9403	8847	7570			
SB-2L30-15	1½	812	1.50	24	13436	12749	12570	12364	11954	11426	10838	9893				
		864	1.81	27	14297	13650	13489	13309	12923	12522	11971	11132				
SB-2H30-15	1½	1048	1.50	29	11975	11474	11349	11227	10987	10747	10507	10029	9071			
		1110	1.80	31	12683	12211	12092	11974	11747	11521	11294	10901	10090	9019		
SB-2L30-20	2	895	2.00	29	14810	14186	14030	13868	13496	13123	12633	11830				
		950	2.41	32	15720	15132	14985	14838	14503	14152	13790	13039	11760			
SB-2H30-20	2	1152	2.00	33	13163	12708	12594	12480	12259	12041	11823	11483	10749	9811		
		1221	2.40	36	13951	13522	13414	13307	13095	12889	12683	12374	11734	10955	9980	
Level 3 Performance		Max RPM L - 1100 H - 1432					Max Motor Frame Size - 184T						TS = RPM x 7.854			
SB-3L30-20	2	824	1.51	23	13052	12289	12098	11898	11483	11006	10403	9137				
		905	2.01	26	14335	13640	13467	13293	12924	12540	12102	11263	9366			
		961	2.40	29	15222	14568	14404	14241	13905	13549	13167	12519	10795			
SB-3H30-20	2	1076	1.53	30	11401	11026	10932	10833	10601	10369	10102	9652	8854	7967	6444	
		1182	2.04	35	12524	12182	12097	12012	11820	11609	11398	11026	10338	9590	8780	5817
		1260	2.46	38	13351	13030	12950	12870	12708	12510	12312	12015	11376	10705	9980	8065
SB-3L30-30	3	1036	3.01	35	16410	15803	15651	15500	15196	14874	14544	13993	12801	11093		
		1100	3.61	41	17423	16852	16709	16566	16281	15991	15680	15201	14241	12775	11254	
SB-3H30-30	3	1353	3.01	44	14336	14037	13963	13888	13739	13574	13390	13113	12580	11984	11343	9939
		1432	3.53	49	15173	14891	14820	14750	14609	14468	14297	14036	13586	13022	12446	11176

CFM values shown in black are the most efficient selections. Values shown in gray are not recommended.

Performance certified is for Model SB for installation type A: free inlet, free outlet. Power rating (BHP) does not include transmission losses. Performance ratings do not include the effects of appurtenances (accessories). *Speed (RPM) shown is nominal. Performance is based on actual speed of test. The sound ratings shown are loudness values in fan sones at 5 ft (1.5 m) in a hemispherical free field calculated per AMCA Standard 301. Values are for installation type A: free inlet hemispherical sone levels. *Sones shown apply to the highest cataloged CFM in black type at each fan RPM. For selections at other CFM and static pressure points, refer to CAPS, the Computer Aided Product Selection Program.

SB-36 Belt Drive

GREENHECK
Building Value in Air.

Model Number	Motor HP	Fan RPM	Max BHP	*Sones	CFM / Static Pressure in Inches WG											
					0.00	0.10	0.125	0.15	0.20	0.25	0.30	0.375	0.50	0.625	0.75	1.00
Level 1 Performance		Max RPM L - 551			H - 694		Max Motor Frame Size - 56					TS = RPM x 7.854				
SB-1L36-3	1/3	329	0.25	12.3	9491	6448										
		361	0.34	11.8	10415	7958	6849									
		384	0.41	11.8	11078	8915	8018	6662								
SB-1H36-3	1/3	410	0.25	10.0	9011	6831	6112									
		450	0.33	11.1	9890	7967	7391	6725								
		481	0.41	12.1	10572	8812	8290	7743								
SB-1L36-5	1/2	412	0.50	12.7	11886	9913	9250	8354								
		438	0.61	13.6	12636	10809	10290	9572								
SB-1H36-5	1/2	521	0.52	13.5	11451	9845	9398	8912	7811							
		556	0.63	14.9	12220	10729	10328	9891	8958							
SB-1L36-7	3/4	471	0.76	14.5	13588	11925	11442	10947	9408							
		500	0.90	15.3	14425	12890	12435	11981	10808	8915						
SB-1H36-7	3/4	591	0.75	16.4	12989	11605	11223	10844	9985	9016						
		628	0.91	18.2	13802	12520	12156	11800	11035	10205	9228					
SB-1L36-10	1	518	1.01	16.1	14944	13482	13044	12605	11569	10084						
		551	1.21	17.7	15896	14558	14146	13733	12908	11731	10007					
SB-1H36-10	1	651	1.01	18.8	14308	13083	12731	12386	11668	10880	9995					
		694	1.23	20	15253	14135	13798	13468	12824	12111	11358	9875				
Level 2 Performance		Max RPM L - 693			H - 870		Max Motor Frame Size - 184T					TS = RPM x 7.854				
SB-2L36-10	1	518	1.01	16.1	14944	13482	13044	12605	11569	10084						
		550	1.21	17.6	15867	14525	14113	13699	12873	11682	9934					
SB-2H36-10	1	651	1.01	18.8	14308	13083	12731	12386	11668	10880	9995					
		694	1.23	20	15253	14135	13798	13468	12824	12111	11358	9875				
SB-2L36-15	1½	593	1.51	20	17108	15909	15527	15144	14377	13512	12329					
		631	1.81	22	18204	17113	16759	16400	15680	14959	14025	12176				
SB-2H36-15	1½	744	1.50	23	16352	15358	15021	14714	14106	13486	12810	11706				
		792	1.80	27	17407	16519	16198	15894	15316	14753	14145	13170				
SB-2L36-20	2	653	2.01	24	18839	17784	17467	17120	16424	15728	14942	13287				
		693	2.41	27	19993	18999	18744	18416	17762	17106	16450	15154				
SB-2H36-20	2	821	2.02	30	18044	17217	16907	16601	16043	15496	14935	14011	12258			
		870	2.40	34	19121	18388	18096	17803	17259	16736	16223	15389	13871			
Level 3 Performance		Max RPM L - 819			H - 1321		Max Motor Frame Size - 184T					TS = RPM x 7.854				
SB-3L36-20	2	614	1.52	18.1	16901	15679	15294	14909	14075	13113	11866					
		675	2.02	20	18580	17464	17178	16828	16128	15335	14463	12727				
		716	2.41	22	19709	18646	18404	18098	17438	16759	15972	14576				
SB-3H36-20	2	833	1.52	26	15014	14373	14212	14041	13682	13275	12740	11908	10095			
		915	2.04	30	16492	15908	15762	15616	15299	14972	14598	13867	12585	10735	8063	
		967	2.40	33	17429	16877	16739	16600	16313	16003	15694	15059	13876	12427	10502	
SB-3L36-30	3	771	3.01	25	21223	20222	19997	19772	19169	18556	17898	16802	14296			
		819	3.60	28	22544	21590	21378	21166	20658	20081	19504	18511	16505			
SB-3H36-30	3	1046	3.00	38	18853	18342	18215	18087	17831	17554	17268	16833	15767	14646	13192	
		1106	3.60	40	19935	19452	19331	19210	18968	18721	18450	18044	17147	16121	15045	11743
SB-3H36-50	5	1241	5.01	52	22368	21937	21830	21722	21507	21291	21076	20715	20113	19273	18372	16280
		1321	6.00	59	23810	23405	23304	23203	23001	22799	22596	22277	21711	21077	20233	18473

CFM values shown in black are the most efficient selections. Values shown in gray are not recommended.

Performance certified is for Model SB for installation type A: free inlet, free outlet. Power rating (Bhp) does not include transmission losses. Performance ratings do not include the effects of appurtenances (accessories). *Speed (RPM) shown is nominal. Performance is based on actual speed of test.The sound ratings shown are loudness values in fan sones at 5 ft (1.5 m) in a hemispherical free field calculated per AMCA Standard 301. Values are for installation type A: free inlet hemispherical sone levels.*Sones shown apply to the highest cataloged CFM in black type at each fan RPM. For selections at other CFM and static pressure points,refer to CAPS, the Computer Aided Product Selection Program.

SB-42 Belt Drive

GREENHECK
Building Value in Air.

Model Number	Motor HP	Fan RPM	Max BHP	*Sones	CFM / Static Pressure in Inches WG											
					0.00	0.10	0.125	0.15	0.20	0.25	0.30	0.375	0.50	0.625	0.75	1.00
Level 1 Performance		Max RPM L - 424			H - 533		Max Motor Frame Size - 145T					TS = RPM x 10.995				
SB-1L42-3	1/3	250	0.24	9.4	11651											
		275	0.33	10.3	12816	8583										
		294	0.40	11.1	13701	10026										
SB-1H42-3	1/3	314	0.25	9.4	10844	7332										
		345	0.33	11.1	11915	9126	7744									
		369	0.40	12.6	12744	10191	9283									
SB-1L42-5	1/2	316	0.50	12.0	14726	11363	10252									
		335	0.60	13.0	15612	12415	11671	10248								
SB-1H42-5	1/2	400	0.51	14.7	13814	11527	10841	9931								
		426	0.61	16.3	14712	12605	11980	11333								
SB-1L42-7	3/4	362	0.75	14.5	16870	13939	13189	12422								
		385	0.92	15.8	17942	15273	14451	13804	11298							
SB-1H42-7	3/4	460	0.78	18.5	15887	13987	13420	12834	11361							
		482	0.90	20	16646	14868	14327	13784	12592	10507						
SB-1L42-10	1	398	1.00	16.8	18548	16016	15189	14528	12837							
		424	1.21	18.8	19759	17478	16705	15953	14777							
SB-1H42-10	1	500	1.00	20	17268	15573	15060	14539	13448	11853						
		533	1.22	21	18408	16849	16388	15899	14900	13752	11887					
Level 2 Performance		Max RPM L - 723			H - 907		Max Motor Frame Size - 184T					TS = RPM x 10.995				
SB-2L42-10	1	398	1.00	16.8	18548	16016	15189	14528	12837							
		424	1.21	18.8	19759	17478	16705	15953	14777							
SB-2H42-10	1	500	1.00	21	17268	15573	15060	14539	13448	11853						
		533	1.22	22	18408	16849	16388	15899	14900	13752	11887					
SB-2L42-15	1½	456	1.50	21	21251	19152	18532	17809	16577	15188						
		484	1.80	23	22555	20599	20064	19420	18117	17086	15458					
SB-2H42-15	1½	577	1.53	24	19927	18529	18109	17678	16773	15831	14681					
		608	1.81	26	20998	19701	19302	18903	18053	17182	16275	14193				
SB-2L42-20	2	502	2.01	24	23394	21521	21006	20440	19128	18098	16824					
		532	2.40	27	24792	23046	22560	22074	20881	19757	18819	16579				
SB-2H42-20	2	630	2.00	28	21758	20527	20142	19757	18951	18122	17251	15564				
		673	2.41	31	23243	22131	21771	21411	20682	19906	19122	17893				
SB-2L42-30	3	575	3.01	32	26796	25212	24762	24312	23339	22193	21216	19836				
		611	3.65	31	28474	26984	26586	26162	25316	24279	23201	21952	18527			
SB-2H42-30	3	721	3.00	36	24900	23864	23572	23236	22564	21861	21137	20017	17604			
		766	3.61	40	26455	25479	25235	24931	24298	23664	22982	21961	20125	16908		
SB-2L42-50	5	681	5.08	36	31736	30400	30066	29712	28952	28192	27265	25814	23967	20093		
		723	6.00	39	33693	32435	32120	31805	31102	30386	29642	28275	26322	24165		
SB-2H42-50	5	853	4.99	48	29459	28583	28364	28145	27603	27035	26466	25556	24003	22312	19563	
		907	5.95	56	31324	30500	30294	30088	29630	29095	28561	27738	26299	24797	22915	
Level 3 Performance		Max RPM L - 762			H - 951		Max Motor Frame Size - 184T					TS = RPM x 10.995				
SB-3L42-30	3	527	1.99	18.3	22520	20843	20397	19944	18862	17664	16166					
		606	3.00	24	25896	24438	24073	23695	22908	21971	20980	19316				
		640	3.61	26	27349	25968	25623	25278	24537	23737	22813	21321	17720			
SB-3H42-30	3	657	1.99	24	19872	18805	18554	18303	17771	17180	16461	15333	13065			
		755	3.00	30	22836	21890	21671	21453	21016	20567	20053	19187	17554	15662		
		800	3.60	31	24197	23301	23090	22883	22471	22059	21605	20878	19377	17765	15725	
SB-3L42-50	5	714	5.02	30	30512	29274	28964	28655	28028	27360	26666	25424	23169	19687		
		762	6.01	33	32563	31403	31113	30823	30243	29634	29008	27942	25934	23434		
SB-3H42-50	5	893	5.01	37	27010	26207	26007	25816	25447	25078	24709	24107	22961	21608	20168	16141
		951	6.00	43	28764	28010	27822	27634	27286	26939	26592	26072	25063	23863	22589	19606

CFM values shown in black are the most efficient selections. Values shown in gray are not recommended.

Performance certified is for Model SB for installation type A: free inlet, free outlet. Power rating (Bhp) does not include transmission losses. Performance ratings do not include the effects of appurtenances (accessories). *Speed (RPM) shown is nominal. Performance is based on actual speed of test. The sound ratings shown are loudness values in fan sones at 5 ft (1.5 m) in a hemispherical free field calculated per AMCA Standard 301. Values are for installation type A: free inlet hemispherical sone levels. *Sones shown apply to the highest cataloged CFM in black type at each fan RPM. For selections at other CFM and static pressure points, refer to CAPS, the Computer Aided Product Selection Program.

SB-48 Belt Drive

GREENHECK
Building Value in Air.

Model Number	Motor HP	Fan RPM	Max BHP	*Sones	CFM / Static Pressure in Inches WG											
					0.00	0.10	0.125	0.15	0.20	0.25	0.30	0.375	0.50	0.625	0.75	1.00
Level 1 Performance		Max RPM	L - 355		H - 429		Max Motor Frame Size - 145T					TS = RPM x 12.566				
SB-1L48-5	1/2	231	0.31	8.6	14885											
		266	0.50	9.7	17140	12381										
		282	0.60	10.5	18171	14077	11902									
SB-1H48-5	1/2	278	0.33	9.6	14144	9240										
		320	0.50	11.3	16281	12822	11273	8844								
		341	0.61	12.3	17349	14214	13047	11371								
SB-1L48-7	3/4	305	0.76	11.8	19653	16196	14706	12401								
		324	0.91	13.0	20877	17700	16601	14948								
SB-1H48-7	3/4	368	0.76	13.6	18723	15953	15022	13860								
		393	0.93	15.5	19995	17450	16655	15783	13052							
SB-1L48-10	1	335	1.00	13.7	21586	18559	17626	16200								
		355	1.20	15.4	22875	20096	19220	18193	14778							
SB-1H48-10	1	408	1.04	16.4	20758	18314	17617	16777	14587							
		429	1.21	1.3	21827	19513	18907	18147	16322	13506						
Level 2 Performance		Max RPM	L - 608		H - 734		Max Motor Frame Size - 184T					TS = RPM x 12.566				
SB-2L48-10	1	335	1.00	13.7	21586	18559	17626	16200								
		355	1.20	15.4	22875	20096	19220	18193	14778							
SB-2H48-10	1	408	1.04	16.4	20758	18314	17617	16777	14587							
		429	1.21	19.3	21827	19513	18907	18147	16322	13506						
SB-2L48-15	1½	384	1.51	17.9	24744	22197	21482	20668	18419							
		407	1.80	18.9	26226	23841	23203	22474	20720	17923						
SB-2H48-15	1½	462	1.51	21	23506	21374	20811	20248	18770	16860	13759					
		491	1.81	22	24981	22990	22460	21930	20671	19129	16981					
SB-2L48-20	2	422	2.00	19.6	27192	24904	24289	23637	22154	19746						
		448	2.40	21	28868	26733	26154	25575	24229	22469	19898					
SB-2H48-20	2	509	2.02	23	25897	23985	23474	22963	21831	20485	18700	14388				
		540	2.41	24	27474	25681	25206	24724	23761	22529	21119	18065				
SB-2L48-30	3	483	3.03	23	31123	29170	28633	28096	26963	25668	23839	19730				
		513	3.60	28	33056	31241	30735	30230	29218	28043	26799	23721				
SB-2H48-30	3	582	3.01	27	29611	27947	27527	27081	26187	25232	24055	21925				
		618	3.61	29	31442	29875	29484	29078	28236	27395	26391	24703	20285			
SB-2L48-50	5	572	5.02	33	36858	35237	34822	34368	33461	32554	31504	29811	24906			
		608	5.99	36	39177	37652	37271	36864	36010	35157	34288	32745	29209			
SB-2H48-50	5	688	4.99	34	35004	33596	33244	32893	32158	31402	30646	29317	26560	22373		
		734	6.05	39	37344	36025	35695	35365	34700	33991	33283	32220	29911	26937	22215	
Level 3 Performance		Max RPM	L - 686		H - 862		Max Motor Frame Size - 215T					TS = RPM x 12.566				
SB-3L48-30	3	415	1.99	18.0	27276	24912	24215	23465	21703	19225						
		477	3.03	23	31351	29261	28772	28223	26914	25381	23672					
		506	3.61	25	33257	31277	30810	30350	29181	27830	26385	23228				
SB-3H48-30	3	519	1.98	24	23494	22018	21590	21159	20227	19128	18054	16079				
		597	3.01	30	27025	25742	25421	25066	24316	23547	22590	21178	18405			
		634	3.62	33	28700	27492	27190	26888	26184	25479	24681	23333	20969	17480		
SB-3L48-50	5	565	5.02	30	37135	35361	34918	34499	33657	32570	31377	29437	24082			
		600	6.02	33	39435	37765	37347	36934	36157	35241	34217	32427	28734			
SB-3H48-50	5	707	5.01	41	32004	30921	30650	30379	29816	29183	28550	27492	25489	23319	20320	
		754	6.01	44	34132	33116	32862	32608	32100	31530	30937	30047	28205	26350	24136	
SB-3L48-75	7½	646	7.51	38	42459	40907	40520	40132	39389	38667	37749	36264	33435	28965		
		686	9.00	44	45088	43627	43262	42896	42175	41495	40773	39429	36866	33882		
SB-3H48-75	7½	809	7.51	48	36622	35675	35438	35202	34728	34249	33696	32866	31331	29575	27852	22774
		862	9.01	54	39021	38132	37910	37688	37244	36800	36324	35546	34248	32623	30989	27270

CFM values shown in black are the most efficient selections. Values shown in gray are not recommended.

Performance certified is for Model SB for installation type A: free inlet, free outlet. Power rating (Bhp) does not include transmission losses. Performance ratings do not include the effects of appurtenances (accessories). *Speed (RPM) shown is nominal. Performance is based on actual speed of test. The sound ratings shown are loudness values in fan sones at 5 ft (1.5 m) in a hemispherical free field calculated per AMCA Standard 301. Values are for installation type A: free inlet hemispherical sone levels. *Sones shown apply to the highest cataloged CFM in black type at each fan RPM. For selections at other CFM and static pressure points, refer to CAPS, the Computer Aided Product Selection Program.

SB-54 Belt Drive

GREENHECK
Building Value in Air.

Model Number	Motor HP	Fan RPM	Max BHP	*Sones	CFM / Static Pressure in Inches WG											
					0.00	0.10	0.125	0.15	0.20	0.25	0.30	0.375	0.50	0.625	0.75	1.00
Level 1 Performance		Max RPM	L - 343	H - 377			Max Motor Frame Size - 145T					TS = RPM x 13.135				
SB-1L54-7	3/4	224	0.51	10.7	19676	12031										
		257	0.77	12.0	22575	17498	14789									
		272	0.92	12.7	23892	19346	17418	14251								
SB-1H54-7	3/4	244	0.49	10.6	18660	13392										
		281	0.75	12.2	21490	17541	16040									
		299	0.91	13.4	22867	19233	18136	16425								
SB-1L54-10	1	283	1.03	13.3	24859	20604	19008	16462								
		300	1.21	14.1	26352	22515	21155	19430								
SB-1H54-10	1	310	1.01	14.0	23708	20252	19215	17828								
		329	1.21	15.6	25161	21986	21010	20033								
SB-1L54-15	1½	325	1.56	16.5	28548	25088	24008	22726	18692							
		343	1.83	17.3	30129	26851	26014	24825	21850	16537						
SB-1H54-15	1½	355	1.52	17.4	27149	24310	23414	22509	20237							
		377	1.82	19.0	28832	26243	25408	24557	22802	19924						
Level 2 Performance		Max RPM	L - 508	H - 562			Max Motor Frame Size - 184T					TS = RPM x 13.135				
SB-2L54-15	1½	325	1.56	16.5	28548	25088	24008	22726	18692							
		343	1.81	17.3	30129	26851	26014	24825	21850							
SB-2H54-15	1½	355	1.52	17.4	27149	24310	23414	22509	20237							
		377	1.82	19.0	28832	26243	25408	24557	22802	19924						
SB-2L54-20	2	356	2.00	18.0	31271	28113	27322	26297	23790							
		380	2.46	19.6	33379	30420	29680	28940	26821	23826						
SB-2H54-20	2	390	2.01	20	29826	27374	26567	25750	24103	21767						
		414	2.41	22	31662	29444	28684	27924	26374	24628	21971					
SB-2L54-30	3	408	3.07	22	35839	33083	32394	31704	30019	27876	24657					
		433	3.61	26	38035	35439	34789	34139	32810	30926	28749					
SB-2H54-30	3	446	3.01	26	34109	32145	31468	30762	29338	27897	26104					
		474	3.61	30	36250	34402	33873	33209	31882	30526	29170	26145				
SB-2L54-50	5	478	4.87	35	41988	39636	39048	38459	37283	36006	34299	31347				
		508	5.97	44	44623	42410	41857	41303	40196	39088	37699	35194	28363			
SB-2H54-50	5	528	4.99	35	40380	38721	38307	37854	36662	35469	34252	32427	27435			
		562	6.03	40	42980	41422	41032	40643	39618	38498	37370	35655	32079			
Level 3 Performance		Max RPM	L - 619	H - 779			Max Motor Frame Size - 254T					TS = RPM x 13.135				
SB-3L54-30	3	339	1.97	20	29862	26277	25025	23452	19663							
		390	3.01	25	34354	31312	30531	29462	26898	24533	21251					
		415	3.61	27	36557	33708	32974	32162	30005	27535	24061					
SB-3H54-30	3	430	2.03	27	27612	25569	25157	24640	23580	22036	20032					
		491	3.00	33	31529	29634	29274	28913	28053	27125	25868	23501				
		526	3.62	38	33776	31946	31609	31272	30565	29698	28831	26933				
SB-3L54-50	5	463	5.01	40	40785	38252	37593	36935	35395	33426	31153	26792				
		492	6.02	44	43339	40968	40348	39728	38489	36778	34740	31783	26116			
SB-3H54-50	5	584	5.01	48	37501	35765	35447	35144	34537	33881	33101	31897	28836			
		618	6.02	52	39684	38044	37683	37396	36823	36250	35558	34451	32025	28547		
SB-3L54-75	7½	530	7.51	46	46687	44501	43926	43351	42200	40903	39302	36323	30423			
		563	9.03	49	49594	47550	47008	46467	45384	44301	42910	40440	36084	30683		
SB-3H54-75	7½	666	7.38	57	42766	41244	40864	40558	40026	39494	38962	37956	36129	33526		
		710	9.02	63	45591	44164	43807	43450	42943	42444	41945	41121	39515	37449	34796	
SB-3L54-100	10	584	10.04	51	51443	49482	48960	48438	47394	46350	45173	42994	38597	33058		
		619	12.00	56	54526	52685	52198	51706	50721	49736	48751	46840	42826	39077	33870	
SB-3H54-100	10	738	10.01	68	47389	46016	45673	45329	44791	44311	43831	43111	41571	39835	37550	
		779	12.00	75	50022	48721	48396	48070	47487	47032	46578	45895	44548	43085	41129	35732

CFM values shown in black are the most efficient selections. Values shown in gray are not recommended.

Performance certified is for Model SB for installation type A: free inlet, free outlet. Power rating (Bhp) does not include transmission losses. Performance ratings do not include the effects of appurtenances (accessories). *Speed (RPM) shown is nominal. Performance is based on actual speed of test. The sound ratings shown are loudness values in fan sones at 5 ft (1.5 m) in a hemispherical free field calculated per AMCA Standard 301. Values are for installation type A: free inlet hemispherical sone levels. *Sones shown apply to the highest cataloged CFM in black type at each fan RPM. For selections at other CFM and static pressure points,refer to CAPS, the Computer Aided Product Selection Program.

SB-60 Belt Drive

GREENHECK
Building Value in Air.

Model Number	Motor HP	Fan RPM	Max BHP	*Sones	CFM / Static Pressure in Inches WG											
					0.00	0.10	0.125	0.15	0.20	0.25	0.30	0.375	0.50	0.625	0.75	1.00
Level 2 Performance		Max RPM	L - 399		H - 521		Max Motor Frame Size - 215T					TS = RPM x 15.691				
SB-2L60-15	1 1/2	219	0.99	11.8	29223											
		252	1.52	14.9	33627	26297										
		267	1.80	16.7	35628	28888	26731									
SB-2H60-15	1 1/2	285	0.98	19.3	25029	21665	20507	19031								
		328	1.50	23	28805	25931	25163	24307	21827							
		348	1.81	25	30561	27858	27152	26428	24458	21479						
SB-2L60-20	2	277	2.01	17.9	36963	30532	28569									
		294	2.41	20	39231	33280	31524	29592								
SB-2H60-20	2	361	2.01	26	31703	29065	28432	27734	25998	23625						
		383	2.41	28	33635	31095	30577	29920	28558	26588	23870					
SB-2L60-30	3	317	3.02	23	42300	36880	35324	33661								
		337	3.63	25	44969	39902	38533	37026	33664							
SB-2H60-30	3	415	3.01	31	36445	34024	33548	33054	31839	30400	28519					
		438	3.60	34	38465	36115	35664	35214	34128	32978	31354	28368				
SB-2L60-50	5	375	5.00	28	50040	45536	44345	43137	40410	37274						
		399	6.02	31	53242	49009	47929	46800	44361	41676	38401					
SB-2H60-50	5	489	5.00	42	42944	40718	40314	39911	39104	38087	37057	34972	29773			
		521	6.01	47	45754	43590	43208	42830	42072	41233	40266	38708	34835			
Level 3 Performance		Max RPM	L - 503		H - 659		Max Motor Frame Size - 256T					TS = RPM x 15.691				
SB-3L60-50	5	317	3.02	23	42300	36880	35324	33661								
		375	5.00	28	50040	45536	44345	43137	40410	37274						
		399	6.02	31	53242	49009	47929	46800	44361	41676	38401					
SB-3H60-50	5	415	3.01	31	36445	34024	33548	33054	31839	30400	28519					
		489	5.00	42	42944	40718	40314	39911	39104	38087	37057	34972	29773			
		521	6.01	47	45754	43590	43208	42830	42072	41233	40266	38708	34835			
SB-3L60-75	7 1/2	430	7.54	41	57379	53451	52469	51451	49333	46970	44412					
		457	9.05	56	60982	57286	56362	55438	53476	51359	49101	45184				
SB-3H60-75	7 1/2	559	7.51	51	49091	47075	46626	46274	45568	44862	44021	42669	39714	35627		
		595	9.00	56	52253	50358	49884	49518	48855	48192	47529	46261	43933	40629	35715	
SB-3L60-100	1 0	473	10.04	67	63117	59546	58653	57760	55891	53922	51775	48286				
		503	12.10	72	67120	63762	62923	62083	60374	58582	56644	53530				
SB-3H60-100	1 0	615	10.00	60	54009	52176	51718	51314	50673	50031	49389	48236	46188	43214	39510	
		659	12.00	70	57873	56163	55735	55307	54653	54054	53455	52537	50625	48395	45470	

CFM values shown in black are the most efficient selections. Values shown in gray are not recommended.

SB- 72 Belt Drive

Level 3 Performance		Max RPM	L - 492		H - 559		Max Motor Frame Size - 256T					TS = RPM x 18.802				
SB-3L72-30	3	236	2.00	17.5	41661	36581	34402	32305								
		271	3.02	20	47840	43440	42315	40635	36937							
		288	3.61	22	50841	46713	45654	44576	40999							
SB-3H72-30	3	266	2.00	24	40185	35934	34790	33352	29513							
		306	3.01	28	46228	42491	41629	40634	38280	35026						
		324	3.61	30	48947	45342	44616	43707	41829	39122	35680					
SB-3L72-50	5	321	5.05	26	56667	52986	52036	51086	48805	45604	42580					
		341	6.01	29	60197	56743	55852	54958	53170	50373	47427					
SB-3H72-50	5	362	5.04	35	54688	51305	50655	50006	48405	46723	44302	39813				
		387	6.03	39	58465	55195	54588	53980	52646	51074	49325	45737				
SB-3L72-75	7 1/2	367	7.52	33	64787	61577	60768	59938	58276	56442	53627	49588				
		391	9.03	38	69024	66011	65258	64489	62930	61371	59275	55346				
SB-3H72-75	7 1/2	414	7.52	43	62543	59374	58806	58238	57102	55698	54228	51410	44663			
		442	9.01	50	66773	63726	63155	62623	61559	60428	59051	56986	51688			
SB-3L72-100	1 0	405	10.01	41	71495	68587	67859	67128	65622	64117	62514	58687				
		430	12.10	45	75909	73169	72484	71799	70395	68977	67559	64603	58769			
SB-3H72-100	1 0	456	10.02	51	68888	65934	65321	64806	63775	62743	61437	59435	54874	47671		
		486	12.00	57	73421	70649	69956	69464	68496	67529	66500	64622	60962	55889		
SB-3L72-150	1 5	463	15.10	52	81734	79190	78554	77918	76637	75320	74003	72027	66649	61379		
		492	18.00	57	86854	84459	83861	83262	82065	80838	79599	77740	73537	68410		
SB-3H72-150	1 5	522	15.00	64	78859	76279	75633	75025	74124	73223	72322	70752	67837	63842	58785	
		559	18.10	75	84449	82039	81436	80834	79872	79030	78189	76927	74244	71276	67313	

CFM values shown in black are the most efficient selections. Values shown in gray are not recommended.

Performance certified is for Model SB for installation type A: free inlet, free outlet. Power rating (Bhp) does not include transmission losses. Performance ratings do not include the effects of appurtenances (accessories). *Speed (RPM) shown is nominal. Performance is based on actual speed of test. The sound ratings shown are loudness values in fan sones at 5 ft (1.5 m) in a hemispherical free field calculated per AMCA Standard 301. Values are for installation type A: free inlet hemispherical sone levels. *Sones shown apply to the highest cataloged CFM in black type at each fan RPM. For selections at other CFM and static pressure points, refer to CAPS, the Computer Aided Product Selection Program.

SBC-24-30 Belt Drive
Cast Aluminum

GREENHECK
Building Value in Air.

Model Number	Motor HP	Fan RPM	Max BHP	*Sones	CFM / Static Pressure in Inches WG											
					0.00	0.10	0.125	0.15	0.20	0.25	0.30	0.375	0.50	0.625	0.75	1.00
24 Performance	Max RPM L - 1194 H - 1396				Max Motor Frame Size - 145T							TS = RPM x 6.283				
SBC-3L24-3	1/3	707	0.25	11.7	4871	4203	3934	3666	3046							
		777	0.33	13.3	5353	4759	4578	4333	3826	3181						
		828	0.40	14.6	5704	5156	5000	4804	4346	3836						
SBC-3H24-3	1/3	829	0.25	13.1	4726	4160	4012	3859	3528	3131	2459	998				
		911	0.33	15.2	5193	4686	4549	4414	4128	3824	3457	1842	771			
		968	0.40	16.7	5518	5046	4917	4788	4531	4251	3945	3338	1239			
SBC-3L24-5	1/2	892	0.50	16.3	6145	5646	5503	5358	4955	4525	4034					
		948	0.60	18.0	6531	6070	5936	5800	5474	5073	4647	3825				
SBC-3H24-5	1/2	1043	0.50	18.7	5946	5515	5394	5274	5038	4790	4529	4086	1820	1066		
		1108	0.60	20	6317	5917	5803	5690	5466	5244	5001	4621	3734	1589	878	
SBC-3L24-7	3/4	1021	0.75	20	7034	6617	6493	6368	6116	5761	5390	4774				
		1085	0.90	21	7475	7092	6975	6858	6622	6349	5999	5463				
SBC-3H24-7	3/4	1194	0.75	22	6807	6438	6339	6233	6023	5817	5609	5268	4627	3509	1584	
		1268	0.90	23	7229	6881	6794	6696	6498	6301	6107	5800	5243	4536	2159	917
SBC-3L24-10	1	1124	1.00	22	7743	7380	7267	7154	6927	6698	6362	5856	4888			
		1194	1.20	24	8225	7892	7788	7682	7469	7253	7004	6527	5677			
SBC-3H24-10	1	1314	1.00	24	7491	7156	7072	6981	6790	6599	6412	6124	5603	4981	3940	1304
		1396	1.20	26	7958	7643	7564	7485	7306	7126	6948	6684	6208	5685	5051	1966
30 Performance	Max RPM L - 1262 H - 1616				Max Motor Frame Size - 184T							TS = RPM x 7.854				
SBC-3L30-5	1/2	569	0.33	13.0	7847	6270	5795	5113								
		654	0.50	15.2	9019	7723	7321	6931	5825							
		695	0.60	16.6	9585	8388	8025	7647	6798							
SBC-3H30-5	1/2	728	0.33	14.5	7043	6131	5893	5647	5111	4342	3084					
		837	0.50	17.6	8097	7305	7109	6902	6478	6018	5432	4155				
		890	0.60	19.1	8610	7863	7681	7492	7098	6696	6238	5288				
SBC-3L30-7	3/4	749	0.75	18.5	10329	9246	8927	8580	7894	6971						
		795	0.90	20	10964	9966	9665	9359	8700	7988	6979					
SBC-3H30-7	3/4	958	0.75	21	9268	8571	8402	8233	7875	7504	7125	6434	4568			
		1018	0.90	23	9848	9190	9031	8872	8544	8201	7850	7277	5927			
SBC-3L30-10	1	824	1.00	21	11364	10408	10126	9836	9204	8587	7726					
		875	1.20	23	12067	11169	10927	10653	10081	9486	8839	7440				
SBC-3H30-10	1	1055	1.00	24	10206	9569	9416	9263	8951	8623	8286	7759	6591	4668		
		1121	1.20	26	10845	10242	10098	9954	9665	9362	9051	8572	7667	6305		
SBC-3L30-15	1½	943	1.50	25	13005	12173	11962	11727	11220	10666	10120	9119				
		1002	1.80	28	13818	13038	12839	12640	12168	11672	11148	10388				
SBC-3H30-15	1½	1207	1.50	30	11677	11117	10980	10846	10578	10308	10022	9584	8814	7822	6497	
		1283	1.80	34	12412	11886	11754	11627	11375	11122	10863	10458	9762	8982	7921	
SBC-3L30-20	2	1038	2.00	29	14315	13562	13370	13178	12740	12277	11771	11028	9312			
		1103	2.40	32	15211	14504	14324	14143	13762	13329	12877	12162	10837			
SBC-3H30-20	2	1329	2.00	35	12857	12349	12222	12097	11853	11610	11366	10976	10309	9588	8680	5623
		1412	2.40	39	13660	13182	13062	12943	12712	12483	12254	11898	11279	10645	9926	7863
SBC-3L30-30	3	1188	3.00	36	16383	15727	15562	15394	15059	14678	14275	13631	12547	11117		
		1262	3.60	40	17404	16786	16632	16475	16159	15835	15456	14881	13842	12738	11164	
SBC-3H30-30	3	1521	3.00	43	14715	14271	14160	14049	13829	13617	13404	13085	12521	11939	11347	9800
		1616	3.60	47	15634	15216	15111	15007	14798	14596	14396	14096	13579	13041	12487	11270

CFM values shown in black are the most efficient selections. Values shown in gray are not recommended.

Performance certified is for Model SBC for installation type A: free inlet, free outlet. Power rating (Bhp) does not include transmission losses. Performance ratings do not include the effects of appurtenances (accessories). *Speed (RPM) shown is nominal. Performance is based on actual speed of test. The sound ratings shown are loudness values in fan sones at 5 ft (1.5 m) in a hemispherical free field calculated per AMCA Standard 301. Values are for installation type A: free inlet hemispherical sone levels. *Sones shown apply to the highest cataloged CFM in black type at each fan RPM. For selections at other CFM and static pressure points, refer to CAPS, the Computer Aided Product Selection Program.

SBC-36-42 Belt Drive

Cast Aluminum

GREENHECK
Building Value in Air.

Model Number	Motor HP	Fan RPM	Max BHP	*Sones	CFM / Static Pressure in Inches WG											
					0.00	0.10	0.125	0.15	0.20	0.25	0.30	0.375	0.50	0.625	0.75	1.00
36 Performance	Max RPM L - 1183 H - 1480						Max Motor Frame Size - 184T					TS = RPM x 9.424				
SBC-3L36-7	3/4	516	0.50	16.8	11939	9557	8829									
		593	0.75	19.4	13721	11814	11168	10528								
		630	0.90	21	14577	12834	12261	11645	10267							
SBC-3H36-7	3/4	644	0.50	16.4	11014	9546	9133	8714	7772	6388						
		740	0.75	19.3	12655	11375	11058	10720	9987	9269	8128	5237				
		786	0.90	21	13442	12239	11937	11639	10951	10296	9439	7708				
SBC-3L36-10	1	652	1.00	22	15086	13432	12900	12305	11146							
		693	1.20	24	16034	14528	14037	13515	12409							
SBC-3H36-10	1	814	1.00	21	13921	12764	12467	12179	11539	10887	10251	8712				
		865	1.20	24	14793	13713	13424	13152	12595	11952	11363	10148	6816			
SBC-3L36-15	1½	747	1.50	26	17284	15904	15505	15043	14034	13022						
		793	1.80	28	18348	17064	16709	16301	15395	14424	13478					
SBC-3H36-15	1½	932	1.50	27	15939	14947	14679	14413	13910	13358	12764	11955	9834			
		991	1.81	29	16948	16024	15773	15521	15038	14565	14009	13209	11486	8916		
SBC-3L36-20	2	822	2.01	29	19019	17789	17447	17085	16238	15296	14379					
		873	2.41	32	20199	19058	18736	18414	17658	16812	15930	14506				
SBC-3H36-20	2	1026	2.00	31	17547	16654	16418	16174	15701	15243	14737	13939	12515	10428		
		1090	2.41	35	18641	17801	17589	17360	16902	16471	16041	15285	14101	12341	9976	
SBC-3L36-30	3	939	3.00	35	21726	20687	20387	20088	19454	18719	17906	16689				
		998	3.61	39	23092	22127	21851	21569	21006	20343	19635	18470	16315			
SBC-3H36-30	3	1174	3.00	39	20078	19297	19102	18902	18477	18060	17661	17032	15873	14769	12962	
		1248	3.60	43	21343	20609	20426	20242	19850	19449	19067	18503	17426	16390	15077	10981
SBC-3L36-50	5	1113	5.01	47	25752	24888	24672	24424	23919	23413	22823	21871	20143	18120		
		1183	6.01	51	27372	26559	26355	26145	25670	25194	24713	23837	22246	20647		
SBC-3H36-50	5	1392	5.00	51	23806	23148	22983	22819	22490	22132	21773	21255	20412	19413	18480	15976
		1480	6.01	58	25311	24692	24537	24382	24073	23751	23413	22909	22117	21253	20313	18538
42 Performance	Max RPM L - 916 H - 1259						Max Motor Frame Size - 184T					TS = RPM x 10.995				
SBC-3L42-10	1	459	0.76	15.0	15668	12712	11573									
		504	1.00	17.1	17205	14534	13822	12742								
		536	1.20	18.1	18297	15764	15173	14440								
SBC-3H42-10	1	630	0.75	23	14710	13176	12736	12261	11152	9826	8273					
		692	1.00	25	16158	14789	14403	14003	13096	12041	10833	8546				
		736	1.20	27	17185	15919	15558	15190	14411	13492	12420	10692				
SBC-3L42-15	1½	577	1.50	19.7	19696	17316	16771	16196	14444							
		613	1.80	21	20925	18692	18147	17635	16364	14566						
SBC-3H42-15	1½	793	1.50	29	18516	17367	17032	16698	16004	15223	14370	12822	9458			
		842	1.80	31	19660	18600	18285	17970	17329	16671	15872	14556	11992			
SBC-3L42-20	2	635	2.00	23	21676	19551	18980	18485	17376	15648						
		675	2.40	25	23042	21097	20492	20012	19068	17750	16130					
SBC-3H42-20	2	872	2.00	33	20361	19351	19047	18743	18130	17495	16775	15590	13189	9576		
		927	2.40	36	21645	20721	20435	20149	19576	18987	18390	17308	15214	12754		
SBC-3L42-30	3	727	3.00	29	24817	23036	22520	21969	21104	20153	18783					
		773	3.61	31	26387	24729	24278	23762	22864	22051	21080	18935				
SBC-3H42-30	3	998	3.00	40	23303	22459	22211	21945	21414	20882	20328	19443	17697	15606	13168	
		1061	3.61	44	24774	23980	23776	23526	23026	22526	22019	21236	19699	17881	15890	
SBC-3L42-50	5	862	5.01	37	29425	27971	27566	27161	26242	25478	24749	23472	20356			
		916	6.01	42	31269	29920	29539	29158	28347	27517	26831	25762	23038			
SBC-3H42-50	5	1184	5.01	51	27645	26934	26756	26579	26135	25687	25239	24559	23384	21956	20349	16653
		1259	6.01	57	29397	28728	28561	28393	28011	27590	27168	26536	25446	24224	22881	19615

CFM values shown in black are the most efficient selections. Values shown in gray are not recommended.

Performance certified is for Model SBC for installation type A: free inlet, free outlet. Power rating (Bhp) does not include transmission losses. Performance ratings do not include the effects of appurtenances (accessories). *Speed (RPM) shown is nominal. Performance is based on actual speed of test. The sound ratings shown are loudness values in fan sones at 5 ft (1.5 m) in a hemispherical free field calculated per AMCA Standard 301. Values are for installation type A: free inlet hemispherical sone levels.*Sones shown apply to the highest cataloged CFM in black type at each fan RPM. For selections at other CFM and static pressure points, refer to CAPS, the Computer Aided Product Selection Program..

SBC-48-54 Belt Drive

Cast Aluminum

GREENHECK
Building Value in Air.

Model Number	Motor HP	Fan RPM	Max BHP	*Sones	CFM / Static Pressure in Inches WG											
					0.00	0.10	0.125	0.15	0.20	0.25	0.30	0.375	0.50	0.625	0.75	1.00
48 Performance		Max RPM	L - 908	H - 1182			Max Motor Frame Size - 215T					TS = RPM x 12.566				
SBC-3L48-15	1½	435	0.99	18.5	21897	17413	15801									
		500	1.51	23	25169	21295	20354	19165								
		531	1.80	24	26730	23117	22183	21212								
SBC-3H48-15	1½	566	0.99	23	21010	18533	17717	17010	15233	13144	9229					
		650	1.50	28	24128	21973	21464	20750	19481	17983	16242	12200				
		691	1.80	31	25650	23608	23130	22600	21313	20083	18535	15959				
SBC-3L48-20	2	550	2.00	25	27686	24227	23288	22434								
		585	2.41	27	29448	26249	25335	24494	22640							
SBC-3H48-20	2	716	2.01	33	26578	24598	24136	23675	22413	21279	19918	17513				
		761	2.41	35	28249	26368	25935	25501	24434	23316	22195	20084	15370			
SBC-3L48-30	3	630	3.01	30	31713	28809	27962	27113	25587	23623						
		669	3.61	32	33676	30972	30203	29404	27904	26301						
SBC-3H48-30	3	819	3.00	39	30402	28632	28231	27827	27020	25867	24889	23274	19744	13540		
		871	3.61	43	32332	30648	30270	29892	29133	28230	27191	25779	22761	19268		
SBC-3L48-50	5	746	5.00	38	37552	35186	34519	33835	32401	31082	29675					
		793	6.01	41	39918	37729	37102	36474	35144	33810	32626	30464				
SBC-3H48-50	5	971	5.00	53	36044	34496	34157	33818	33140	32459	31682	30277	28102	25291	22178	
		1032	6.00	59	38308	36841	36509	36191	35553	34913	34272	33002	30995	28669	25923	16703
SBC-3L48-75	7½	854	7.50	45	42989	41003	40421	39838	38648	37395	36190	34476				
		908	9.02	50	45707	43860	43334	42786	41690	40528	39350	37736	34664			
SBC-3H48-75	7½	1112	7.51	67	41278	39917	39577	39282	38690	38098	37504	36601	34556	32687	30384	25026
		1182	9.01	75	43876	42596	42275	41971	41415	40859	40300	39461	37668	35918	34068	29382
54 Performance		Max RPM	L - 727	H - 856			Max Motor Frame Size - 254T					TS = RPM x 14.135				
SBC-3L54-20	2	364	1.51	18.0	25482	21713	20664	19377								
		400	2.01	20	28002	24618	23706	22752	19950							
		425	2.41	22	29752	26685	25741	24882	22822							
SBC-3H54-20	2	429	1.51	21	25150	22604	21870	21035	19310	17043	13521					
		471	2.00	23	27612	25349	24701	24032	22511	20907	18781					
		501	2.41	26	29370	27282	26674	26066	24696	23254	21708	18049				
SBC-3L54-30	3	458	3.01	25	32062	29480	28382	27585	25914	23719						
		487	3.62	28	34092	31897	30843	29919	28420	26637	24050					
SBC-3H54-30	3	539	3.00	29	31598	29657	29143	28577	27407	26078	24712	22298				
		573	3.61	31	33591	31765	31309	30796	29731	28536	27286	25299	20153			
SBC-3L54-50	5	543	5.02	33	38013	36203	35539	34594	32996	31652	30072	26691				
		577	6.02	38	40393	38690	38264	37449	35716	34451	33186	30778				
SBC-3H54-50	5	639	5.00	37	37461	35823	35414	35004	34086	33131	32068	30386	27398	22327		
		680	6.02	41	39864	38325	37941	37556	36748	35851	34954	33382	30664	27125	21725	
SBC-3L54-75	7½	621	7.51	44	43473	41891	41495	41090	39437	38008	36833	34916	30021			
		660	9.01	49	46203	44715	44342	43970	42720	41165	40006	38347	34940			
SBC-3H54-75	7½	732	7.52	47	42913	41483	41126	40768	40054	39254	38421	37100	34654	32044	28344	
		778	9.03	53	45609	44264	43928	43592	42919	42229	41445	40269	38025	35671	33163	23604
SBC-3L54-100	10	684	10.03	53	47883	46447	46088	45729	44718	43217	41935	40334	37224	30947		
		727	12.00	61	50894	49542	49204	48866	48191	46850	45438	43846	41235	37872		
SBC-3H54-100	10	805	10.02	55	47192	45892	45567	45242	44592	43942	43205	42068	39973	37748	35353	27829
		856	12.03	61	50182	48959	48654	48348	47737	47126	46501	45432	43599	41507	39367	33873

CFM values shown in black are the most efficient selections. Values shown in gray are not recommended.

Performance certified is for Model SBC for installation type A: free inlet, free outlet. Power rating (Bhp) does not include transmission losses. Performance ratings do not include the effects of appurtenances (accessories). *Speed (RPM) shown is nominal. Performance is based on actual speed of test. The sound ratings shown are loudness values in fan sones at 5 ft (1.5 m) in a hemispherical free field calculated per AMCA Standard 301. Values are for installation type A: free inlet hemispherical sone levels.**Sones shown apply to the highest cataloged CFM in black type at each fan RPM. For selections at other CFM and static pressure points,refer to CAPS, the Computer Aided Product Selection Program.

SBC-60-72 Belt Drive

Cast Aluminum

GREENHECK
Building Value in Air.

Model Number	Motor HP	Fan RPM	Max BHP	*Sones	CFM / Static Pressure in Inches WG											
					0.00	0.10	0.125	0.15	0.20	0.25	0.30	0.375	0.50	0.625	0.75	1.00
60 Performance		Max RPM	L - 620		H - 775		Max Motor Frame Size - 254T					TS = RPM x 15.691				
SBC-3L60-20	2	310	1.51	16.6	30908	25347	22293	19082								
		341	2.01	19.4	33999	29312	27467	24664								
		363	2.42	22	36192	31785	30693	28420	23150							
SBC-3H60-20	2	389	1.52	21	29943	25920	24798	23553	20680	15870						
		427	2.01	24	32868	29286	28268	27248	24967	22058	17552					
		453	2.40	27	34870	31476	30591	29632	27574	25189	22147					
SBC-3L60-30	3	390	3.00	25	38884	34776	33760	32638	27839							
		415	3.62	28	41377	37510	36555	35601	32117	27497						
SBC-3H60-30	3	488	3.00	30	37564	34371	33650	32779	30979	28994	26657	21643				
		519	3.61	32	39950	36909	36232	35520	33845	32059	30140	26478				
SBC-3L60-50	5	463	5.02	32	46162	42688	41830	40975	39264	35742	31582					
		492	6.02	36	49054	45784	44971	44165	42555	40364	36566	30638				
SBC-3H60-50	5	579	5.01	38	44569	41770	41163	40556	39227	37725	36138	33558	27786			
		615	6.01	42	47340	44661	44089	43517	42374	40977	39563	37234	32691	25081		
SBC-3L60-75	7½	530	7.53	41	52842	49807	49049	48296	46801	45306	42821	37434				
		563	9.03	46	56133	53276	52561	51847	50438	49031	47623	43088	34085			
SBC-3H60-75	7½	663	7.53	48	51034	48490	47960	47430	46369	45239	43927	41918	38131	33224		
		704	9.01	54	54190	51775	51244	50745	49746	48747	47588	45736	42385	38434	33206	
SBC-3L60-100	10	583	10.02	50	58127	55368	54678	53988	52623	51264	49905	46376	38202			
		620	12.10	56	61816	59221	58573	57924	56632	55354	54076	52119	44587			
SBC-3H60-100	10	729	10.01	57	56115	53782	53238	52756	51791	50827	49796	48006	44851	41263	36767	
		775	12.02	63	59656	57462	56913	56439	55532	54624	53717	52131	49309	46183	42537	31181
72 Performance		Max RPM	L - 578		H - 795		Max Motor Frame Size - 256T					TS = RPM x 18.802				
SBC-3L72-30	3	278	2.00	19.3	41857	28605	23878	19635								
		319	3.03	24	48030	37936	33936	29771								
		338	3.60	27	50891	41519	38276	34437	26696							
SBC-3H72-30	3	381	1.99	28	40824	35815	34566	33074	29443	24659						
		438	3.02	34	46931	42584	41485	40398	37929	34824	31069	23783				
		465	3.61	37	49824	45755	44693	43669	41527	39012	35800	29847				
SBC-3L72-50	5	378	5.04	33	56913	48882	46438	43660	36768	29874						
		401	6.01	37	60376	53221	50620	48457	42331	35746	29279					
SBC-3H72-50	5	519	5.02	46	55610	52015	51052	50092	48258	46311	44091	39883	30522			
		551	6.00	52	59039	55683	54777	53870	52112	50384	48405	44927	37456			
SBC-3L72-75	7½	432	7.52	41	65043	58947	56432	54138	49416	43402	37327					
		459	9.02	45	69109	63324	61492	59114	55204	49816	44056	35555				
SBC-3H72-75	7½	594	7.56	58	63646	60574	59733	58892	57219	55616	54013	51160	45205	37157		
		631	9.01	65	67611	64754	63963	63171	61587	60049	58540	56106	51062	44626	36346	
SBC-3L72-100	10	476	10.06	48	71668	66060	64634	62341	58348	53680	48216	39954				
		505	12.01	54	76035	70697	69477	67767	63628	60117	55073	47224				
SBC-3H72-100	10	653	10.00	69	69968	67229	66464	65699	64169	62660	61202	59001	54465	48597	41207	
		694	12.00	77	74361	71806	71103	70384	68944	67504	66111	64053	60168	55291	49391	
SBC-3L72-150	15	544	15.01	63	81907	76884	75751	74618	70920	67400	63833	56750	44689			
		578	18.00	72	87026	82239	81173	80107	77299	73547	70545	64621	53266	42050		
SBC-3H72-150	15	748	15.01	90	80147	77777	77176	76508	75172	73836	72500	70580	67340	63488	58637	46264
		795	18.04	104	85183	82953	82395	81804	80547	79290	78033	76179	73186	69826	65974	55871

CFM values shown in black are the most efficient selections. Values shown in gray are not recommended.

Performance certified is for Model SBC for installation type A: free inlet, free outlet. Power rating (Bhp) does not include transmission losses. Performance ratings do not include the effects of appurtenances (accessories). *Speed (RPM) shown is nominal. Performance is based on actual speed of test. The sound ratings shown are loudness values in fan sones at 5 ft (1.5 m) in a hemispherical free field calculated per AMCA Standard 301. Values are for installation type A: free inlet hemispherical sone levels. *Sones shown apply to the highest cataloged CFM in black type at each fan RPM. For selections at other CFM and static pressure points, refer to CAPS, the Computer Aided Product Selection Program.

SBCR-24-72 Belt Drive

Reversible - Cast Aluminum

GREENHECK
Building Value in Air.

Model Number	Motor HP	Fan RPM	Max BHP	Sones	CFM / Static Pressure in Inches WG											
					0.00	0.05	0.10	0.125	0.15	0.20	0.25	0.30	0.375	0.50	0.625	0.75
24 Performance			Max RPM = 1623				Max Motor Frame Size = 145T						TS = RPM x 6.283			
SBCR-24-4	1/4	841	0.24	14.2	4792	4447	4061	3827	3413							
SBCR-24-4		893	0.28	15.0	5088	4766	4411	4216	3961							
SBCR-24-3	1/3	983	0.39	16.6	5601	5312	5001	4829	4651	4127						
SBCR-24-5	1/2	1126	0.59	19.4	6416	6165	5898	5763	5618	5308	4892	3875				
SBCR-24-7	3/4	1288	0.89	23	7339	7119	6893	6774	6656	6406	6135	5807	4756			
SBCR-24-10	1	1418	1.13	27	8080	7880	7680	7572	7465	7249	7015	6769	6313			
SBCR-24-15	1½	1623	1.77	35	9248	9074	8899	8812	8719	8531	8343	8148	7825	7171	5560	
30 Performance			Max RPM = 1506				Max Motor Frame Size = 184T						TS = RPM x 7.854			
SBCR-30-3	1/3	681	0.33	15.2	7420	6809	6030	5422								
SBCR-30-3		724	0.40	16.1	7889	7323	6622	6141	5545							
SBCR-30-5	1/2	829	0.60	18.8	9033	8553	8000	7667	7305	6276						
SBCR-30-7	3/4	949	0.90	23	10341	9921	9461	9217	8944	8304	7416					
SBCR-30-10	1	1045	1.20	27	11387	11006	10606	10385	10163	9650	9027	8221				
SBCR-30-15	1½	1196	1.78	32	13032	12699	12367	12185	11992	11604	11160	10680	9682			
SBCR-30-20	2	1316	2.39	37	14339	14037	13735	13584	13417	13065	12713	12303	11634	10018		
SBCR-30-30	3	1506	3.58	47	16410	16146	15881	15749	15617	15332	15025	14717	14215	13217	11824	
36 Performance			Max RPM = 1420				Max Motor Frame Size = 184T						TS = RPM x 9.424			
SBCR-36-5	1/2	620	0.49	16.7	10384	9580	8639	8115	7177							
SBCR-36-5		659	0.57	18.1	11037	10299	9409	8967	8440							
SBCR-36-7	3/4	755	0.85	22	12645	12019	11258	10874	10495	9613						
SBCR-36-10	1	830	1.13	26	13901	13332	12675	12316	11969	11265	10429					
SBCR-36-15	1½	951	1.79	30	15927	15431	14915	14602	14289	13677	13074	12361	10104			
SBCR-36-20	2	1046	2.26	35	17519	17067	16615	16359	16074	15505	14955	14407	13436			
SBCR-36-30	3	1198	3.40	44	20064	19670	19276	19079	18875	18378	17881	17396	16678	15294		
SBCR-36-50	5	1420	5.75	64	23782	23450	23117	22951	22784	22452	22043	21624	20995	19985	18886	17393
42 Performance			Max RPM = 1212				Max Motor Frame Size = 215T						TS = RPM x 10.995			
SBCR-42-5	1/2	530	0.50	17.2	12939	11634	9951	8604								
SBCR-42-5		563	0.60	18.6	13744	12530	11087	10017								
SBCR-42-7	3/4	644	0.90	23	15722	14691	13502	12884	12009							
SBCR-42-10	1	709	1.19	26	17308	16398	15341	14780	14218	12542						
SBCR-42-15	1½	812	1.80	32	19823	19030	18145	17684	17200	16213	14810	12626				
SBCR-42-20	2	893	2.46	37	21800	21079	20306	19887	19467	18585	17625	16359	12952			
SBCR-42-30	3	1023	3.59	48	24974	24344	23715	23354	22988	22255	21484	20706	19154			
SBCR-42-50	5	1212	5.96	67	29588	29056	28525	28259	27983	27365	26747	26122	25137	23184	20457	
48 Performance			Max RPM = 1166				Max Motor Frame Size = 215T						TS = RPM x 12.566			
SBCR-48-7	3/4	509	0.74	21	18042	16152	13446	11755								
SBCR-48-7		541	0.89	22	19176	17432	15068	13528	11927							
SBCR-48-10	1	596	1.23	26	21126	19601	17641	16402	15002	11943						
SBCR-48-15	1½	682	1.82	32	24174	22893	21309	20403	19418	16986	14441					
SBCR-48-20	2	750	2.42	37	26584	25419	24052	23305	22476	20552	18308	15990				
SBCR-48-30	3	859	3.58	45	30448	29431	28350	27706	27062	25649	24004	22085	19067			
SBCR-48-50	5	1018	5.97	62	36083	35225	34367	33934	33390	32303	31152	29930	27688	23511		
SBCR-48-75	7½	1166	9.20	83	41329	40580	39831	39457	39082	38184	37235	36278	34678	31491	27851	24113
54 Performance			Max RPM = 920				Max Motor Frame Size = 254T						TS = RPM x 14.135			
SBCR-54-15	1½	460	1.43	22	23743	22064	20143	18932	17613							
SBCR-54-15		489	1.78	24	25240	23683	21901	20962	19670	17383						
SBCR-54-20	2	538	2.38	27	27769	26390	24802	23961	23108	20807	18809					
SBCR-54-30	3	616	3.51	34	31795	30593	29260	28567	27848	26350	24285	22504				
SBCR-54-50	5	730	5.72	44	37679	36665	35622	35037	34451	33270	32012	30560	28033			
SBCR-54-75	7½	836	8.97	56	43151	42265	41379	40921	40409	39387	38365	37273	35559	31893	27638	
SBCR-54-100	10	920	11.90	69	47486	46681	45876	45474	45058	44129	43200	42271	40785	37864	34642	31024
60 Performance			Max RPM = 811				Max Motor Frame Size = 256T						TS = RPM x 15.691			
SBCR-60-20	2	446	1.97	25	29819	27584	25099	23718	22220	18365						
SBCR-60-20		474	2.39	27	31691	29584	27337	26059	24741	21272						
SBCR-60-30	3	543	3.56	34	36304	34455	32649	31594	30479	28197	25170	22150				
SBCR-60-50	5	644	5.98	44	43057	41498	39960	39199	38438	36561	34662	32715	28612			
SBCR-60-75	7½	737	8.96	56	49275	47912	46554	45889	45224	43877	42233	40590	38048	32357		
SBCR-60-100	10	811	11.90	69	54222	52984	51746	51134	50530	49321	48049	46555	44314	40222	34832	
72 Performance			Max RPM = 771				Max Motor Frame Size = 256T						TS = RPM x 18.802			
SBCR-72-20	2	371	2.00	26	38286	34158	29734	27617	25593							
SBCR-72-20		394	2.55	28	40659	36985	32714	30490	28675	24224						
SBCR-72-30	3	451	3.75	35	46542	43988	39709	37916	35972	32605	28738					
SBCR-72-50	5	535	6.32	47	55210	53296	49520	48026	46562	43398	40355	37687	31512			
SBCR-72-75	7½	612	9.23	59	63156	61483	59068	57107	55633	53073	50315	47451	43930	33516		
SBCR-72-100	10	674	12.00	71	69554	68035	66516	64788	63007	60429	58104	55580	51763	46218		
SBCR-72-150	15	771	19.00	94	79564	78236	76908	76244	74957	71843	69602	67569	64378	58868	54239	48179

Performance certified is for Model SBCR for installation type A: free inlet, free outlet. Power rating (Bhp) does not include transmission losses. Performance ratings do not include the effects of appurtenances (accessories). *Speed (RPM) shown is nominal. Performance is based on actual speed of test. The sound ratings shown are loudness values in fan sones at 5 ft (1.5 m) in a hemispherical free field calculated per AMCA Standard 301. Values are for installation type A: free inlet hemispherical sone levels.

Belt Drive Specifications

Belt Drive

Belt driven, axial type sidewall fans shall be provided as follows:

Propellers shall be constructed with fabricated steel, fabricated aluminum, or cast aluminum blades and hubs. Propellers shall be securely attached to fan shafts. All propellers shall be statically and dynamically balanced to AMCA standard 204-05.

Motors shall be permanently lubricated, heavy duty type, carefully matched to the fan load and furnished at the specified voltage, phase, and enclosure.

Ground and polished steel fan shafts shall be mounted in permanently lubricated, sealed ball bearing pillow blocks and coated with an anti-corrosive coating. Bearings shall be selected for a minimum (L_{10}) life in excess of 100,000 hours (L_{50} average life of 500,000 hours) at maximum cataloged operating speeds. Drives shall be sized for a minimum of 150 percent of driven horsepower. Pulleys shall be of the fully machined cast iron type, keyed and securely attached to wheel and motor shafts. Motor sheaves shall be adjustable for system balancing.

Drive frame and panel assemblies shall be galvanized steel or painted steel. Drive frames shall be formed channels and fan panels shall have prepunched mounting holes, formed flanges, and a deep formed inlet venturi. Drive frames and panels shall be bolted construction or welded construction (level 3 fans only).

The axial exhaust or supply fans shall bear the AMCA Certified Ratings Seals for Sound and Air Performance.

Fans shall be Model SB and SBC as manufactured by Greenheck Fan Corporation, Schofield, Wisconsin, U.S.A.

Reversible Belt Drive

Belt driven, axial type sidewall fans shall be provided as follows:

Propellers shall be constructed with cast aluminum blades and hubs. Propellers shall be securely attached to fan shafts. All propellers shall be statically and dynamically balanced to AMCA standard 204-05.

Motors shall be permanently lubricated, heavy duty type, carefully matched to the fan load and furnished at the specified voltage, phase, and enclosure.

Ground and polished steel fan shafts shall be mounted in permanently lubricated, sealed ball bearing pillow blocks, and coated with an anti-corrosive coating. Bearings shall be selected for a minimum (L_{10}) life in excess of 100,000 hours (L_{50} average life of 500,000) at maximum cataloged operating speeds. Drives shall be sized for a minimum of 150 percent of driven horsepower. Pulleys shall be of the fully machined cast iron type, keyed and securely attached to wheel and motor shafts. Motor sheaves shall be adjustable for system balancing.

Drive frame and panel assemblies shall be galvanized steel or painted steel. Drive frames shall be formed channels and fan panels shall have prepunched mounting holes, formed flanges, and a deep formed double inlet venturi. Drive frames and panels shall be bolted construction or welded construction.

The axial exhaust or supply fans shall be tested in accordance AMCA Standard 301 in Sound and Air Performance.

Fans shall be Model SBCR as manufactured by Greenheck Fan Corporation, Schofield, Wisconsin, U.S.A.

Direct Drive Specifications

Direct Drive

Direct drive, axial type sidewall fans shall be provided as follows:

Propellers shall be constructed with fabricated steel, fabricated aluminum, or cast aluminum blades and hubs. A standard square key and set screw or tapered bushing shall lock the propeller to the motor shaft. All propellers shall be statically and dynamically balanced to AMCA Standard 204-05.

Motors shall be permanently lubricated, heavy duty type, carefully matched to the fan load and furnished at the specified RPM, voltage, phase, and enclosure.

Motor drive frame assemblies and fan panels shall be galvanized steel or painted steel. Drive frame assemblies shall be welded wire or formed channels and fan panels shall have prepunched mounting holes, formed flanges, and a deep formed inlet venturi. Drive frames and panels shall be bolted construction or welded construction (level 2 & 3 fans only).

The axial exhaust or supply fans shall bear the AMCA Certified Ratings Seals for Sound and Air Performance.

Fans shall be Model S1, S2 and SC3 as manufactured by Greenheck Fan Corporation, Schofield, Wisconsin, U.S.A.

Reversible Direct Drive

Direct drive, axial type sidewall fans shall be provided as follows:

Propellers shall be constructed with cast aluminum blades and hubs. A standard square key and set screw or tapered bushing shall lock the propeller to the motor shaft. All propellers shall be statically and dynamically balanced.

Motors shall be permanently lubricated, heavy duty type, carefully matched to the fan load and furnished at the specified RPM, voltage, phase, and enclosure.

Motor drive frame assemblies and fan panels shall be galvanized steel or painted steel. Drive frame assemblies shall be welded wire or formed channels and fan panels shall have prepunched mounting holes, formed flanges, and a deep formed double inlet venturi. Drive frames and panels shall be bolted construction or welded construction.

The axial exhaust or supply fans shall be tested in accordance AMCA Standard 301 in Sound and Air Performance.

Fans shall be Model SCR3 as manufactured by Greenheck Fan Corporation, Schofield, Wisconsin, U.S.A.

.

Our Warranty

Greenheck warrants this equipment to be free from defects in material and workmanship for a period of one year from the shipment date. Any units or parts which prove defective during the warranty period will be replaced at our option when returned to our factory, transportation prepaid. Motors are warranted by the motor manufacturer for a period of one year. Should motors furnished by Greenheck prove defective during this period, they should be returned to the nearest authorized motor service station. Greenheck will not be responsible for any removal or installation costs.

As a result of our commitment to continuous improvement, Greenheck reserves the right to change specifications without notice.

U.S. GREEN BUILDING COUNCIL MEMBER

Prepared to Support Green Building Efforts

GREENHECK
Building Value in Air.

P.O. Box 410 • Schofield, WI 54476-0410 • Phone (715) 359-6171 • greenheck.com

Copyright © 2009 Greenheck Fan Corp.
Sidewall Propeller Fans Rev. 5 July 2009 SP

LUH

Tag: 3270-HE-0020
Model: LUH-D-10-63-32

Horizontal Blower Heater

E7061

- **2.6 - 45 kW**
- **8,900 - 153,000 Btuh**
- **208, 240, 277, 480 and 600 Volt**
- **1 or 3 Phase**
- **Wall or Ceiling Mounted Configurations**

Description

Type LUH self-contained heater provides quiet, reliable fan-forced heating in all types of commercial and industrial applications.

Applications

- Shipping and Receiving Areas
- Pump Houses
- Power Generating Stations
- Aircraft Hangers
- Factories
- Warehouses
- Garages

Construction

Die Formed Cabinet — Heavy 18 gauge steel, phosphate undercoated for corrosion resistance and finished in almond polyester powder coat.

Louvers — Individually adjustable louvers direct air flow up or down as needed.

Fintube Heating Elements have corrosion resistant steel fins that are furnace brazed to the tubular element to assure long life and superior heat transfer.

Fan Motor — Totally enclosed fan motor is rated for continuous duty with built-in thermal cutout and operates on same voltage as the heating circuit.

Dynamically Balanced Fan is attached with rubber vibration insulators for smooth, quiet operation. Blade pitch is carefully selected so that the volume of air moved results in the optimum discharge air temperature.

Features

- **Sub-divided Circuits with Individual Fuse Protection —** Standard on all heaters with a total current draw of 48 Amps or greater. The fuse compartment is conveniently located for easy access.
- **Integral 120V Control Transformer —** Standard on 480V models, eliminates the need for an external control source (24V optional).
- **Heavy Duty Magnetic Contactors** are standard on all models.
- **Thermal Cutouts** open the control circuit and disconnect power to the heating elements if overheating occurs. **Automatic Reset** allows the control circuit to reclose and restore power when temperature returns to normal.
- **Field Convertible —** Combination 208/240V and 1 or 3 phase operation through 10 kW.
- **Mounting Configurations —** Recessed welded fasteners on top of the heater cabinet are internally threaded for suspension of unit with threaded rods. Ceiling and Universal Wall Swivel brackets are optional. The ceiling bracket lets you mount heater directly to ceiling or over-head member, simply and easily. The swivel mounting allows you to readily adjust the direction of warm air flow for maximum comfort up to 180 degrees.

Optional Features (Factory Installed or Field Installation Kits)

- **Summer Fan Switch Kit —** Field installable for circulating warm stratified air. Available for all models.
- **Thermostat Kit —** Field installable on all models. Range 40°F - 100°F.
- **Power Disconnect Kit —** Field installable switch enables power to be disconnected while servicing heater. 40, 80 and 100 Amp models available. Mounts in the back of the heater.
- **Ceiling Bracket** (shown above)
- **Wall Mounting Bracket**

Advantages

- Self Contained
- Versatile, Flexible and High Performance
- Easy Installation
- Minimum Maintenance
- Long Life
- Attractive Appearance

Because it has individually adjustable discharge louvers to direct air flow, and can be wall or ceiling (plus swivel) mounted, the LUH heater may be used in a variety of heating applications:

- Primary Heating
- Supplementary Heating
- Dual System Heating
- Spot Heating
- Entryway Air-Curtain Heating

Refer to WR-80, RTC, WR-90 in the Controls section.

LUH

Horizontal Blower Heater *(cont'd.)*

Dimensions (Inches)

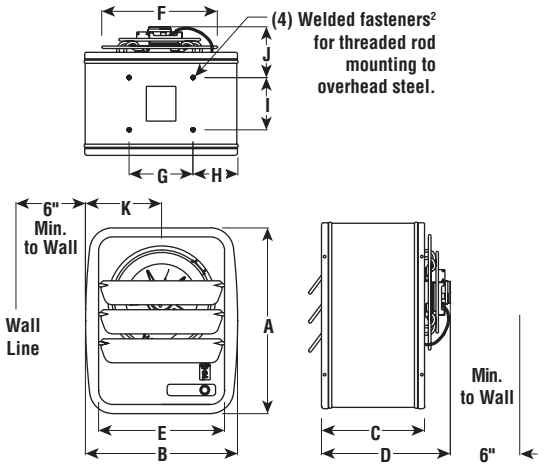

Wall Mounted Universal Bracket

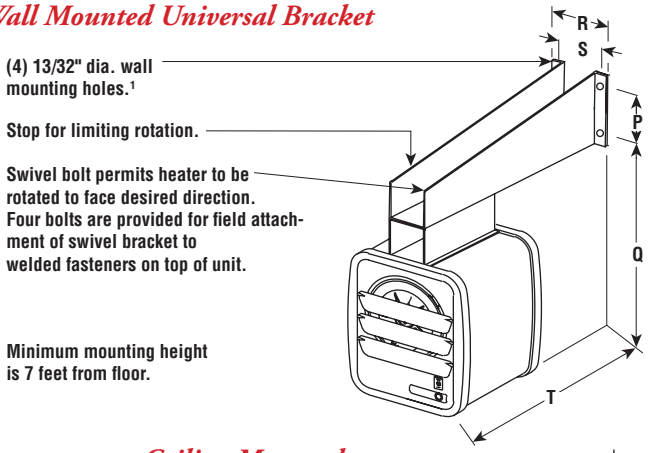

Ceiling Mounted

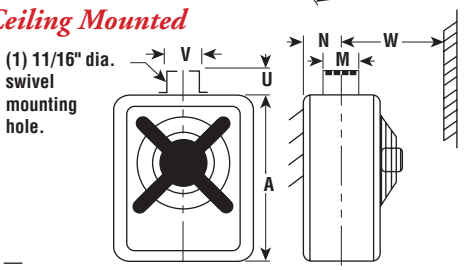

Notes —
1. Wall mounting fasteners to be supplied by customer.
2. Threaded rod to be supplied by customer.

Wall Mounted Heaters

Heater	Dimensions (In.) P	Q	R	S	T	Wall Bracket	PCN	Stock	Wt. (Lbs.)
LUH-02 to -05	1-3/4	21-1/2	6-3/4	5-1/2	14-15/16	**WUH-01A**	**303474**	**S**	3
LUH-07, 10, 12, 15	2	28-7/16	9-1/2	8-3/8	22-1/4	**WUH-02**	**300484**	**S**	5
LUH-20, 25	2	32	9-1/2	8-3/8	22-1/4	**WUH-02**	**300484**	**S**	7
LUH-30, 35, 40, 45	5-1/2	28-11/16	5	3-1/2	33-1/4	**WUH-03**	**300492**	**S**	10

Ceiling Mounted Heaters

Heater	Dimensions (In.) A	B	C	D	E	F	G	H	I	J	K	M	N	U	V	W	Ceiling Bracket	PCN	Stock	Wt. (Lbs.)
LUH-02 to -05	16	13-1/8	8-7/8	11-5/8	10-3/4	9-3/4	5-1/2	3-13/16	4-1/2	4-15/16	6-5/8	6	4-7/16	4	4-1/2	10-1/2	WUH-04A	303466	NS	1
LUH-07, 10, 12, 15	20-1/2	17-1/4	11-1/2	16-3/8	14-3/8	12-3/8	8-1/4	4-1/2	6-1/4	7-7/16	8-5/8	8	6-1/4	6	7-1/4	16	WUH-05	300513	NS	2
LUH-20, 25	24	20-1/8	11-1/2	20-1/2	16-3/4	16	8-1/4	6	6-1/4	12	10-1/16	8	6-1/4	6	7-1/4	16	WUH-05	300513	NS	3
LUH-30, 35, 40, 45	24	20-1/8	17	26	16-3/4	16	8-1/4	6	11-3/4	12	10-1/16	13-3/4	9-5/16	6	7-1/4	21	WUH-06	300521	NS	3

Optional Control Accessories & Remote Thermostats

Fan Only Operation Kits

Summer Fan Switch

Thermostat Kit

Note — A fan only operation (optional) is available by means of a built-in switch or by external control.

Summer Fan Switch	2 - 15 kW Model	PCN	20 - 45 kW Model	PCN	Stock	Wt. (Lbs.)
Internal 208 - 277V	ISFS-02[2]	305007	ISFS-02	305007	NS	0.25
External[1] with Relay (24V control)	ESFS-40	305015	ESFS-40A	305058	NS	0.5
External[1] with Relay (120V control)	ESFS-41	305023	ESFS-41A	305066	NS	0.5
External[1] with Relay (240V control)	ESFS-42	305031	ESFS-42A	305074	NS	0.5
External[1] with Relay (277V control)	ESFS-47	305040	—	—	NS	0.5

1. Kit includes wall plate (discard plate if switch is to be installed on heater).
2. Do not use for 480V rated heaters. 480V heaters require fan relay option with proper control voltage relay coil.

Thermostat Kits

Model	PCN	Stock	Wt. (Lbs.)
LUH-TK1 (SPST)	**301129**	**S**	0.25

Power Disconnect Kits

3 Pole, 600V Rating

Model	Rating	PCN	Stock	Wt. (Lbs.)
EDS-1	40 Amp*	**303431**	**S**	0.5
EDS-2	80 Amp	**303440**	**S**	0.5
EDS-3	100 Amp	303458	NS	1

* EDS-1 Rating for 480V or less is 50 Amp.

Mounting Limitations

Hazardous Atmosphere — Unit heaters should not be used in potentially explosive atmospheres. **Corrosive Atmosphere** —The finish is not intended for direct salt spray exposure in marine applications or the highly corrosive atmospheres of greenhouses, swimming pools, chemical storage bins, etc. **Mounting Height** — Do not install unit heaters above recommended maximum mounting height. **Obstructions** must not block unit heater air inlet or discharge.

LUH Horizontal Blower Heater *(cont'd.)*

Specifications and Ordering Information

Electrical (60 Hz)				Motor					Air Delivery				Ordering			
kW	Volts	Ckt & Phase	Amps[4]	Volts	Phase	HP	RPM	CFM	FPM	Temp. Rise (°F)	Horiz. Throw (Ft.)	Mtg.[5] Height (Ft.)	Model	Stock	PCN	Wt. (Lbs.)
2.6	208	1 - 1	13.1	208	1	1/40	1,650	410	880	21	12	8	**LUH-02-81-34**	**S**	**303001**	32
2.0/2.6	208/240	1 - 1	11.4[2]	240	1	1/40	1,650	410	880	21	12	8	**LUH-02-21-34**	**S**	**303010**	32
2.6	277	1 - 1	9.6	277	1	1/30	1,550	360	770	24	12	8	**LUH-02-71-35**	**S**	**303028**	32
4	208	1 - 1	19.8	208	1	1/40	1,650	410	880	31	12	8	**LUH-04-81-34**	**S**	**303036**	32
4	208	1 - 3[3]	11.7	208	1	1/40	1,650	410	880	31	12	8	**LUH-04-83-34**	**S**	**303044**	32
3/4	208/240	1 - 1	17.2[2]	240	1	1/40	1,650	410	880	31	12	8	**LUH-04-21-34**	**S**	**303052**	32
3/4	208/240	1 - 3[3]	10.2[2]	240	1	1/40	1,650	410	880	31	12	8	**LUH-04-23-34**	**S**	**303060**	32
4	277	1 - 1	14.6	277	1	1/30	1,550	360	770	35	12	8	**LUH-04-71-35**	**S**	**303079**	32
4	480	1 - 3	5.1	480	1	1/35	1,550	380	815	33	12	8	**LUH-04-43-32**	**S**	**303087**	32
5	208	1 - 1	24.6	208	1	1/40	1,650	410	880	39	12	8	**LUH-05-81-34**	**S**	**303095**	32
5	208	1 - 3[3]	14.5	208	1	1/40	1,650	410	880	39	12	8	**LUH-05-83-34**	**S**	**303108**	32
3.75/5	208/240	1 - 1	21.4	240	1	1/40	1,650	410	880	39	12	8	**LUH-05-21-34**	**S**	**303116**	32
3.75/5	208/240	1 - 3[3]	12.6	240	1	1/40	1,650	410	880	39	12	8	LUH-05-23-34	NS	303124	32
5	277	1 - 1	18.3	277	1	1/30	1,550	360	770	44	12	8	LUH-05-71-35	NS	303132	32
5	480	1 - 3	6.3	480	1	1/35	1,550	380	815	42	12	8	**LUH-05-43-32**	**S**	**303140**	32
7.5	208	1 - 1[3]	36.5	208	1	1/15	1,725	850	1,040	28	27	8	LUH-07-81-34	NS	303159	50
7.5	208	1 - 3	21.3	208	1	1/15	1,275	850	1,040	28	27	8	**LUH-07-83-34**	**S**	**303167**	50
5.6/7.5	208/240	1 - 1[3]	31.7[2]	240	1	1/15	1,725	850	1,040	28	27	8	**LUH-07-21-34**	**S**	**303175**	50
5.6/7.5	208/240	1 - 3	18.5[2]	240	1	1/15	1,725	850	1,040	28	27	8	LUH-07-23-34	NS	303183	50
7.5	277	1 - 1	27.7	277	1	1/15	1,550	750	920	32	27	8	LUH-07-71-35	NS	303191	50
7.5	480	1 - 3	9.9	480	3	1/15	1,725	850	1,040	28	27	8	**LUH-07-43-32**	**S**	**303204**	50
7.5	600	1 - 3	7.6	575	3	1/3	1,725	850	1,040	28	27	8	LUH-07-63-32	NS	—	50
9.7	208	1 - 1[3]	47.1	208	1	1/15	1,725	850	1,040	37	27	9	LUH-10-81-34	NS	303212	50
9.7	208	1 - 3	27.4	208	1	1/15	1,725	850	1,040	37	27	9	**LUH-10-83-34**	**S**	**303220**	50
7.5/10	208/240	1 - 1[3]	42.1[2]	240	1	1/15	1,725	850	1,040	37	27	9	**LUH-10-21-34**	**S**	**303239**	50
7.5/10	208/240	1 - 3	24.5[2]	240	1	1/15	1,725	850	1,040	37	27	9	LUH-10-23-34	NS	303247	50
10	480	1 - 3	12.9	480	3	1/15	1,725	850	1,040	37	27	9	**LUH-10-43-32**	**S**	**303255**	50
10	600	1 - 3	10.6	575	3	1/3	1,725	850	1,040	37	27	9	LUH-10-63-32	NS	—	50
12.5	208	1 - 3	35.2	208	1	1/15	1,725	850	1,040	47	27	9	**LUH-12-83-34**	**S**	**303263**	50
9.3/12.5	208/240	1 - 3	30.6	240	1	1/15	1,725	850	1,040	47	27	9	LUH-12-23-34	NS	303271	50
12.5	480	1 - 3	15.9	480	3	1/15	1,725	850	1,040	47	27	9	**LUH-12-43-32**	**S**	**303280**	50
12.5	600	1 - 3	12.6	575	3	1/3	1,725	850	1,040	47	27	9	LUH-12-63-32	NS	—	50
15	208	1 - 3	42.1	208	1	1/15	1,725	850	1,040	56	27	10	LUH-15-83-34	NS	303298	50
11.25/15	208/240	1 - 3	36.6[2]	240	1	1/15	1,725	850	1,040	56	27	10	LUH-15-23-34	NS	303300	50
15	480	1 - 3	19.0	480	3	1/15	1,725	850	1,040	56	27	10	**LUH-15-43-32**	**S**	**303319**	50
15	600	1 - 3	15.6	575	3	1/3	1,725	850	1,040	56	27	10	LUH-15-63-32	NS	—	50
14.5/19.4	208/240	1 - 3	48.0[2]	240	3	1/3	1,725	1,240	1,160	53	31	11	LUH-20-23-34	NS	303327	73
20	480	1 - 3	25.0	480	3	1/3	1,725	1,240	1,160	53	31	11	**LUH-20-43-32**	**S**	**303335**	73
20	600	1 - 3	19.6	575	3	1/3	1,725	1,240	1,160	53	31	11	LUH-20-63-32	NS	—	73
25	480	1 - 3	31.0	480	3	1/3	1,725	1,350	1,260	60	31	12	**LUH-25-43-32**	**S**	**303343**	73
25	600	1 - 3	24.6	575	3	1/3	1,725	1,350	1,260	60	31	12	LUH-25-63-32	NS	—	73
30	208	2 - 3	85.2	240	3	1/3	1,725	1,555	1,450	64	46	13	LUH-30-83-34	NS	303351	106
22.5/30	208/240	2 - 3	74.0[2]	240	3	1/3	1,725	1,555	1,450	64	46	13	LUH-30-23-34	NS	303360	106
30	480	2 - 3	37.1	480	3	1/3	1,725	1,555	1,450	64	46	13	**LUH-30-43-32**	**S**	**303378**	106
30	600	2 - 3	29.6	575	3	1/3	1,725	1,555	1,450	64	46	13	LUH-30-63-32	NS	—	106
26.25/35	208/240	2 - 3	86.0[2]	240	3	1/3	1,725	1,555	1,450	71	45	14	LUH-35-23-34	NS	303386	106
35	480	2 - 3	43.1	480	3	1/3	1,725	1,555	1,450	71	45	14	**LUH-35-43-32**	**S**	**303394**	106
35	600	2 - 3	34.7	575	3	1/3	1,725	1,555	1,450	71	45	14	LUH-35-63-32	NS	—	106
28.5/38	208/240	2 - 3	93.3	240	3	1/3	1,725	1,555	1,450	84	44	15	LUH-40-23-34	NS	303407	106
39	480	2 - 3	47.9	480	3	1/3	1,725	1,555	1,450	84	44	15	**LUH-40-43-32**	**S**	**303415**	106
40	600	2 - 3	39.7	575	3	1/3	1,725	1,555	1,450	84	44	15	LUH-40-63-32	NS	—	106
45	480	2 - 3	55.1	480	3	1/3	1,725	1,555	1,450	94	42	17	**LUH-45-43-32**	**S**	**303423**	106
45	600	2 - 3	43.7	575	3	1/3	1,725	1,555	1,450	94	42	17	LUH-45-63-32	NS	—	106

Stock Status: **S** = stock NS = non-stock
To Order—Specify model, PCN, kW, volts, phase and quantity.

1. For motor data, see table.
2. 208V amperage is 86% of 240V value.
3. Models can be field wired for 1 or 3 phase.
4. Includes motor Amps.
5. Maximum mounting height for effective heat distribution. Minimum height is 7 feet.

Other Notes —

A. All heaters have built-in contactors and stock 480V models have built-in control transformers and contactor with 120V holding coils. All stock 208 and 240V models have 208/240V holding coils. All stock 277V models have 277V holding coils.
B. Optional contactors available with 120 or 24V holding coils on made-to-order models, contact your Local Chromalox Sales office.
C. When total heater capacity exceeds 48 Amps, built-in fusing is provided behind a hinged and latched door in the side which allows easy access.

LUH Horizontal Blower Heater *(cont'd.)*

Recommended Control Options

PCN	Description	Kits: Thermostat	Fan Only	Remote Fan	Dis-connect
303001	LUH-02-81-34-00 208V 1P 2.6kW	LUH-TK1	ISFS-02	ESFS-42	EDS-1
303010	LUH-02-21-34-00 240V 1P 2.6kW	LUH-TK1	ISFS-02	ESFS-42	EDS-1
303028	LUH-02-71-35-00 277V 1P 2.6kW	LUH-TK1	ISFS-02	ESFS-47	EDS-1
303036	LUH-04-81-34-00 208V 1P 4kW	LUH-TK1	ISFS-02	ESFS-42	EDS-1
303044	LUH-04-83-34-00 208V 3P 4kW	LUH-TK1	ISFS-02	ESFS-42	EDS-1
303052	LUH-04-21-34-00 240V 1P 4kW	LUH-TK1	ISFS-02	ESFS-42	EDS-1
303060	LUH-04-23-34-00 240V 3P 4kW	LUH-TK1	ISFS-02	ESFS-42	EDS-1
303079	LUH-04-71-35-00 277V 1P 4kW	LUH-TK1	ISFS-02	ESFS-47	EDS-1
303087	LUH-04-43-32-00 480V 3P 4kW	LUH-TK1	ESFS-41	ESFS-41	EDS-1
303095	LUH-05-81-34-00 208V 1P 5kW	LUH-TK1	ISFS-02	ESFS-42	EDS-1
303108	LUH-05-83-34-00 208V 3P 5kW	LUH-TK1	ISFS-02	ESFS-42	EDS-1
303116	LUH-05-21-34-00 240V 1P 5kW	LUH-TK1	ISFS-02	ESFS-42	EDS-1
303124	LUH-05-23-34-00 240V 3P 5kW	LUH-TK1	ISFS-02	ESFS-42	EDS-1
303132	LUH-05-71-35-00 277V 1P 5kW	LUH-TK1	ISFS-02	ESFS-47	EDS-1
303140	LUH-05-43-32-00 480V 3P 5kW	LUH-TK1	ESFS-41	ESFS-41	EDS-1
303159	LUH-07-81-34-00 208V 1P 7.5kW	LUH-TK1	ISFS-02	ESFS-42	EDS-1
303167	LUH-07-83-34-00 208V 3P 7.5kW	LUH-TK1	ISFS-02	ESFS-42	EDS-1
303175	LUH-07-21-34-00 240V 1P 7.5kW	LUH-TK1	ISFS-02	ESFS-42	EDS-1
303183	LUH-07-23-34-00 240V 3P 7.5kW	LUH-TK1	ISFS-02	ESFS-42	EDS-1
303191	LUH-07-71-35-00 277V 1P 7.5kW	LUH-TK1	ISFS-02	ESFS-47	EDS-1
303204	LUH-07-43-32-00 480V 3P 7.5kW	LUH-TK1	ESFS-41	ESFS-41	EDS-1
303212	LUH-10-81-34-00 208V 1P 10kW	LUH-TK1	ISFS-02	ESFS-42	EDS-2

PCN	Description	Kits: Thermostat	Fan Only	Remote Fan	Dis-connect
303220	LUH-10-83-34-00 208V 3P 10kW	LUH-TK1	ISFS-02	ESFS-42	EDS-1
303239	LUH-10-21-34-00 240V 1P 10kW	LUH-TK1	ISFS-02	ESFS-42	EDS-2
303247	LUH-10-23-34-00 240V 3P 10kW	LUH-TK1	ISFS-02	ESFS-42	EDS-1
303255	LUH-10-43-32-00 480V 3P 10kW	LUH-TK1	ESFS-41	ESFS-41	EDS-1
303263	LUH-12-83-34-00 208V 3P 12.5kW	LUH-TK1	ISFS-02	ESFS-42	EDS-1
303271	LUH-12-23-34-00 240V 3P 12.5kW	LUH-TK1	ISFS-02	ESFS-42	EDS-1
303280	LUH-12-43-32-00 480V 3P 12.5kW	LUH-TK1	ESFS-41	ESFS-41	EDS-1
303298	LUH-15-83-34-00 208V 3P 15kW	LUH-TK1	ISFS-02	ESFS-42	EDS-2
303300	LUH-15-23-34-00 240V 3P 15kW	LUH-TK1	ISFS-02	ESFS-42	EDS-1
303319	LUH-15-43-32-00 480V 3P 15kW	LUH-TK1	ESFS-41	ESFS-41	EDS-1
303327	LUH-20-23-34-00 240V 3P 20kW	LUH-TK1	ISFS-02	ESFS-42A	EDS-2
303335	LUH-20-43-32-00 480V 3P 20kW	LUH-TK1	ESFS-41A	ESFS-41A	EDS-1
303343	LUH-25-43-32-00 480V 3P 25kW	LUH-TK1	ESFS-41A	ESFS-41A	EDS-1
303351	LUH-30-83-34-00 208V 3P 30kW	LUH-TK1	ISFS-02	ESFS-42A	EDS-3
303360	LUH-30-23-34-00 240V 3P 30kW	LUH-TK1	ISFS-02	ESFS-42A	EDS-2
303378	LUH-30-43-32-00 480V 3P 30kW	LUH-TK1	ESFS-41A	ESFS-41A	EDS-1
303386	LUH-35-23-34-00 240V 3P 35kW	LUH-TK1	ISFS-02	ESFS-42A	EDS-3
303394	LUH-35-43-32-00 480V 3P 35kW	LUH-TK1	ESFS-41A	ESFS-41A	EDS-2
303407	LUH-40-23-34-00 240V 3P 40kW	LUH-TK1	ISFS-02	ESFS-42A	EDS-3
303415	LUH-40-43-32-00 480V 3P 40kW	LUH-TK1	ESFS-41A	ESFS-41A	EDS-2
303423	LUH-45-43-32-00 480V 3P 45kW	LUH-TK1	ESFS-41A	ESFS-41A	EDS-2

When ordering LUH heaters, specify the model number and corresponding PCN (Product Code Number). If controls or thermostat/fan options are required, designate these options in the model number when ordering, as shown below. Always specify voltage, phase and kW by listing them on the purchase order product specifications.

Model Numbers

Chromalox Horizontal Unit Heater

Heating Elements

02 = 2.6 kW
04 = 4.0 k W
05 = 5.0 kW
07 = 7.5 kW
10 = 10.0 kW
12 = 12.5 kW
15 = 15.0 kW
20 = 20.0 kW
25 = 25.0 kW
30 = 30.0 kW
35 = 35.0 kW
40 = 40.0 kW
45 = 45.0 kW

Heater Voltage and Phase

81 = 208V, 1 Phase
83 = 208V, 3 Phase
21 = 240V, 1 Phase
23 = 240V, 3 Phase
71 = 277V, 1 Phase
43 = 480V, 3 Phase
63 = 600V, 3 Phase

Control

0 0 No Contactor(s)
3 0 24V Control Internal Transformer
3 1 24V Control Externally Supplied
3 2 120V Control Internal Transformer
3 3 120V Control Externally Supplied
3 4 208/240V Control Internally Supplied, No Transformer
3 5 277V Control Internally Supplied

Control

0 0 No Thermostat, No Summer Fan Switch
4 0 Internal Thermostat Only
4 1 Internal Therm. and Internal Sum. Fan Sw.
4 2 External Sum. Fan Sw. Only (Not 480V)
4 3 External Sum. Fan Sw. and Fan Relay (All Volts)
4 4 Rem. Fan Sw. and Internal Therm. (Not 480V)
4 5 Rem. Fan Sw., Fan Relay and Int. Therm. (All Volts)D, E, F, G
4 6 Internal Sum. Fan Sw. (Not 480 V)
4 7 Internal Sum. Fan Sw., Fan Relay (All Volts)

Disconnect Switch

1 40 Amp
2 80 Amp
3 100 Amp

LUH 05 21 34 41 1 Typical Model Number

FORM

amec

TITLE:	SUPPLIER DOCUMENT FRONT SHEET	DOC. NO.:	DOC-FOR-000037 Rev. 1
PROJECT NAME:		PROJECT NO.:	

Hayward Gordon	100126-PJ270	Reagent Systems
Company Name	*PO/Contract Number*	*Package/Contract Description*

Sodium Metabisulphite Dust Collector Data Sheet

Document Title

3	18-Mar-15	Annelly Portillo	AP
Total Number of Pages (Including Front Sheet)	*Submission Date*	*Submitted By - Print Name*	*Supplier Approval - Signature*

Equipment Tag Number(s)

3270-BH-0042		

Secondary SDDRL Code(s)

	0	100126-PJ270-D02-0002.001	01
Supplier/Contractor Document Number	*Supplier Rev.*	*AMEC Project Document No.*	*AMEC Issue No.*

Note: This FRONT SHEET is to be used for all non-drawing documents and if the drawing does not have sufficient space for an electronic decal.

Project Review:

Permission to proceed does not constitute acceptance of design, calculations, test methods or materials developed or selected by Seller and does not relieve Seller from full compliance with contractual or other obligations.

- [x] 1. REVIEWED - NO COMMENT
- [ ] 2. REVISE AND RESUBMIT - WORK MAY PROCEED SUBJECT TO INCORPORATION OF COMMENTS
- [ ] 3. REVISE AND RESUBMIT - WORK MAY NOT PROCEED
- [ ] 4. REVIEW NOT REQUIRED - FOR INFORMATION ONLY

James Lobo

AMEC Signature

16 APR 15

Date

Data Sheet

Title	**Reagent Systems**			**Proj Doc No.**	**100126-PJ270-D02-0002.001**	
Proj Name	Rainy River Gold Project			**AMEC Doc. No.**	**100126-PJ270-D02-0002.001**	
Client	New Gold			**Proj No.**	100126	
Supplier		**AWBS No.**		**Plant/Area No.**	3200	Pkg No. PJ270

	Item		**1**	
	Equipment Number		**3270-BH-0042**	
	Equipment Description		**Sodium Metabisulphite Dust Collector**	
1	**Process Data & Requirements**	Unit		Rev
2	**General**			
3	Quantity Required		1	
4	Operating / Spare		1 / 0	
5	Temperature	°C	5 - 35	
6				
7	**VENDOR TO COMPLETE**			
8				
9	**General**			
10	Manufacturer		Macrotek	
11	Make / Model Number		MWBV-84-36	
12	Paint / Finish		External Paint	
13	**Housing Section**			
14	Housing Material		Carbon Steel	
15	Housing Material Thickness		10ga	
16	Access Doors		24" diameter inspection port	
17	Lifting Lugs		included	
18	Filter / Fan Access Platform		N/A	
19	**Fan**			
20	Flow Rate	acfm	1880	
21	External Static Pressure (ESP)			
22	Total Static Pressure (TSP)	" w.c.	8	
23	Manufacturer		New York Blower	
24	Make / Model Number		20-GI 194_DH	
25	Type / Arrangement		Centrifugal / Arr 10	
26	Material		Carbon Steel	
27	Class		TBD	
28	Fan Wheel Diameter / Type of Blades	"	20" / Radial	
29	Drive Type		Electric Motor	
30	Fan BHP at Operating Point	HP	~5	
31	Fan Efficiency	%	60%	
32	Outlet Velocity	m/s (ft/s)	48ft/s	
33	Fan Speed	m/s (ft/s)	2255 RPM	
34	Equipment Noise Level	dBa	77.2 dBa @ 3ft (ducted in and out)	
35	Fan Siilencer if required		N/A	
36	Bearings L10 Rating, > 100,000 hr		TBD	
37	Guards		Included	
38	Extended SS Lube Lines		N/A	
39	**Fan Motor**			
40	Electrical Service		Continuous	
41	Manufacturer		Teco	
42	Motor Type		TEFC	
43	Fan Motor Size and Speed, kW (HP), RPM		7.5HP, 1800RPM	
44	Completed Motor Nameplate Data		TBD	
45	Fan and Motor Weight	kg (lbs)	TBD	
46	**Filter Section**			
47	Number of Bags / Cartridges	Qty.	36	
48	Total Filter Area	m² (ft²)	382 ft2	
49	Air to Cloth Ratio		4.1:1	
50	Filter Media Type		polyester	
51	Overall Efficiency		99%+	
52	Filter Pressure Drop	Pa (in.wg.)	up to 6in w.g.	
53	Housing Material and Thicness		10ga	
54	Auto Cleaning Mechanism Assembly		pulse jet, high pressure low volume	
55	**Compressed Air**			
56	Compressed Air Pressure	psig	80-100 psig	
57	Compressed Air Consumption	kPa (PSIG)	6-10 scfm	
58	**Air Lock Section**	Sm³/hr (SCFM)		
59	Manufacturer		N/A	
60	Size		N/A	
61	Model Number		N/A	
62	Motor and Drive		N/A	

Data Sheet

Title	**Reagent Systems**			**Proj Doc No.**	**100126-PJ270-D02-0002.001**	
Proj Name	Rainy River Gold Project			**AMEC Doc. No.**	**100126-PJ270-D02-0002.001**	
Client	New Gold			**Proj No.**	100126	
Supplier		**AWBS No.**		**Plant/Area No.**	3200	Pkg No. PJ270

	Item		**1**	
	Equipment Number		**3270-BH-0042**	
	Equipment Description		**Sodium Metabisulphite Dust Collector**	
63	Motor Size, kW (HP), RPM, V/Ph/Hz		N/A	
64	Motor Type		N/A	
65				
66	**Electrical and Controls**			
67	Power Supply		120V	
68	Control Voltage		120V	
69	Main Starters and Disconnects		575V (fan)	
70	Control Panel		120V	
71	Control Circuit Transformer		N/A	
72	Control Circuit Fuses		N/A	
73	Control Relays		N/A	
74	Pressure Sensors		24VDC loop	
75	LED Lights		N/A	
76	Timers		Dwyer timer board	
77	Dry Contact (Unit Status suitable for Plant PCS Connectio		x1	
78	Dry Contact (Common Alarm suitable for Plant PCS Conn		x1	
79	One Dry Contact (Connection to Fire Alarm and Unit Shut		x1	
80			**3270-HO-0032 / 0033**	
81	**Hopper**		**CUSO4 Mixing Tank Feed Hopper / Sodium Metabisulphite Feed Hopper**	
82	Quantity Required		2	
83	Operating / Spare		2 / 0	
82	Hopper Material			
83	Hopper Material Thickness	mm		
84	Hopper Slope	degree		
85	Hopper Access Doors			
86	Mounting Legs			
87	Hopper Dimensions L x W x H			
88			**3270-XX-0060 / 0061**	
89	**Lifting Beam**		**Lifting Beam for Superbag No. 1 / No. 2**	
90	Quantity Required		2	
91	Operating / Spare		2 / 0	
92	Capacity	kg	1000	
93	Content		CUSO4 and Sodium Metabisulphite	
94				
95	**Shipping Data**			
96	Ovrall Dimensions (L x W x H)			
97	Overall Weight	m (Ft)		
98	Largest Section (L x W x H)	kg (lbs)		
99	Largest Section Weight	m (Ft)		
100	Winterization Required	kg (lbs)		
101				

Notes

CHIEFTAIN 1700

The Powerscreen® Chieftain 1700 is a mid-sized track mobile screen aimed at end users requiring high volumes of finished products in applications including topsoil, coal, crushed stone, recycling, iron ore, sand and gravel.

User benefits include a quick set-up time, drop down tail conveyor and screen mesh access system to aid screen media changes and a transverse power unit arrangement to simplify servicing.

Features & Benefits

- 2 or 3 deck
- Radio controlled tipping grid
- Integrated high capacity variable speed belt feeder
- Grease filled 2 bearing screenbox
- Heavy duty single shaft screenboxes with adjustable stroke, angle and speed
- Screen walkway and access ladder
- Hydraulic folding conveyors with excellent stockpiling capacity
- Patented fully mounted hydraulic folding auxiliary stockpile conveyor (3 deck)

Options

- Wheel or track mobile
- Double deck vibrating grizzly
- Radio controlled tracking
- Anti roll-back
- Dual Power (additional electric hydraulic drive)
- Roll-in bogie prepared
- Roll-in bogie equipped
- Quick release screen wedge tensioning
- Auto lubrication system
- Dust suppression
- Extended recirculation conveyor attached for transport (3 deck)
- Hydraulic screen tensioning (Bottom Deck)

CHIEFTAIN 1700	TRACK (2 DECK)	WHEEL (2 DECK)	TRACK (3 DECK)	WHEEL (3 DECK)
Weight (Est)	26,900kg (59,304lbs)	24,700kg (54,454lbs)	29,800kg (65,698lbs)	27,500kg (60,627lbs)
Transport width	3m (9'10")	3m (9'10")	3m (9'10")	3m (9'10")
Transport length	16.53m (54'3")	16.81m (55'2")	16.53m (54'3")	16.81m (55'2")
Transport height	3.43m (11'3")	3.6m (11'10")	3.5m (11'6")	3.88m (12'9")
Working width	17.32m (56'10")	17.32m (56'10")	17.32m (56'10")	17.32m (56'10")
Working length	17.22m (56'6")	17.22m (56'6")	17.22m (56'6")	17.22m (56'6")
Working height	5.82m (19'1")	6.21m (20'4")	5.89m (19'4")	6.19m (20'4")

*Output potential depends on application

Engines are available that are certified to US EPA and EU off road diesel emission standards. Talk to your dealer about possible certification options (i.e. Tier 3/Stage 3A, Tier 4i/Stage 3B, Tier 4F/Stage 4).

Output Potential
Up to 500tph (551 US tph)*

Power Unit
Tier 3/Stage 3A:
CAT C4.4 ATAAC 83kW (111hp)
Optional Diesel Engine:
Tier 4F/Stage 4:
CAT C4.4 82kW (110hp)
CAT C4.4 98kW (131hp)
Fuel tank capacity: 336 L (88 US Gal)

Main Conveyor
Width: 1050mm (42")
Hydraulically adjustable

Tail Conveyor (Finesize)
Width: 1200mm (48")
Discharge height: 4.23m (13'10")

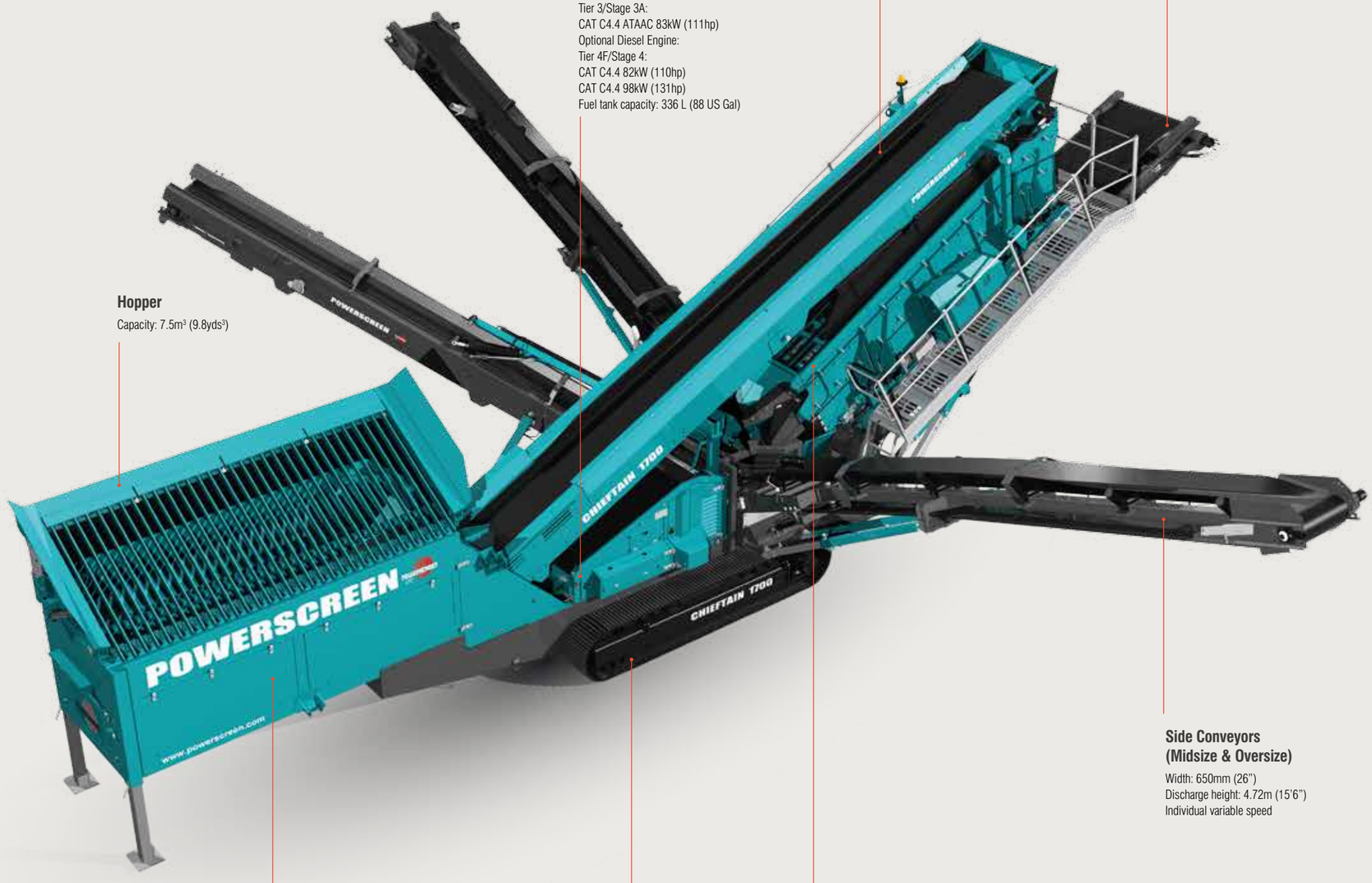

Hopper
Capacity: 7.5m³ (9.8yds³)

Side Conveyors (Midsize & Oversize)
Width: 650mm (26")
Discharge height: 4.72m (15'6")
Individual variable speed

Feeder Conveyor
Width: 1050mm (42")
Individual variable speed

Tracks
Width: 400mm (15.7")

Screenbox
2 Bearing, 2 or 3 deck screenbox
Size: 4.8m x 1.53m (16' x 5')

POWERSCREEN®
A TEREX BRAND

PREMIERTRAK 600/600E

The Powerscreen® Premiertrak 600 range of high performance primary jaw crushing plants are designed for large and medium scale operators in quarrying, demolition, recycling & mining applications. The range includes the Premiertrak 600 & Premiertrak 600E both equipped with the advanced high performance 1200mm x 820mm Terex chamber. Built for the toughest of applications, the robust construction and modern design of the Premiertrak 600 ensures optimum performance, reliability and efficiency.

The Premiertrak 600E comes complete with an on-board diesel generator. The machine can be powered from this, or from an external power supply. There is sufficient excess power available to run a second machine such as a screener. This versatility along with the electrically driven crusher and conveyors makes the Premiertrak 600E highly efficient, economical and environmentally friendly.

Features & Benefits

- Ground level quick set-up with hydraulic folding feed hopper with hydraulic locking system
- Heavy duty wear resistant feed hopper
- Stepped self-cleaning grizzly feeder with under feeder screen
- Wide bypass chute to optimise material flow
- Aggressive crushing action with high swing jaw encouraging material entry into crushing chamber
- Fully hydraulic crusher setting adjustment
- Excellent under crusher access for removal of wire with hydraulic raise lower product conveyor
- Angle adjustable product conveyor, lowers for access & transport
- Low fuel consumption due to highly efficient direct drive system and low engine RPM
- Easily accessed power-unit canopy
- Modern & user-friendly PLC control system with auto start facility
- Remote control via umbilical
- Dust suppression system
- Fitted with Powerscreen Pulse Telematics system

Options

- Pre-screen system
- Wire mesh for underscreen (standard)
- Quarry tooth, pyramid tooth or heavy duty fixed jaw plates
- Deflector plate under crusher
- Side conveyor
- Single pole overband magnetic separator
- Twin pole overband magnetic separator
- Belt weigher
- Electric refuelling pump
- Electric urea pump
- Hydraulic water pump
- Radio remote control
- Stockpiler drive (Tier 4 machines only)

Applications

- Sand & gravel
- Blasted rock
- River rock
- C & D waste
- Overburden
- Foundry waste
- Processed ores
- Processed minerals

PREMIERTRAK	600	600E
Weight (est.) with side conveyor & magnet	68,875kg (151,843lbs)	72,725kg (162,535lbs)
Transport width	3m (9' 10")	3.12m (10' 3")
Transport length	17.1m (56' 1")	17.1m (56' 1")
Transport height	3.8m (12' 5")	3.8m (12' 5")
Working width with side conveyor	8.09m (26' 5")	8.09m (26' 7")
Working length	16.63m (54' 7")	16.63m (54' 7")
Working height	4.49m (14' 9")	4.49m (14' 9")

*Depends on application

Engines are available that are certified to US EPA and EU off road diesel emission standards. Talk to your dealer about possible certification options (i.e. Tier 3/Stage 3A.; Tier 4i/Stage 3B.; Tier 4F / Stage 4).

Output Potential

Up to 600tph (661 US tph)*

Crusher

High capacity single toggle jaw with aggressive throw and hydraulic adjustment
Chamber size: 1200mm x 820mm (47" x 32")
Min CSS: 75mm (3")*
Max CSS: 200mm (8")*

Hopper

Wear resistant feed hopper
Length: 4.72m (15'6")
Width: 2.2m (7' 3")
Capacity: 14.2m³ (18.6yd³)

Side Conveyor (option)

Width: 750mm (29.5")
Discharge height: 3.8m (12' 6")

Feeder

Spring mounted vibrating pan and grizzly feeder
Pan length: 2.15m (7' 1")
Pan width: 1.16m (3' 10")
Grizzly length: 2.12m (6' 11")
Grizzly width: 1.14m (3' 9")

Product Conveyor

Width: 1200mm (47")
Discharge height: 4m (13' 1")
Discharge height: 4.6m (15' 1")
(extended conveyor option)

Power Unit

Premiertrak 600 (Direct Drive)
Tier 3/Stage 3A:
CAT C13 328kW (440hp)
Tier 4F/Stage 4:
Scania DC13 84A 331kW (444hp)
Fuel tank capacity: 750 L (198 US Gal)

Premiertrak 600E (Electric Drive)
Tier 2/Stage 2:
Scania DC13 74A 331kW (444hp)
Tier 4F/Stage 4:
Scania DC13 85A 331kW (444hp)
Fuel tank capacity: 750 L (198 US Gal)

Tracks

Width: 500mm (19.7")

POWERSCREEN®
A TEREX BRAND

Safety Data Sheet

SECTION 1 – IDENTIFICATION

Name, Address, and Telephone of the Responsible Party

Dyno Nobel Inc.
6440 S. Millrock Drive, Suite 150
Salt Lake City, Utah 84121
Phone: 801-364-4800 Fax 801-321-6703
E-Mail: dnna.hse@am.dynonobel.com www.dynonobel.com

SDS #: 1052
Date: 07/20/2020
Supersedes: 10/02/2018

Product Identifier
Product Form: Mixture
Product Name: Bulk Emulsion

Other Means of Identification
Synonyms:

DYNO GOLD®
DYNO GOLD® LITE
EXTRAMITE 1000
RUG-1 (Canada Only)
TITAN® 1000
TITAN® 1000 GREEN
TITAN® 1000G
TITAN® 1000G GREEN
TITAN® XL1000
TITAN® XL1000 GREEN
SMS 1116, 1116A, 1126P, 1136P, 1146P
DX5037
TITAN® HD
TITAN® 2000
TITAN® 2000G
TITAN® PB 1000
TITAN® PB 2000
TITAN® PB 2000 HF
TITAN® SME 1000
TITAN® SME 1000 GREEN
TITAN® SME 2000
TITAN® 5000
TITAN® 5000 G
TITAN® 7000 G

Intended Use of the Product
Industrial blasting applications as emulsion explosive precursor

Emergency Telephone Number
FOR 24 HOUR EMERGENCY, CALL **CHEMTREC (USA)** **800-424-9300**
CANUTEC (CANADA) **613-996-6666**

SECTION 2 – HAZARD(S) IDENTIFICATION

Classification of the Substance or Mixture
Classification (GHS-US)

Ox. Liq. 2	H272
Acute Tox. 4 (Oral)	H302
Skin Irrit. 2	H315
Carc. 2	H351
STOT RE 2	H373
Asp. Tox. 1	H304
Eye Irrit. 2B	H320

Label Elements
GHS-US Labeling
Hazard Pictograms (GHS-US) :

Signal Word (GHS-US) : Danger

DYNO®
Dyno Nobel

Groundbreaking Performance®

Hazard Statements (GHS-US) : H272 - May intensify fire; oxidizer
H302 - Harmful if swallowed
H304 – May be fatal if swallowed and enters airways
H315 - Causes skin irritation
H320 – Causes eye irritation
H351 - Suspected of causing cancer
H373 - May cause damage to organs through prolonged or repeated exposure

Precautionary Statements (GHS-US) : P201 - Obtain special instructions before use
P202 - Do not handle until all safety precautions have been read and understood
P210 - Keep away from heat, hot surfaces, open flames, sparks. - No smoking
P220 - Keep/Store away from clothing, combustible materials, combustibles
P221 - Take any precaution to avoid mixing with combustible materials, clothing, combustibles
P233 - Keep container tightly closed
P260 - Do not breathe dust, fume, mist, spray, vapors
P264 - Wash exposed areas thoroughly after handling
P270 - Do not eat, drink or smoke when using this product
P273 - Avoid release to the environment
P280 - Wear protective gloves/protective clothing/eye protection/face protection
P301+P310 - IF SWALLOWED: Immediately call a POISON CENTER or doctor/physician
P302+P352 - IF ON SKIN: Wash with plenty of soap and water
P305+P351+P338 - If in eyes: Rinse cautiously with water for several minutes. Remove contact lenses, if present and easy to do. Continue rinsing
P308+P313 - If exposed or concerned: Get medical advice/attention
P332+P313 - If skin irritation occurs: Get medical advice/attention
P362 - Take off contaminated clothing and wash before reuse
P370+P378 - In case of fire: Use appropriate media to extinguish
P403+P235 - Store in a well-ventilated place. Keep cool
P405 - Store locked up
P501 - Dispose of contents/container according to local, regional, national, and international regulations

Other Hazards
Hazards Not Otherwise Classified (HNOC): Not available
Other Hazards: Exposure may aggravate those with pre-existing eye, skin, or respiratory conditions.

SECTION 3 - COMPOSITION/INFORMATION ON INGREDIENTS

Mixture

Name	Product identifier	% (w/w)	Ingredient Classification (GHS-US)
Ammonium nitrate	(CAS No) 6484-52-2	45 - 80	Ox. Sol. 3, H272 Eye Irrit. 2A, H319
Calcium nitrate	(CAS No) 10124-37-5	0.1 - 35	Ox. Sol. 3, H272 Acute Tox. 4 (Oral), H302

			Eye Dam. 1, H318
Sodium nitrate	(CAS No) 7631-99-4	0.1 - 18	Ox. Sol. 3, H272 Acute Tox. 4 (Oral), H302 Eye Irrit. 2A, H319
*Methylamine nitrate	(CAS No) 22113-87-7	0.1 – 3	Expl. 1.5, H205 Skin Corr. 1A, H314 Eye Dam. 1 – H318
**Fuels, diesel, no. 2	(CAS No) 68476-34-6	0.1 - 10	Flam. Liq. 4, H227 Acute Tox. 4 (Inhalation), H332 Skin Irrit. 2, H315 Carc. 2, H351 STOT RE 2, H373 Asp. Tox. 1, H304
Distillates, petroleum, chemically neutralized light naphthenic	(CAS No) 64742-35-4	0.1 - 6	Asp. Tox. 1, H304

* This ingredient is not used in most products, including in GREEN-named products.
** This ingredient is not used in GREEN-named products.
Ingredients, other than those mentioned above, as used in this product are not hazardous as defined under current Department of Labor regulations or are present in deminimus concentrations (less than 0.1% for carcinogens, less than 1.0% for other hazardous materials).
Full text of H-phrases: see section 16

SECTION 4 - FIRST AID MEASURES

Description of First Aid Measures

General: Never give anything orally to an unconscious person. If you feel unwell, seek medical advice (provide this Safety Data Sheet to medical personnel).

Inhalation: If symptoms occur, go into fresh air and ventilate suspected area. Seek medical attention.

Skin Contact: Remove contaminated clothing. Wash with soap and water followed by rinsing with water. Seek medical attention if irritation develops or persists. Wash contaminated clothing before reuse.

Eye Contact: Rinse cautiously with water for several minutes. Remove contact lenses, if present and easy to do. Continue rinsing for at least 15 minutes. Obtain medical attention if irritation develops or persists.

Ingestion: Rinse mouth. Do NOT induce vomiting. Seek medical attention immediately.

Most Important Symptoms and Effects Both Acute and Delayed

General: May be harmful if swallowed. May cause eye or skin irritation.

Inhalation: May cause respiratory irritation.

Skin Contact: May cause skin irritation.

Eye Contact: May cause eye irritation.

Ingestion: Likely to be harmful if swallowed.

Chronic Symptoms: Contains an ingredient which may cause cancer. Causes damage to organs through prolonged or repeated exposure.

Indication of Any Immediate Medical Attention and Special Treatment Needed

If symptoms occur, seek medical attention.

SECTION 5 - FIRE-FIGHTING MEASURES

Extinguishing Media

Suitable Extinguishing Media: Do not attempt to fight fires involving explosive materials or emulsion explosive precursors. Evacuate all personnel to a predetermined safe location, no less than 1/2 mile (800 meters) in all directions.

Unusual Fire and Explosion Hazards: May explode or detonate under fire conditions. Burning material may produce toxic vapors.

Unsuitable Extinguishing Media: Not available

Special Hazards Arising from the Substance or Mixture
In large, intense fires the emulsion can behave more like an explosive and detonate from confinement or strong shocks. Evacuation of at least 1 mile is recommended if a largeamount of emulsion is involved in a large fire.
Fire Hazard: May intensify fire; oxidizer. Will burn if exposed to heat, and in addition, will accelerate the burning of other combustibles, resulting in more rapid spread of fire.
Explosion Hazard: Heat may build pressure, rupturing closed containers, spreading fire and increasing risk of burns and injuries. May explode when subjected to fire, supersonic shock or high-energy projectile impact, especially when confined or in large quantities.
Reactivity: May cause or intensify fire; oxidizer. May accelerate the burning of other combustible materials.
Advice for Firefighters
Precautionary Measures Fire: DO NOT ATTEMPT TO FIGHT FIRES INVOLVING EXPLOSIVE MATERIALS. Evacuate all personnel to a predetermined safe location, no less than 1/2 mile (800 meters) in all directions. Can explode or detonate under fire conditions. Burning material may produce toxic vapors.

Firefighting Instructions: DO NOT ATTEMPT TO FIGHT FIRE. Immediately evacuate all personnel from the area to a safe distance. Guard against re-entry. Thermal decomposition can lead to release of irritating gases and vapors.
Protection During Firefighting: When controlling fire before involvement of explosives or explosive precursors, fire-fighters should wear positive pressure self-containing breathing apparatus (SCBA) and full turnout gear.
Hazardous Combustion Products: Nitrogen oxides. Carbon oxides (CO, CO_2). Ammonia.
Other information: Do not attempt to fight fires involving explosive materials or emulsion explosive precursors. Evacuate all personnel to a predetermined safe location, no less than 1/2 mile (800 meters) in all directions.
Reference to Other Sections: Refer to section 9 for flammability properties.

SECTION 6 - ACCIDENTAL RELEASE MEASURES

Personal Precautions, Protective Equipment and Emergency Procedures
General Measures: Avoid all contact with skin, eyes, or clothing. Avoid breathing dust, mist, or spray. Keep away from heat/sparks/open flames/hot surfaces. No smoking. Eliminate every possible source of ignition. Evacuate danger area.
For Non-Emergency Personnel
Protective Equipment: Use appropriate personal protection equipment (PPE).
Emergency Procedures: Evacuate unnecessary personnel.
For Emergency Personnel
Protective Equipment: Use appropriate personal protection equipment (PPE).
Emergency Procedures: Ventilate area.

Environmental Precautions
Prevent entry to sewers and public waters.

Methods and Material for Containment and Cleaning Up
For Containment: Contain any spills with dikes as necessary to prevent migration and entry into sewers or streams. Do not take up in combustible material such as: saw dust or cellulosic material.
Methods for Cleaning Up: Collect spillage for possible reuse. Clean up spills immediately and dispose of waste in accordance with appropriate state, federal and local regulations.
Reference to Other Sections
See heading 8, Exposure Controls and Personal Protection

SECTION 7 - HANDLING AND STORAGE

Precautions for Safe Handling
It is recommended that users of explosives material be familiar with the Institute of Makers of Explosives Safety Library publications.
Additional Hazards When Processed: When heated to decomposition, emits toxic fumes. Do not puncture or incinerate containers.

Hygiene Measures: Handle in accordance with good industrial hygiene and safety procedures. Wash hands and other exposed areas with mild soap and water before eating, drinking, or smoking and again when leaving work.

Conditions for Safe Storage, Including Any Incompatibilities

Storage Conditions: Store in a dry, cool and well-ventilated place. Keep container closed when not in use. Keep /store away from combustible materials, extremely high or low temperatures, direct sunlight, ignition sources, incompatible materials.

Incompatible Materials: Corrosives, strong acids, strong bases and alkalis.

SECTION 8 - EXPOSURE CONTROLS/PERSONAL PROTECTION

Control Parameters

Occupational Exposure Limits

Ingredients:	Product identifier:	ACGIH TLV-TWA	OSHA PEL-TWA
Ammonium nitrate	(CAS No) 6484-52-2	None	None
Sodium nitrate	(CAS No) 7631-99-4	None	None
Calcium nitrate	(CAS No) 10124-37-5	None	None
Methylamine nitrate	(CAS No) 22113-87-7	None	None
Fuels, diesel, no. 2	(CAS No) 68476-34-6	100 ppm	None
Distillates, petroleum, chemically neutralized light naphthenic	(CAS No) 64742-35-4	5 mg/m^3 (mist)	None

Exposure Controls

Under normal conditions of use, over-exposure is not expected to occur.

Appropriate Engineering Controls: Ensure all national/local regulations are observed. Ensure adequate ventilation, especially in confined areas. Keep containers tightly sealed.

Personal Protective Equipment: Protective goggles. Gloves. Protective clothing.

Materials for Protective Clothing: Chemically resistant materials and fabrics.

Hand Protection: Wear chemically resistant protective gloves.

Eye Protection: Chemical goggles or face shield.

Skin and Body Protection: Not available.

Respiratory Protection: Use NIOSH-approved air-purifying or supplied-air respirator where airborne concentrations of vapor or mist are expected to exceed exposure limits. Under normal conditions of use and handling there is minimal likelihood for the this exposure limit to be reached.

Other Information: When using or handling, do not eat, drink or smoke.

SECTION 9 - PHYSICAL AND CHEMICAL PROPERTIES

Information on Basic Physical and Chemical Properties

Physical State	:	Liquid
Appearance	:	Translucent to opaque viscous liquid.
Odor	:	Fuel
Odor Threshold	:	Not available
pH	:	Not available
Relative Evaporation Rate (butylacetate=1)	:	< 1
Melting Point	:	Not available

Freezing Point	:	Not available
Boiling Point	:	Not available
Flash Point	:	Not available
Auto-ignition Temperature	:	Not available
Decomposition Temperature	:	Not available
Flammability (solid, gas)	:	Not available
Lower Flammable Limit	:	Not available
Upper Flammable Limit	:	Not available
Vapor Pressure	:	Not available
Relative Vapor Density at 20 °C	:	Not available
Relative Density	:	Not available
Specific Gravity	:	0.8 - 1.5 g/cc
Solubility	:	Water: Nitrate salts are completely soluble, but emulsion dissolution is very slow.
Partition coefficient: n-octanol/water	:	Not available
Viscosity	:	Not available
Explosion Data – Sensitivity to Mechanical Impact	:	Not sensitive to mechanical impact. May be sensitive to supersonic explosively driven projectile impacts.
Explosion Data – Sensitivity to Static Discharge	:	Not sensitive to static discharge.

SECTION 10 - STABILITY AND REACTIVITY

Reactivity: May cause or intensify fire. May accelerate the burning of other combustible materials.

Chemical Stability: May intensify fire. May explode when subjected to fire, supersonic shock or high-energy projectile impact, especially when confined or in large quantities.

Possibility of Hazardous Reactions: Hazardous polymerization will not occur.

Conditions to Avoid: Direct sunlight. Extremely high temperatures. Heat. Sparks. Overheating. Open flame. Combustible materials. Sources of ignition. Incompatible materials.

Incompatible Materials: Corrosives, strong acids, strong bases and alkalis.

Hazardous Decomposition Products: Does not decompose when used and stored as recommended. Thermal decomposition or combustion products may include the following substances: Nitrogen oxides. Toxic vapors. Ammonia. Carbon monoxide.

SECTION 11 - TOXICOLOGICAL INFORMATION

Under normal conditions of use, over-exposure is not expected to occur. Minor skin exposure is most likely.

Information on Toxicological Effects - Product

Acute Toxicity: Harmful if swallowed.

LD50 and LC50 Data: ATE Oral 1,510 (mg/kg)

Skin Corrosion/Irritation: Causes skin irritation.

Serious Eye Damage/Irritation: May cause eye irritation

Respiratory or Skin Sensitization: Not classified

Germ Cell Mutagenicity: Not classified

Teratogenicity: Not available

Carcinogenicity: Contains a substance which has been shown to cause cancer in laboratory animals. IARC Group 2A Probably carcinogenic to humans.

Specific Target Organ Toxicity (Repeated Exposure): May cause damage to organs through prolonged or repeated exposure.

Reproductive Toxicity: Not classified
Specific Target Organ Toxicity (Single Exposure): Not classified
Aspiration Hazard: May be fatal if swallowed and enters airways.
Symptoms/Injuries After Inhalation: May cause respiratory irritation.
Symptoms/Injuries After Skin Contact: May cause skin irritation.
Symptoms/Injuries After Eye Contact: May cause eye irritation.
Symptoms/Injuries After Ingestion: May be harmful if swallowed. May be harmful if swallowed and enters airways. Aspiration into the lungs can occur during ingestion or vomiting and may cause lung injury.
Chronic Symptoms: May cause cancer. May cause damage to organs through prolonged or repeated exposure.

Information on Toxicological Effects - Ingredient(s)

LD50 and LC50 Data:

Ammonium nitrate (6484-52-2)	
LD50 Oral Rat	2217 mg/kg (REACH dossier 2950 mg/kg)
LC50 Inhalation Rat	> 88.8 mg/l/4h
ATE CLP (oral)	2217.000 mg/kg body weight
Sodium nitrate (7631-99-4)	
LD50 Oral Rat	1267 mg/kg (REACH dossier 3430 mg/kg)
ATE CLP (oral)	1267.000 mg/kg body weight
Fuels, diesel, no. 2 (68476-34-6)	
ATE CLP (vapors)	11.000 mg/l/4h
Distillates, petroleum, chemically neutralized light naphthenic (64742-35-4)	
LD50 Oral Rat	> 5000 mg/kg
LD50 Dermal Rabbit	> 2000 mg/kg

SECTION 12: ECOLOGICAL INFORMATION

Toxicity Harmful to aquatic life with long lasting effects.

Ammonium nitrate (6484-52-2)	
LC50 Fish 1	95-102 mg/l (Exposure time: 48 h - Cyprinus carpio (Common carp))
EC 50 Aquatic Invertebrates	490 mg/l (Exposure time 48 h - Daphnia magna)
Sodium nitrate (7631-99-4)	
LC50 Fish 1	2000 mg/l (Exposure time: 96 h - Species: Lepomis macrochirus [static])
LC 50 Fish 2	994.4 - 1107 mg/l (Exposure time: 96 h - Species: Oncorhynchus mykiss [static])
Fuels, diesel, no. 2 (68476-34-6)	
LC50 Fish 1	35 mg/l (Exposure time: 96 h - Species: Pimephales promelas [flow-through])
Calcium nitrate (10124-37-5)	
LC50 Fish 1	10000 mg/l (Exposure time: 96 h - Species: Lepomis macrochirus [static])

Persistence and Degradability

Bulk Emulsion	
Persistence and Degradability	Not established.
Sodium nitrate (7631-99-4)	
Persistence and Degradability	**Readily biodegradable in water.**

Bioaccumulative Potential	
Bulk Emulsion	
Bioaccumulative Potential	Not established.
Ammonium nitrate (6484-52-2)	
BCF fish 1	(no bioaccumulation expected)
Log Pow	-3.1 (at 25 °C)
Sodium nitrate (7631-99-4)	
Log Pow	-3.8 (at 25 °C)
Bioaccumulative Potential	Not expected to bioaccumulate.

Mobility in Soil Not available
Other Adverse Effects
Other Information: Avoid release to the environment.

SECTION 13 – DISPOSAL CONSIDERATIONS

Waste Treatment Methods: Contact manufacturer for advice on proper disposal methods.
Waste Disposal Recommendations: Collect spillage for possible reuse. Dispose of waste material in accordance with all local, regional, national, provincial, territorial and international regulations.
Additional Information: Clean up even minor leaks or spills if possible without unnecessary risk.

SECTION 14 - TRANSPORT INFORMATION

14.1 In Accordance with DOT

Proper Shipping Name : AMMONIUM NITRATE EMULSION
Hazard Class : 5.1
Identification Number : UN3375
Label Codes : 5.1

Packing Group : II
ERG Number : 140

14.2 In Accordance with IMDG

Proper Shipping Name : AMMONIUM NITRATE EMULSION
Hazard Class : 5.1
Identification Number : UN3375
Packing Group : II
Label Codes : 5.1
EmS-No. (Fire) : F-H
EmS-No. (Spillage) : S-Q

14.3 In Accordance with IATA

Proper Shipping Name : AMMONIUM NITRATE EMULSION
Identification Number : UN3375
Hazard Class : 5
Label Codes : 5.1

ERG Code (IATA) : 5L

14.4 In Accordance with TDG

No UN number exists for blasting intermediates for Transport Canada (use the following for Canadian shipments)
Proper Shipping Name : EXPLOSIVE, BLASTING, TYPE E
Packing Group : II
Hazard Class : 1.5D

Safety Data Sheet

Identification Number	: UN0332
Label Codes	: 1.5D

SECTION 15 - REGULATORY INFORMATION

US Federal Regulations

Bulk Emulsion

SARA Section 311/312 Hazard Classes	Immediate (acute) health hazard Reactive hazard Delayed (chronic) health hazard Fire hazard

Ammonium nitrate (6484-52-2)

Listed on the United States TSCA (Toxic Substances Control Act) inventory

Sodium nitrate (7631-99-4)

Listed on the United States TSCA (Toxic Substances Control Act) inventory

Fuels, diesel, no. 2 (68476-34-6)

Listed on the United States TSCA (Toxic Substances Control Act) inventory

Calcium nitrate (10124-37-5)

Listed on the United States TSCA (Toxic Substances Control Act) inventory

Distillates, petroleum, chemically neutralized light naphthenic (64742-35-4)

Listed on the United States TSCA (Toxic Substances Control Act) inventory

US State Regulations

Ammonium nitrate (6484-52-2)

U.S. – California – Air Toxics "Hot Spots" (A-I)
U.S. - Massachusetts - Right To Know List
U.S. - New Jersey - Right to Know Hazardous Substance List
U.S. - Pennsylvania - RTK (Right to Know) - Environmental Hazard List
U.S. - Pennsylvania - RTK (Right to Know) List
U.S. – Rhode Island – RTK (Right to Know) List

Sodium nitrate (7631-99-4)

U.S. - Massachusetts - Right To Know List
U.S. - Pennsylvania - RTK (Right to Know) List
U.S. – Rhode Island – RTK (Right to Know) List

Fuels, diesel, no. 2 (68476-34-6)

U.S. - New Jersey - Right to Know Hazardous Substance List

Calcium nitrate (10124-37-5)

U.S. - New Jersey - Right to Know Hazardous Substance List

Canadian Regulations

Bulk Emulsion

WHMIS Classification	**Note: Explosives are not regulated under WHMIS. They are subject to the regulations of the Explosives Act of Canada.**

This product has been classified in accordance with the hazard criteria of the Controlled Products Regulations (CPR) and the SDS contains all of the information required by CPR.

SECTION 16: OTHER INFORMATION, INCLUDING DATE OF PREPARATION OR LAST REVISION

Revision date	: 07/20/2020

Safety Data Sheet

Other Information : This document has/ been prepared in accordance with the SDS requirements of the OSHA Hazard Communication Standard 29 CFR 1910.1200.

GHS Full Text Phrases:

Acute Tox. 4 (Inhalation)	Acute toxicity (inhalation) Category 4
Acute Tox. 4 (Oral)	Acute toxicity (oral) Category 4
Asp. Tox. 1	Aspiration hazard Category 1
Carc. 2	Carcinogenicity Category 2
Eye Dam. 1	Serious eye damage/eye irritation Category 1
Eye Irrit. 2A	Serious eye damage/eye irritation Category 2A
Flam. Liq. 3	Flammable liquids Category 3
Ox. Liq. 2	Oxidizing liquids Category 2
Ox. Sol. 3	Oxidizing solids Category 3
Skin Irrit. 2	Skin corrosion/irritation Category 2
STOT RE 2	Specific target organ toxicity (repeated exposure) Category 2
H205	May mass explode in fire
H227	Combustible liquid
H272	May intensify fire; oxidizer
H302	Harmful if swallowed
H304	May be fatal if swallowed and enters airways
H314	Causes severe skin burns and eye damage
H315	Causes skin irritation
H318	Causes serious eye damage
H319	Causes serious eye irritation
H332	Harmful if inhaled
H351	Suspected of causing cancer
H373	May cause damage to organs through prolonged or repeated exposure
H373	May cause damage to organs (Thymus, Liver, bone marrow) through prolonged or repeated exposure

Party Responsible for the Preparation of This Document

Dyno Nobel Inc.
6440 S. Millrock Drive, Suite 150
Salt Lake City, Utah 84121
Phone: 801-364-4800

Disclaimer

Dyno Nobel Inc. and its subsidiaries disclaim any warranties with respect to this product, the safety or suitability thereof, the information contained herein, or the results to be obtained, whether express or implied, INCLUDING WITHOUT LIMITATION, ANY IMPLIED WARRANTY OF MERCHANTABILITY OR FITNESS FOR A PARTICULAR PURPOSE AND/OR OTHER WARRANTY. The information contained herein is provided for reference purposes only and is intended only for persons having relevant technical skills. Because conditions and manner of use are outside of our control, the user is responsible for determining the conditions of safe use of the product. Buyers and users assume all risk, responsibility and liability whatsoever from any and all injuries (including death), losses, or damages to persons or property arising from the use of this product or information. Under no circumstances shall either Dyno Nobel Inc. or any of its subsidiaries be liable for special, consequential or incidental damages or for anticipated loss of profits.
Dyno Nobel SDS

APPENDIX G. ACOUSTIC ASSESSMENT

ACOUSTIC ASSESSMENT REPORT
APRIL 2021 UPDATE

Environmental Compliance Approval (ECA)
No. 0412-A2LR4V

New Gold Inc.
Rainy River Mine

Prepared By:

TRINITY CONSULTANTS
885 Don Mills Road, Suite 106
Toronto, Ontario
M3C 1V9
416-391-2527

April 26, 2021

Project 217201.0040

EXECUTIVE SUMMARY

Trinity Consultants Ontario Inc. (Trinity) was retained by New Gold Inc. to prepare an updated Acoustic Assessment Report (AAR) for their Rainy River Mine (Site) located within the Township of Chapple. The Site operates under Amended Environmental Compliance Approval (ECA) No. 0412-A2LR4V which include a Limited Operational Flexibility condition that permits the Site to make modifications that are within the scope of its permitted operations.

The primary noise sources from the Site include truck traffic, various construction equipment, process exhaust stacks, ancillary equipment (i.e. transformers, air compressors, water pumps) and emergency equipment (i.e. emergency generators, fire pumps).

This report is an update of the AAR dated March 26, 2021 and has been updated to assess a new portable crusher to be operated near the main Primary Crusher.

The scope of the acoustic assessment involved the following aspects:

- Sound levels of new noise sources were estimated using manufacturer sound performance data or were based on sound levels measured as part of the previous AARs;
- The overall noise impact at sensitive points of reception was predicted during the worst-case operating scenarios; and
- The noise impacts at the points of reception were assessed for compliance with the MECP sound level limits.

The overall noise impacts at PORs were predicted during the worst-case operating scenarios, and the noise impacts at the PORs were assessed for compliance with the MECP noise limits. The AAR was prepared in a manner that satisfies the requirements of NPC Publication NPC-300.

The worst-case noise impacts at the sensitive receptors generated by the steady noise sources at the Site are summarized below in Table (i). The worst-case noise impacts at the sensitive receptors generated by the non-emergency operation of emergency equipment at the Site are summarized below in Table (ii). Based on the results of the acoustic assessment, it can be concluded that the noise impacts at the sensitive receptors from the Site's worst-case daytime and evening and nighttime operations will meet the sound levels limits specified in MECP noise publication NPC-300.

Table (i). Acoustic Assessment Summary Table – Steady Noise Sources

Point of Reception ID	Description of Reception Point [a]	Site L_{eq} (dBA)			Verified by Acoustic Audit	Performance Limits (dBA)			Compliance with Performance Limit
		Day	Evening	Night		Day	Evening	Night	
POR1	House 01 – North	39	39	39	No	45	40	40	Yes
POR2	House 02 – East	35	32	32	No	45	40	40	Yes
POR3	House 03 – East	34	32	32	No	45	40	40	Yes
POR4	House 04 – East	35	33	33	No	45	40	40	Yes
POR6	House 06 – Southeast	37	34	34	No	45	40	40	Yes
POR7	House 07 – South	34	31	31	No	45	40	40	Yes
POR8	House 08 – South	36	33	33	No	45	40	40	Yes
POR9	House 09 – South	39	33	33	No	45	40	40	Yes
POR10	House 10 – South	41	35	35	No	45	40	40	Yes
POR11	House 11 – South	42	37	37	No	45	40	40	Yes
POR12	House 12 – South	44	38	38	No	45	40	40	Yes
POR14	House 14 – South	45	40	40	No	45	40	40	Yes
POR15	House 15 – West	40	39	39	No	45	40	40	Yes
POR16	House 16 – West	40	40	40	No	45	40	40	Yes
POR17	House 17 – Northwest	40	40	40	No	45	40	40	Yes
POR19	Vacant Lot Near Pinewood River	32	32	32	No	45	40	40	Yes
POR20	Vacant Lot 56041-0138	42	40	40	No	45	40	40	Yes
POR21	Vacant Lot 56036-0023	45	39	39	No	45	40	40	Yes
POR22	Vacant Lot 56036-0184	42	37	37	No	45	40	40	Yes
POR23	Vacant Lot 56041-0037	42	40	40	No	45	40	40	Yes
POR24	Vacant Lot 56041-0135	42	40	40	No	45	40	40	Yes
POR25	Vacant Lot 56041-0139	43	40	40	No	45	40	40	Yes

[a] For each of the existing dwellings, the Acoustic Assessment Summary Table only provides the noise impacts at the most impacted reception point, which is the 2nd storey plane of window reception points; the noise impacts at the other reception points for the existing dwellings (i.e. outdoor and 1st storey reception points) are lower than the impacts at the 2nd storey reception point and are therefore not shown in this table.

Table (ii). Acoustic Assessment Summary Table – Emergency Equipment

Point of Reception ID	Description of Reception Point [a]	Site L_{eq} (dBA)			Verified by Acoustic Audit	Performance Limits (dBA)			Compliance with Performance Limit
		Day	Evening	Night		Day	Evening	Night	
POR1	House 01 – North	46	N/A [b]	N/A [b]	No	50	N/A [b]	N/A [b]	Yes
POR2	House 02 – East	45	N/A [b]	N/A [b]	No	50	N/A [b]	N/A [b]	Yes
POR3	House 03 – East	45	N/A [b]	N/A [b]	No	50	N/A [b]	N/A [b]	Yes
POR4	House 04 – East	45	N/A [b]	N/A [b]	No	50	N/A [b]	N/A [b]	Yes
POR6	House 06 – Southeast	44	N/A [b]	N/A [b]	No	50	N/A [b]	N/A [b]	Yes
POR7	House 07 – South	40	N/A [b]	N/A [b]	No	50	N/A [b]	N/A [b]	Yes
POR8	House 08 – South	42	N/A [b]	N/A [b]	No	50	N/A [b]	N/A [b]	Yes
POR9	House 09 – South	42	N/A [b]	N/A [b]	No	50	N/A [b]	N/A [b]	Yes
POR10	House 10 – South	43	N/A [b]	N/A [b]	No	50	N/A [b]	N/A [b]	Yes
POR11	House 11 – South	43	N/A [b]	N/A [b]	No	50	N/A [b]	N/A [b]	Yes
POR12	House 12 – South	44	N/A [b]	N/A [b]	No	50	N/A [b]	N/A [b]	Yes
POR14	House 14 – South	45	N/A [b]	N/A [b]	No	50	N/A [b]	N/A [b]	Yes
POR15	House 15 – West	41	N/A [b]	N/A [b]	No	50	N/A [b]	N/A [b]	Yes
POR16	House 16 – West	41	N/A [b]	N/A [b]	No	50	N/A [b]	N/A [b]	Yes
POR17	House 17 – Northwest	37	N/A [b]	N/A [b]	No	50	N/A [b]	N/A [b]	Yes
POR19	Vacant Lot Near Pinewood River	32	N/A [b]	N/A [b]	No	50	N/A [b]	N/A [b]	Yes
POR20	Vacant Lot 56041-0138	45	N/A [b]	N/A [b]	No	50	N/A [b]	N/A [b]	Yes
POR21	Vacant Lot 56036-0023	47	N/A [b]	N/A [b]	No	50	N/A [b]	N/A [b]	Yes
POR22	Vacant Lot 56036-0184	43	N/A [b]	N/A [b]	No	50	N/A [b]	N/A [b]	Yes
POR23	Vacant Lot 56041-0037	48	N/A [b]	N/A [b]	No	50	N/A [b]	N/A [b]	Yes
POR24	Vacant Lot 56041-0135	45	N/A [b]	N/A [b]	No	50	N/A [b]	N/A [b]	Yes
POR25	Vacant Lot 56041-0139	46	N/A [b]	N/A [b]	No	50	N/A [b]	N/A [b]	Yes

[a] For each of the existing dwellings, the Acoustic Assessment Summary Table only provides the noise impacts at the most impacted reception point, which is the 2nd storey plane of window reception points; the noise impacts at the other reception points for the existing dwellings (i.e. outdoor and 1st storey reception points) are lower than the impacts at the 2nd storey reception point and are therefore not shown in this table.

[b] Non-emergency operation of emergency equipment does not occur during evening and nighttime periods

TABLE OF CONTENTS

1. INTRODUCTION 1-1

2. SITE DESCRIPTION 2-1

3. NOISE MEASUREMENT SUMMARY 3-1

4. NOISE SOURCE SUMMARY 4-1
   - 4.1 Vehicle Traffic 4-1
   - 4.2 Other Heavy Machinery & Processing Equipment 4-2
   - 4.3 Mill Building and Process Stacks 4-2
   - 4.4 Ancillary Equipment 4-3
   - 4.5 Emergency Equipment 4-3
   - 4.6 Insignificant Sources 4-3
   - 4.7 Noise Control Equipment 4-3

5. LAND USE ZONING PLAN & POINTS OF RECEPTION 5-1
   - 5.1 Scaled Area Location Plan 5-1
   - 5.2 Land Use Zoning Plan 5-1
   - 5.3 Points of Reception 5-1

6. NOISE IMPACT ANALYSIS & ACOUSTIC ASSESSMENT SUMMARY 6-1
   - 6.1 Procedure Used to Assess Noise Impacts at Each POR 6-1
   - 6.2 List of Parameters and Assumption Used in Calculations and Model 6-1
   - 6.3 Rationale for Selecting Applicable Limits 6-1
   - 6.4 Predictable Worst-Case Impact Operating Scenario 6-2
   - 6.5 Point of Reception Noise Impact Summary 6-2
   - 6.6 Acoustic Assessment Summary 6-3

7. CONCLUSIONS 7-1

8. SUPPORTING SUMMARY TABLES & FIGURES 8-1

APPENDIX A. PLANS & DRAWINGS A-1

APPENDIX B. SLM SPECIFICATIONS B-1

APPENDIX C. WEATHER DATA C-1

APPENDIX D. NOISE SOURCES & CALCULATIONS D-1

APPENDIX E. ACOUSTIC MODEL INPUTS AND OUTPUTS E-1

1. INTRODUCTION

Trinity Consultants Ontario Inc. (Trinity) was retained by New Gold Inc. to prepare an updated Acoustic Assessment Report (AAR) for their Rainy River Mine (Site) located within the Township of Chapple. The Site operates under Amended Environmental Compliance Approval (ECA) No. 0412-A2LR4V which include a Limited Operational Flexibility condition that permits the Site to make modifications that are within the scope of its permitted operations.

The primary noise sources from the Site include truck traffic, various construction equipment, process exhaust stacks, ancillary equipment (i.e. transformers, air compressors, water pumps) and emergency equipment (i.e. emergency generators, fire pumps).

This report is an update of the AAR dated March 26, 2021 and has been updated to assess a new portable crusher to be operated near the main Primary Crusher.

The scope of the acoustic assessment involved the following aspects:

- Sound levels of new noise sources were estimated using manufacturer sound performance data or were based on sound levels measured as part of the previous AARs;
- The overall noise impact at sensitive points of reception was predicted during the worst-case operating scenarios; and
- The noise impacts at the points of reception were assessed for compliance with the MECP sound level limits.

The AAR was prepared in a manner that satisfies the requirements of NPC Publication NPC-300.

2. SITE DESCRIPTION

The Site is an operational open pit gold mine containing opening pit mining, aggregate extraction, processing plant and related facilities and activities. Ore is processed at the on-site processing plant while mine rock and overburden are stockpiled on-site in dedicated areas. Site activities and operations include ore and aggregate extraction, crushing plants, ore processing plants, vehicle traffic and mining and construction equipment operations.

The Rainy River Mine (RRM) began processing ore on September 14, 2017 and completed its first gold pour on October 5, 2017. Commercial production began on October 19, 2017. Development of the underground mine began in the second half of 2018. The Site and surrounding lands are predominately privately held, with New Gold holding a considerable private land package. New Gold has been exploring the property since 2015 when it was purchased from Rainy River Resources and is now operating an open pit mine, underground gold mine, and milling complex on the site.

The NAICS code for the Site is 212220 – Gold and Silver Ore Mining.

The Site operates 24 hours a day and 7 days a week.

3. NOISE MEASUREMENT SUMMARY

Trinity conducted a site visit at the Site on June 21, 2019 wherein all sources of noise were identified, and noise measurements were collected for some of the operating sources. Additional measurements were collected by Site personnel on December 22, 2020.

Refer to Table D1 in Appendix D summarizing the significant and insignificant noise sources identified at the Site. Refer to Figure A3 in Appendix A for a site plan showing the location of the significant noise sources at the Site.

Sound pressure levels were measured in accordance with MECP Publication NPC-103 using a Larson Davis SoundExpert LxT sound level meter, with a PRMLXT1L preamplifier and a 377B20 Type 1 removable microphone. One 3.5-inch WS001 wind screen was used over the microphone for all measurements. For steady sound measurements, the meter was set to slow response and Z-weighting. A Larson Davis CAL200 acoustical calibrator was used to calibrate the sound meter at the start and end of the measurement program. Refer to Appendix B for meter specifications.

Weather conditions during the June 21, 2019 site visit were overcast with wind speeds of approximately 15 to 18 km/hr (between 9 AM and 11 AM). Weather conditions during the December 22, 2020 site visit were overcast with wind speeds of approximately 13 km/hr.

No precipitation occurred during either sampling events. Refer to Appendix C for meteorological data obtained from Environment Canada collected at the Fort Frances RCS weather station (WMO ID 71962) in Fort Frances, Ontario on the noted site visit date. This weather station is located approximately 52 km from the Site.

Sources of noise that were deemed to be tonal in character (emitting a hum, whine, buzz) were penalized by increasing the sound level by 5 dBA per MECP Publication NPC-104. Noise generating equipment operates either continuously or intermittently depending on process requirements. Refer to Table D2 in Appendix D for assumed operating times of individual equipment.

4. NOISE SOURCE SUMMARY

Table 8-1 in Section 8 presents a summary of noise sources identified at the Site that have a significant impact on sensitive points of reception. Refer to Figure A3 for the location of the significant noise sources at the Site.

4.1 Vehicle Traffic

Mining trucks (i.e. Komatsu 830 E) are used to transfer material (i.e. ores, mine rocks and overburden) from the open pit mine to the ore processing mill and stockpiles. Sound level measurements from the previous AAR were used as part of this assessment. As there is significant difference in the sound levels between a loaded mining truck and an unloaded mining trucks, the loaded and unloaded mining trucks were represented as separate one-way truck routes in the model (i.e. a one-way truck route to represent unloaded truck route and a one-way truck route along the same path to present the loaded truck route). There are five mining truck routes:

- From the open pit mine to the stockpile by the primary crusher at the ore processing mill: 6 round trips per hour (i.e. 6 empty truck trips and 6 loaded truck trips per hour)
- From the open pit mine to the LGO stockpile: 4 round trips per hour (i.e. 4 empty truck trips and 4 loaded truck trips per hour)
- From the open pit mine to the PAG stockpile: 16 round trips per hour (i.e. 16 empty truck trips and 16 loaded truck trips per hour)
- From the open pit mine to the NPAG stockpile: 11 round trips per hour (i.e. 11 empty truck trips and 11 loaded truck trips per hour)
- From the open pit mine to the overburden stockpile: 2 round trips per hour (i.e. 2 empty truck trips and 2 loaded truck trips per hour)
- From the open pit mine to the TMA stockpile: 5 round trips per hour (i.e. 5 empty truck trips and 5 loaded truck trips per hour)

Rock trucks (i.e. Komatsu 400) are used to transfer material that is used part of the TMA construction activities. In the 2020 operating year, the TMA constructions activities occurred only at the TMA South Dam. Sound level measurements from previous AARs were used as part of this assessment. The sound levels were not noted to vary significantly between the loaded and unloaded rock trucks; therefore, one (1) line source was used to represent each truck route. The following truck route associated with the rock trucks was included as part of the assessment:

- From the TMA storage piles to the TMA South Dam: 16 round trips per hour (i.e. 16 empty truck trips and 16 loaded truck trips per hour)

Sound level measurements for other truck traffic at the Site were obtained from the previous AAR. Other truck traffic at the Site include:

- water trucks (Komatsu CR20000) are used to apply water or dust suppressant to the haul roads. The water trucks were considered to make two round trips per hour on each haul route used by the rock trucks moving to and from the open pit mine.

- motor grader (CAT 16H, 16M or 24M) is used for construction and maintenance of the haul routes. The motor graders were considered to make one round trip per hour on each haul route used by the rock trucks moving to and from the open pit mine.

All truck traffic associated with mining operations at the Site were considered to operate continuously and simultaneously during the daytime, evening and nighttime periods. The truck traffic associated with the construction activities were considered to operate continuously and simultaneously during the daytime periods only.

4.2 Other Heavy Machinery & Processing Equipment

The Site uses various heavy machinery and ore/aggregate processing equipment as part of the open pit mining, aggregate extraction, material handling and material transfer activities.

The main Primary Crusher is located south of the Mill at the ore stockpile and a portable crushing plant near the East Outcrop area.

The Site is proposing to operate a new portable crusher and generator set near this main Primary Crusher to crush and remove steel in ore extracted from the underground mine.

The sound levels for these construction equipment and processing equipment were obtained from the previous AARs. Sound levels for the portable crushing plant near the East Outcrop area were measured by New Gold personnel in 2020. Sound levels for the portable crusher to be operated near the main Primary Crusher was estimated based on previous measurements collected of a similar unit. The generator associated with this portable crusher was estimated using manufacturer sound level data. For all other construction equipment, measurements were previously collected for each type and model of the equipment.

The equipment at the open pit mine, the primary crusher at the Mill and the track dozers at the stockpiles can operate 24 hours a day. Although the track dozers at the stockpiles can operate 24 hours a day, the operation of the Komatsu D475 is limited to daytime periods only, while other track dozer models can operate during the evening and nighttime periods in lieu of the Komatsu D475.

At the TMA dam construction, all construction equipment were considered to operate during the daytime periods only.

4.3 Mill Building and Process Stacks

The Site contains various processing and pollution control equipment at the Site, including dust collectors and a wet scrubber. The exhausts from the dust collectors and the wet scrubber were included as significant sources n this assessment. These equipment were considered to operate simultaneously and continuously during the Site's worst-case one-hour daytime, evening and nighttime periods.

The sound levels for these equipment were obtained from the previous AARs.

There are several significant sources of noise inside the Mill building. There are multiple points of egress for these sources of noise into the outdoor environment. The east and west facades of the Mill building were each included in the model as sources of noise. The sound levels from the Mill building were measured by Trinity during a previous site visit.

4.4 Ancillary Equipment

Other equipment that are significant sources of noise include air compressors, water pumps and transformers. The four (4) are compressors are located at the Water Management Pond while the water pumps are located throughout the Site. The transformers are located at the substation located northeast of the Mill building.

The sound levels for these equipment were obtained from the previous AAR.

These equipment were considered to operate continuously and simultaneously during the Site's worst-case one-hour daytime, evening and nighttime periods.

4.5 Emergency Equipment

The Site contains two (2) CAT 2,500 kW emergency generators located at the substation and two fire pumps at the process plant. The sound level limits for these emergency equipment were obtained from the previous AAR.

The emergency generators and the fire pumps are tested during the daytime periods only.

The non-emergency operation of all emergency equipment were conservatively considered to occur simultaneously and continuously for the worst-case daytime one-hour period.

4.6 Insignificant Sources

Refer to Table D1 in Appendix D for a summary of the insignificant noise sources identified at the Site.

4.7 Noise Control Equipment

The following noise mitigation measures have been incorporated into the operation of the Site to minimize the noise impacts at the receptors.

- The Komatsu D475 track dozer is limited to daytime periods only at the stockpiles. During the nighttime, other track dozer models can be used at these stockpiles.
- Emergency generators and fire pumps are tested during the daytime periods only.

5. LAND USE ZONING PLAN & POINTS OF RECEPTION

5.1 Scaled Area Location Plan

Refer to Figure A1 in Appendix A for a scaled area plan that shows the Site and the property boundaries. Refer to Figure A2 for the location of the PORs and Figure A3 for a site plan identifying the location of the significant noise sources.

5.2 Land Use Zoning Plan

Parcels of land owned by New Gold and consisting of the mine footprint have been rezoned 'RU – Rural' and 'M1 – Industrial' to 'MM – Mineral Mining'. The mine footprint also consists of parcels that are owned by the Crown. The remaining properties surrounding the Site are zoned as 'RU – Rural' with a few parcels zoned as 'M1 – Industrial'.

All developed and vacant properties assessed as PORs are zoned as 'RU – Rural'.

Refer to Figure A4 in Appendix A for the zoning map from the Township of Chapple Zoning By-Law. The zoning keys have been provided in Appendix A as Attachment A1.

5.3 Points of Reception

Consistent with the previous AAR, a total of twenty-two (22) sensitive points of reception (POR) were identified as the basis for the acoustic assessment and include 15 existing dwellings and 7 vacant lots.

As noted in the previous AAR, the properties that were initially assessed as PORs 5, 13 18 and 26 were acquired by New Gold; therefore, per NPC-300, these properties are now not considered to be PORs.

5.3.1 Properties with Existing Dwellings

Each of the existing dwelling was assumed to be a two-storey building. The following reception points were identified in the model for each dwelling:

An outdoor POR at a height of 1.5 m to represent a backyard, a front yard or other outdoor living area. The outdoor POR was placed within 30 m of the façade of the building, per NPC-300;

A plane-of-window POR at a height of 1.5 m to represent the 1st storey window of the dwelling; and

A plane-of-window POR at a height of 4.5 m to represent the 2nd storey window of the dwelling.

A brief summary of the existing PORs is provided below. As the Site covers a wide area with noise sources located throughout the Site, the location is provided below with respect to the Mill Building.

- POR1 is located on the west side of Marrs Road, approximately 1,300 m north of the intersection of Marrs Road and Richardson Road. POR1 is approximately 4,880 m northwest of the Mill Building.

- POR2 is located at the northern end of Gallinger Road and is approximately 4,760 m northeast of the Mill Building. POR2 is approximately 4,750 m northeast of the Mill Building.

- POR3 is located approximately 170 north of Korpi Road and approximately 180 m east of Gallinger Road. POR3 is approximately 4,950 m northeast of the Mill Building.

- POR4 is located approximately 35 m south of Korpi Road and approximately 300 m east of Gallinger Road. POR4 is approximately 4,840 m east-northeast of the Mill Building.

- POR7 is located approximately 40 m east of Heatwole Road and approximately 220 m north of Highway 600. POR7 is located approximately 5,940 m southeast of the Mill Building.

- POR8 is located approximately 40 m north of Highway 600 and approximately 900 m west of Heatwole Road. POR8 is located 5,480 m southeast of the Mill Building.

- POR9 is located approximately 150 m south of Highway 600 and approximately 1,230 m west of Heatwole Road. POR9 is approximately 5,410 m southeast of the Mill Building.

- POR10 is located approximately 50 m south of Highway 600 and approximately 1,320 m east of Barwick Road. POR10 is approximately 4,960 m southeast of the Mill Building.

- POR11 is located approximately 70 m south of Highway 400 and approximately 900 m east of Barwick Road. POR11 is approximately 4,690 m southeast of the Mill Building

- POR12 is located approximately 230 m north of Highway 600 and approximately 500 m east of Barwick Road. POR12 is approximately 4,610 m southeast of the Mill Building.

- POR14 is approximately 70 m north of the new segment of Highway 600 (formerly Tait Road) and approximately 210 m west of Old Highway 600. POR14 is approximately 4.060 south-southeast of the Mill Building

- POR15 is approximately100 m southwest of the intersection of new segment of Highway 600 (formerly Pine River Road) and the Old Highway 600. POR15 is approximately 700 m west-southwest of the Mill Building.

- POR16 is approximately 66 m northwest of the intersection of new segment of Highway 600 (formerly Pine River Road) and the Old Highway 600. POR16 is approximately 6.970 m west-southwest of Highway 600.

- POR17 is approximately 250 m northeast from Highway 600 at the location where the Highway bends from a north-south run to an east-west run, approximately 1,740 m north of Jewett Road and approximately 1,650 m east of Split Road. POR17 is approximately 7,220 m northwest of the Mill Building.

5.3.2 Vacant Properties

A brief summary of the vacant properties assessed as PORs is provided below. The vacant properties were assessed with a single reception point at a height of 4.5 m, per NPC-300. The location of the these PORs are consistent with the previous AAR and are generally 60 m from the nearest road. As the Site covers a wide area with noise sources located throughout the Site, the location is provided below with respect to the Mill Building.

- POR19 is located on the north side of Neilson Road, approximately 3,070 m west of the new segment of Highway 600 and 3,390 m east of Highway 617. POR1 is approximately 11,110 m southeast of the Mill Building.

- POR20 is located on the south side of the new segment of Highway 400 (formerly Tait Road), approximately 750 m west of McMillan Road and approximately 900 m east of Sheppard road. and is approximately 4,250 m southwest of the Mill Building.

- POR21 is located on the south side of Teeple Road, approximately 1,530 west of Heatwole Road and approximately 1,810 east of the Old Highway 600. POR21 is approximately 3,810 m t of the Mill southeast of the Mill Building.

- POR22 is located on the north side of Highway 600, approximately 900 m east of Barwick Road. POR22 is approximately 4,610 m southeast of the Mill Building.

- POR23 is located approximately 50 m west of Sheppard Road and 60 m north of the new segment of Highway 600. POR23 is approximately 4,530 m southwest of the Mill Building.

- POR24 is located on the south side of the new segment of Highway 400 (formerly Tait Road), approximately 840 m west of McMillan Road and approximately 800 m east of Sheppard road. POR24 is approximately 4,280 southwest of the Mill Building.

- POR25 is located approximately 50 m east of McMillan Road and approximately 60 m south of Highway 600. POR25 is located approximately 4,130 m south of the Mill Building.

6. NOISE IMPACT ANALYSIS & ACOUSTIC ASSESSMENT SUMMARY

6.1 Procedure Used to Assess Noise Impacts at Each POR

Sound pressure level readings were taken at a measured distance from each source according to procedures outlined in MECP Publication NPC-103. Sound power levels were used as input to the acoustic computer model Cadna-A (Computer Aided Noise Abatement, Version 4.6). The model is based on ISO Standard 9613-2 "*Acoustics – Attenuation of Sound During Propagation Outdoors*". The ISO based model accounts for reduction in sound level due to increased distance and geometrical spreading, air absorption, ground attenuation, and acoustical shielding by intervening structures, topography and brush. The model is considered conservative since it represents atmospheric conditions that promote propagation of sound from source to receiver. Refer to Appendix D for the summary calculations and Appendix E for the Cadna-A model set-up data and output data.

6.2 List of Parameters and Assumption Used in Calculations and Model

The following assumptions were used in the calculations:

- Terrain contours were included as there is significant topographical variation within the Site and between the Site and the receptors.
- Point sources (exhausts, stacks, fans) assumed Q=2.
- Tonal sources were increased by 5 dB per NPC-104 (where applicable).
- Sources were adjusted for intermittence per NPC-104 (where applicable).
- Truck traffic on-site modelled using a moving point source in the Cadna-A software (not STAMSON) due to infrequent movements.
- Lateral diffraction and second order reflection included in the model.
- Ground absorption set to 0.0 for reflective ground surfaces and 1.0 for absorptive ground cover.
- Model set to no subtraction of negative ground attenuation.
- Model set to no negative path difference.

6.3 Rationale for Selecting Applicable Limits

The Site is located in a "Class 3" Rural Area, which is defined in NPC-300 (October, 2013) as:

> *"a rural area with an acoustical environment that is dominated by natural sounds having little or no road traffic, such as:*
> - *a small community;*
> - *an agricultural area;*
> - *a rural recreational area such as a cottage or a resort area; or*
> - *a wilderness area."*

For steady and varying sound, NPC-300 specifies the sound level limit at a sensitive POR in terms of one-hour equivalent sound level (Leq). The sound level limit at the POR due to the operation of stationary sources is the greater of the following:

1. Exclusionary minima values specified in NPC-300; or
2. The lowest background sound level occurring at the sensitive point of reception occurring at the same time of day that the equipment is operating.

The MECP exclusionary limit values were selected as the sound level limits for the PORs. Table 6-1 summarizes daytime, evening and nighttime sound level limits used in this assessment at the identified PORs for steady sources.

Table 6-1. Summary of Sound Level Limits (L_{eq}) for Steady Sources

PORs	Daytime (0700 to 1900) Criteria (dBA)			Evening (1900 to 2300) Criteria (dBA)			Nighttime (2300 to 0700) Criteria (dBA)		
	MECP Exclusionary Limit	Minimum Background Level	Criteria Used in Assessment	MECP Exclusionary Limit	Minimum Background Level	Criteria sed in Assessment	MECP Exclusionary Limit	Minimum Background Level	Criteria Used in Assessment
Outdoor PORs	45	N/A [a]	45	40	N/A [a]	40	N/A [b]	N/A [a]	N/A [b]
Plane of Window PORs	45	N/A [a]	45	40	N/A [a]	40	40	N/A [a]	40

a. Background noise level not calculated or measured.
b. Outdoor PORs do not have nighttime performance limits.

For emergency equipment operating in non-emergency situations, such as testing or maintenance, the sound levels limits at the PORs from this equipment are 5 dB greater than the sound level limits otherwise applicable at the PORs from stationary sources. Per NPC-300, the sound level impacts from this emergency equipment operating during non-emergency situations are assessed independently of all other stationary sources of noise. The sound level limits applicable at the PORs from this emergency equipment operating in non-emergency situations are summarized in Table 6-2.

Table 6-2. Summary of Sound Level Limits (L_{eq}) for Emergency Sources

PORs	Daytime (0700 to 1900) Criteria (dBA)			Evening (1900 to 2300) Criteria (dBA)			Nighttime (2300 to 0700) Criteria (dBA)		
	MECP Exclusionary Limit	Adjustment for Emerg. Equipment	Criteria Used in Assessment	MECP Exclusionary Limit	Adjustment for Emerg. Equipment	Criteria sed in Assessment	MECP Exclusionary Limit	Adjustment for Emerg. Equipment	Criteria Used in Assessment
Outdoor PORs	45	+ 5	50	N/A [b]	N/A [b]	N/A [b]	N/A [b]	N/A [b]	N/A [b]
Plane of Window PORs	45	+ 5	50	N/A [b]	N/A [b]	N/A [b]	N/A [b]	N/A [b]	N/A [b]

a. Background noise level not calculated or measured.
b. Non-emergency operation of emergency equipment does occur during evening and nighttime periods.

6.4 Predictable Worst-Case Impact Operating Scenario

The Site can operate 24 hours a day, 365 days a year. The worst-case one-hour operating scenarios that were assessed for daytime, evening and nighttime periods are summarized in Table 4-1.

6.5 Point of Reception Noise Impact Summary

Tables 8-2 and 8-3 summarize the noise impacts of the Site at the identified sensitive receptors for steady noise sources and non-emergency operation of emergency equipment, respectively. Specifically, this table lists the distance from each noise source to each POR, and the sound pressure level generated by each noise source at each receptor based on the Cadna-A computer model output.

The model includes 22 PORs, including 15 existing dwellings and 7 vacant properties. As previously mentioned, the existing dwellings were considered to be two-storey houses and three reception points (an

outdoor reception point, a 1st storey reception point and a 2nd storey reception point) were assessed at each of these existing dwellings. The model therefore assesses a total of 52 reception points.

Consistent with the previous AARs, the maximum impacts at the existing dwellings occurs at the 2nd storey reception point. Therefore, for the existing dwellings, the noise impacts at the 2nd storey reception point have been the only reception point included in the POR noise impact summary table.

6.6 Acoustic Assessment Summary

Table 8-4 in Section 8 provides a summary of the noise impacts from the steady noise sources at the identified sensitive PORs for worst-case daytime, evening and nighttime operating scenarios. Table 8-5 in Section 8 provides a summary of the noise impacts at the PORs from the non-emergency operation of the emergency equipment.

As mentioned previously for the POR impact summary table, for the existing dwellings, the noise impacts at the 2nd storey reception point have been the only reception point included in the Acoustic Assessment Summary Table provided as Tables 8-4 and 8-5.

Refer to Figures 8-1 and 8-2 in Section 8 for contour plots showing the cumulative impacts at the PORs from the steady sound levels from the Site. These figures illustrate the steady sound levels generated by the Site's noise sources during the worst-case daytime operating scenario (Figure 8-1) and evening and nighttime operating scenario (Figure 8-2).

Refer to Figure 8-3 for contour plots showing the impacts at the PORs from the non-emergency operation of the emergency equipment at the Site.

7. CONCLUSIONS

Based on the results of the acoustic assessment, it can be concluded that the noise impacts at the sensitive points of reception are below the applicable sound level limits during the worst-case daytime, evening and nighttime periods. Based on a review of the Site's operation, a vibration assessment is not warranted.

8. SUPPORTING SUMMARY TABLES & FIGURES

New Gold Inc. - Rainy River Mine
Acoustic Assessment Report (April 2021 Update)

Table 8-1: Equipment Summary

New sources added or modified as part of this updated AAR are higlighted in green.

AAR ID	Description	Sound Power Level (dBA)	Data Source	Sound Characteristics	Noise Control Measures
AC1	WMP Air Compressor 1	99.0	Manufacturer Data [Note 1a]	Steady	Uncontrolled
AC2	WMP Air Compressor 2	99.0	Manufacturer Data [Note 1a]	Steady	Uncontrolled
AC3	WMP Air Compressor 3	99.0	Manufacturer Data [Note 1a]	Steady	Uncontrolled
AC4	WMP Air Compressor 4	99.0	Manufacturer Data [Note 1a]	Steady	Uncontrolled
BD1	Blast Hole Drill 1 - Sandvik DP1500i	116.8	Measured [Note 1b]	Steady	Uncontrolled
BD2	Blast Hole Drill 2- Sandvik D75KS	116.8	Assumed to be similar to Sandvik DP1500i	Steady	Uncontrolled
BD3	Blast Hole Drill 3- Sandvik D75KS	116.8	Assumed to be similar to Sandvik DP1500i	Steady	Uncontrolled
BD4	Blast Hole Drill 4- Sandvik D75KS	116.8	Assumed to be similar to Sandvik DP1500i	Steady	Uncontrolled
BD5	Blast Hole Drill 5- Sandvik D75KS	116.8	Assumed to be similar to Sandvik DP1500i	Steady	Uncontrolled
C	Crusher	110.7	Measured [Note 1b]	Steady	Uncontrolled
DC1	Dust Collector 1	104.7	Measured [Note 1b]	Steady	Uncontrolled
DC2	Dust Collector 2	104.7	Measured [Note 1b]	Steady	Uncontrolled
E1	Komatsu Diesel Excavator PC5500	115.5	Measured [Note 1b]	Steady	Uncontrolled
E2	Komatsu Diesel Excavator PC5500	115.5	Measured [Note 1b]	Steady	Uncontrolled
E3	Komatsu Diesel Excavator PC8000	120.9	Measured [Note 1b]	Steady	Uncontrolled
E4	Komatsu Diesel Excavator PC3000	124.6	Measured [Note 1b]	Steady, Tonal	Uncontrolled
E5	Komatsu Diesel Excavator PC800LC	112.4	Measured [Note 1b]	Steady	Uncontrolled
E6	Komatsu Diesel Excavator PC360LC	116.2	Measured [Note 1b]	Steady	Uncontrolled
E7	Komatsu Diesel Excavator PC360LC	116.2	Measured [Note 1b]	Steady	Uncontrolled
E8	Komatsu Diesel Excavator PC360LC	116.2	Measured [Note 1b]	Steady	Uncontrolled
E9	Komatsu Diesel Excavator PC360LC	116.2	Measured [Note 1b]	Steady	Uncontrolled
E10	Komatsu Diesel Excavator PC360LC	116.2	Measured [Note 1b]	Steady	Uncontrolled
E11	Komatsu Diesel Excavator PC360LC	116.2	Measured [Note 1b]	Steady	Uncontrolled
E12	Komatsu Diesel Excavator PC360LC	116.2	Measured [Note 1b]	Steady	Uncontrolled
E13	Komatsu Diesel Excavator PC360LC	116.2	Measured [Note 1b]	Steady	Uncontrolled
E14	Komatsu Diesel Excavator PC360LC	116.2	Measured [Note 1b]	Steady	Uncontrolled
E15	Komatsu Diesel Excavator PC360LC	116.2	Measured [Note 1b]	Steady	Uncontrolled
E16	Komatsu Diesel Excavator PC360LC	116.2	Measured [Note 1b]	Steady	Uncontrolled
E17	Komatsu Diesel Excavator PC360LC	116.2	Measured [Note 1b]	Steady	Uncontrolled
E18	Komatsu Diesel Excavator PC360LC	116.2	Measured [Note 1b]	Steady	Uncontrolled
EO_PC	EO Portable Plant - Elrus 3054 Jaw Crusher	117.6	Measured [Note 1c]	Steady	Uncontrolled
EO_SCNR	EO Portable Plant - Terex 380 MVP Cone and Screener	122.2	Measured [Note 1c]	Steady	Uncontrolled
EO_GENSET	EO Portable Plant - Genset	123.9	Measured [Note 1c]	Steady	Uncontrolled
EO_FEL	EO Portable Plant - Wheel Loader (Doolan DL420)	119.1	Measured [Note 1c]	Steady	Uncontrolled
MBPA_PC	Portable Plant - Powerscreen Premiertrak 600 Jaw Crusher	118.9	Measured [Note 1b]	Steady	Uncontrolled
MBPA_GENSET	Portable Plant - CAT C13 Genset	118.4	Manufacturer Data	Steady	Uncontrolled
MB_W-E	Mill Building - Wall - East	103.6	Measured [Note 1c]	Steady	Uncontrolled
MB_W-N	Mill Building - Wall - North	101.7	Measured [Note 1c]	Steady	Uncontrolled
MB_BD-E	Mill Building - Bay Door - West	111.2	Measured [Note 1c]	Steady	Uncontrolled
RD1	RC Drill Sandvik DR580	119.2	Measured [Note 1b]	Steady	Uncontrolled
RD2	RC Drill Sandvik DR580	119.2	Measured [Note 1b]	Steady	Uncontrolled
RD3	RC Drill Sandvik DR560	119.2	Assumed to be similar to Sandvik DR580	Steady	Uncontrolled
T1	Transformer 1	113.4	Measured [Note 1b]	Steady, Tonal	Uncontrolled
T2	Transformer 2	113.4	Measured [Note 1b]	Steady, Tonal	Uncontrolled
TD01	Track Dozer 01 (Pit - Komatsu D475)	121.2	Measured [Note 1b]	Steady, Tonal	Uncontrolled
TD02	Track Dozer 02 (Pit -CAT D10)	120.0	Measured [Note 1b]	Steady, Tonal	Uncontrolled
TD03	Track Dozer 03 (Pit -CAT D10)	120.0	Measured [Note 1b]	Steady, Tonal	Uncontrolled
TD04	Track Dozer 04 (Pit -CAT D10)	120.0	Measured [Note 1b]	Steady, Tonal	Uncontrolled
TD05	Track Dozer 05 (PAG - Komatsu D375)	109.1	Measured [Note 1b]	Steady	Uncontrolled
TD06	Track Dozer 06 (PAG - Komatsu D375)	109.1	Measured [Note 1b]	Steady	Uncontrolled
TD07D	Track Dozer 07 (PAG - Komatsu D475)	121.2	Measured [Note 1b]	Steady, Tonal	Uncontrolled
TD07N	Track Dozer 07 (PAG - CAT D10)	115.0	Measured [Note 1b]	Steady	Uncontrolled
TD08D	Track Dozer 08 (PAG - Komatsu D475)	121.2	Measured [Note 1b]	Steady, Tonal	Uncontrolled
TD08N	Track Dozer 08 (PAG - CAT D10)	115.0	Measured [Note 1b]	Steady	Uncontrolled
TD09	Track Dozer 09 (Ore -CAT D9)	109.9	Measured [Note 1b]	Steady	Uncontrolled
TD10	Track Dozer 10 (Ore -CAT D8)	106.9	Measured [Note 1b]	Steady	Uncontrolled
TD11D	Track Dozer 11 (NPAG/OB - Komatsu D475)	121.2	Measured [Note 1b]	Steady, Tonal	Uncontrolled
TD11N	Track Dozer 11 (NPAG/OB - CAT D10)	115.0	Measured [Note 1b]	Steady	Uncontrolled
TD12D	Track Dozer 12 (NPAG/OB - Komatsu D475)	121.2	Measured [Note 1b]	Steady, Tonal	Uncontrolled
TD12N	Track Dozer 11 (NPAG/OB - CAT D10)	115.0	Measured [Note 1b]	Steady	Uncontrolled
TD13	Track Dozer 13 (NPAG/OB -CAT D9)	109.9	Measured [Note 1b]	Steady	Uncontrolled
TD14	Track Dozer 14 (NPAG/OB -CAT D9)	109.9	Measured [Note 1b]	Steady	Uncontrolled
TD15	Track Dozer 15 (NPAG/OB -CAT D9)	109.9	Measured [Note 1b]	Steady	Uncontrolled
TD16	Track Dozer 16 (NPAG/OB -CAT D9)	109.9	Measured [Note 1b]	Steady	Uncontrolled
TD17	Track Dozer 17 (TMA -CAT D9)	109.9	Measured [Note 1b]	Steady	Uncontrolled
TD18	Track Dozer 18 (TMA -CAT D9)	109.9	Measured [Note 1b]	Steady	Uncontrolled

Table 8-1: Equipment Summary

New sources added or modified as part of this updated AAR are higlighted in green.

AAR ID	Description	Sound Power Level (dBA)	Data Source	Sound Characteristics	Noise Control Measures
TD19	Track Dozer 19 (TMA -CAT D9)	109.9	Measured [Note 1b]	Steady	Uncontrolled
TD20	Track Dozer 20 (TMA -CAT D9)	109.9	Measured [Note 1b]	Steady	Uncontrolled
TD21	Track Dozer 21 (TMA -CAT D9)	109.9	Measured [Note 1b]	Steady	Uncontrolled
TD22	Track Dozer 22 (TMA -CAT D9)	109.9	Measured [Note 1b]	Steady	Uncontrolled
TD23	Track Dozer 23 (TMA -CAT D9)	109.9	Measured [Note 1b]	Steady	Uncontrolled
TD24	Track Dozer 24 (TMA -CAT D9)	109.9	Measured [Note 1b]	Steady	Uncontrolled
TD25	Track Dozer 25 (TMA -CAT D9)	109.9	Measured [Note 1b]	Steady	Uncontrolled
TD26	Track Dozer 26 (TMA -CAT D9)	109.9	Measured [Note 1b]	Steady	Uncontrolled
TD27	Track Dozer 27 (TMA -CAT D9)	109.9	Measured [Note 1b]	Steady	Uncontrolled
WD	Komatsu Wheel Dozer WD900	115.3	Estimated [Note 1e]	Steady	Uncontrolled
WL1	Komatsu Wheel Loader WA1200	116.3	Measured [Note 1b]	Steady	Uncontrolled
WL2	CAT 994HL	113.3	Assumed to be similar to Komatsu WA1200	Steady	Uncontrolled
WL3	CAT 980H Wheel Loader	114.2	Measured [Note 1b]	Steady	Uncontrolled
WL4	CAT 980H Wheel Loader	114.2	Measured [Note 1b]	Steady	Uncontrolled
WL5	CAT 980H Wheel Loader	114.2	Measured [Note 1b]	Steady	Uncontrolled
WL6	CAT 980H Wheel Loader	114.2	Measured [Note 1b]	Steady	Uncontrolled
WP01	Water Pump WP01	106.1	Measured [Note 1b]	Steady	Uncontrolled
WP02	Water Pump WP02	106.1	Measured [Note 1b]	Steady	Uncontrolled
WP03	Water Pump WP03	106.1	Measured [Note 1b]	Steady	Uncontrolled
WP04	Water Pump WP04	106.1	Measured [Note 1b]	Steady	Uncontrolled
WP05	Water Pump WP05	106.1	Measured [Note 1b]	Steady	Uncontrolled
WP06	Water Pump WP06	106.1	Measured [Note 1b]	Steady	Uncontrolled
WP07	Water Pump WP07	106.1	Measured [Note 1b]	Steady	Uncontrolled
WP08	Water Pump WP08	106.1	Measured [Note 1b]	Steady	Uncontrolled
WP09	Water Pump WP09	106.1	Measured [Note 1b]	Steady	Uncontrolled
WP10	Water Pump WP10	106.1	Measured [Note 1b]	Steady	Uncontrolled
WP11	Water Pump WP11	106.1	Measured [Note 1b]	Steady	Uncontrolled
WP12	Water Pump WP12	106.1	Measured [Note 1b]	Steady	Uncontrolled
WP13	Water Pump WP13	106.1	Measured [Note 1b]	Steady	Uncontrolled
WP14	Water Pump WP14	106.1	Measured [Note 1b]	Steady	Uncontrolled
WP15	Water Pump WP15	106.1	Measured [Note 1b]	Steady	Uncontrolled
WP16	Water Pump WP16	106.1	Measured [Note 1b]	Steady	Uncontrolled
WP17	Water Pump WP17	106.1	Measured [Note 1b]	Steady	Uncontrolled
WP18	Water Pump WP18	106.1	Measured [Note 1b]	Steady	Uncontrolled
WP19	Water Pump WP19	106.1	Measured [Note 1b]	Steady	Uncontrolled
WS	Wet Scrubber	105.0	Manufacturer Data [Note 1a]	Steady	Uncontrolled
MGR_OPMill	Motor Grader Route Open Pit to Mill	110.9	Measured [Note 1b]	Steady	Uncontrolled
MGR_SP	Motor Grader Route Stockpile	110.9	Measured [Note 1b]	Steady	Uncontrolled
MGR_PAG	Motor Grader Route PAG	110.9	Measured [Note 1b]	Steady	Uncontrolled
MGR_NPAG	Motor Grader Route NPAG	110.9	Measured [Note 1b]	Steady	Uncontrolled
MGR_OB	Motor Grader Route OB	110.9	Measured [Note 1b]	Steady	Uncontrolled
TRE_OP-Mill	Truck Route Open Pit to Mill (Empty Truck)	110.0	Measured [Note 1b]	Steady	Uncontrolled
TRE_OP-LGO	Truck Route Open Pit to LGO (Empty Truck)	110.0	Measured [Note 1b]	Steady	Uncontrolled
TRE_OP-PAG	Truck Route Open Pit to PAG (Empty Truck)	110.0	Measured [Note 1b]	Steady	Uncontrolled
TRE_OP-NPAG	Truck Route Open Pit to NPAG (Empty Truck)	110.0	Measured [Note 1b]	Steady	Uncontrolled
TRE_OP-OB	Truck Route Open Pit to Overburden (Empty Truck)	110.0	Measured [Note 1b]	Steady	Uncontrolled
TRE_OP-TMA	Truck Route Open Pit to TMA Staging Area (Empty Truck)	110.0	Measured [Note 1b]	Steady	Uncontrolled
TRE_TMA1	Truck Route TMA Staging Area to TMA Dam (Empty Truck)	106.6	Measured [Note 1b]	Steady	Uncontrolled
TRE_TMA2	Truck Route TMA Staging Area to TMA Dam (Empty Truck)	106.6	Measured [Note 1b]	Steady	Uncontrolled
TRL_OP-Mill	Truck Route Open Pit to Mill (Loaded Truck)	121.0	Measured [Note 1b]	Steady	Uncontrolled
TRL_OP-LGO	Truck Route Open Pit to LGO (Loaded Truck)	121.0	Measured [Note 1b]	Steady	Uncontrolled
TRL_OP-PAG	Truck Route Open Pit to PAG (Loaded Truck)	121.0	Measured [Note 1b]	Steady	Uncontrolled
TRL_OP-NPAG	Truck Route Open Pit to NPAG (Loaded Truck)	121.0	Measured [Note 1b]	Steady	Uncontrolled
TRL_OP-OB	Truck Route Open Pit to Overburden (Loaded Truck)	121.0	Measured [Note 1b]	Steady	Uncontrolled
TRL_OP-TMA	Truck Route Open Pit to TMA Staging Area (Loaded Truck)	121.0	Measured [Note 1b]	Steady	Uncontrolled
TRL_TMA1	Truck Route TMA Staging Area to TMA Dam	106.6	Measured [Note 1b]	Steady	Uncontrolled
TRL_TMA2	Truck Route TMA Staging Area to TMA Dam	106.6	Measured [Note 1b]	Steady	Uncontrolled
WTR_OPMill	Water Truck Route Open Pit to Mill	113.0	Measured [Note 1b]	Steady	Uncontrolled
WTR_SP	Water Truck Route Stockpile	113.0	Measured [Note 1b]	Steady	Uncontrolled
WTR_PAG	Water Truck Route PAG	113.0	Measured [Note 1b]	Steady	Uncontrolled
WTR_NPAG	Water Truck Route NPAG	113.0	Measured [Note 1b]	Steady	Uncontrolled
WTR_OB	Water Truck Route OB	113.0	Measured [Note 1b]	Steady	Uncontrolled
EG1	Emergency Generator 1 (CAT 2.5 MW)	128.8	Manufacturer Data [Note 1a]	Steady	Uncontrolled
EG2	Emergency Generator 2 (CAT 2.5 MW)	128.8	Manufacturer Data [Note 1a]	Steady	Uncontrolled
FP1	Fire Pump 1	137.0	Manufacturer Data [Note 1d]	Steady	Uncontrolled
FP2	Fire Pump 2	137.0	Manufacturer Data [Note 1d]	Steady	Uncontrolled

Table 8-1: Equipment Summary

Notes

1a: Sound level estimated using manufacturer data as identified in previous AARs

1b: Measured sound levels of an equipment having same model. As measured in previous AARs

1c: Measured by Trinity and/or New Gold

1d: Sound level estimated using manufacturer data as identified in previous AARs. Spectrum corrections of similar equipment applied to overall PWL from manufacturer to obtain sound level in octave bands.

1e: Sound level estimated using data referenced in other reports.

Table 8-2: Point of Reception Impact Summary- Steady Sources

New sources added or modified as part of this updated AAR are higlighted in green.

AAR ID	Description	POR1			POR2			POR3			POR4			POR6			POR7			POR8			POR9			POR10			POR11			POR12		
		Distance	Leq [D]	Leq [E/N]	Distance	Leq [D]	Leq [E/N]	Distance	Leq [D]	Leq [E/N]	Distance	Leq [D]	Leq [E/N]	Distance	Leq [D]	Leq [E/N]	Distance	Leq [D]	Leq [E/N]	Distance	Leq [D]	Leq [E/N]	Distance	Leq [D]	Leq [E/N]	Distance	Leq [D]	Leq [E/N]	Distance	Leq [D]	Leq [E/N]	Distance	Leq [D]	Leq [E/N]
		m	dBA	dBA	m	dBA	dBA	m	dBA	dBA	m	dBA	dBA	m	dBA	dBA	m	dBA	dBA	m	dBA	dBA	m	dBA	dBA	m	dBA	dBA	m	dBA	dBA	m	dBA	dBA
AC1	WMP Air Compressor 1	5191	1.9	1.9	10121	-1.0	-1.0	10383	-1.1	-1.1	10285	-14.4	-14.4	10245	-16.2	-16.2	10826	-16.4	-16.4	10082	-15.3	-15.3	9890	-18.0	-18.0	9248	-18.1	-18.1	8806	-15.0	-15.0	8280	-17.8	-17.8
AC2	WMP Air Compressor 2	5607	0.5	0.5	10858	-2.5	-2.5	11130	-2.6	-2.6	11035	-16.0	-16.0	11001	-18.3	-18.3	11559	-18.4	-18.4	10803	-16.9	-16.9	10603	-19.1	-19.1	9955	-19.2	-19.2	9504	-16.8	-16.8	8980	-18.8	-18.8
AC3	WMP Air Compressor 3	5323	1.2	1.2	11091	-1.5	-1.5	11409	-1.6	-1.6	11329	-16.4	-16.4	11482	-18.9	-18.9	12128	-19.1	-19.1	11399	-17.4	-17.4	11215	-19.8	-19.8	10578	-19.9	-19.9	10141	-17.1	-17.1	9614	-19.6	-19.6
AC4	WMP Air Compressor 4	4679	8.3	8.3	9951	0.9	0.9	10250	0.8	0.8	10164	-8.7	-8.7	10293	-15.8	-15.8	10964	-15.9	-15.9	10251	-14.4	-14.4	10077	-17.7	-17.7	9450	-17.7	-17.7	9025	-14.2	-14.2	8497	-17.4	-17.4
BD1	Blast Hole Drill 1 - Sandvik DP1500i	5978	-3.9	-3.9	6524	-4.6	-4.6	6545	-4.6	-4.6	6384	-7.4	-7.4	5710	-8.0	-8.0	6220	-8.0	-8.0	5501	-7.3	-7.3	5336	-8.0	-8.0	4727	-8.0	-8.0	4336	-7.1	-7.1	3810	-7.9	-7.9
BD2	Blast Hole Drill 2- Sandvik D75KS	5981	-3.8	-3.8	6510	-4.5	-4.5	6530	-4.5	-4.5	6369	-7.9	-7.9	5694	-8.5	-8.5	6206	-8.5	-8.5	5487	-7.9	-7.9	5323	-8.6	-8.6	4715	-8.6	-8.6	4324	-7.7	-7.7	3799	-8.4	-8.4
BD3	Blast Hole Drill 3- Sandvik D75KS	6011	-10.0	-10.0	6541	-10.9	-10.9	6559	-10.9	-10.9	6397	-11.9	-11.9	5706	-12.8	-12.8	6208	-12.9	-12.9	5485	-12.3	-12.3	5319	-13.4	-13.4	4708	-13.4	-13.4	4314	-11.9	-11.9	3788	-13.1	-13.1
BD4	Blast Hole Drill 4- Sandvik D75KS	6003	-2.1	-2.1	6510	-2.8	-2.8	6528	-2.8	-2.8	6366	-6.5	-6.5	5681	-7.2	-7.2	6188	-7.1	-7.1	5468	-6.2	-6.2	5303	-6.9	-6.9	4694	-6.9	-6.9	4302	-5.8	-5.8	3777	-6.6	-6.6
BD5	Blast Hole Drill 5- Sandvik D75KS	5885	-5.7	-5.7	6452	-6.7	-6.7	6482	-6.8	-6.8	6324	-12.5	-12.5	5697	-13.5	-13.5	6238	-13.6	-13.6	5529	-12.3	-12.3	5370	-13.4	-13.4	4767	-13.4	-13.4	4383	-11.8	-11.8	3859	-13.6	-13.6
C	Crusher	5783	13.4	13.4	5066	11.3	11.3	5091	11.2	11.2	4934	15.2	15.2	4572	13.0	13.0	5410	12.8	12.8	4846	14.8	14.8	4772	12.4	12.4	4280	12.3	12.3	4022	15.3	15.3	3550	12.9	12.9
DC1	Dust Collector 1	5746	9.6	9.6	5042	5.0	5.0	5072	4.9	4.9	4917	11.3	11.3	4582	6.9	6.9	5432	6.7	6.7	4873	10.7	10.7	4801	6.2	6.2	4312	6.1	6.1	4057	11.3	11.3	3586	6.8	6.8
DC2	Dust Collector 2	5474	5.6	5.6	5098	4.7	4.7	5167	4.6	4.6	5022	6.6	6.6	4820	5.8	5.8	5703	5.6	5.6	5151	5.4	5.4	5081	4.6	4.6	4591	4.5	4.5	4332	6.0	6.0	3858	5.1	5.1
E1	Komatsu Diesel Excavator PC5500	5976	12.2	12.2	6555	11.8	11.8	6577	11.8	11.8	6416	13.0	13.0	5742	9.0	9.0	6248	9.1	9.1	5527	13.1	13.1	5361	12.6	12.6	4751	12.5	12.5	4357	13.4	13.4	3831	12.8	12.8
E2	Komatsu Diesel Excavator PC5500	6002	5.2	5.2	6437	4.9	4.9	6453	4.9	4.9	6291	-2.1	-2.1	5609	-2.4	-2.4	6127	-2.4	-2.4	5412	-1.6	-1.6	5250	-1.9	-1.9	4645	-1.9	-1.9	4259	-1.3	-1.3	3734	-1.7	-1.7
E3	Komatsu Diesel Excavator PC8000	6017	12.2	12.2	6487	11.8	11.8	6502	11.8	11.8	6340	6.6	6.6	5648	6.3	6.3	6156	6.3	6.3	5437	7.7	7.7	5272	7.2	7.2	4664	7.3	7.3	4274	8.0	8.0	3748	7.5	7.5
E4	Komatsu Diesel Excavator PC3000	6018	12.6	12.6	6395	12.3	12.3	6408	12.3	12.3	6245	5.5	5.5	5558	5.2	5.2	6079	5.2	5.2	5366	5.7	5.7	5205	5.2	5.2	4602	5.2	5.2	4218	5.9	5.9	3693	5.4	5.4
E5	Komatsu Diesel Excavator PC800LC	6055	3.0	3.0	6415	2.6	2.6	6424	2.6	2.6	6260	-4.7	-4.7	5555	-5.0	-5.0	6065	-5.0	-5.0	5348	-4.6	-4.6	5186	-4.9	-4.9	4580	-4.9	-4.9	4193	-4.6	-4.6	3669	-4.9	-4.9
E6	Komatsu Diesel Excavator PC360LC	6019	3.7	3.7	6432	3.2	3.2	6445	3.2	3.2	6283	-3.7	-3.7	5594	-4.2	-4.2	6109	-4.2	-4.2	5393	-3.3	-3.3	5231	-3.9	-3.9	4626	-3.9	-3.9	4239	-3.1	-3.1	3714	-3.8	-3.8
E7	Komatsu Diesel Excavator PC360LC	4054	21.2	21.2	7749	20.1	20.1	8004	20.0	20.0	7906	10.5	10.5	8019	9.9	9.9	8782	9.8	9.8	8121	10.0	10.0	7981	8.8	8.8	7390	8.7	8.7	7010	10.2	10.2	6485	9.0	9.0
E8	Komatsu Diesel Excavator PC360LC	3418	27.9	27.9	7159	22.4	22.4	7462	22.3	22.3	7381	11.7	11.7	7751	11.1	11.1	8657	11.0	11.0	8060	10.4	10.4	7953	9.8	9.8	7401	9.7	9.7	7062	10.5	10.5	6547	10.0	10.0
E9	Komatsu Diesel Excavator PC360LC	3658	22.5	22.5	7338	21.5	21.5	7621	21.4	21.4	7533	11.3	11.3	7802	10.7	10.7	8656	10.6	10.6	8035	10.7	10.7	7916	9.5	9.5	7350	9.4	9.4	6996	10.2	10.2	6477	9.7	9.7
E10	Komatsu Diesel Excavator PC360LC	3749	22.3	22.3	7704	21.2	21.2	7986	21.1	21.1	7898	10.6	10.6	8126	10.0	10.0	8942	9.9	9.9	8301	10.0	10.0	8171	8.8	8.8	7592	8.8	8.8	7223	10.2	10.2	6700	9.0	9.0
E11	Komatsu Diesel Excavator PC360LC	3824	26.9	26.9	8179	21.0	21.0	8467	20.9	20.9	8380	9.7	9.7	8595	9.1	9.1	9380	9.0	9.0	8723	9.1	9.1	8582	8.0	8.0	7991	7.9	7.9	7608	9.3	9.3	7083	8.1	8.1
E12	Komatsu Diesel Excavator PC360LC	3845	26.9	26.9	8518	20.9	20.9	8817	20.8	20.8	8733	9.1	9.1	8964	8.5	8.5	9741	8.4	8.4	9077	8.5	8.5	8932	7.4	7.4	8336	7.3	7.3	7947	8.7	8.7	7420	7.5	7.5
E13	Komatsu Diesel Excavator PC360LC	3917	26.7	26.7	8688	20.7	20.7	8988	20.5	20.5	8905	8.8	8.8	9125	8.3	8.3	9890	8.1	8.1	9220	8.2	8.2	9071	7.1	7.1	8471	7.1	7.1	8077	8.4	8.4	7550	7.2	7.2
E14	Komatsu Diesel Excavator PC360LC	4001	21.7	21.7	8803	20.3	20.3	9101	20.2	20.2	9016	8.6	8.6	9218	8.1	8.1	9969	7.9	7.9	9292	8.0	8.0	9140	6.9	6.9	8536	6.9	6.9	8138	8.2	8.2	7611	7.1	7.1
E15	Komatsu Diesel Excavator PC360LC	4213	21.0	21.0	9042	19.6	19.6	9332	19.5	19.5	9244	8.2	8.2	9396	7.6	7.6	10113	7.5	7.5	9422	7.6	7.6	9262	6.5	6.5	8650	6.5	6.5	8242	7.8	7.8	7714	6.7	6.7
E16	Komatsu Diesel Excavator PC360LC	4359	20.5	20.5	9210	19.1	19.1	9495	19.0	19.0	9405	7.9	7.9	9525	7.4	7.4	10221	7.3	7.3	9521	7.4	7.4	9355	6.3	6.3	8738	6.2	6.2	8324	7.5	7.5	7796	6.4	6.4
E17	Komatsu Diesel Excavator PC360LC	6064	14.7	0.0	5175	13.9	0.0	5159	13.8	0.0	4993	17.0	0.0	4448	16.3	0.0	5206	16.1	0.0	4614	16.6	0.0	4527	15.6	0.0	4019	15.6	0.0	3747	17.5	0.0	3269	16.1	0.0
E18	Komatsu Diesel Excavator PC360LC	6108	14.6	0.0	5178	13.8	0.0	5156	13.7	0.0	4988	17.0	0.0	4417	16.3	0.0	5167	16.1	0.0	4572	16.9	0.0	4484	15.7	0.0	3975	15.6	0.0	3704	17.5	0.0	3226	16.1	0.0
EO_PC	EO Portable Plant - Elrus 3054 Jaw Crusher	6830	18.6	0.0	4638	13.7	0.0	4499	13.6	0.0	4306	20.3	0.0	3439	19.3	0.0	4222	19.1	0.0	3686	20.0	0.0	3640	18.7	0.0	3205	18.7	0.0	3024	20.7	0.0	2612	19.3	0.0
EO_SCNR	EO Portable Plant - Terex 380 MVP Cone and Screener	6819	18.5	0.0	4641	13.0	0.0	4503	13.0	0.0	4311	21.5	0.0	3451	20.1	0.0	4234	19.9	0.0	3698	21.1	0.0	3652	19.4	0.0	3216	19.3	0.0	3034	21.9	0.0	2622	20.1	0.0
EO_GENSET	EO Portable Plant - Genset	6822	22.7	0.0	4634	17.3	0.0	4496	17.2	0.0	4303	25.6	0.0	3443	24.1	0.0	4228	23.9	0.0	3693	25.2	0.0	3648	23.4	0.0	3213	23.3	0.0	3032	25.9	0.0	2621	24.1	0.0
EO_FEL	EO Portable Plant - Wheel Loader (Doolan DL420)	6822	17.1	0.0	4648	15.3	0.0	4510	15.3	0.0	4317	19.4	0.0	3453	18.3	0.0	4234	18.1	0.0	3696	19.1	0.0	3649	17.6	0.0	3212	17.5	0.0	3029	19.8	0.0	2616	18.3	0.0
MBPA_PC	Portable Plant - Powerscreen Premiertrak 600 Jaw Crusher	5774	22.4	22.4	5086	18.9	18.9	5112	18.8	18.8	4956	24.1	24.1	4594	20.7	20.7	5428	20.5	20.5	4861	23.6	23.6	4786	20.0	20.0	4292	19.9	19.9	4032	24.2	24.2	3559	20.5	20.5
MBPA_GENSET	Portable Plant - CAT C13 Genset	5766	17.8	17.8	5104	13.5	13.5	5131	13.5	13.5	4975	19.5	19.5	4613	15.5	15.5	5444	15.3	15.3	4875	18.9	18.9	4799	14.8	14.8	4304	14.7	14.7	4041	19.5	19.5	3567	15.4	15.4
MB_W-E	Mill Building - Wall - East	6041	8.9	8.9	6404	6.0	6.0	6415	5.9	5.9	6251	7.1	7.1	5553	5.3	5.3	6068	5.1	5.1	5353	5.8	5.8	5191	3.9	3.9	4587	3.9	3.9	4201	5.9	5.9	3676	4.2	4.2
MB_W-N	Mill Building - Wall - North	4035	13.0	13.0	5518	9.8	9.8	5770	9.7	9.7	5678	11.4	11.4	6077	9.5	9.5	7111	9.3	9.3	6599	10.0	10.0	6540	8.0	8.0	6057	7.9	7.9	5793	10.3	10.3	5311	8.3	8.3
MB_BD-E	Mill Building - Bay Door - West	4111	10.7	10.7	5577	8.0	8.0	5818	7.9	7.9	5721	7.7	7.7	6068	6.7	6.7	7078	6.6	6.6	6555	6.3	6.3	6491	5.4	5.4	6001	5.4	5.4	5730	6.7	6.7	5245	5.8	5.8
RD1	RC Drill Sandvik DR580	6029	5.2	5.2	6366	5.1	5.1	6376	5.1	5.1	6213	-0.7	-0.7	5523	-0.9	-0.9	6046	-0.9	-0.9	5334	-0.5	-0.5	5175	-0.6	-0.6	4573	-0.6	-0.6	4191	-0.4	-0.4	3667	-0.6	-0.6
RD2	RC Drill Sandvik DR580	6041	8.2	8.2	6404	8.1	8.1	6415	8.1	8.1	6251	1.2	1.2	5553	1.1	1.1	6068	1.1	1.1	5353	1.6	1.6	5191	1.5	1.5	4587	1.5	1.5	4201	1.6	1.6	3676	1.5	1.5
RD3	RC Drill Sandvik DR560	5996	5.1	5.1	6317	5.0	5.0	6331	5.0	5.0	6168	-2.2	-2.2	5497	-2.4	-2.4	6034	-2.4	-2.4	5329	-2.5	-2.5	5173	-2.7	-2.7	4574	-2.8	-2.8	4196	-2.4	-2.4	3673	-2.7	-2.7
T1	Transformer 1	4865	20.5	20.5	4743	17.1	17.1	4910	17.1	17.1	4794	16.6	16.6	5043	16.0	16.0	6111	15.8	15.8	5639	15.5	15.5	5606	14.6	14.6	5165	14.5	14.5	4949	15.8	15.8	4497	14.9	14.9
T2	Transformer 2	4876	20.5	20.5	4747	17.1	17.1	4912	17.1	17.1	4795	16.6	16.6	5037	16.0	16.0	6102	15.8	15.8	5630	15.5	15.5	5596	14.6	14.6	5155	14.5	14.5	4938	15.8	15.8	4486	14.9	14.9
TD01	Track Dozer 01 (Pit - Komatsu D475)	6041	5.5	5.5	6388	4.7	4.7	6397	4.6	4.6	6234	-1.0	-1.0	5537	-2.0	-2.0	6054	-2.0	-2.0	5340	-1.2	-1.2	5179	-2.3	-2.3	4576	-2.3	-2.3	4191	-0.9	-0.9	3667	-2.1	-2.1
TD02	Track Dozer 02 (Pit -CAT D10)	5915	3.5	3.5	6541	2.6	2.6	6570	2.5	2.5	6411	-2.5	-2.5	5766	-3.2	-3.2	6287	-3.3	-3.3	5570	1.9	1.9	5407	1.2	1.2	4799	1.2	1.2	4408	1.8	1.8	3883	-1.2	-1.2
TD03	Track Dozer 03 (Pit -CAT D10)	5970	4.3	4.3	6470	3.5	3.5	6490	3.5	3.5	6329	-1.3	-1.3	5661	-1.9	-1.9	6181	-2.0	-2.0	5466	-1.5	-1.5	5304	-2.3	-2.3	4698	-2.3	-2.3	4310	-1.2	-1.2	3785	-2.1	-2.1
TD04	Track Dozer 04 (Pit -CAT D10)	5975	-1.9	-1.9	6375	-2.8	-2.8	6392	-2.9	-2.9	6231	-8.2	-8.2	5566	-9.0	-9.0	6099	-9.2	-9.2	5390	-8.6	-8.6	5232	-9.8	-9.8	4631	-9.9	-9.9	4249	-8.1	-8.1	3725	-9.4	-9.4
TD05	Track Dozer 05 (PAG - Komatsu D375)	6521	9.6	9.6	4226	6.4	6.4	4134	6.3	6.3	3953	12.5	12.5	3430	11.4	11.4	4405	11.2	11.2	3952	12.0	12.0	3944	10.6	10.6	3563	10.5	10.5	3427	12.7	12.7	3044	11.2	11.2
TD06	Track Dozer 06 (PAG - Komatsu D375)	7661	7.3	7.3	4404	4.3	4.3	4120	4.3	4.3	3900	16.2	16.2	2528	12.8	12.8	3283	12.6	12.6	2811	16.4	16.4	2815	12.6	12.6	2486	12.5	12.5	2434	17.2	17.2	2145	13.4	13.4
TD07D	Track Dozer 07 (PAG - Komatsu D475)	6185	21.0	0.0	4384	16.9	0.0	4349	16.8	0.0	4181	24.3	0.0	3808	23.0	0.0	4775	22.8	0.0	4300	23.9	0.0	4276	21.9	0.0	3864	21.8	0.0	3693	24.5	0.0	3280	22.5	0.0
TD07N	Track Dozer 07 (PAG - CAT D10)	6180	0.0	14.9	4399	0.0	11.0	4365	0.0	10.9	4196	0.0	18.1	3820	0.0	17.1	4784	0.0	16.8	4306	0.0	17.7	4280	0.0	16.1	3867	0.0	16.0	3694	0.0	18.4	3279	0.0	16.6
TD08D	Track Dozer 08 (PAG - Komatsu D475)	6254	21.9	0.0	4357	17.8	0.0	4311	17.7	0.0	4140	24.6	0.0	3734	23.1	0.0	4700	22.9	0.0	4228	24.0	0.0	4206	22.1	0.0	3800	22.0	0.0	3634	24.7	0.0	3226	22.6	0.0
TD08N	Track Dozer 08 (PAG - CAT D10)	6245	0.0	15.8	4366	0.0	11.9	4321	0.0	11.9	4150	0.0	18.5	3747	0.0	17.2	4711	0.0	17.0	4237	0.0	17.9	4215	0.0	16.2	3807	0.0	16.1	3640	0.0	18.6	3231	0.0	16.8
TD09	Track Dozer 09 (Ore -CAT D9)	6663	8.5	8.5	4980	2.9	2.9	4873	2.9	2.9	4686	14.3	14.3	3838	10.4	10.4	4538	10.2	10.2	3948	13.7	13.7	3869	9.7	9.7	3380	9.6	9.6	3140	14.3	14.3	2686	10.3	10.3
TD10	Track Dozer 10 (Ore -CAT D8)	6814	6.0	6.0	4192	2.4	2.4	4048	2.3	2.3	3856	14.9	14.9	3152	11.5	11.5	4104	11.2	11.2	3659	14.5	14.5	3658	10.6	10.6	3296	10.5	10.5	3183	15.3	15.3	2823	11.4	11.4
TD11D	Track Dozer 11 (NPAG/OB - Komatsu D475)	5296	27.7	0.0	8022	23.5	0.0	8166	23.4	0.0	8035	13.7	0.0	7669	12.7	0.0	8193	12.5	0.0	7450	13.5	0.0	7264	11.6	0.0	6630	11.5	0.0	6201	13.8	0.0	5673	11.9	0.0
TD11N	Track Dozer 11 (NPAG/OB - CAT D10)	4922	0.0	21.6	7923	0.0	17.6	8100	0.0	17.5	7979	0.0	8.1	7758	0.0	7.3	8358	0.0	7.2	7639	0.0	7.9	7467	0.0	6.3	6846	0.0	6.3	6431	0.0	8.2	5903	0.0	6.6
TD12D	Track Dozer 12 (NPAG/OB - Komatsu D475)	4885	22.4	0.0	6509	21.3	0.0	6655	21.2	0.0	6527	17.3	0.0	6352	16.3	0.0	7081	16.1	0.0	6430	16.1	0.0	6300	15.0	0.0	5725	14.9	0.0	5368	16.4	0.0	4850	15.3	0.0
TD12N	Track Dozer 11 (NPAG/OB - CAT D10)	4771	0.0	16.4	6476	0.0	15.5	6635	0.0	15.4	6511	0.0	11.5	6389	0.0	10.6	7143	0.0	10.5	6501	0.0	10.3	6376	0.0	9.5	5807	0.0	9.4	5455	0.0	10.6	4938	0.0	9.8
TD13	Track Dozer 13 (NPAG/OB -CAT D9)	5798	11.9	11.9	7961	7.8	7.8	8052	7.7	7.7	7907	0.9	0.9	7332	0.0	0.0	7757	-0.2	-0.2	6986	0.7	0.7	6784	-1.0	-1.0	6137	-1.0	-1.0	5693	1.2	1.2	5167	-0.7	-0.7
TD14	Track Dozer 14 (NPAG/OB -CAT D9)	5905	8.9	8.9	7666	5.0	5.0	7734	4.9	4.9	7583	0.3	0.3	6946	-1.4	-1.4	7363	-1.5	-1.5	6594	0.2	0.2	6394	-2.3	-2.3	5750	-2.4	-2.4	5310	0.7	0.7	4783	-1.9	-1.9
TD15	Track Dozer 15 (NPAG/OB -CAT D9)	5043	8.5	8.5	6595	7.5	7.5	6725	7.4	7.4	6593	4.0	4.0	6340	3.1	3.1	7029	2.9	2.9	6361	2.8	2.8	6223	1.9	1.9	5639	1.8	1.8	5273	3.2	3.2	4751	2.3	2.3
TD16	Track Dozer 16 (NPAG/OB -CAT D9)	5145	13.8	13.8	7794	9.8	9.8	7944	9.7	9.7	7816	1.3	1.3	7500	0.4	0.4	8063	0.2	0.2	7335	0.9	0.9	7158	-0.7	-0.7	6532	-0.8	-0.8	6114	1.2	1.2	5585	-0.5	-0.5
TD17	Track Dozer 17 (TMA -CAT D9)	4130	12.4	0.0	7766	11.0	0.0	8014	10.9	0.0	7915	0.9	0.0	7999	0.2	0.0	8748	0.0	0.0	8082	0.4	0.0	7939	-1.1	0.0	7345	-1.2	0.0	6962	0.6	0.0	6436	-0.9	0.0
TD18	Track Dozer 18 (TMA -CAT D9)	3360	19.7	19.7	7128	16.3	16.3	7436	16.1	16.1	7357	2.3	2.3	7751	1.6	1.6	8668	1.5	1.5	8076	0.8	0.8	7972	0.1	0.1	7423	0.0	0.0	7088	1.0	1.0	6574	0.3	0.3
TD19	Track Dozer 19 (TMA -CAT D9)	3602	18.9	18.9	7292	15.3	15.3	7580	15.2	15.2	7494	1.9	1.9	7785	1.2	1.2	8652	1.1	1.1	8037	1.2	1.2	7920	-0.2	-0.2	7358	-0.3	-0.3	7007	0.7	0.7	6489	-0.1	-0.1
TD20	Track Dozer 20 (TMA -CAT D9)	3703	25.7	25.7	7817	19.7	19.7	8105	19.6	19.6	8019	8.1	8.1	8266	7.4	7.4	9084	7.3	7.3	8443	7.5	7.5	8312	6.1	6.1	7731	6.1	6.1	7361	7.6	7.6	6838	6.3	6.3
TD21	Track Dozer 21 (TMA -CAT D9)	3723	13.9	13.9	7638	12.6	12.6	7921	12.5	12.5	7833	1.2	1.2	8071	0.5	0.5	8895	0.3	0.3	8258	0.5	0.5	8130	-0.9	-0.9	7553	-1.0	-1.0	7188	0.7	0.7	6665	-0.8	-0.8
TD22	Track Dozer 22 (TMA -CAT D9)	3820	13.7	13.7	8106	12.3	12.3	8393	12.1	12.1	8306	0.3	0.3	8518	-0.5	-0.5	9306	-0.6	-0.6	8650	-0.4	-0.4	8511	-1.9	-1.9	7921	-1.9	-1.9	7540	-0.2	-0.2	7015	-1.7	-1.7
TD23	Track Dozer 23 (TMA -CAT D9)	4077	12.9	12.9	8897	11.3	11.3	9192	11.2	11.2	9106	-1.3	-1.3	9291	-2.1	-2.1	10030	-2.2	-2.2	9348	-1.9	-1.9	9193	-3.3	-3.3	8586	-3.4	-3.4	8185	-1.7	-1.7	7657	-3.2	-3.2
TD24	Track Dozer 24 (TMA -CAT D9)	4298	12.1	12.1	9133	10.4	10.4	9420	10.3	10.3	9331	-1.7	-1.7	9463	-2.5	-2.5	10167	-2.6	-2.6	9471	-2.3	-2.3	9308	-3.7	-3.7	8692	-3.8	-3.8	8282	-2.2	-2.2	7754	-3.6	-3.6
TD25	Track Dozer 25 (TMA -CAT D9)	4449	11.6	11.6	9306	9.9	9.9	9588	9.8	9.8	9498	-2.1	-2.1	9598	-2.9	-2.9	10279	-3.0	-3.0	9574	-2.7	-2.7	9406	-4.1	-4.1	8785	-4.1	-4.1	8368	-2.5	-2.5	7840	-3.9	-3.9
TD26	Track Dozer 26 (TMA -CAT D9)	4531	11.3	11.3	9421	9.6	9.6	9702	9.5	9.5	9611	-2.3	-2.3	9698	-3.0	-3.0	10369	-3.1	-3.1	9659	-2.9	-2.9	9488	-4.3	-4.3	8864	-4.3	-4.3	8444	-2.7	-2.7	7916	-4.1	-4.1
TD27	Track Dozer 27 (TMA -CAT D9)	4600	11.1	11.1	9505	9.3	9.3	9784	9.2	9.2	9692	-2.4	-2.4	9767	-3.2	-3.2	10428	-3.3	-3.3	9714	-3.1	-3.1	9540	-4.4	-4.4	8915	-4.5	-4.5	8492	-2.9	-2.9	7964	-4.2	-4.2
WD	Komatsu Wheel Dozer WD900	6040	7.6	7.6	6443	7.4	7.4	6455	7.4	7.4	6291	0.5	0.5	5591	0.3	0.3	6100	0.4	0.4	5382	1.3	1.3	5219	1.1	1.1	4613	1.1	1.1	4225	1.4	1.4	3699	1.2	1.2
WL1	Komatsu Wheel Loader WA1200	5921	2.9	2.9	6526	2.8	2.8	6554	2.7	2.7	6394	-2.0	-2.0	5747	-2.2	-2.2	6269	-2.2	-2.2	5553	2.1	2.1	5390	2.0	2.0	4783	2.0	2.0	4393	1.9	1.9	3867	-0.3	-0.3
WL2	CAT 994HL	5957	1.1	1.1	6526	0.9	0.9	6550	0.9	0.9	6389	-4.9	-4.9	5725	-5.1	-5.1	6240	-5.1	-5.1	5522	-1.0	-1.0	5357	-1.1	-1.1	4749	-1.1	-1.1	4358	-0.9	-0.9	3832	-1.1	-1.1
WL3	CAT 980H Wheel Loader	4093	22.2	22.2	7819	21.9	21.9	8072	21.8	21.8	7974	14.8	14.8	8073	14.9	14.9	8826	14.8	14.8	8161	14.5	14.5	8017	14.4	14.4	7424	14.4	14.4	7040	14.6	14.6	6515	14.6	14.6
WL4	CAT 980H Wheel Loader	3743	27.7	27.7	7911	22.9	22.9	8199	22.8	22.8	8112	14.7	14.7	8345	14.7	14.7	9153	14.7	14.7	8507	14.3	14.3	8373	14.3	14.3	7789	14.2	14.2	7415	14.4	14.4	6892	14.4	14.4
WL5	CAT 980H Wheel Loader	3833	27.5	27.5	8334	22.6	22.6	8628	22.5	22.5	8542	14.2	14.2	8762	14.2	14.2	9543	14.1	14.1	8882	13.8	13.8	8740	13.7	13.7	8146	13.7	13.7	7760	13.9	13.9	7234	13.8	13.8
WL6	CAT 980H Wheel Loader	4165	22.0	22.0	7821	21.7	21.7	8068	21.6	21.6	7968	14.8	14.8	8039	14.9	14.9	8780	14.8	14.8	8110	14.5	14.5	7965	14.4	14.4	7369	14.4	14.4	6983	14.6	14.6	6457	14.6	14.6
WP01	Water Pump WP01	5931	-11.1	-11.1	6427	-11.4	-11.4	6451	-11.4	-11.4	6291	-18.3	-18.3	5644	-18.6	-18.6	6179	-18.7	-18.7	5469	-16.8	-16.8	5310	-17.1	-17.1	4707	-17.1	-17.1	4323	-16.9	-16.9	3799	-17.2	-17.2
WP02	Water Pump WP02	5944	-11.8	-11.8	6373	-12.1	-12.1	6394	-12.2	-12.2	6233	-17.9	-17.9	5583	-18.2	-18.2	6123	-18.3	-18.3	5416	-18.2	-18.2	5259	-18.6	-18.6	4659	-18.6	-18.6	4278	-17.9	-17.9	3755	-18.3	-18.3
WP03	Water Pump WP03	6014	-11.6	-11.6	6338	-12.0	-12.0	6350	-12.0	-12.0	6187	-17.3	-17.3	5506	-17.7	-17.7	6036	-17.7	-17.7	5327	-17.4	-17.4	5170	-17.8	-17.8	4570	-17.8	-17.8	4189	-17.2	-17.2	3666	-17.6	-17.6
WP04	Water Pump WP04	6029	-10.8	-10.8	6349	-11.1	-11.1	6359	-11.1	-11.1	6196	-16.5	-16.5	5507	-16.8	-16.8	6032	-16.8	-16.8	5322	-16.5	-16.5	5163	-16.8	-16.8	4562	-16.8	-16.8	4181	-16.4	-16.4	3657	-16.7	-16.7
WP05	Water Pump WP05	6054	-4.2	-4.2	6437	-4.4	-4.4	6446	-4.4	-4.4	6283	-11.3	-11.3	5577	-11.5	-11.5	6083	-11.5	-11.5	5365	-10.9	-10.9	5202	-11.1	-11.1	4595	-11.1	-11.1	4207	-10.9	-10.9	3682	-11.1	-11.1
WP06	Water Pump WP06	6074	2.4	2.4	6347	2.0	2.0	6352	1.9	1.9	6187	1.5	1.5	5477	1.2	1.2	5992	1.0	1.0	5280	1.0	1.0	5120	0.5	0.5	4518	0.5	0.5	4135	1.0	1.0	3611	0.5	0.5
WP07	Water Pump WP07	5875	-11.8	-11.8	6498	-12.2	-12.2	6530	-12.3	-12.3	6372	-18.6	-18.6	5748	-18.9	-18.9	6284	-19.0	-19.0	5572	-17.0	-17.0	5412	-17.3	-17.3	4807	-17.3	-17.3	4421	-16.6	-16.6	3896	-16.9	-16.9
WP08	Water Pump WP08	5879	-11.7	-11.7	6528	-12.1	-12.1	6561	-12.2	-12.2	6403	-18.3	-18.3	5775	-18.6	-18.6	6306	-18.7	-18.7	5592	-15.6	-15.6	5431	-15.8	-15.8	4824	-15.8	-15.8	4436	-15.1	-15.1	3910	-15.3	-15.3

Table 8-2: Point of Reception Impact Summary- Steady Sources

New sources added or modified as part of this updated AAR are higlighted in green.

AAR ID	Description	POR1			POR2			POR3			POR4			POR6			POR7			POR8			POR9			POR10			POR11			POR12		
		Distance	Leq [D]	Leq [E/N]	Distance	Leq [D]	Leq [E/N]	Distance	Leq [D]	Leq [E/N]	Distance	Leq [D]	Leq [E/N]	Distance	Leq [D]	Leq [E/N]	Distance	Leq [D]	Leq [E/N]	Distance	Leq [D]	Leq [E/N]	Distance	Leq [D]	Leq [E/N]	Distance	Leq [D]	Leq [E/N]	Distance	Leq [D]	Leq [E/N]	Distance	Leq [D]	Leq [E/N]
		m	dBA	dBA	m	dBA	dBA	m	dBA	dBA	m	dBA	dBA	m	dBA	dBA	m	dBA	dBA	m	dBA	dBA	m	dBA	dBA	m	dBA	dBA	m	dBA	dBA	m	dBA	dBA
WP09	Water Pump WP09	6430	-0.4	-0.4	6782	-1.7	-1.7	6758	-1.7	-1.7	6586	-1.1	-1.1	5693	-2.2	-2.2	6069	-2.4	-2.4	5307	-1.0	-1.0	5117	-2.1	-2.1	4484	-2.1	-2.1	4063	-0.7	-0.7	3534	-1.8	-1.8
WP10	Water Pump WP10	5783	-0.9	-0.9	5117	-2.1	-2.1	5139	-2.2	-2.2	4981	0.0	0.0	4593	-1.2	-1.2	5368	-1.3	-1.3	4741	-0.2	-0.2	4607	-1.3	-1.3	4024	-1.4	-1.4	3669	0.3	0.3	3153	-0.9	-0.9
WP11	Water Pump WP11	6095	5.4	5.4	4525	3.7	3.7	4376	3.6	3.6	4181	1.8	1.8	3318	0.8	0.8	4134	0.6	0.6	3620	1.6	1.6	3585	0.6	0.6	3170	0.5	0.5	3010	2.0	2.0	2615	1.0	1.0
WP12	Water Pump WP12	6095	1.3	1.3	4189	1.1	1.1	4090	1.0	1.0	3908	-3.1	-3.1	3375	-4.0	-4.0	4359	-4.1	-4.1	3913	-2.9	-2.9	3909	-4.0	-4.0	3535	-4.1	-4.1	3406	-2.6	-2.6	2982	-3.7	-3.7
WP13	Water Pump WP13	5063	0.1	0.1	6289	-1.2	-1.2	6271	-1.2	-1.2	6101	-2.7	-2.7	5306	-3.7	-3.7	5791	-3.8	-3.8	5071	-2.5	-2.5	4908	-3.7	-3.7	4304	-3.8	-3.8	3920	-2.4	-2.4	3396	-3.4	-3.4
WP14	Water Pump WP14	4714	8.9	8.9	6289	3.8	3.8	6272	3.7	3.7	6102	-2.2	-2.2	5307	-2.5	-2.5	5791	-2.6	-2.6	5071	-2.5	-2.5	4909	-2.9	-2.9	4304	-2.9	-2.9	3920	-2.3	-2.3	3396	-2.7	-2.7
WP15	Water Pump WP15	5783	9.1	9.1	5117	3.8	3.8	5139	3.8	3.8	4981	-2.2	-2.2	4593	-2.4	-2.4	5368	-2.5	-2.5	4741	-2.4	-2.4	4607	-2.8	-2.8	4024	-2.9	-2.9	3669	-2.2	-2.2	3153	-2.7	-2.7
WP16	Water Pump WP16	6095	4.1	4.1	4525	3.6	3.6	4376	3.5	3.5	4181	1.8	1.8	3318	1.4	1.4	4134	1.3	1.3	3620	1.2	1.2	3585	0.9	0.9	3170	0.8	0.8	3010	1.6	1.6	2615	1.2	1.2
WP17	Water Pump WP17	6095	11.4	11.4	4189	6.2	6.2	4090	6.1	6.1	3908	-0.4	-0.4	3375	-0.6	-0.6	4359	-0.7	-0.7	3913	-1.0	-1.0	3909	-1.2	-1.2	3535	-1.2	-1.2	3406	-0.8	-0.8	2982	-1.0	-1.0
WP18	Water Pump WP18	5063	1.5	1.5	6289	1.0	1.0	6271	0.9	0.9	6101	-4.2	-4.2	5306	-4.4	-4.4	5791	-4.5	-4.5	5071	-4.3	-4.3	4908	-4.7	-4.7	4304	-4.7	-4.7	3920	-4.1	-4.1	3396	-4.5	-4.5
WP19	Water Pump WP19	4714	1.7	1.7	6289	0.3	0.3	6272	0.2	0.2	6102	2.3	2.3	5307	0.9	0.9	5791	0.7	0.7	5071	1.6	1.6	4909	0.3	0.3	4304	0.2	0.2	3920	2.1	2.1	3396	0.4	0.4
WS	Wet Scrubber	5783	11.8	11.8	5117	6.9	6.9	5139	6.8	6.8	4981	7.4	7.4	4593	6.0	6.0	5368	5.8	5.8	4741	5.9	5.9	4607	4.4	4.4	4024	4.3	4.3	3669	6.4	6.4	3153	4.8	4.8
MGR_OPMill	Motor Grader Route Open Pit to Mill	5783	5.1	5.1	5117	3.5	3.5	5139	3.4	3.4	4981	4.4	4.4	4593	3.2	3.2	5368	3.0	3.0	4741	3.4	3.4	4607	2.5	2.5	4024	2.5	2.5	3669	3.8	3.8	3153	2.9	2.9
MGR_SP	Motor Grader Route Stockpile	5783	4.6	4.6	5117	3.0	3.0	5139	2.9	2.9	4981	8.5	8.5	4593	5.8	5.8	5368	5.6	5.6	4741	8.2	8.2	4607	5.2	5.2	4024	5.2	5.2	3669	8.8	8.8	3153	5.7	5.7
MGR_PAG	Motor Grader Route PAG	6095	4.2	4.2	4189	2.9	2.9	4090	2.9	2.9	3908	7.3	7.3	3375	5.5	5.5	4359	5.4	5.4	3913	7.0	7.0	3909	4.9	4.9	3535	4.8	4.8	3406	7.5	7.5	2982	5.4	5.4
MGR_NPAG	Motor Grader Route NPAG	6095	8.8	8.8	4189	6.4	6.4	4090	6.3	6.3	3908	2.5	2.5	3375	2.0	2.0	4359	1.8	1.8	3913	2.2	2.2	3909	1.4	1.4	3535	1.4	1.4	3406	2.6	2.6	2982	1.8	1.8
MGR_OB	Motor Grader Route OB	6095	9.1	9.1	4189	6.6	6.6	4090	6.5	6.5	3908	2.6	2.6	3375	2.1	2.1	4359	2.0	2.0	3913	2.3	2.3	3909	1.5	1.5	3535	1.5	1.5	3406	2.7	2.7	2982	1.9	1.9
TRE_OP-Mill	Truck Route Open Pit to Mill (Empty Truck)	4714	5.1	5.1	6289	4.2	4.2	6272	4.1	4.1	6102	4.2	4.2	5307	3.5	3.5	5791	3.4	3.4	5071	3.3	3.3	4909	2.9	2.9	4304	2.8	2.8	3920	3.7	3.7	3396	3.1	3.1
TRE_OP-LGO	Truck Route Open Pit to LGO (Empty Truck)	5783	1.6	1.6	5117	0.7	0.7	5139	0.6	0.6	4981	4.8	4.8	4593	2.7	2.7	5368	2.6	2.6	4741	4.6	4.6	4607	2.4	2.4	4024	2.3	2.3	3669	5.1	5.1	3153	2.8	2.8
TRE_OP-PAG	Truck Route Open Pit to PAG (Empty Truck)	5783	8.5	8.5	5117	7.7	7.7	5139	7.7	7.7	4981	10.8	10.8	4593	9.5	9.5	5368	9.4	9.4	4741	10.7	10.7	4607	9.0	9.0	4024	9.0	9.0	3669	11.1	11.1	3153	9.4	9.4
TRE_OP-NPAG	Truck Route Open Pit to NPAG (Empty Truck)	5783	10.9	10.9	5117	9.4	9.4	5139	9.3	9.3	4981	5.2	5.2	4593	5.0	5.0	5368	4.9	4.9	4741	5.0	5.0	4607	4.7	4.7	4024	4.6	4.6	3669	5.4	5.4	3153	5.0	5.0
TRE_OP-OB	Truck Route Open Pit to Overburden (Empty Truck)	5783	3.7	3.7	5117	2.2	2.2	5139	2.1	2.1	4981	-2.1	-2.1	4593	-2.3	-2.3	5368	-2.4	-2.4	4741	-2.3	-2.3	4607	-2.6	-2.6	4024	-2.7	-2.7	3669	-2.0	-2.0	3153	-2.4	-2.4
TRE_OP-TMA	Truck Route Open Pit to TMA Staging Area (Empty Truck)	6095	8.9	8.9	4525	7.5	7.5	4376	7.4	7.4	4181	2.5	2.5	3318	2.3	2.3	4134	2.2	2.2	3620	2.3	2.3	3585	1.9	1.9	3170	1.9	1.9	3010	2.6	2.6	2615	2.2	2.2
TRE_TMA1	Truck Route TMA Staging Area to TMA Dam (Empty Truck)	6095	10.6	0.0	4189	8.8	0.0	4090	8.7	0.0	3908	-0.7	0.0	3375	-0.9	0.0	4359	-1.0	0.0	3913	-1.1	0.0	3909	-1.7	0.0	3535	-1.8	0.0	3406	-1.0	0.0	2982	-1.6	0.0
TRE_TMA2	Truck Route TMA Staging Area to TMA Dam (Empty Truck)	5063	9.5	9.5	6289	8.9	8.9	6271	8.8	8.8	6101	-0.4	-0.4	5306	-0.7	-0.7	5791	-0.8	-0.8	5071	-1.1	-1.1	4908	-1.6	-1.6	4304	-1.7	-1.7	3920	-1.0	-1.0	3396	-1.5	-1.5
TRL_OP-Mill	Truck Route Open Pit to Mill (Loaded Truck)	5783	19.2	19.2	5117	18.6	18.6	5139	18.6	18.6	4981	18.4	18.4	4593	18.0	18.0	5368	17.9	17.9	4741	17.9	17.9	4607	17.7	17.7	4024	17.7	17.7	3669	18.2	18.2	3153	18.0	18.0
TRL_OP-LGO	Truck Route Open Pit to LGO (Loaded Truck)	5783	15.8	15.8	5117	15.1	15.1	5139	15.1	15.1	4981	18.6	18.6	4593	17.1	17.1	5368	17.0	17.0	4741	18.6	18.6	4607	16.8	16.8	4024	16.8	16.8	3669	19.0	19.0	3153	17.2	17.2
TRL_OP-PAG	Truck Route Open Pit to PAG (Loaded Truck)	5783	22.8	22.8	5117	22.3	22.3	5139	22.3	22.3	4981	24.8	24.8	4593	24.1	24.1	5368	23.9	23.9	4741	24.9	24.9	4607	23.7	23.7	4024	23.6	23.6	3669	25.3	25.3	3153	24.0	24.0
TRL_OP-NPAG	Truck Route Open Pit to NPAG (Loaded Truck)	5783	24.7	24.7	5117	23.7	23.7	5139	23.6	23.6	4981	19.9	19.9	4593	19.9	19.9	5368	19.8	19.8	4741	19.7	19.7	4607	19.7	19.7	4024	19.6	19.6	3669	20.0	20.0	3153	19.9	19.9
TRL_OP-OB	Truck Route Open Pit to Overburden (Loaded Truck)	5783	17.5	17.5	5117	16.4	16.4	5139	16.4	16.4	4981	12.6	12.6	4593	12.6	12.6	5368	12.5	12.5	4741	12.4	12.4	4607	12.4	12.4	4024	12.3	12.3	3669	12.7	12.7	3153	12.6	12.6
TRL_OP-TMA	Truck Route Open Pit to TMA Staging Area (Loaded Truck)	5783	22.7	22.7	5117	21.7	21.7	5139	21.7	21.7	4981	17.2	17.2	4593	17.2	17.2	5368	17.1	17.1	4741	17.0	17.0	4607	16.9	16.9	4024	16.9	16.9	3669	17.3	17.3	3153	17.2	17.2
TRL_TMA1	Truck Route TMA Staging Area to TMA Dam	6095	10.6	0.0	4189	8.8	0.0	4090	8.7	0.0	3908	-0.7	0.0	3375	-0.9	0.0	4359	-1.0	0.0	3913	-1.1	0.0	3909	-1.7	0.0	3535	-1.8	0.0	3406	-1.0	0.0	2982	-1.6	0.0
TRL_TMA2	Truck Route TMA Staging Area to TMA Dam	6095	9.5	9.5	4189	8.9	8.9	4090	8.8	8.8	3908	-0.4	-0.4	3375	-0.7	-0.7	4359	-0.8	-0.8	3913	-1.1	-1.1	3909	-1.6	-1.6	3535	-1.7	-1.7	3406	-1.0	-1.0	2982	-1.5	-1.5
WTR_OPMill	Water Truck Route Open Pit to Mill	6095	2.5	2.5	4189	0.6	0.6	4090	0.5	0.5	3908	2.0	2.0	3375	0.5	0.5	4359	0.3	0.3	3913	0.7	0.7	3909	-0.3	-0.3	3535	-0.4	-0.4	3406	1.2	1.2	2982	0.1	0.1
WTR_SP	Water Truck Route Stockpile	4870	2.0	2.0	4760	0.1	0.1	4925	0.0	0.0	4808	6.4	6.4	5048	3.5	3.5	6111	3.3	3.3	5637	6.0	6.0	5602	2.9	2.9	5160	2.8	2.8	4942	6.7	6.7	4489	3.5	3.5
WTR_PAG	Water Truck Route PAG	5050	1.9	1.9	4718	0.1	0.1	4857	0.0	0.0	4733	5.1	5.1	4891	3.3	3.3	5936	3.1	3.1	5458	4.7	4.7	5422	2.6	2.6	4980	2.5	2.5	4764	5.4	5.4	4313	3.1	3.1
WTR_NPAG	Water Truck Route NPAG	5063	6.6	6.6	4724	3.9	3.9	4861	3.8	3.8	4737	-0.3	-0.3	4885	-1.0	-1.0	5927	-1.1	-1.1	5447	-0.6	-0.6	5410	-1.7	-1.7	4967	-1.7	-1.7	4750	-0.1	-0.1	4299	-1.3	-1.3
WTR_OB	Water Truck Route OB	0	6.9	6.9	0	4.3	4.3	0	4.2	4.2	0	-0.1	-0.1	0	-0.8	-0.8	0	-1.0	-1.0	0	-0.6	-0.6	0	-1.5	-1.5	0	-1.6	-1.6	0	-0.1	-0.1	0	-1.2	-1.2
Total SPL at POR [dBA]			39	38		34	32		34	31		34	32		37	33		34	31		36	32		39	33		41	35		42	36		44	37
MECP Sound Level Limit [dBA]			45	40		45	40		45	40		45	40		45	40		45	40		45	40		45	40		45	40		45	40		45	40
Excess [dBA]			**-8**	**-4**		**-11**	**-7**		**-11**	**-7**		**-11**	**-7**		**-8**	**-5**		**-11**	**-8**		**-8**	**-5**		**-8**	**-5**		**-8**	**-5**		**-6**	**-4**		**-4**	**-2**

Table 8-2: Point of Reception Impact Summary- Steady Sources

New sources added or modified as part of this updated AAR are higlighted in green.

AAR ID	Description	POR14			POR15			POR16			POR17			POR19			POR20			POR21			POR22			POR23			POR24			POR25		
		Distance m	Leq [D] dBA	Leq [E/N] dBA	Distance m	Leq [D] dBA	Leq [E/N] dBA	Distance m	Leq [D] dBA	Leq [E/N] dBA	Distance m	Leq [D] dBA	Leq [E/N] dBA	Distance m	Leq [D] dBA	Leq [E/N] dBA	Distance m	Leq [D] dBA	Leq [E/N] dBA	Distance m	Leq [D] dBA	Leq [E/N] dBA	Distance m	Leq [D] dBA	Leq [E/N] dBA	Distance m	Leq [D] dBA	Leq [E/N] dBA	Distance m	Leq [D] dBA	Leq [E/N] dBA	Distance m	Leq [D] dBA	Leq [E/N] dBA
AC1	WMP Air Compressor 1	7677	-17.8	-17.8	2024	-13.5	-13.5	1925	-16.6	-16.6	2556	-16.7	-16.7	6605	-15.7	-15.7	6134	-18.3	-18.3	8785	-18.3	-18.3	8745	-9.5	-9.5	5406	-16.2	-16.2	6065	-16.3	-16.3	6703	-9.0	-9.0
AC2	WMP Air Compressor 2	8363	-18.9	-18.9	1603	-15.5	-15.5	1477	-18.7	-18.7	2129	-18.8	-18.8	6128	-17.9	-17.9	6741	-20.3	-20.3	9533	-20.3	-20.3	9447	-11.4	-11.4	5963	-18.2	-18.2	6666	-18.3	-18.3	7344	-10.8	-10.8
AC3	WMP Air Compressor 3	9018	-19.7	-19.7	2191	-17.0	-17.0	2054	-20.0	-20.0	1331	-20.1	-20.1	6506	-18.9	-18.9	7468	-21.8	-21.8	10057	-21.8	-21.8	10078	-17.2	-17.2	6717	-19.8	-19.8	7396	-19.9	-19.9	8046	-17.1	-17.1
AC4	WMP Air Compressor 4	7922	-17.5	-17.5	2497	-13.9	-13.9	2384	-16.8	-16.8	2190	-16.9	-16.9	7070	-15.8	-15.8	6486	-18.7	-18.7	8878	-18.7	-18.7	8958	-14.0	-14.0	5808	-16.7	-16.7	6422	-16.7	-16.7	7015	-8.9	-8.9
BD1	Blast Hole Drill 1 - Sandvik DP1500i	3326	-7.9	-7.9	5851	-5.5	-5.5	5844	-6.7	-6.7	6881	-6.7	-6.7	9612	-10.7	-10.7	2732	-11.7	-11.7	4194	-11.7	-11.7	4256	-3.6	-3.6	2793	-10.6	-10.6	2743	-10.7	-10.7	2835	-3.6	-3.6
BD2	Blast Hole Drill 2- Sandvik D75KS	3316	-8.4	-8.4	5867	-6.0	-6.0	5860	-7.2	-7.2	6894	-7.2	-7.2	9628	-10.4	-10.4	2732	-11.4	-11.4	4178	-11.4	-11.4	4244	-3.2	-3.2	2799	-10.5	-10.5	2744	-10.6	-10.6	2831	-3.4	-3.4
BD3	Blast Hole Drill 3- Sandvik D75KS	3300	-13.1	-13.1	5852	-9.1	-9.1	5846	-10.7	-10.7	6898	-10.8	-10.8	9602	8.5	8.5	2698	7.2	7.2	4187	7.2	7.2	4235	10.6	10.6	2761	9.4	9.4	2709	9.3	9.3	2802	10.9	10.9
BD4	Blast Hole Drill 4- Sandvik D75KS	3293	-6.6	-6.6	5879	-6.6	-6.6	5873	-7.7	-7.7	6914	-7.8	-7.8	9632	-11.4	-11.4	2712	-12.6	-12.6	4163	-12.6	-12.6	4222	-4.1	-4.1	2784	-10.7	-10.7	2724	-10.7	-10.7	2808	-3.9	-3.9
BD5	Blast Hole Drill 5- Sandvik D75KS	3388	-13.6	-13.6	5873	-9.0	-9.0	5863	-10.8	-10.8	6849	-10.8	-10.8	9667	-4.7	-4.7	2833	-5.4	-5.4	4193	-5.4	-5.4	4301	5.3	5.3	2897	-6.2	-6.2	2845	-6.6	-6.6	2925	4.8	4.8
C	Crusher	3326	12.8	12.8	7152	13.0	13.0	7131	11.7	11.7	7721	11.6	11.6	11052	10.4	10.4	3634	9.2	9.2	3228	9.2	9.2	3911	12.1	12.1	3990	10.9	10.9	3682	10.8	10.8	3424	12.1	12.1
DC1	Dust Collector 1	3366	6.7	6.7	7158	14.0	14.0	7135	7.7	7.7	7708	7.6	7.6	11069	6.6	6.6	3675	5.1	5.1	3247	5.1	5.1	3946	8.3	8.3	4027	6.8	6.8	3723	6.7	6.7	3467	8.3	8.3
DC2	Dust Collector 2	3620	5.0	5.0	6995	8.5	8.5	6969	7.0	7.0	7461	6.9	6.9	10972	5.9	5.9	3820	4.4	4.4	3512	4.3	4.3	4222	7.5	7.5	4112	6.0	6.0	3862	5.9	5.9	3659	7.5	7.5
E1	Komatsu Diesel Excavator PC5500	3342	12.7	12.7	5819	14.9	14.9	5812	14.0	14.0	6856	14.0	14.0	9579	-0.1	-0.1	2727	-0.5	-0.5	4224	-0.5	-0.5	4277	5.5	5.5	2777	-2.8	-2.8	2736	-2.8	-2.8	2839	4.6	4.6
E2	Komatsu Diesel Excavator PC5500	3260	-1.7	-1.7	5952	-0.7	-0.7	5945	-1.5	-1.5	6967	-1.5	-1.5	9708	-3.3	-3.3	2731	-3.8	-3.8	4095	-3.8	-3.8	4177	4.6	4.6	2827	-2.8	-2.8	2746	-2.8	-2.8	2806	4.5	4.5
E3	Komatsu Diesel Excavator PC8000	3267	7.5	7.5	5911	5.1	5.1	5905	4.2	4.2	6945	4.2	4.2	9660	1.1	1.1	2705	0.3	0.3	4131	0.3	0.3	4193	8.2	8.2	2788	1.6	1.6	2718	1.5	1.5	2792	8.2	8.2
E4	Komatsu Diesel Excavator PC3000	3225	5.4	5.4	6003	6.6	6.6	5996	5.6	5.6	7013	5.5	5.5	9756	4.8	4.8	2729	4.2	4.2	4045	4.2	4.2	4135	12.3	12.3	2843	5.9	5.9	2746	5.8	5.8	2790	12.4	12.4
E5	Komatsu Diesel Excavator PC800LC	3196	-4.9	-4.9	6004	-7.1	-7.1	5998	-8.5	-8.5	7032	-8.6	-8.6	9743	-9.0	-9.0	2691	-9.9	-9.9	4037	-10.0	-10.0	4112	-7.1	-7.1	2808	-8.1	-8.1	2708	-8.1	-8.1	2753	-6.8	-6.8
E6	Komatsu Diesel Excavator PC360LC	3241	-3.8	-3.8	5967	-2.8	-2.8	5960	-4.1	-4.1	6986	-4.2	-4.2	9718	-5.3	-5.3	2718	-6.1	-6.1	4078	-6.1	-6.1	4157	2.1	2.1	2820	-4.4	-4.4	2734	-4.5	-4.5	2789	2.2	2.2
E7	Komatsu Diesel Excavator PC360LC	5990	8.9	8.9	4192	10.8	10.8	4129	9.6	9.6	4282	9.5	9.5	8619	9.4	9.4	4969	8.1	8.1	6648	8.1	8.1	6927	10.6	10.6	4566	9.4	9.4	4936	9.3	9.3	5318	10.9	10.9
E8	Komatsu Diesel Excavator PC360LC	6122	9.9	9.9	4896	11.0	11.0	4824	10.1	10.1	4550	10.1	10.1	9369	9.2	9.2	5353	8.3	8.3	6476	8.3	8.3	6969	10.2	10.2	5067	9.5	9.5	5333	9.4	9.4	5606	10.4	10.4
E9	Komatsu Diesel Excavator PC360LC	6027	9.6	9.6	4661	10.9	10.9	4593	10.0	10.0	4477	10.0	10.0	9114	9.3	9.3	5175	8.3	8.3	6490	8.3	8.3	6906	10.4	10.4	4853	9.5	9.5	5151	9.5	9.5	5459	10.7	10.7
E10	Komatsu Diesel Excavator PC360LC	6224	8.9	8.9	4313	10.4	10.4	4241	9.4	9.4	4153	9.3	9.3	8788	8.9	8.9	5257	7.8	7.8	6789	7.8	7.8	7137	10.2	10.2	4870	9.0	9.0	5226	9.0	9.0	5588	10.4	10.4
E11	Komatsu Diesel Excavator PC360LC	6581	8.1	8.1	3901	9.6	9.6	3823	8.5	8.5	3692	8.4	8.4	8419	8.2	8.2	5493	7.0	7.0	7240	7.0	7.0	7526	9.4	9.4	5030	8.2	8.2	5454	8.2	8.2	5875	9.7	9.7
E12	Komatsu Diesel Excavator PC360LC	6907	7.5	7.5	3654	8.9	8.9	3568	7.8	7.8	3325	7.7	7.7	8206	7.6	7.6	5753	6.4	6.4	7606	6.4	6.4	7867	8.7	8.7	5246	7.6	7.6	5709	7.5	7.5	6164	9.0	9.0
E13	Komatsu Diesel Excavator PC360LC	7028	7.2	7.2	3511	8.6	8.6	3421	7.5	7.5	3171	7.4	7.4	8071	7.4	7.4	5837	6.2	6.2	7760	6.1	6.1	7999	8.5	8.5	5306	7.3	7.3	5790	7.3	7.3	6264	8.7	8.7
E14	Komatsu Diesel Excavator PC360LC	7082	7.0	7.0	3397	8.5	8.5	3307	7.3	7.3	3091	7.3	7.3	7960	7.1	7.1	5860	6.0	6.0	7844	6.0	6.0	8061	8.2	8.2	5312	7.2	7.2	5811	7.1	7.1	6299	8.5	8.5
E15	Komatsu Diesel Excavator PC360LC	7170	6.6	6.6	3142	8.0	8.0	3051	7.0	7.0	2955	7.0	7.0	7709	6.7	6.7	5881	5.8	5.8	8003	5.8	5.8	8169	7.9	7.9	5297	7.0	7.0	5828	6.9	6.9	6347	8.1	8.1
E16	Komatsu Diesel Excavator PC360LC	7241	6.4	6.4	2967	7.8	7.8	2875	6.8	6.8	2865	6.7	6.7	7537	6.4	6.4	5909	5.6	5.6	8121	5.6	5.6	8253	7.7	7.7	5300	6.8	6.8	5853	6.7	6.7	6393	12.3	12.3
E17	Komatsu Diesel Excavator PC360LC	3034	16.0	0.0	7193	20.3	0.0	7177	18.8	0.0	7885	18.7	0.0	11012	17.7	0.0	3385	16.3	0.0	3047	16.3	0.0	3638	19.4	0.0	3786	18.2	0.0	3438	18.1	0.0	3147	19.4	0.0
E18	Komatsu Diesel Excavator PC360LC	2992	16.1	0.0	7214	20.4	0.0	7199	18.9	0.0	7920	18.8	0.0	11022	17.8	0.0	3359	16.4	0.0	3010	16.4	0.0	3595	19.5	0.0	3769	18.3	0.0	3413	18.2	0.0	3114	19.5	0.0
EO_PC	EO Portable Plant - Elrus 3054 Jaw Crusher	2589	19.2	0.0	8151	24.6	0.0	8141	23.4	0.0	8898	23.3	0.0	11838	21.7	0.0	3589	20.5	0.0	2039	20.4	0.0	2902	23.5	0.0	4205	22.4	0.0	3666	22.3	0.0	3137	28.3	0.0
EO_SCNR	EO Portable Plant - Terex 380 MVP Cone and Screener	2596	20.0	0.0	8141	26.6	0.0	8131	25.1	0.0	8886	24.9	0.0	11830	23.1	0.0	3588	21.5	0.0	2052	21.5	0.0	2912	25.3	0.0	4202	23.9	0.0	3665	23.7	0.0	3138	30.2	0.0
EO_GENSET	EO Portable Plant - Genset	2597	24.0	0.0	8149	30.4	0.0	8139	28.8	0.0	8893	28.7	0.0	11839	27.1	0.0	3594	25.5	0.0	2045	25.4	0.0	2910	29.2	0.0	4209	27.7	0.0	3671	27.5	0.0	3143	34.0	0.0
EO_FEL	EO Portable Plant - Wheel Loader (Doolan DL420)	2589	18.2	0.0	8138	24.4	0.0	8128	23.1	0.0	8885	23.0	0.0	11825	20.9	0.0	3581	19.7	0.0	2052	19.6	0.0	2907	23.1	0.0	4195	21.9	0.0	3658	21.8	0.0	3131	28.0	0.0
MBPA_PC	Portable Plant - Powerscreen Premiertrak 600 Jaw Crusher	3331	20.5	20.5	7130	22.1	22.1	7108	20.6	20.6	7701	20.5	20.5	11031	19.5	19.5	3625	17.9	17.9	3247	17.9	17.9	3921	21.2	21.2	3976	19.7	19.7	3673	19.6	19.6	3420	21.3	21.3
MBPA_GENSET	Portable Plant - CAT C13 Genset	3335	15.3	15.3	7109	17.7	17.7	7088	16.1	16.1	7683	15.9	15.9	11011	14.9	14.9	3617	13.2	13.2	3264	13.2	13.2	3931	16.7	16.7	3964	15.1	15.1	3664	15.0	15.0	3416	16.8	16.8
MB_W-E	Mill Building - Wall - East	3206	4.2	4.2	6007	5.7	5.7	6000	4.9	4.9	7026	4.9	4.9	9751	3.5	3.5	2707	2.4	2.4	4037	2.4	2.4	4119	4.7	4.7	2823	3.7	3.7	2724	3.6	3.6	2767	4.8	4.8
MB_W-N	Mill Building - Wall - North	5027	8.2	8.2	6382	9.7	9.7	6329	8.8	8.8	6277	8.7	8.7	10677	7.0	7.0	4855	6.0	6.0	4904	6.0	6.0	5684	8.6	8.6	4896	7.3	7.3	4871	7.3	7.3	4865	8.7	8.7
MB_BD-E	Mill Building - Bay Door - West	4950	5.7	5.7	6316	7.6	7.6	6265	6.5	6.5	6264	6.4	6.4	10596	5.0	5.0	4755	3.8	3.8	4873	3.8	3.8	5622	6.3	6.3	4791	5.1	5.1	4770	5.1	5.1	4772	6.5	6.5
RD1	RC Drill Sandvik DR580	3203	-0.6	-0.6	6039	-1.3	-1.3	6031	-1.8	-1.8	7043	-1.8	-1.8	9789	-2.6	-2.6	2729	-2.9	-2.9	4010	-2.9	-2.9	4107	5.4	5.4	2855	-2.3	-2.3	2748	-2.5	-2.5	2780	5.3	5.3
RD2	RC Drill Sandvik DR580	3206	1.5	1.5	6007	-2.5	-2.5	6000	-3.1	-3.1	7026	-3.2	-3.2	9751	-4.0	-4.0	2707	-4.3	-4.3	4037	-4.3	-4.3	4119	1.7	1.7	2823	-2.7	-2.7	2724	-2.8	-2.8	2767	4.3	4.3
RD3	RC Drill Sandvik DR560	3217	-2.7	-2.7	6068	0.4	0.4	6060	0.0	0.0	7048	0.0	0.0	9831	4.3	4.3	2773	4.2	4.2	3990	4.2	4.2	4112	4.2	4.2	2906	4.1	4.1	2793	4.2	4.2	2814	13.0	13.0
T1	Transformer 1	4313	14.8	14.8	7173	16.3	16.3	7133	15.3	15.3	7293	15.2	15.2	11314	13.4	13.4	4546	12.4	12.4	3901	12.4	12.4	4833	14.8	14.8	4793	13.6	13.6	4585	13.6	13.6	4396	14.9	14.9
T2	Transformer 2	4301	14.8	14.8	7171	16.3	16.3	7131	15.3	15.3	7296	15.2	15.2	11310	13.5	13.5	4535	12.4	12.4	3892	12.4	12.4	4822	14.8	14.8	4782	13.7	13.7	4573	13.6	13.6	4384	14.9	14.9
TD01	Track Dozer 01 (Pit - Komatsu D475)	3199	-2.2	-2.2	6023	0.9	0.9	6017	-1.2	-1.2	7039	-1.3	-1.3	9769	-1.4	-1.4	2712	-2.8	-2.8	4022	-2.8	-2.8	4109	0.8	0.8	2834	-0.6	-0.6	2730	-0.7	-0.7	2768	1.2	1.2
TD02	Track Dozer 02 (Pit -CAT D10)	3398	-1.2	-1.2	5799	7.1	7.1	5791	5.7	5.7	6810	5.8	5.8	9581	3.7	3.7	2786	3.0	3.0	4255	3.0	3.0	4328	12.4	12.4	2827	0.7	0.7	2795	0.6	0.6	2900	10.2	10.2
TD03	Track Dozer 03 (Pit -CAT D10)	3308	-2.1	-2.1	5901	1.9	1.9	5894	0.6	0.6	6913	0.6	0.6	9667	-1.1	-1.1	2752	-2.0	-2.0	4149	-2.0	-2.0	4229	7.3	7.3	2829	-1.4	-1.4	2765	-1.4	-1.4	2840	6.8	6.8
TD04	Track Dozer 04 (Pit -CAT D10)	3262	-9.5	-9.5	5999	-5.1	-5.1	5991	-6.8	-6.8	6987	-6.9	-6.9	9766	-6.9	-6.9	2773	-7.8	-7.8	4058	-7.9	-7.9	4166	1.4	1.4	2883	-6.4	-6.4	2790	-6.4	-6.4	2833	1.6	1.6
TD05	Track Dozer 05 (PAG - Komatsu D375)	3062	11.1	11.1	8290	15.8	15.8	8273	14.4	14.4	8848	14.3	14.3	12095	12.0	12.0	4039	10.7	10.7	2195	10.6	10.6	3301	13.9	13.9	4614	12.4	12.4	4112	12.3	12.3	3611	13.9	13.9
TD06	Track Dozer 06 (PAG - Komatsu D375)	2386	13.3	13.3	9027	24.2	24.2	9023	21.0	21.0	9853	20.8	20.8	12577	16.0	16.0	3916	14.8	14.8	1085	14.8	14.8	2303	18.2	18.2	4679	17.1	17.1	4009	17.0	17.0	3311	18.1	18.1
TD07D	Track Dozer 07 (PAG - Komatsu D475)	3224	22.4	0.0	7959	27.1	0.0	7939	25.2	0.0	8470	25.0	0.0	11822	23.4	0.0	3995	21.5	0.0	2567	21.4	0.0	3571	25.3	0.0	4499	23.3	0.0	4061	23.1	0.0	3635	25.3	0.0
TD07N	Track Dozer 07 (PAG - CAT D10)	3220	0.0	16.5	7944	0.0	20.9	7924	0.0	19.3	8457	0.0	19.1	11807	0.0	17.3	3984	0.0	15.7	2575	0.0	15.6	3572	0.0	19.1	4486	0.0	17.4	4049	0.0	17.3	3626	0.0	19.2
TD08D	Track Dozer 08 (PAG - Komatsu D475)	3183	22.5	0.0	8021	27.3	0.0	8001	25.5	0.0	8543	25.3	0.0	11871	23.6	0.0	3994	21.7	0.0	2492	21.7	0.0	3511	25.5	0.0	4513	23.5	0.0	4061	23.4	0.0	3620	25.5	0.0
TD08N	Track Dozer 08 (PAG - CAT D10)	3185	0.0	16.7	8009	0.0	21.2	7989	0.0	19.6	8531	0.0	19.4	11859	0.0	17.5	3989	0.0	15.9	2503	0.0	15.9	3517	0.0	19.4	4506	0.0	17.7	4056	0.0	17.6	3617	0.0	19.4
TD09	Track Dozer 09 (Ore -CAT D9)	2547	10.2	10.2	7738	18.6	18.6	7729	15.0	15.0	8542	14.8	14.8	11424	15.6	15.6	3299	11.7	11.7	2390	11.7	11.7	3025	17.6	17.6	3859	13.9	13.9	3370	13.8	13.8	2915	17.8	17.8
TD10	Track Dozer 10 (Ore -CAT D8)	2897	11.3	11.3	8513	19.4	19.4	8499	16.1	16.1	9131	15.9	15.9	12259	10.6	10.6	4027	9.2	9.2	1895	9.2	9.2	3056	12.6	12.6	4655	11.1	11.1	4106	11.0	11.0	3549	12.6	12.6
TD11D	Track Dozer 11 (NPAG/OB - Komatsu D475)	5100	11.8	0.0	3957	15.3	0.0	3934	13.1	0.0	5000	13.0	0.0	8048	13.2	0.0	3817	11.7	0.0	6174	11.6	0.0	6134	14.8	0.0	3332	13.3	0.0	3772	13.3	0.0	4256	19.8	0.0
TD11N	Track Dozer 11 (NPAG/OB - CAT D10)	5354	0.0	6.5	3984	0.0	9.6	3948	0.0	7.7	4758	0.0	7.6	8201	0.0	7.6	4159	0.0	6.4	6297	0.0	6.3	6360	0.0	9.2	3702	0.0	7.9	4118	0.0	7.9	4566	0.0	14.0
TD12D	Track Dozer 12 (NPAG/OB - Komatsu D475)	4413	15.2	0.0	5442	18.3	0.0	5410	16.6	0.0	5982	16.5	0.0	9550	16.2	0.0	3785	14.5	0.0	4952	14.5	0.0	5279	18.0	0.0	3683	16.2	0.0	3782	16.2	0.0	3948	18.2	0.0
TD12N	Track Dozer 11 (NPAG/OB - CAT D10)	4509	0.0	9.7	5454	0.0	12.4	5419	0.0	11.0	5927	0.0	10.9	9592	0.0	10.5	3899	0.0	9.0	5004	0.0	9.0	5364	0.0	12.1	3795	0.0	10.6	3897	0.0	10.6	4058	0.0	12.3
TD13	Track Dozer 13 (NPAG/OB -CAT D9)	4570	-0.7	-0.7	4224	3.0	3.0	4219	1.4	1.4	5545	1.3	1.3	8090	0.8	0.8	3226	0.0	0.0	5797	0.0	0.0	5633	7.2	7.2	2753	1.9	1.9	3181	1.8	1.8	3679	7.7	7.7
TD14	Track Dozer 14 (NPAG/OB -CAT D9)	4196	-2.0	-2.0	4608	2.4	2.4	4605	0.6	0.6	5908	0.6	0.6	8404	0.7	0.7	2947	-1.2	-1.2	5406	-1.2	-1.2	5247	2.7	2.7	2571	0.9	0.9	2911	0.8	0.8	3350	6.3	6.3
TD15	Track Dozer 15 (NPAG/OB -CAT D9)	4298	2.2	2.2	5392	5.9	5.9	5364	3.9	3.9	6031	3.9	3.9	9455	3.5	3.5	3624	2.1	2.1	4916	2.0	2.0	5186	5.2	5.2	3514	3.8	3.8	3620	3.8	3.8	3801	5.6	5.6
TD16	Track Dozer 16 (NPAG/OB -CAT D9)	5031	-0.5	-0.5	4164	3.1	3.1	4137	1.0	1.0	5075	0.9	0.9	8282	1.0	1.0	3842	-0.3	-0.3	6020	-0.4	-0.4	6043	2.5	2.5	3411	1.3	1.3	3803	1.3	1.3	4241	7.5	7.5
TD17	Track Dozer 17 (TMA -CAT D9)	5937	-1.0	0.0	4162	1.3	0.0	4101	-0.1	0.0	4313	-0.2	0.0	8575	-0.2	0.0	4900	-1.8	0.0	6619	-1.8	0.0	6880	1.1	0.0	4492	-0.4	0.0	4866	-0.4	0.0	5254	1.5	0.0
TD18	Track Dozer 18 (TMA -CAT D9)	6153	0.2	0.2	4944	1.5	1.5	4871	0.4	0.4	4559	0.3	0.3	9421	-0.5	-0.5	5401	-1.6	-1.6	6485	-1.6	-1.6	6993	0.6	0.6	5121	-0.4	-0.4	5382	-0.4	-0.4	5648	0.8	0.8
TD19	Track Dozer 19 (TMA -CAT D9)	6045	-0.1	-0.1	4718	1.4	1.4	4649	0.3	0.3	4497	0.2	0.2	9176	-0.4	-0.4	5214	-1.6	-1.6	6482	-1.6	-1.6	6917	0.7	0.7	4901	-0.3	-0.3	5191	-0.3	-0.3	5489	1.2	1.2
TD20	Track Dozer 20 (TMA -CAT D9)	6359	6.2	6.2	4234	7.8	7.8	4159	6.6	6.6	4013	6.5	6.5	8728	6.2	6.2	5370	4.9	4.9	6931	4.9	4.9	7276	7.6	7.6	4966	6.2	6.2	5337	6.2	6.2	5711	7.8	7.8
TD21	Track Dozer 21 (TMA -CAT D9)	6194	-0.8	-0.8	4378	0.9	0.9	4307	-0.3	-0.3	4207	-0.4	-0.4	8850	-0.7	-0.7	5248	-2.1	-2.1	6739	-2.1	-2.1	7101	0.8	0.8	4873	-0.7	-0.7	5219	-0.8	-0.8	5570	1.0	1.0
TD22	Track Dozer 22 (TMA -CAT D9)	6516	-1.7	-1.7	3958	0.1	0.1	3881	-1.3	-1.3	3768	-1.3	-1.3	8469	-1.4	-1.4	5444	-2.9	-2.9	7164	-2.9	-2.9	7458	0.0	0.0	4991	-1.6	-1.6	5406	-1.6	-1.6	5819	0.3	0.3
TD23	Track Dozer 23 (TMA -CAT D9)	7122	-3.2	-3.2	3301	-1.4	-1.4	3210	-2.8	-2.8	3030	-2.9	-2.9	7866	-2.9	-2.9	5875	-4.2	-4.2	7910	-4.2	-4.2	8109	-1.7	-1.7	5313	-2.9	-2.9	5825	-3.0	-3.0	6324	-1.4	-1.4
TD24	Track Dozer 24 (TMA -CAT D9)	7203	-3.6	-3.6	3044	-1.8	-1.8	2953	-3.1	-3.1	2909	-3.2	-3.2	7612	-3.4	-3.4	5890	-4.5	-4.5	8063	-4.5	-4.5	8209	-2.0	-2.0	5291	-3.2	-3.2	5835	-3.2	-3.2	6366	2.7	2.7
TD25	Track Dozer 25 (TMA -CAT D9)	7279	-3.9	-3.9	2864	-2.2	-2.2	2771	-3.4	-3.4	2822	-3.5	-3.5	7434	-3.6	-3.6	5921	-4.7	-4.7	8186	-4.7	-4.7	8297	-2.2	-2.2	5298	-3.4	-3.4	5864	-3.4	-3.4	6415	2.5	2.5
TD26	Track Dozer 26 (TMA -CAT D9)	7350	-4.1	-4.1	2758	-2.4	-2.4	2664	-3.6	-3.6	2750	-3.6	-3.6	7332	-3.7	-3.7	5968	-4.8	-4.8	8281	-4.8	-4.8	8375	-2.4	-2.4	5330	-3.5	-3.5	5909	-3.6	-3.6	6472	2.3	2.3
TD27	Track Dozer 27 (TMA -CAT D9)	7393	-4.3	-4.3	2674	-2.4	-2.4	2580	-3.7	-3.7	2709	-3.8	-3.8	7250	-3.8	-3.8	5992	-4.9	-4.9	8345	-4.9	-4.9	8424	-2.6	-2.6	5344	-3.6	-3.6	5932	-3.7	-3.7	6504	2.2	2.2
WD	Komatsu Wheel Dozer WD900	3224	1.2	1.2	5968	-3.6	-3.6	5961	-4.2	-4.2	6998	-4.3	-4.3	9711	-5.2	-5.2	2696	-5.6	-5.6	4073	-5.6	-5.6	4143	1.8	1.8	2799	-4.0	-4.0	2711	-4.1	-4.1	2768	1.9	1.9
WL1	Komatsu Wheel Loader WA1200	3385	-0.3	-0.3	5818	5.9	5.9	5810	5.5	5.5	6827	5.6	5.6	9598	3.7	3.7	2783	3.5	3.5	4236	3.5	3.5	4312	11.7	11.7	2831	1.0	1.0	2793	1.1	1.1	2892	10.3	10.3
WL2	CAT 994HL	3348	-1.1	-1.1	5837	1.5	1.5	5830	1.2	1.2	6860	1.2	1.2	9605	-3.2	-3.2	2750	-3.4	-3.4	4211	-3.4	-3.4	4278	3.9	3.9	2806	-5.6	-5.6	2761	-5.7	-5.7	2856	2.7	2.7
WL3	CAT 980H Wheel Loader	6015	14.5	14.5	4121	14.6	14.6	4058	14.5	14.5	4236	14.5	14.5	8548	13.6	13.6	4969	13.5	13.5	6696	13.5	13.5	6959	14.5	14.5	4553	14.4	14.4	4935	14.3	14.3	5328	14.7	14.7
WL4	CAT 980H Wheel Loader	6405	14.3	14.3	4143	14.2	14.2	4068	14.1	14.1	3934	14.1	14.1	8642	13.2	13.2	5388	13.1	13.1	7004	13.1	13.1	7331	14.0	14.0	4968	13.9	13.9	5354	13.9	13.9	5741	14.2	14.2
WL5	CAT 980H Wheel Loader	6727	13.8	13.8	3783	13.7	13.7	3701	13.6	13.6	3525	13.6	13.6	8317	12.7	12.7	5607	12.7	12.7	7405	12.7	12.7	7679	13.5	13.5	5123	13.5	13.5	5565	13.4	13.4	6003	13.7	13.7
WL6	CAT 980H Wheel Loader	5953	14.5	14.5	4105	14.6	14.6	4044	14.5	14.5	4280	14.5	14.5	8518	13.7	13.7	4896	13.6	13.6	6655	13.6	13.6	6902	14.5	14.5	4477	14.4	14.4	4861	14.4	14.4	5258	14.7	14.7
WP01	Water Pump WP01	3329	-17.3	-17.3	5923	-15.5	-15.5	5914	-16.3	-16.3	6909	-16.3	-16.3	9702	-12.6	-12.6	2797	-12.8	-12.8	4137	-12.8	-12.8	4241	-3.3	-3.3	2880	-13.2	-13.2	2811	-13.5	-13.5	2878	-4.0	-4.0
WP02	Water Pump WP02	3293	-18.4	-18.4	5984	-16.1	-16.1	5976	-17.0	-17.0	6961	-17.0	-17.0	9762	-17.2	-17.2	2801	-17.7	-17.7	4078	-17.7	-17.7	4195	-14.1	-14.1	2904	-14.5	-14.5	2817	-14.5	-14.5	2864	-5.2	-5.2
WP03	Water Pump WP03	3207	-17.7	-17.7	6057	-15.6	-15.6	6050	-16.5	-16.5	7050	-16.5	-16.5	9813	-17.1	-17.1	2751	-17.6	-17.6	3996	-17.6	-17.6	4106	-9.2	-9.2	2882	-16.3	-16.3	2770	-16.3	-16.3	2795	-9.0	-9.0
WP04	Water Pump WP04	3196	-16.7	-16.7	6055	-15.7	-15.7	6048	-16.5	-16.5	7056	-16.5	-16.5	9806	-17.3	-17.3	2735	-17.7	-17.7	3995	-17.8	-17.8	4097	-9.5	-9.5	2866	-16.3	-16.3	2754	-16.4	-16.4	2781	-9.3	-9.3
WP05	Water Pump WP05	3207	-11.1	-11.1	5982	-16.1	-16.1	5976	-17.0	-17.0	7015	-17.0	-17.0	9721	-17.8	-17.8	2686	-18.3	-18.3	4058	-18.3	-18.3	4126	-10.6	-10.6	2795	-16.5	-16.5	2702	-16.6	-16.6	2754	-10.4	-10.4
WP06	Water Pump WP06	3149	0.5	0.5	6083	-7.4	-7.4	6077	-7.7	-7.7	7098	-7.7	-7.7	9819	-11.0	-11.0	2697	-11.2	-11.2	3960	-11.2	-11.2	4052	-3.4	-3.4	2841	-11.5	-11.5	2718	-11.5	-11.5	2737	-3.5	-3.5
WP07	Water Pump WP07	3419	-16.9	-16.9	5821	-13.2	-13.2	5812	-13.7	-13.7	6806	-13.6	-13.6	9618	-6.7	-6.7	2831	-6.9	-6.9	4243	-6.8	-6.8	4339	0.8	0.8	2878	-9.3	-9.3	2841	-9.3	-9.3	2937	0.2	0.2
WP08	Water Pump WP08	3429	-15.3	-15.3	5793	-10.8	-10.8	5784	-11.2	-11.2	6787	-11.1	-11.1	9587	-6.0	-6.0	2822	-6.3	-6.3	4268	-6.2	-6.2	4355	0.8	0.8	2859	-9.3	-9.3	2831	-9.2	-9.2	2936	0.1	0.1

Table 8-2: Point of Reception Impact Summary- Steady Sources

New sources added or modified as part of this updated AAR are higlighted in green.

AAR ID	Description	POR14			POR15			POR16			POR17			POR19			POR20			POR21			POR22			POR23			POR24			POR25		
		Distance	Leq [D]	Leq [E/N]	Distance	Leq [D]	Leq [E/N]	Distance	Leq [D]	Leq [E/N]	Distance	Leq [D]	Leq [E/N]	Distance	Leq [D]	Leq [E/N]	Distance	Leq [D]	Leq [E/N]	Distance	Leq [D]	Leq [E/N]	Distance	Leq [D]	Leq [E/N]	Distance	Leq [D]	Leq [E/N]	Distance	Leq [D]	Leq [E/N]	Distance	Leq [D]	Leq [E/N]
		m	dBA	dBA	m	dBA	dBA	m	dBA	dBA	m	dBA	dBA	m	dBA	dBA	m	dBA	dBA	m	dBA	dBA	m	dBA	dBA	m	dBA	dBA	m	dBA	dBA	m	dBA	dBA
WP09	Water Pump WP09	2996	-1.8	-1.8	5874	1.4	1.4	5878	0.0	0.0	7126	-0.1	-0.1	9466	0.1	0.1	2266	-1.3	-1.3	4130	-1.3	-1.3	3992	2.0	2.0	2353	0.6	0.6	2276	0.5	0.5	2397	2.6	2.6
WP10	Water Pump WP10	2758	-1.0	-1.0	5699	2.9	2.9	5689	1.5	1.5	6683	1.4	1.4	9476	1.5	1.5	2571	0.1	0.1	3234	0.0	0.0	3578	3.6	3.6	2663	2.1	2.1	2589	2.0	2.0	2531	4.2	4.2
WP11	Water Pump WP11	2629	0.9	0.9	5827	4.7	4.7	5823	3.4	3.4	6923	3.3	3.3	9545	3.0	3.0	2571	1.7	1.7	1941	1.7	1.7	2886	5.1	5.1	2663	3.8	3.8	2589	3.7	3.7	2531	5.7	5.7
WP12	Water Pump WP12	2757	-3.8	-3.8	5826	-1.3	-1.3	5822	-2.4	-2.4	6923	-2.5	-2.5	9544	-2.1	-2.1	2573	-3.3	-3.3	2149	-3.3	-3.3	3280	-0.5	-0.5	2663	-1.8	-1.8	2590	-1.8	-1.8	2533	0.0	0.0
WP13	Water Pump WP13	2936	-3.5	-3.5	3874	-0.9	-0.9	3842	-2.1	-2.1	4761	-2.2	-2.2	8059	-1.9	-1.9	2447	-3.1	-3.1	3776	-3.1	-3.1	3837	-0.3	-0.3	2469	-1.6	-1.6	2458	-1.6	-1.6	2530	0.2	0.2
WP14	Water Pump WP14	2937	-2.8	-2.8	4432	-1.4	-1.4	4400	-2.0	-2.0	5166	-2.0	-2.0	8591	-2.6	-2.6	2446	-2.8	-2.8	3776	-2.8	-2.8	3837	-1.4	-1.4	2468	-1.6	-1.6	2458	-1.7	-1.7	2530	-1.0	-1.0
WP15	Water Pump WP15	2758	-2.7	-2.7	5699	-1.3	-1.3	5689	-1.9	-1.9	6683	-2.0	-2.0	9476	-2.5	-2.5	2571	-2.8	-2.8	3234	-2.8	-2.8	3578	-1.3	-1.3	2663	-1.6	-1.6	2589	-1.6	-1.6	2531	2.9	2.9
WP16	Water Pump WP16	2629	1.2	1.2	5827	3.3	3.3	5823	2.5	2.5	6923	2.4	2.4	9545	1.4	1.4	2571	0.9	0.9	1941	0.9	0.9	2886	3.0	3.0	2663	2.4	2.4	2589	2.4	2.4	2531	3.3	3.3
WP17	Water Pump WP17	2757	-1.0	-1.0	5826	0.0	0.0	5822	-0.6	-0.6	6923	-0.6	-0.6	9544	-1.4	-1.4	2573	-1.8	-1.8	2149	-1.9	-1.9	3280	-0.1	-0.1	2663	-0.6	-0.6	2590	-0.7	-0.7	2533	0.1	0.1
WP18	Water Pump WP18	2936	-4.5	-4.5	3874	-3.3	-3.3	3842	-3.5	-3.5	4761	-3.6	-3.6	8059	-3.9	-3.9	2447	-4.0	-4.0	3776	-4.0	-4.0	3837	-2.7	-2.7	2469	-2.8	-2.8	2458	-2.8	-2.8	2530	-2.3	-2.3
WP19	Water Pump WP19	2937	0.3	0.3	4432	3.6	3.6	4400	2.2	2.2	5166	2.1	2.1	8591	1.3	1.3	2446	-0.1	-0.1	3776	-0.1	-0.1	3837	2.8	2.8	2468	1.3	1.3	2458	1.3	1.3	2530	2.9	2.9
WS	Wet Scrubber	2758	4.7	4.7	5699	7.9	7.9	5689	5.6	5.6	6683	5.4	5.4	9476	4.8	4.8	2571	2.0	2.0	3234	2.0	2.0	3578	6.5	6.5	2663	3.8	3.8	2589	3.7	3.7	2531	6.6	6.6
MGR_OPMill	Motor Grader Route Open Pit to Mill	2758	2.8	2.8	5699	6.5	6.5	5689	5.2	5.2	6683	5.1	5.1	9476	4.4	4.4	2571	3.5	3.5	3234	3.5	3.5	3578	5.9	5.9	2663	5.0	5.0	2589	5.0	5.0	2531	6.2	6.2
MGR_SP	Motor Grader Route Stockpile	2758	5.6	5.6	5699	9.4	9.4	5689	8.1	8.1	6683	8.0	8.0	9476	6.8	6.8	2571	5.8	5.8	3234	5.8	5.8	3578	8.6	8.6	2663	7.7	7.7	2589	7.6	7.6	2531	9.9	9.9
MGR_PAG	Motor Grader Route PAG	2757	5.3	5.3	5826	9.5	9.5	5822	8.3	8.3	6923	8.1	8.1	9544	6.8	6.8	2573	5.8	5.8	2149	5.7	5.7	3280	8.6	8.6	2663	7.6	7.6	2590	7.5	7.5	2533	8.8	8.8
MGR_NPAG	Motor Grader Route NPAG	2757	1.7	1.7	5826	4.8	4.8	5822	3.7	3.7	6923	3.6	3.6	9544	3.1	3.1	2573	2.5	2.5	2149	2.4	2.4	3280	4.8	4.8	2663	4.1	4.1	2590	4.1	4.1	2533	6.1	6.1
MGR_OB	Motor Grader Route OB	2757	1.8	1.8	5826	4.9	4.9	5822	3.7	3.7	6923	3.7	3.7	9544	3.2	3.2	2573	2.5	2.5	2149	2.5	2.5	3280	4.8	4.8	2663	4.2	4.2	2590	4.1	4.1	2533	5.2	5.2
TRE_OP-Mill	Truck Route Open Pit to Mill (Empty Truck)	2937	3.1	3.1	4432	5.7	5.7	4400	5.0	5.0	5166	4.9	4.9	8591	4.0	4.0	2446	3.5	3.5	3776	3.5	3.5	3837	5.3	5.3	2468	4.8	4.8	2458	4.7	4.7	2530	5.6	5.6
TRE_OP-LGO	Truck Route Open Pit to LGO (Empty Truck)	2758	2.7	2.7	5699	5.3	5.3	5689	4.5	4.5	6683	4.4	4.4	9476	3.1	3.1	2571	2.5	2.5	3234	2.4	2.4	3578	4.7	4.7	2663	4.1	4.1	2589	4.0	4.0	2531	5.9	5.9
TRE_OP-PAG	Truck Route Open Pit to PAG (Empty Truck)	2758	9.4	9.4	5699	12.6	12.6	5689	11.8	11.8	6683	11.7	11.7	9476	10.4	10.4	2571	9.8	9.8	3234	9.7	9.7	3578	11.9	11.9	2663	11.3	11.3	2589	11.2	11.2	2531	12.1	12.1
TRE_OP-NPAG	Truck Route Open Pit to NPAG (Empty Truck)	2758	4.9	4.9	5699	7.0	7.0	5689	6.4	6.4	6683	6.3	6.3	9476	5.7	5.7	2571	5.4	5.4	3234	5.4	5.4	3578	7.2	7.2	2663	6.8	6.8	2589	6.8	6.8	2531	8.6	8.6
TRE_OP-OB	Truck Route Open Pit to Overburden (Empty Truck)	2758	-2.4	-2.4	5699	-0.3	-0.3	5689	-0.9	-0.9	6683	-1.0	-1.0	9476	-1.6	-1.6	2571	-2.0	-2.0	3234	-2.0	-2.0	3578	-0.2	-0.2	2663	-0.5	-0.5	2589	-0.6	-0.6	2531	0.1	0.1
TRE_OP-TMA	Truck Route Open Pit to TMA Staging Area (Empty Truck)	2629	2.1	2.1	5827	4.1	4.1	5823	3.5	3.5	6923	3.4	3.4	9545	2.8	2.8	2571	2.4	2.4	1941	2.4	2.4	2886	4.2	4.2	2663	3.8	3.8	2589	3.8	3.8	2531	4.5	4.5
TRE_TMA1	Truck Route TMA Staging Area to TMA Dam (Empty Truck)	2757	-1.7	0.0	5826	-0.8	0.0	5822	-1.4	0.0	6923	-1.4	0.0	9544	-1.9	0.0	2573	-2.5	0.0	2149	-2.6	0.0	3280	-0.9	0.0	2663	-1.5	0.0	2590	-1.6	0.0	2533	1.1	0.0
TRE_TMA2	Truck Route TMA Staging Area to TMA Dam (Empty Truck)	2936	-1.5	-1.5	3874	-0.9	-0.9	3842	-1.4	-1.4	4761	-1.5	-1.5	8059	-2.3	-2.3	2447	-2.9	-2.9	3776	-2.9	-2.9	3837	-1.4	-1.4	2469	-1.9	-1.9	2458	-1.9	-1.9	2530	-1.2	-1.2
TRL_OP-Mill	Truck Route Open Pit to Mill (Loaded Truck)	2758	17.9	17.9	5699	19.8	19.8	5689	19.5	19.5	6683	19.5	19.5	9476	18.4	18.4	2571	18.2	18.2	3234	18.2	18.2	3578	19.5	19.5	2663	19.3	19.3	2589	19.3	19.3	2531	19.8	19.8
TRL_OP-LGO	Truck Route Open Pit to LGO (Loaded Truck)	2758	17.1	17.1	5699	19.0	19.0	5689	18.7	18.7	6683	18.7	18.7	9476	17.2	17.2	2571	17.0	17.0	3234	17.0	17.0	3578	18.6	18.6	2663	18.4	18.4	2589	18.4	18.4	2531	19.6	19.6
TRL_OP-PAG	Truck Route Open Pit to PAG (Loaded Truck)	2758	24.0	24.0	5699	26.3	26.3	5689	26.1	26.1	6683	26.0	26.0	9476	24.5	24.5	2571	24.3	24.3	3234	24.3	24.3	3578	25.9	25.9	2663	25.7	25.7	2589	25.6	25.6	2531	26.1	26.1
TRL_OP-NPAG	Truck Route Open Pit to NPAG (Loaded Truck)	2758	19.9	19.9	5699	21.3	21.3	5689	21.1	21.1	6683	21.1	21.1	9476	20.3	20.3	2571	20.2	20.2	3234	20.2	20.2	3578	21.6	21.6	2663	21.6	21.6	2589	21.5	21.5	2531	22.9	22.9
TRL_OP-OB	Truck Route Open Pit to Overburden (Loaded Truck)	2758	12.6	12.6	5699	14.0	14.0	5689	13.8	13.8	6683	13.7	13.7	9476	13.0	13.0	2571	12.9	12.9	3234	12.8	12.8	3578	14.3	14.3	2663	14.2	14.2	2589	14.2	14.2	2531	14.6	14.6
TRL_OP-TMA	Truck Route Open Pit to TMA Staging Area (Loaded Truck)	2758	17.1	17.1	5699	18.4	18.4	5689	18.2	18.2	6683	18.2	18.2	9476	17.4	17.4	2571	17.3	17.3	3234	17.3	17.3	3578	18.7	18.7	2663	18.6	18.6	2589	18.5	18.5	2531	19.0	19.0
TRL_TMA1	Truck Route TMA Staging Area to TMA Dam	2757	-1.7	0.0	5826	-0.8	0.0	5822	-1.4	0.0	6923	-1.4	0.0	9544	-1.9	0.0	2573	-2.5	0.0	2149	-2.6	0.0	3280	-0.9	0.0	2663	-1.5	0.0	2590	-1.6	0.0	2533	1.1	0.0
TRL_TMA2	Truck Route TMA Staging Area to TMA Dam	2757	-1.5	-1.5	5826	-0.9	-0.9	5822	-1.4	-1.4	6923	-1.5	-1.5	9544	-2.3	-2.3	2573	-2.9	-2.9	2149	-2.9	-2.9	3280	-1.4	-1.4	2663	-1.9	-1.9	2590	-1.9	-1.9	2533	-1.2	-1.2
WTR_OPMill	Water Truck Route Open Pit to Mill	2757	0.0	0.0	5826	4.3	4.3	5822	3.0	3.0	6923	2.9	2.9	9544	1.9	1.9	2573	0.9	0.9	2149	0.9	0.9	3280	3.6	3.6	2663	2.7	2.7	2590	2.6	2.6	2533	4.0	4.0
WTR_SP	Water Truck Route Stockpile	4302	3.4	3.4	7158	7.6	7.6	7118	6.4	6.4	7284	6.2	6.2	11297	4.7	4.7	4530	3.6	3.6	3901	3.5	3.5	4826	6.7	6.7	4775	5.7	5.7	4568	5.6	5.6	4381	8.1	8.1
WTR_PAG	Water Truck Route PAG	4135	3.0	3.0	7230	7.7	7.7	7193	6.5	6.5	7423	6.4	6.4	11331	4.7	4.7	4413	3.5	3.5	3727	3.5	3.5	4648	6.7	6.7	4689	5.6	5.6	4455	5.5	5.5	4243	6.9	6.9
WTR_NPAG	Water Truck Route NPAG	4120	-1.3	-1.3	7227	2.4	2.4	7190	1.1	1.1	7427	1.0	1.0	11324	0.5	0.5	4398	-0.4	-0.4	3717	-0.4	-0.4	4634	2.3	2.3	4675	1.5	1.5	4440	1.4	1.4	4227	3.6	3.6
WTR_OB	Water Truck Route OB	0	-1.2	-1.2	0	2.5	2.5	0	1.1	1.1	0	1.0	1.0	0	0.5	0.5	0	-0.4	-0.4	0	-0.4	-0.4	0	2.3	2.3	0	1.5	1.5	0	1.5	1.5	0	2.8	2.8
Total SPL at POR [dBA]			44	39		40	39		40	40		40	40		32	32		42	39		44	38		42	36		42	40		32	39		43	40
MECP Sound Level Limit [dBA]			45	40		45	40		45	40		45	40		45	40		45	40		45	40		45	40		45	40		45	40		45	40
Excess [dBA]			**-3**	**-1**		**-2**	**0**		**-2**	**0**		**4**	**4**		**-14**	**-9**		**-2**	**-1**		**-3**	**0**		**-7**	**-4**		**-3**	**-1**		**-2**	**-1**		**-2**	**-1**

Table 8-3: Point of Reception Impact Summary- Emergency Equipment

AAR ID	Description	POR1			POR2			POR3			POR4			POR6			POR7			POR8			POR9			POR10			POR11			POR12		
		Distance	Leq [D]	Leq [E/N]	Distance	Leq [D]	Leq [E/N]	Distance	Leq [D]	Leq [E/N]	Distance	Leq [D]	Leq [E/N]	Distance	Leq [D]	Leq [E/N]	Distance	Leq [D]	Leq [E/N]	Distance	Leq [D]	Leq [E/N]	Distance	Leq [D]	Leq [E/N]	Distance	Leq [D]	Leq [E/N]	Distance	Leq [D]	Leq [E/N]	Distance	Leq [D]	Leq [E/N]
		m	dBA	dBA	m	dBA	dBA	m	dBA	dBA	m	dBA	dBA	m	dBA	dBA	m	dBA	dBA	m	dBA	dBA	m	dBA	dBA	m	dBA	dBA	m	dBA	dBA	m	dBA	dBA
EG1	Emergency Generator 1 (CAT 2.5 MW)	4857	39.0	N/A	4758	35.4	N/A	4925	35.0	N/A	4809	35.3	N/A	5057	34.9	N/A	6123	32.7	N/A	5650	33.7	N/A	5615	33.8	N/A	5174	34.8	N/A	4956	35.2	N/A	4503	36.4	N/A
EG2	Emergency Generator 2 (CAT 2.5 MW)	4870	39.0	N/A	4760	35.4	N/A	4925	35.0	N/A	4808	35.3	N/A	5048	34.9	N/A	6111	32.7	N/A	5637	33.7	N/A	5602	33.8	N/A	5160	34.8	N/A	4942	36.1	N/A	4489	37.4	N/A
FP1	Fire Pump 1	5050	41.5	N/A	4718	40.6	N/A	4857	40.4	N/A	4733	40.3	N/A	4891	39.8	N/A	5936	35.3	N/A	5458	37.2	N/A	5422	37.0	N/A	4980	38.4	N/A	4764	38.9	N/A	4313	40.5	N/A
FP2	Fire Pump 2	5063	41.5	N/A	4724	40.6	N/A	4861	40.4	N/A	4737	40.3	N/A	4885	39.8	N/A	5927	35.2	N/A	5447	36.7	N/A	5410	36.5	N/A	4967	37.8	N/A	4750	37.8	N/A	4299	38.4	N/A
Total SPL at POR [dBA]			46	N/A		45	N/A		45	N/A		45	N/A		44	N/A		40	N/A		42	N/A		42	N/A		43	N/A		43	N/A		44	N/A
MECP Sound Level Limit [dBA]			50	N/A		50	N/A		50	N/A		50	N/A		50	N/A		50	N/A		50	N/A		50	N/A		50	N/A		50	N/A		50	N/A
Excess [dBA]			**-4**	N/A		**-5**	N/A		**-5**	N/A		**-5**	N/A		**-6**	N/A		**-10**	N/A		**-8**	N/A		**-8**	N/A		**-7**	N/A		**-7**	N/A		**-6**	N/A

AAR ID	Description	POR14			POR15			POR16			POR17			POR19			POR20			POR21			POR22			POR23			POR24			POR25		
		Distance	Leq [D]	Leq [E/N]	Distance	Leq [D]	Leq [E/N]	Distance	Leq [D]	Leq [E/N]	Distance	Leq [D]	Leq [E/N]	Distance	Leq [D]	Leq [E/N]	Distance	Leq [D]	Leq [E/N]	Distance	Leq [D]	Leq [E/N]	Distance	Leq [D]	Leq [E/N]	Distance	Leq [D]	Leq [E/N]	Distance	Leq [D]	Leq [E/N]	Distance	Leq [D]	Leq [E/N]
		m	dBA	dBA	m	dBA	dBA	m	dBA	dBA	m	dBA	dBA	m	dBA	dBA	m	dBA	dBA	m	dBA	dBA	m	dBA	dBA	m	dBA	dBA	m	dBA	dBA	m	dBA	dBA
EG1	Emergency Generator 1 (CAT 2.5 MW)	4317	37.2	N/A	7158	35.2	N/A	7118	35.2	N/A	7277	32.3	N/A	11300	28.1	N/A	4543	36.3	N/A	3913	38.4	N/A	4840	35.5	N/A	4786	35.6	N/A	4581	36.2	N/A	4395	37.1	N/A
EG2	Emergency Generator 2 (CAT 2.5 MW)	4302	37.0	N/A	7158	35.4	N/A	7118	35.5	N/A	7284	32.4	N/A	11297	28.1	N/A	4530	36.3	N/A	3901	38.4	N/A	4826	36.4	N/A	4775	35.7	N/A	4568	36.3	N/A	4381	37.1	N/A
FP1	Fire Pump 1	4135	41.3	N/A	7230	33.5	N/A	7193	33.5	N/A	7423	29.8	N/A	11331	23.8	N/A	4413	40.5	N/A	3727	43.5	N/A	4648	39.1	N/A	4689	43.9	N/A	4455	40.4	N/A	4243	41.5	N/A
FP2	Fire Pump 2	4120	39.2	N/A	7227	33.5	N/A	7190	33.5	N/A	7427	29.8	N/A	11324	23.8	N/A	4398	39.6	N/A	3717	39.9	N/A	4634	37.8	N/A	4675	43.9	N/A	4440	39.5	N/A	4227	40.6	N/A
Total SPL at POR [dBA]			45	N/A		41	N/A		41	N/A		37	N/A		32	N/A		45	N/A		47	N/A		43	N/A		48	N/A		45	N/A		46	N/A
MECP Sound Level Limit [dBA]			50	N/A		50	N/A		50	N/A		50	N/A		50	N/A		50	N/A		50	N/A		50	N/A		50	N/A		50	N/A		50	N/A
Excess [dBA]			**-5**	N/A		**-9**	N/A		**-9**	N/A		**-13**	N/A		**-18**	N/A		**-5**	N/A		**-3**	N/A		**-7**	N/A		**-2**	N/A		**-5**	N/A		**-4**	N/A

Table 8-4: Acoustic Assessment Summary Table - Steady Sources

Point of Reception ID	Description of Reception Point [a]	Site L_{eq} (dBA)			Verified by Acoustic Audit	Performance Limits (dBA)			Compliance with Performance Limit
		Day	Evening	Night		Day	Evening	Night	
POR1	House 01 – North - 2nd Storey POR	39	39	39	No	45	40	40	Yes
POR2	House 02 – East - 2nd Storey POR	35	32	32	No	45	40	40	Yes
POR3	House 03 – East - 2nd Storey POR	34	32	32	No	45	40	40	Yes
POR4	House 04 – East - 2nd Storey POR	35	33	33	No	45	40	40	Yes
POR6	House 06 – Southeast - 2nd Storey POR	37	34	34	No	45	40	40	Yes
POR7	House 07 – South - 2nd Storey POR	34	31	31	No	45	40	40	Yes
POR8	House 08 – South - 2nd Storey POR	36	33	33	No	45	40	40	Yes
POR9	House 09 – South - 2nd Storey POR	39	33	33	No	45	40	40	Yes
POR10	House 10 – South - 2nd Storey POR	41	35	35	No	45	40	40	Yes
POR11	House 11 – South - 2nd Storey POR	42	37	37	No	45	40	40	Yes
POR12	House 12 – South - 2nd Storey POR	44	38	38	No	45	40	40	Yes
POR14	House 14 – South - 2nd Storey POR	45	40	40	No	45	40	40	Yes
POR15	House 15 – West - 2nd Storey POR	40	39	39	No	45	40	40	Yes
POR16	House 16 – West - 2nd Storey POR	40	40	40	No	45	40	40	Yes
POR17	House 17 – Northwest - 2nd Storey POR	40	40	40	No	45	40	40	Yes
POR19	Vacant Lot Near Pinewood River	32	32	32	No	45	40	40	Yes
POR20	Vacant Lot 56041-0138	42	40	40	No	45	40	40	Yes
POR21	Vacant Lot 56036-0023	45	39	39	No	45	40	40	Yes
POR22	Vacant Lot 56036-0184	42	37	37	No	45	40	40	Yes
POR23	Vacant Lot 56041-0037	42	40	40	No	45	40	40	Yes
POR24	Vacant Lot 56041-0135	42	40	40	No	45	40	40	Yes
POR25	Vacant Lot 56041-0139	43	40	40	No	45	40	40	Yes

N/A [a] For each of the existing dwellings, the Acoustic Assessment Summary Table only provides the noise impacts at the most impacted reception point, which is the 2nd storey plane of window reception points; the noise impacts at the other reception points for the existing dwellings (i.e. outdoor and 1st storey reception points) are lower than the impacts at the 2nd storey reception point and are therefore not shown in this table.

Table 8-5: Acoustic Assessment Summary Table - Steady Sources

Point of Reception ID	Description of Reception Point [a]	Site L_{eq} (dBA)			Verified by Acoustic Audit	Performance Limits (dBA)			Compliance with Performance Limit
		Day	Evening	Night		Day	Evening	Night	
POR1	House 01 – North - 2nd Storey POR	46	N/A [b]	N/A [b]	No	50	N/A [b]	N/A [b]	Yes
POR2	House 02 – East - 2nd Storey POR	45	N/A [b]	N/A [b]	No	50	N/A [b]	N/A [b]	Yes
POR3	House 03 – East - 2nd Storey POR	45	N/A [b]	N/A [b]	No	50	N/A [b]	N/A [b]	Yes
POR4	House 04 – East - 2nd Storey POR	45	N/A [b]	N/A [b]	No	50	N/A [b]	N/A [b]	Yes
POR6	House 06 – Southeast - 2nd Storey POR	44	N/A [b]	N/A [b]	No	50	N/A [b]	N/A [b]	Yes
POR7	House 07 – South - 2nd Storey POR	40	N/A [b]	N/A [b]	No	50	N/A [b]	N/A [b]	Yes
POR8	House 08 – South - 2nd Storey POR	42	N/A [b]	N/A [b]	No	50	N/A [b]	N/A [b]	Yes
POR9	House 09 – South - 2nd Storey POR	42	N/A [b]	N/A [b]	No	50	N/A [b]	N/A [b]	Yes
POR10	House 10 – South - 2nd Storey POR	43	N/A [b]	N/A [b]	No	50	N/A [b]	N/A [b]	Yes
POR11	House 11 – South - 2nd Storey POR	43	N/A [b]	N/A [b]	No	50	N/A [b]	N/A [b]	Yes
POR12	House 12 – South - 2nd Storey POR	44	N/A [b]	N/A [b]	No	50	N/A [b]	N/A [b]	Yes
POR14	House 14 – South - 2nd Storey POR	45	N/A [b]	N/A [b]	No	50	N/A [b]	N/A [b]	Yes
POR15	House 15 – West - 2nd Storey POR	41	N/A [b]	N/A [b]	No	50	N/A [b]	N/A [b]	Yes
POR16	House 16 – West - 2nd Storey POR	41	N/A [b]	N/A [b]	No	50	N/A [b]	N/A [b]	Yes
POR17	House 17 – Northwest - 2nd Storey POR	37	N/A [b]	N/A [b]	No	50	N/A [b]	N/A [b]	Yes
POR19	Vacant Lot Near Pinewood River	32	N/A [b]	N/A [b]	No	50	N/A [b]	N/A [b]	Yes
POR20	Vacant Lot 56041-0138	45	N/A [b]	N/A [b]	No	50	N/A [b]	N/A [b]	Yes
POR21	Vacant Lot 56036-0023	47	N/A [b]	N/A [b]	No	50	N/A [b]	N/A [b]	Yes
POR22	Vacant Lot 56036-0184	43	N/A [b]	N/A [b]	No	50	N/A [b]	N/A [b]	Yes
POR23	Vacant Lot 56041-0037	48	N/A [b]	N/A [b]	No	50	N/A [b]	N/A [b]	Yes
POR24	Vacant Lot 56041-0135	45	N/A [b]	N/A [b]	No	50	N/A [b]	N/A [b]	Yes
POR25	Vacant Lot 56041-0139	46	N/A [b]	N/A [b]	No	50	N/A [b]	N/A [b]	Yes

N/A [a] For each of the existing dwellings, the Acoustic Assessment Summary Table only provides the noise impacts at the most impacted reception point, which is the 2nd storey plane of window reception points; the noise impacts at the other reception points for the existing dwellings (i.e. outdoor and 1st storey reception points) are lower than the impacts at the 2nd storey reception point and are therefore not shown in this table.

N/A [b] Non-emergency operation of emergency equipment does not occur during evening and nighttime periods

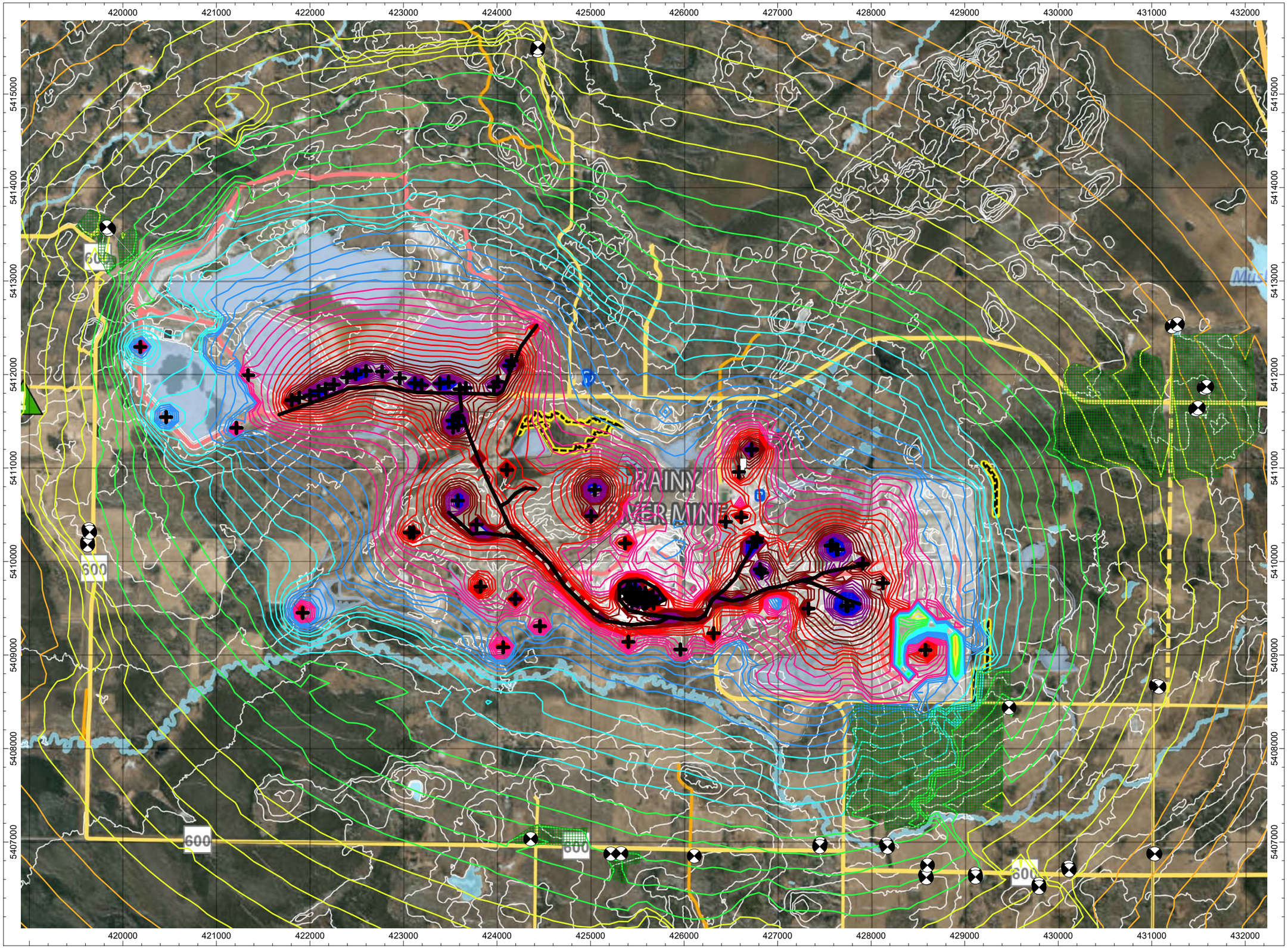

FIGURE 8-1

Sound Level Contours for
Worst-case 1-Hour
Daytime Period
at 4.5 m Above Grade

Acoustic Assessment Report

PROJECT SITE

New Gold Inc.
Rainy River Mine

LEGEND

- Point Source
- Line Source
- vert. Area Source
- Building
- Foliage
- Ground Absorption
- Receiver

SOUND LEVEL EQUIVALENT (Leq, dBA)

- 35.0 < ... <= 40.0
- 40.0 < ... <= 45.0
- 45.0 < ... <= 50.0
- 50.0 < ... <= 55.0
- 55.0 < ... <= 60.0
- 60.0 < ... <= 65.0
- 65.0 < ... <= 70.0
- 70.0 < ... <= 75.0
- 75.0 < ... <= 80.0
- 80.0 < ... <= 85.0
- 85.0 < ...

COMMENTS

N

Date:
April 2021

Project Number:
217201.0040

Drawn By:
R.S.

Trinity Consultants

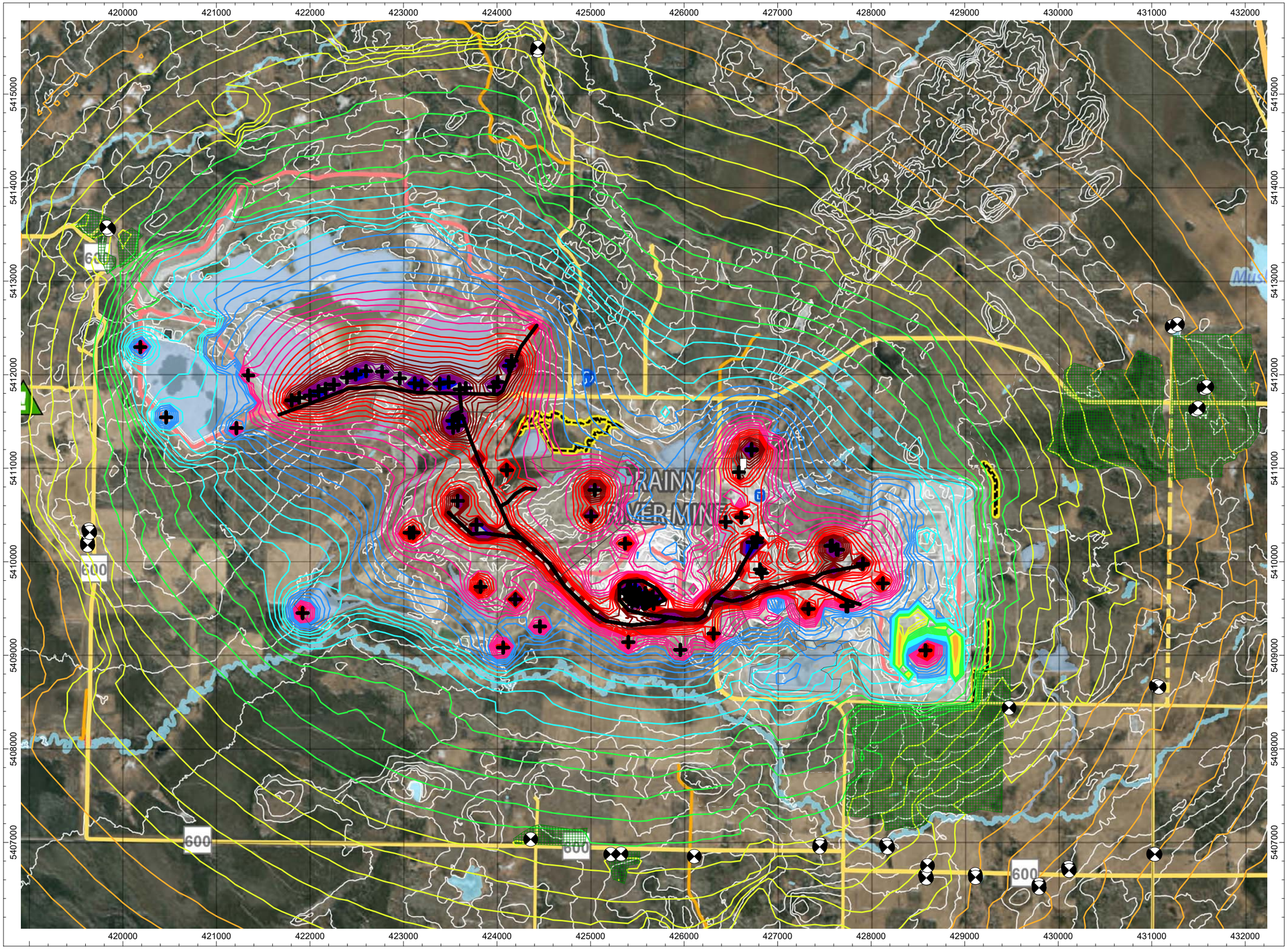

FIGURE 8-2

Sound Level Contours for
Worst-case 1-Hour
Evening and Nighttime Periods
at 4.5 m Above Grade

Acoustic Assessment Report

PROJECT SITE

New Gold Inc.
Rainy River Mine

LEGEND

- Point Source
- Line Source
- vert. Area Source
- Building
- Foliage
- Ground Absorption
- Receiver

SOUND LEVEL EQUIVALENT (Leq, dBA)

- 35.0 < ... <= 40.0
- 40.0 < ... <= 45.0
- 45.0 < ... <= 50.0
- 50.0 < ... <= 55.0
- 55.0 < ... <= 60.0
- 60.0 < ... <= 65.0
- 65.0 < ... <= 70.0
- 70.0 < ... <= 75.0
- 75.0 < ... <= 80.0
- 80.0 < ... <= 85.0
- 85.0 < ...

COMMENTS

N

Date:
April 2021

Project Number:
217201.0040

Drawn By:
R.S.

Trinity Consultants

APPENDIX A. PLANS & DRAWINGS

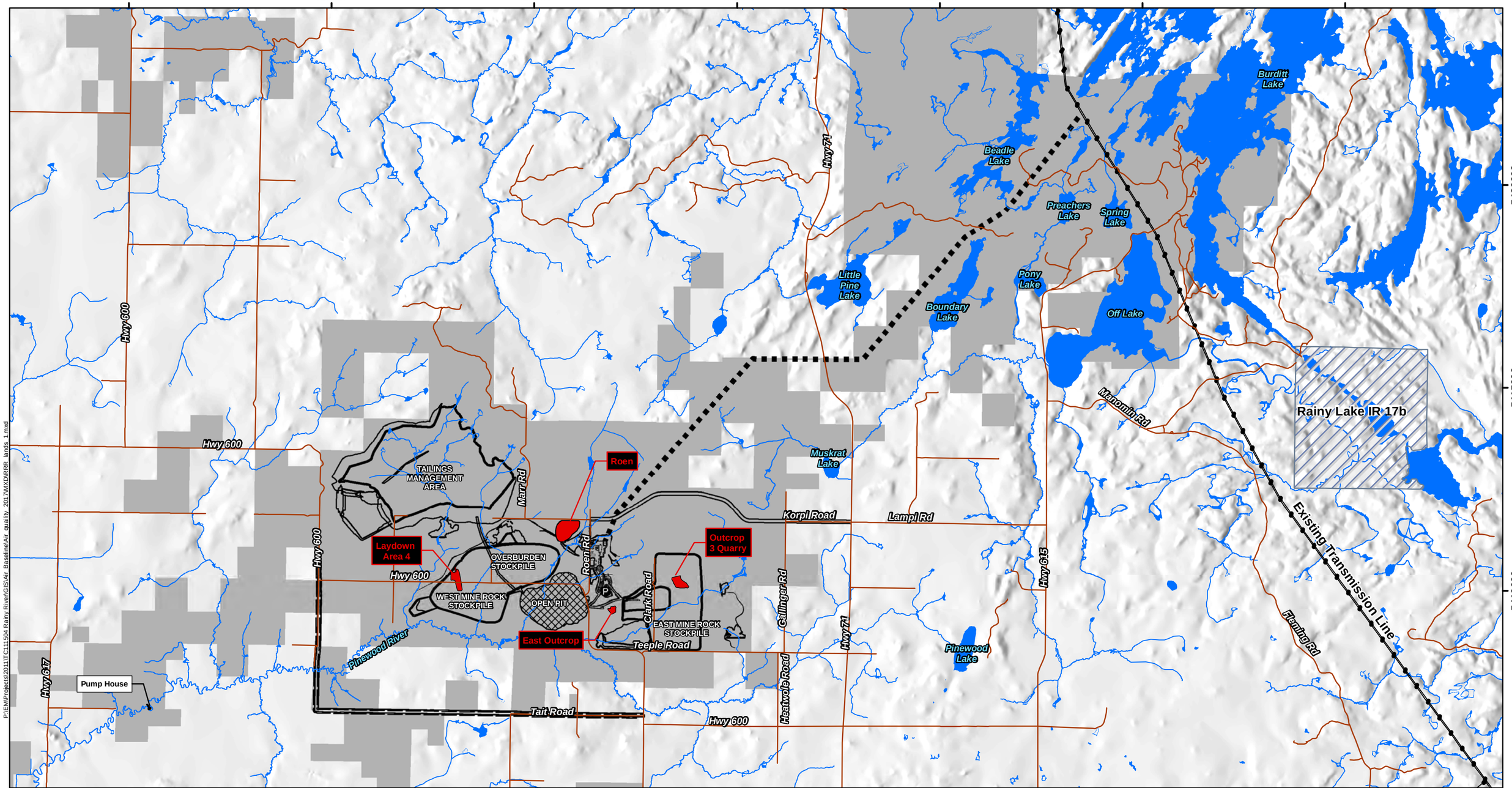

LEGEND

Site Features

- Underground Portal
- Open Pit
- Mine Site Infrastructure
- Site Roads
- Aggregate Pit / Quarry (labelled with name)
- RRP-NG Property Boundary
- Roads
- Existing Transmission Line
- First Nation Land

0 4 8 16 24 Kilometres

NOTES:
- Road and Utility data and topographic data extracted from Land Information Ontario, Ontario Road Network, MNR Queen's Printer for Ontario, 2011-2012
- Land tenure information and parcels provided by NewGold, October 2017.

Datum: NAD83
Projection: UTM Zone 15N

N W E S

newgold Rainy River Project

RAINY RIVER PROJECT

Site Plan

FIGURE: A-1

SCALE: 1:90,000

P:\EIA\Projects\2011\TC111504 Rainy River\GIS\Air Baseline\Air quality 2017\MXD\RRR lands 1.mxd

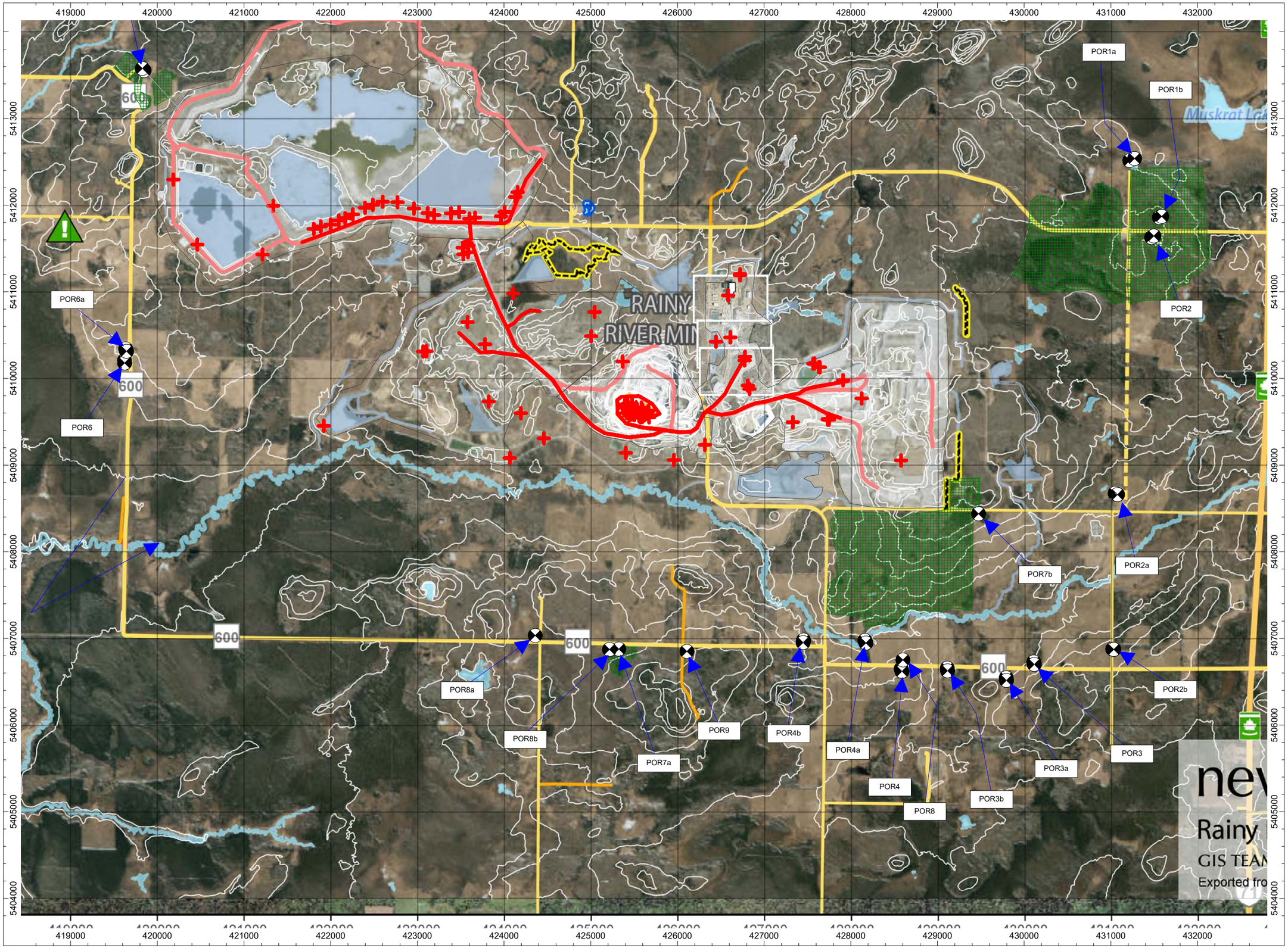

FIGURE A-2

Location of Sensitive Receptors

Acoustic Assessment Report
Updated for 2020 Operating Year

PROJECT SITE

New Gold Inc.
Rainy River Mine

LEGEND

- Point Source
- Line Source
- vert. Area Source
- Building
- Foliage
- Ground Absorption
- Receiver

COMMENTS

N

Date:
March 2021

Project Number:
217201.0040

Drawn By:
R.S.

Trinity Consultants

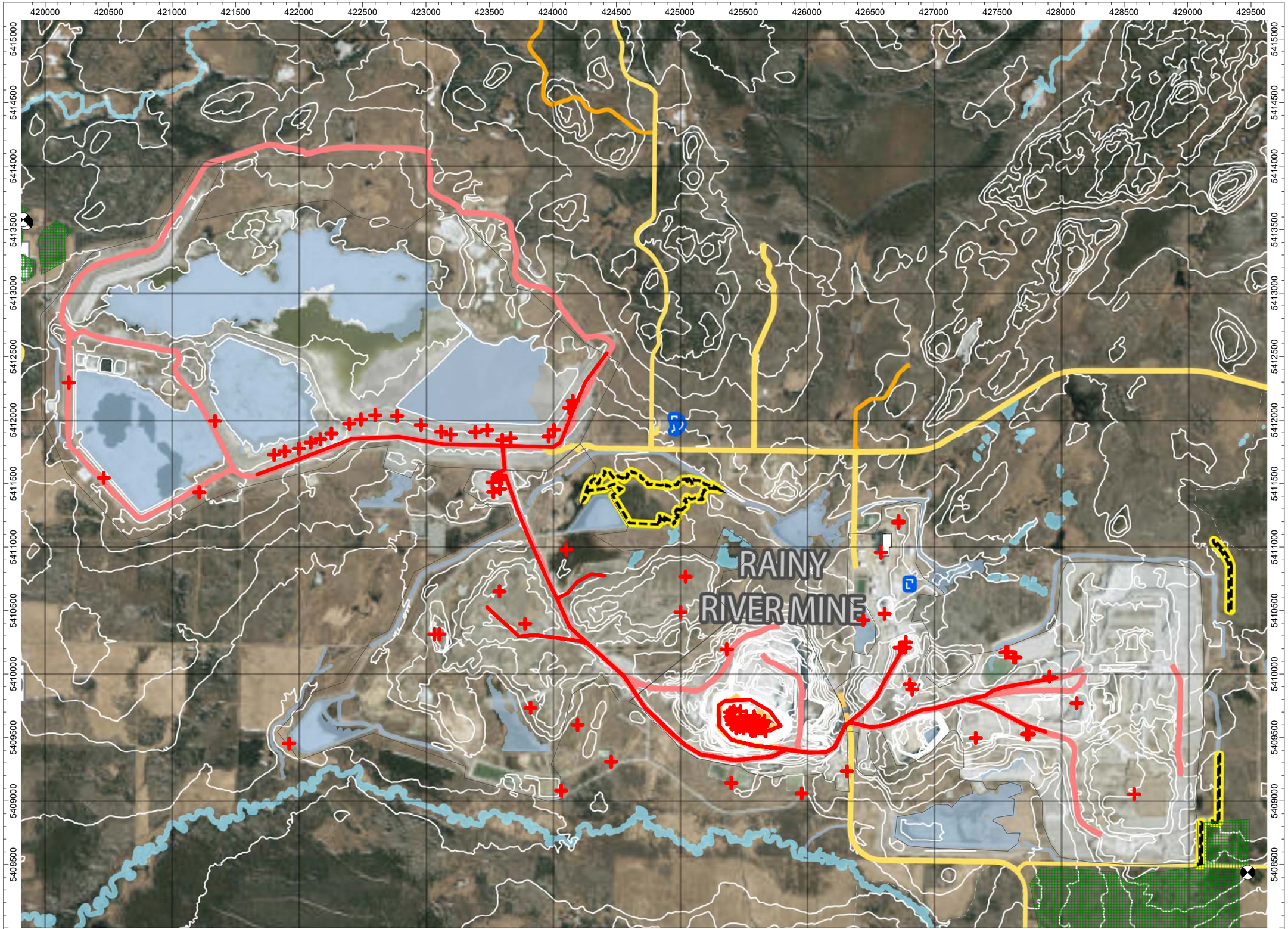

FIGURE A-3

Location of Significant Sources of Noise

Acoustic Assessment Report
April 2021 Update

PROJECT SITE

New Gold Inc.
Rainy River Mine

LEGEND

- Point Source
- Line Source
- vert. Area Source
- Building
- Foliage
- Ground Absorption
- Receiver

COMMENTS

N

Date:
April 2021

Project Number:
217201.0040

Drawn By:
R.S.

Trinity Consultants

TOWNSHIP OF CHAPPLE

ZONING BY-LAW SCHEDULE A

Council Adoption October 8, 2013

Village Settlement Area
Zone Boundary
A - Agricultural Zone
RU - Rural Zone
C1 - Highway Commercial Zone
I - Institutional
M1 - Industrial Zone
MX - Aggregate Extraction Zone
WD - Waste Disposal Zone
OS - Open Space Zone
CEP - Conservation and Environmental Protection Zone

Transportation
Provincial Highway
Township Roads
CN Railway

Watercourses

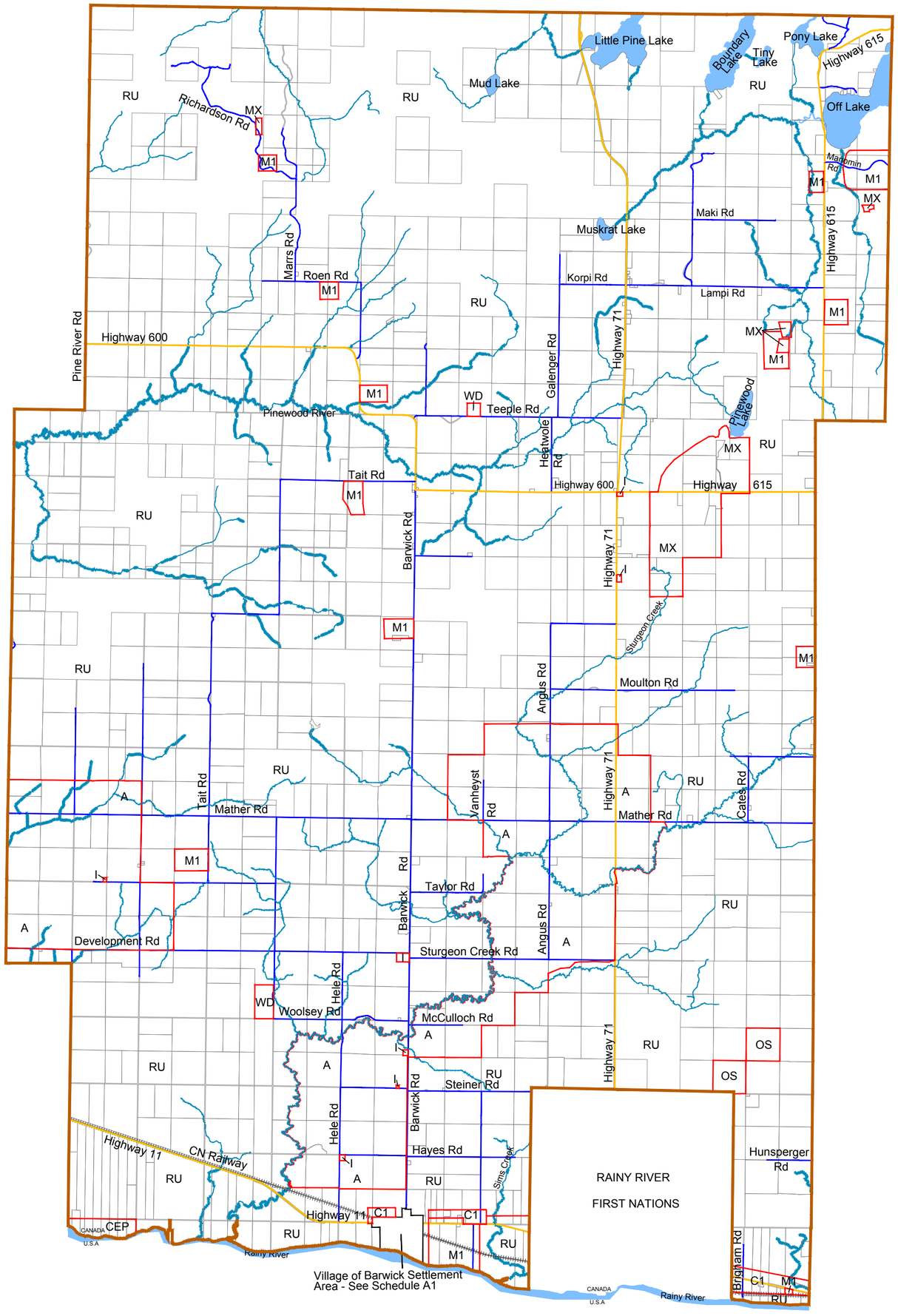

FOTENN PLANNING & URBAN DESIGN

Digital Map Created By:

CGIS Spatial Solutions
52 South Street
Perth, ON K7H 2G7
TEL: 613-368-4321
www.cgis.com

500m 1000m 1500m 2000m 2500m

Note: The base information on this plan was prepared from a variety of map sources and was used by permission of the Township of Chapple. It is not a legal plan of survey. For precise location of plan features recourse should be had to the original source data.

APPENDIX B. SLM SPECIFICATIONS

SoundExpert® LXT

Sound Level Meter

Designed for Professionals

LARSON DAVIS
A PCB PIEZOTRONICS DIV.

Phone 716.926.8243 Toll-Free in USA 888.258.3222

www.larsondavis.com

The All-In-One Sound Level Meter For The Noise Professional

Applications

- Product Noise Evaluation
- Production Line Acoustic Testing
- Site Assessment
- Attended Noise Measuring
- Environmental Noise Monitoring

Highlights

- Class 1 Sound Level Meter
- Random Incidence (RI) or Free Field (FF) microphones
- Complete firmware package
- 30 hours of operations using AA lithium batteries
- Rugged, compact, lightweight

Included Features & Capabilities

- Real-Time Octave Band Analysis (1/1 & 1/3)
- Time History Logging
- Community Noise Metrics
- 2GB Internal Memory
- Measurement History

Options

- Tripod (TRP001)
- Class 1 Calibrator (CAL200)
- Rugged Outdoor Case (EPS042)

SoundExpert LxT Sound Level Meter:

(LxT1-SE-FF or LxT1-SE-RI)

The Larson Davis SoundExpert LxT Sound Level Meter is a full-featured meter designed for general product evaluation and noise monitoring applications. SoundExpert LxT comes with a graphic display and a fixed set of firmware options applicable for these applications. It is available as a general hand-held meter or data acquisition tool and also in a short-term noise monitoring kit. The meter expands upon the Larson Davis tradition of delivering value, innovation and function in a rugged, single-handed package, and is backed by our 2-year factory warranty, 24-hour application support, and accredited factory service/calibration.

Compact, Portable & Lightweight
Designed For Rapid Deployment

Applications

- Mining Operations
- Construction Site Noise
- Wind Turbine Noise
- Motorsports
- Entertainment Events
- Industrial Operations
- Unattended Noise Monitoring

Highlights

- Complete noise measuring system
- Weatherpoof, lightweight, compact case (EPS042)
- 2 weeks of continuous operation with a D-cell battery pack (BAT015)
- Ideal to deploy, measure, download, then analyze
- Includes SoundExpert LxT

SoundExpert LxT Noise Monitoring Kit:

(NMS-SE-FF or NMS-SE-RI)

In addition to the SoundExpert LxT meter, this kit includes the EPS042 protection case and D-cell battery pack, the EPS2116 microphone protection shroud, and EXC010 10 ft. cable. Using D-cell alkaline batteries allows the noise monitor to be smaller and lighter; avoid the expense of shipping heavy lead acid batteries and the hassle of recharging. You can transport it easily to your site, deploy it, measure data, retrieve your system, download the data, and issue your report.

Options

- Tripod (TRP001)
- Class 1 calibrator (CAL200)
- DNA analysis software (SWW-DNA)
- LxT driver for DNA (SWW-DNA-LXT)

Application Solutions:

The SoundExpert LxT was specifically designed to provide a simple, easy-to-use meter and to provide professional measurements to support your Product Engineering or Basic Noise Monitoring needs. It comes configured with a fixed set of firmware options that will typically meet the needs of the professional engineer or consultant.

Product Engineering Applications

- Vehicle NVH Analysis
- Acoustic Target Setting and Evaluation
- Appliance Noise Testing
- Speaker Evaluation
- Production Line Acoustic Testing

Product Noise Evaluation

The SoundExpert LxT provides the functions, metrics, and accessories needed to help you develop quieter products. This instrument is well suited for acoustic development in the automotive, motorcycle, appliance, turbine, and speaker industries. Available with free field or random incidence microphones and with a detachable preamplifier and microphone that comes with extension cable options from 6 to 200 feet, this device makes noise measurement and recording simple and portable.

Production Line Acoustic Testing

Production line acoustic testing is necessary for qualifying and inspecting a wide range of products and sub-assemblies. The SoundExpert LxT meter provides an affordable method to measure noise for pass/fail assessments and for archiving for future traceability. This data can identify alignment errors, missing components, cracks, defects, and other anomalies. Octave band analysis can be used to get immediate diagnostic feedback on component failures to help identify root cause and eliminate warranty costs. This data can also be used to predict subjective customer perceptions and to set quality standards that drive product acceptance and differentiation.

Noise Monitoring

- Mining Industry
- Traffic
- Industrial Assessments
- Wind Turbine
- Construction Sites
- Public Venues
- Code Enforcement

Attended Noise Measuring

The SoundExpert LxT is your professional tool for hand-held or attended noise monitoring projects. It comes loaded with the firmware you need for logging, metrics, and octave band analysis and 2GB internal memory is standard. It's perfect for site assessments, compliance evaluations, and root cause investigations.

Short Term Monitoring Projects

When you need a simple and affordable noise monitoring solution for periods less than two weeks, the SoundExpert LxT, battery powered, monitoring kit is the perfect fit. It's small, lightweight, and easy to transport with a basic D-cell battery pack. Optional tripods and analysis software are available. Deploy it, measure it, retrieve, download your data, and issue the report!

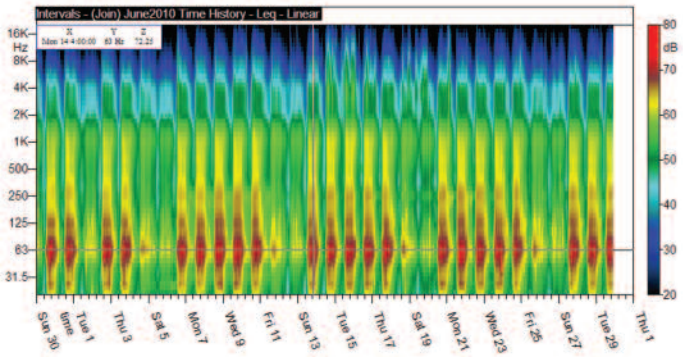

Environmental Noise Spectrogram from DNA

Data Navigation and Analysis Software (SWW-DNA)

Data Navigation and Analysis Software (SWW-DNA) is designed to analyze and report environmental noise, factory noise and product noise with an interactive graphical interface. DNA and the SoundExpert LxT can be used in two ways: DNA retrieves files from the SoundExpert LxT or DNA uses the SoundExpert LxT as a data acquisition front-end.

- Interactive graphs with data zoom, evaluate processing for events with linked cursors over several graphs
- Reprocess time history data to remove unwanted noise
- Customizable template-based operation

A major differentiating concept of DNA is the principle of separation of data and graphical layout. This allows for drag-and-drop functionality of new data in the same layout. With many environmental studies being similar in nature, this feature allows for quick, professional looking reports.

Software Development Kit (831-SDK)

The Software Development Kit for the SoundExpert LxT interfaces smoothly and directly with the Microsoft or Linux programming environments supporting Excel® VBA, C++, or C# programming languages.

The SDK provides functionality to establish connection and fully control the SoundExpert LxT over a USB connection. File download is supported and the SDK includes documentation and software for extracting data from files.

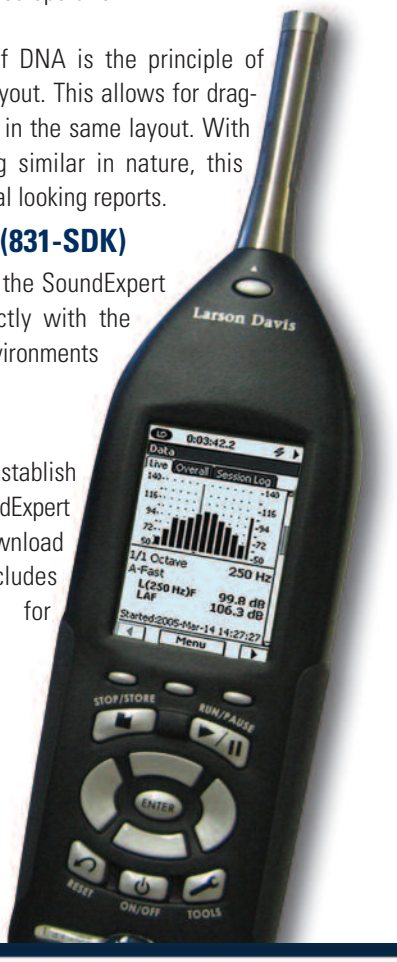

Software Solutions:

The SoundExpert LxT has numerous on-board capabilities, yet often further processing, visualization or reporting needs exist. For this purpose the SoundExpert LxT can be used as a portable instrument and retrieve the data, work as a data acquisition front-end, or in combination.

SLM Utility-G4

The SLM Utility-G4 program is included with your SoundExpert LxT and is an easy-to-use utility for managing and providing configuration set-up and data download. The Screengrabber feature emulates the SLM screen on your PC, convenient for presenting data stored on the SoundExpert LxT or for teaching classes. Measurement set-ups can be stored on the PC and exchanged with one or more sound level meters. Data can be downloaded into a PC and easily exported to Excel® for further analysis.

Microsoft, Visual Studio and Excel are registered trademarks of Microsoft Corporation in the United States and/or other countries.

SoundExpert LxT Features
Class 1 Precision Integrating Sound Level Meter
1/1 and 1/3 Octave filters
2GB internal, non-volatile memory
User defined Data Logging with selectable parameters and storage rate
Intervals (Measurement History) for a second independent data logger
LDEN and LDN community noise
High Contrast LCD display with LED backlight; sunlight readable
USB communication
Slow, Fast, or Impulse time weighting
A, C, and Z frequency weighting
Six (6) user defined statistic levels (Ln)
Battery life > 16 hours using 4 AA Alkaline batteries
AC and DC outputs
Multiple language support (English, German, French, Italian, Spanish, Portuguese, Swedish, Turkish)
Field upgradable firmware using SLM Utility G4
Removable Microphone and Preamplifier
Back erase -5 or -10 s
Two year limited warranty

SoundExpert LxT Specifications	
Averaging (Integration Method)	Linear or Exponential
RMS Time Weighting	Slow, Fast or Impulse
RMS Frequency Weighting	A, C or Z
Peak Frequency Weighting	A, C or Z
Sample Rate	51200 Hz
Peak Rise Time	≤ 30 µs
Range Level Error (OBA)	≤ ± 0.1 dB
Compliance	ANSI Type 1, IEC Class 1
Ranges	Singe Range for Broadband
	2 ranges for OBA
Maximum Clock Drift at 77 °F (25 °C)	< 2.6 s per day
1/1 and 1/3 Octave Filters	
1/1 Octave Filters	8 Hz to 16 kHz
1/3 Octave Filters	6.3 Hz to 20 kHz
Filter Selection	None, 1/1, 1/3, or 1/1 & 1/3
Frequency Weighting	A, C or Z (unweighted)
Maximum Spectrum	Maximum in each band or at broadband Lmax
Compliance	ANSI and IEC Class 1
Logging and Measurement History	
Logging Period	1 s to 24 hr
Logged Parameter	User selectable from Leq; Lmax; Lmin; LCSeq – LASeq; LAIeq – Laeq; 1/1 OBA Leq, Lmax, Lmin; 1/3 OBA Leq, Lmax, Lmin, Battery, Internal Temperature
Measurement History Period (Continuous run mode)	1 min to 24 hr
Measurement History Parameters	Leq; Lmin w/time; Lmax w/time; Lpeak w/time; Exceedance counts w/duration; LAeq, Lceq, 1/1 OBA Leq, Lmax, Lmin; 1/3 OBA Leq, Lmax, Lmin
Community Noise	
Measured Parameters	LDEN, LDN
Day, Evening, Night Times	Programmable
Evening and Night Penalty	Programmable
Time Averaged Level Integration Time	
Minimum	1 s
Maximum (error < 0.5 dB)	> 23 days
Ln Percentile	
Number of User Defined Ln's	6
Ln Resolution	0.01%
Distribution Table Resolution	0.1 dB
Markers	
Number of Markers	10
Predefined Markers	5
Measurement Modes	
Available Modes	Manual Stop, Timed Stop, Stop when Stable, Continuous, Single Block Timer, Daily Block Timer
Manual Stop	Measurement defined by run and stop button
Timed Stop	Time in hh:mm:ss
Stop When Stable	Change < xx.x dB for hh:mm:ss
Continuous	Auto file store 1, 2, 4, 6, 12, 24, 48, 96, 144 times per day
Single Block Timer	Start date and time to end date and time
Daily Block Timer	3 unique start/stop times per day, multiple days
AC/DC Output	
Connector	2.5 mm stereo
AC Output Maximum Voltage	± 2.3 V peak
AC Output Recommended Load	≥ 16 Ω
DC Output Resolution	10 mV/dB (0 to 100 dB)
DC Output Time Weighting	Follows SLM Setting (F, S, I)
DC Output Frequency Weighting	Follows SLM Setting (A, C, Z)
Dynamic Range (typical)	
A Weighted	17 dB to 118 dB
C Weighted	19 dB to 118 dB
Z Weighted	24 dB to 118 dB

Power	
Batteries	4-AA (LR6) 1.5 V Lithium or Alkaline
External Power	5V from USB
AC Power Supply	PSA029 (Worldwide)
12V Supply (optional)	PSA031 – 12 VDC to 5 VDC
Continuous Runtime	18 hours Typical using Alkaline Batteries
Continuous Runtime	30 hours Typical using 1.5 V Lithium Batteries
Continuous Runtime	> 2 Weeks Typical using optional BAT015

Physical Characteristics	
Length (overall)	11.4 in (29.0 cm)
Length (instrument body only)	8.8 in (22.4 cm)
Width	2.8 in (7.1 cm)
Depth	1.6 in (4.1 cm)
Weight (with batteries)	1.0 lb (471 g)
Weight (with batteries, microphone and preamplifier)	1.1 lb (513 g)
Maximum Preamplifier Cable Length	200 ft (61 m)
Ingress Protection Rating	IP54

Environmental	
Temperature Sensitivity	≤ ± 0.5 dB +14 to +122 °F (-10 to +50 °C)
Storage Temperature	-22 to +140 °F (-30 to +60 °C)
Humidity Sensitivity	≤ ± 0.5 dB, 30% to 95% RH at +104 °F (+40 °C)

SoundExpert™ LxT Standards
ANSI S1.4-2014 Specification for Type 1 Sound Level Meters
ANSI S1.11-2004 Specification For Octave-Band And Fractional-Octave-Band Analog And Digital Filters, Class 1
IEC 61672-1:2013 Sound Level Meters, Class 1
IEC 61260:2001 Octave-Band And Fractional-Octave-Band Filters, Class 1
IEC 60651:2001 Sound Level Meters
IEC 60804:2000 Integrating-Averaging Sound Level Meters
IEC 61010-1:2001 Ed 2.0 Safety Requirements For Electrical Equipment For Measurement, Control, And Laboratory Use – Part 1: General Requirements
IEC 61326-1:2005 Electrical Equipment for Measurement, Control and Laboratory Use – EMC Requirements
CE Directive 2004/108/EC

Ordering Information

Model	Description
LXT1-SE-FF	SoundExpert LxT with 377B02 free-field microphone, SLM Utility G4 software
LXT1-SE-RI	SoundExpert LxT with 377B20 diffuse field microphone, SLM Utility G4 software
NMS-SE-FF	SoundExpert Environmental Noise Monitoring System – includes LXT1-SE-FF, EPS042, EPS2116, EXC010, SLM Utility G4 software
NMS-SE-RI	SoundExpert Environmental Noise Monitoring System – includes LXT1-SE-RI, EPS042, EPS2116, EXC010, SLM Utility G4 software
Included Accessories	
PRMLxT1L	Microphone Preamplifier
PSA029	Universal AC power supply
CBL138	USB Cable 6 ft (2 m)
Batteries	4-AA Alkaline
WS001	Windscreen 3.5" (90 mm)
Optional Accessories	
CAL200	Class 1 acoustic calibrator with 1/2 inch opening
SWW-DNA	Advanced Analysis Software
SWW-DNA-LXT	DNA driver for SoundExpert LxT
EPS042	Environmental Enclosure for LxT, includes BAT015 and gland for microphone cable
EPS2116	Outdoor protection for preamplifier and microphone
LXT-CCS	Hard Shell carrying case
PSA031	12 VDC to 5 VDC power converter
EXCxxx	Microphone extension cable in various lengths
CBL139	Cable connection AC/DC out to RCA or BNC
TRP001	Camera type Tripod for mounting EPS2116
Calibration	
CER-LXT1	Calibration for SoundExpert LxT
CER-MIC	Calibration for Microphone

LxT Family of Products

SoundExpert LxT

- Product Noise Evaluation
- Product Line Acoustic Testing
- Site Assessment
- Attended Noise Monitoring
- Environmental Noise Monitoring

SoundTrack LxT N/Forcer

- Community Noise Standards and Code Enforcement
- Nuisance Noise Complaint
- Traffic Noise and 'Boom Cars'
- Evidential Data

SoundTrack LxT1-QPR

- Firearms Acoustic Analysis
- Shooting Ranges Noise Assessment
- Impulsive Noise Measuring

SoundTrack LxT

- Workplace Noise Exposure Assessment
- Plant Noise Surveys
- Hearing Protection Analysis

Total Customer Satisfaction
LARSON DAVIS
A PCB PIEZOTRONICS DIV.

For environmental noise monitoring and building acoustics, **Larson Davis** offers a full line of instruments, accessories and software. For personal noise and vibration exposure monitoring, Larson Davis complements this with sound level meters, personal noise dosimeters, human vibration meters, audiometric calibration systems and hearing conservation programs. As a division of PCB Piezotronics, Inc., Larson Davis guarantees **Total Customer Satisfaction** through our outstanding limited warranty; no-charge, 24 hours toll-free technical support; global distribution; and worldwide customer service.

Visit **www.larsondavis.com** *to locate your nearest sales office*

LARSON DAVIS
A PCB PIEZOTRONICS DIV.

24350 Indoplex Circle, Farmington Hills, MI 48335 USA
Phone 716-926-8243
Toll-Free in USA 888-258-3222
Fax 716-926-8215 **Email** sales@larsondavis.com
Website www.larsondavis.com

ISO 9001 CERTIFIED

© 2014 PCB Group, Inc. In the interest of constant product improvement, specifications are subject to change without notice. PCB® and ICP® are registered trademarks of PCB Group Inc. SoundTrack LXT®, SoundExpert®, Spark®, and Blaze® are registered trademarks of PCB Piezotronics, Inc. HVManager™ are trademarks of PCB Piezotronics, Inc. All other trademarks are properties of their respective owners.

LD-SoundExpertLxT-0714

Printed in U.S.A.

APPENDIX C. WEATHER DATA

Government of Canada | Gouvernement du Canada

Hourly Data Report for June 21, 2019

All times are specified in Local Standard Time (LST). Add 1 hour to adjust for Daylight Saving Time where and when it is observed.

FORT FRANCES RCS
ONTARIO
Current Station Operator: ECCC - MSC

Latitude:	48°39'04.000" N	**Longitude:**	93°26'20.002" W	**Elevation:**	342.00 m
Climate ID:	6022474	**WMO ID:**	71962	**TC ID:**	TAG

TIME	Temp °C	Dew Point °C	Rel Hum %	Wind Dir 10's deg	Wind Spd km/h	Visibility km	Stn Press kPa	Hmdx	Wind Chill	Weather
00:00	8.2	6.6	90	33	2		97.22			NA
01:00	7.4	6.4	94		0		97.26			NA
02:00	6.8	6.0	95		0		97.30			NA
03:00	5.6	4.7	94	0	1		97.37			NA
04:00	5.8	4.9	94	8	4		97.30			NA
05:00	5.8	4.6	92	28	3		97.51			NA
06:00	13.7	11.5	86	9	4		97.46			NA
07:00	16.8	9.0	60	11	10		97.48			NA
08:00	18.8	9.6	55	9	11		97.50			NA
09:00	20.7	8.0	44	9	15		97.48			NA
10:00	21.8	9.4	45	11	14		97.49			NA
11:00	22.9	8.9	41	10	18		97.49			NA
12:00	23.8	7.7	36	10	26		97.45			NA
13:00	24.2	6.6	32	12	23		97.43			NA
14:00	23.9	7.9	36	12	19		97.45			NA
15:00	24.5	5.1	29	14	19		97.44			NA
16:00	24.0	5.3	30	15	17		97.43			NA
17:00	23.4	5.2	31	14	19		97.42			NA
18:00	23.1	6.2	34	14	18		97.46			NA
19:00	21.9	6.1	36	15	12		97.52			NA
20:00	19.8	6.5	42	14	10		97.58			NA
21:00	15.3	6.8	57	12	8		97.60			NA
22:00	17.5	6.5	49	14	12		97.63			NA
23:00	17.2	6.5	49	15	13		97.67			NA

Legend

- E = Estimated
- M = Missing
- NA = Not Available*
- [empty] = Indicates an unobserved value

Date modified:
2019-12-04

▶ Notices

Hourly Data Report for December 22, 2020

If selected Local Standard Time (LST), add 1 hour to adjust for Daylight Saving Time where and when it is observed.

FORT FRANCES RCS
ONTARIO
Current Station Operator: ECCC - MSC

Latitude:	48°39'04.000" N	**Longitude:**	93°26'20.002" W	**Elevation:**	342.00 m
Climate ID:	6022474	**WMO ID:**	71962	**TC ID:**	TAG

TIME LST	Temp °C	Dew Point °C	Rel Hum %	Precip. Amount mm	Wind Dir 10's deg	Wind Spd km/h	Visibility km	Stn Press kPa	Hmdx	Wind Chill	Weather
00:00	-9.0	-11.0	85	0.0	28	17		97.33		-16	NA
01:00	-9.2	-10.9	88	0.0	26	10		97.34		-14	NA
02:00	-9.2	-10.8	88	0.0	25	9		97.35		-14	NA
03:00	-9.3	-10.4	91	0.0	22	4		97.38		-12	NA
04:00	-9.1	-9.8	95	0.0	20	4		97.37		-11	NA
05:00	-8.8	-9.6	94	0.0	15	4		97.36		-11	NA
06:00	-8.4	-9.3	93	0.0	16	6		97.34		-12	NA
07:00	-8.0	-8.9	93	0.0	16	5		97.33		-11	NA
08:00	-7.3	-8.1	94	0.0	16	8		97.25		-11	NA
09:00	-7.0	-7.9	94	0.0	13	9		97.17		-11	NA
10:00	-6.6	-7.5	94	0.1	13	11		97.15		-12	NA
11:00	-6.1	-6.9	94	0.0	13	10		97.12		-11	NA
12:00	-5.5	-6.3	94	0.0	12	12		97.01		-10	NA
13:00	-5.1	-5.8	95	0.0	10	14		96.88		-10	NA
14:00	-4.9	-5.7	94	0.1	10	21		96.66		-12	NA
15:00	-5.1	-5.9	94	0.0	9	23		96.51		-12	NA
16:00	-5.0	-6.0	92	0.5	8	23		96.37		-12	NA
17:00	-4.7	-5.9	91	0.1	9	22		96.34		-12	NA
18:00	-4.4	-5.6	91	0.1	10	23		96.25		-11	NA
19:00	-4.0	-5.2	91	0.0	8	20		96.19		-10	NA
20:00	-3.4	-4.7	91	0.0	10	22		96.05		-10	NA
21:00	-2.6	-4.0	90	0.0	10	22		95.95		-9	NA
22:00	-2.0	-3.5	90	0.0	10	17		95.87		-7	NA
23:00	-1.9	-3.1	91	0.0	8	13		95.80		-6	NA

Legend

- E = Estimated
- M = Missing
- NA = Not Available*
- [empty] = Indicates an unobserved value

Date modified:

2020-12-10

APPENDIX D. NOISE SOURCES & CALCULATIONS

New Gold Inc. - Rainy River Mine
Acoustic Assessment Report (April 2021 Update)

Appendix D - Noise Sources & Calculations
Table D1: Equipment Summary

New sources added or modified as part of this updated AAR are higlighted in green.

AAR Source ID	Source Description	Source Location	Significant Source of Noise? (Yes or No)	Sound Characteristics	Source Type	Data Source	Comments
AC1	WMP Air Compressor 1	Water Management Pond	Yes	Steady	Point	Manufacturer Data [Note 1a]	
AC2	WMP Air Compressor 2	Water Management Pond	Yes	Steady	Point	Manufacturer Data [Note 1a]	
AC3	WMP Air Compressor 3	Water Management Pond	Yes	Steady	Point	Manufacturer Data [Note 1a]	
AC4	WMP Air Compressor 4	Water Management Pond	Yes	Steady	Point	Manufacturer Data [Note 1a]	
BD1	Blast Hole Drill 1 - Sandvik DP1500i	Open Pit	Yes	Steady	Point	Measured [Note 1b]	
BD2	Blast Hole Drill 2- Sandvik D75KS	Open Pit	Yes	Steady	Point	Assumed to be similar to Sandvik DP1500i	
BD3	Blast Hole Drill 3- Sandvik D75KS	Open Pit	Yes	Steady	Point	Assumed to be similar to Sandvik DP1500i	
BD4	Blast Hole Drill 4- Sandvik D75KS	Open Pit	Yes	Steady	Point	Assumed to be similar to Sandvik DP1500i	
BD5	Blast Hole Drill 5- Sandvik D75KS	Open Pit	Yes	Steady	Point	Assumed to be similar to Sandvik DP1500i	
C	Crusher	Mill Building / Processing Area	Yes	Steady	Point	Measured [Note 1b]	
DC1	Dust Collector 1	Mill Building / Processing Area	Yes	Steady	Point	Measured [Note 1b]	
DC2	Dust Collector 2	Mill Building / Processing Area	Yes	Steady	Point	Measured [Note 1b]	
E1	Komatsu Diesel Excavator PC5500	Open Pit	Yes	Steady	Point	Measured [Note 1b]	
E2	Komatsu Diesel Excavator PC5500	Open Pit	Yes	Steady	Point	Measured [Note 1b]	
E3	Komatsu Diesel Excavator PC8000	Open Pit	Yes	Steady	Point	Measured [Note 1b]	
E4	Komatsu Diesel Excavator PC3000	Open Pit	Yes	Steady, Tonal	Point	Measured [Note 1b]	
E5	Komatsu Diesel Excavator PC800LC	Open Pit	Yes	Steady	Point	Measured [Note 1b]	
E6	Komatsu Diesel Excavator PC360LC	Open Pit	Yes	Steady	Point	Measured [Note 1b]	
E7	Komatsu Diesel Excavator PC360LC	TMA Area (New Gold)	Yes	Steady	Point	Measured [Note 1b]	Komatsu Excavator PC360LC or similar; TMA construction
E8	Komatsu Diesel Excavator PC360LC	TMA Area (New Gold)	Yes	Steady	Point	Measured [Note 1b]	Komatsu Excavator PC360LC or similar; TMA construction
E9	Komatsu Diesel Excavator PC360LC	TMA Area (New Gold)	Yes	Steady	Point	Measured [Note 1b]	Komatsu Excavator PC360LC or similar; TMA construction
E10	Komatsu Diesel Excavator PC360LC	TMA Area (New Gold)	Yes	Steady	Point	Measured [Note 1b]	Komatsu Excavator PC360LC or similar; Reclaim/tailings pipeline
E11	Komatsu Diesel Excavator PC360LC	TMA Area (New Gold)	Yes	Steady	Point	Measured [Note 1b]	Komatsu Excavator PC360LC or similar; Reclaim/tailings pipeline
E12	Komatsu Diesel Excavator PC360LC	TMA Area (Contractor)	Yes	Steady	Point	Measured [Note 1b]	Komatsu Excavator PC360LC or similar; TMA construction
E13	Komatsu Diesel Excavator PC360LC	TMA Area (Contractor)	Yes	Steady	Point	Measured [Note 1b]	Komatsu Excavator PC360LC or similar; TMA construction
E14	Komatsu Diesel Excavator PC360LC	TMA Area (Contractor)	Yes	Steady	Point	Measured [Note 1b]	Komatsu Excavator PC360LC or similar; TMA construction
E15	Komatsu Diesel Excavator PC360LC	TMA Area (Contractor)	Yes	Steady	Point	Measured [Note 1b]	Komatsu Excavator PC360LC or similar; TMA construction
E16	Komatsu Diesel Excavator PC360LC	TMA Area (Contractor)	Yes	Steady	Point	Measured [Note 1b]	Komatsu Excavator PC360LC or similar; TMA construction
E17	Komatsu Diesel Excavator PC360LC	Portal	Yes	Steady	Point	Measured [Note 1b]	Komatsu Excavator PC360LC or similar; Wick drains
E18	Komatsu Diesel Excavator PC360LC	Portal	Yes	Steady	Point	Measured [Note 1b]	Komatsu Excavator PC360LC or similar; Wick drains
EO_PC	EO Portable Plant - Elrus 3054 Jaw Crusher	East Outcrop Area	Yes	Steady	Point	Measured [Note 1c]	
EO_SCNR	EO Portable Plant - Terex 380 MVP Cone and Screener	East Outcrop Area	Yes	Steady	Point	Measured [Note 1c]	
EO_GENSET	EO Portable Plant - Genset	East Outcrop Area	Yes	Steady	Point	Measured [Note 1c]	
EO_FEL	EO Portable Plant - Wheel Loader (Doolan DL420)	East Outcrop Area	Yes	Steady	Point	Measured [Note 1c]	
MBPA_PC	Portable Plant - Powerscreen Premiertrak 600 Jaw Crusher	Mill Building / Processing Area	Yes	Steady	Point	Measured [Note 1b]	
MBPA_GENSET	Portable Plant - CAT C13 Genset	Mill Building / Processing Area	Yes	Steady	Point	Manufacturer Data	
MB_W-E	Mill Building - Wall - East	Mill Building / Processing Area	Yes	Steady	V. Area	Measured [Note 1c]	
MB_W-N	Mill Building - Wall - North	Mill Building / Processing Area	Yes	Steady	V. Area	Measured [Note 1c]	
MB_BD-E	Mill Building - Bay Door - West	Mill Building / Processing Area	Yes	Steady	V. Area	Measured [Note 1c]	
RD1	RC Drill Sandvik DR580	Open Pit	Yes	Steady	Point	Measured [Note 1b]	
RD2	RC Drill Sandvik DR580	Open Pit	Yes	Steady	Point	Measured [Note 1b]	
RD3	RC Drill Sandvik DR560	Open Pit	Yes	Steady	Point	Assumed to be similar to Sandvik DR580	
T1	Transformer 1	Substation	Yes	Steady, Tonal	Point	Measured [Note 1b]	
T2	Transformer 2	Substation	Yes	Steady, Tonal	Point	Measured [Note 1b]	
TD01	Track Dozer 01 (Pit - Komatsu D475)	Open Pit	Yes	Steady, Tonal	Point	Measured [Note 1b]	
TD02	Track Dozer 02 (Pit -CAT D10)	Open Pit	Yes	Steady, Tonal	Point	Measured [Note 1b]	
TD03	Track Dozer 03 (Pit -CAT D10)	Open Pit	Yes	Steady, Tonal	Point	Measured [Note 1b]	
TD04	Track Dozer 04 (Pit -CAT D10)	Open Pit	Yes	Steady, Tonal	Point	Measured [Note 1b]	
TD05	Track Dozer 05 (PAG - Komatsu D375)	PAG Area	Yes	Steady	Point	Measured [Note 1b]	
TD06	Track Dozer 06 (PAG - Komatsu D375)	PAG Area	Yes	Steady	Point	Measured [Note 1b]	
TD07D	Track Dozer 07 (PAG - Komatsu D475)	PAG Area	Yes	Steady, Tonal	Point	Measured [Note 1b]	Track dozer Komatsu D475 only operates during daytime at stockpiles;
TD07N	Track Dozer 07 (PAG - CAT D10)	PAG Area	Yes	Steady	Point	Measured [Note 1b]	other track dozers can operate during evening and nighttime periods
TD08D	Track Dozer 08 (PAG - Komatsu D475)	PAG Area	Yes	Steady, Tonal	Point	Measured [Note 1b]	Track dozer Komatsu D475 only operates during daytime at stockpiles;
TD08N	Track Dozer 08 (PAG - CAT D10)	PAG Area	Yes	Steady	Point	Measured [Note 1b]	other track dozers can operate during evening and nighttime periods
TD09	Track Dozer 09 (Ore -CAT D9)	LGOS Area	Yes	Steady	Point	Measured [Note 1b]	
TD10	Track Dozer 10 (Ore -CAT D8)	LGOS Area	Yes	Steady	Point	Measured [Note 1b]	
TD11D	Track Dozer 11 (NPAG/OB - Komatsu D475)	NPAG/OB Area	Yes	Steady, Tonal	Point	Measured [Note 1b]	Track dozer Komatsu D475 only operates during daytime at stockpiles;
TD11N	Track Dozer 11 (NPAG/OB - CAT D10)	NPAG/OB Area	Yes	Steady	Point	Measured [Note 1b]	other track dozers can operate during evening and nighttime periods
TD12D	Track Dozer 12 (NPAG/OB - Komatsu D475)	NPAG/OB Area	Yes	Steady, Tonal	Point	Measured [Note 1b]	Track dozer Komatsu D475 only operates during daytime at stockpiles;
TD12N	Track Dozer 11 (NPAG/OB - CAT D10)	NPAG/OB Area	Yes	Steady	Point	Measured [Note 1b]	other track dozers can operate during evening and nighttime periods
TD13	Track Dozer 13 (NPAG/OB -CAT D9)	NPAG/OB Area	Yes	Steady	Point	Measured [Note 1b]	

Appendix D - Noise Sources & Calculations
Table D1: Equipment Summary

New sources added or modified as part of this updated AAR are higlighted in green.

AAR Source ID	Source Description	Source Location	Significant Source of Noise? (Yes or No)	Sound Characteristics	Source Type	Data Source	Comments
TD14	Track Dozer 14 (NPAG/OB -CAT D9)	NPAG/OB Area	Yes	Steady	Point	Measured [Note 1b]	
TD15	Track Dozer 15 (NPAG/OB -CAT D9)	NPAG/OB Area	Yes	Steady	Point	Measured [Note 1b]	
TD16	Track Dozer 16 (NPAG/OB -CAT D9)	NPAG/OB Area	Yes	Steady	Point	Measured [Note 1b]	
TD17	Track Dozer 17 (TMA -CAT D9)	TMA Area (New Gold)	Yes	Steady	Point	Measured [Note 1b]	CAT D9 or similar; TMA Construction
TD18	Track Dozer 18 (TMA -CAT D9)	TMA Area (New Gold)	Yes	Steady	Point	Measured [Note 1b]	CAT D9 or similar; TMA Construction
TD19	Track Dozer 19 (TMA -CAT D9)	TMA Area (New Gold)	Yes	Steady	Point	Measured [Note 1b]	CAT D9 or similar; TMA Construction
TD20	Track Dozer 20 (TMA -CAT D9)	TMA Area (New Gold)	Yes	Steady	Point	Measured [Note 1b]	CAT D9 or similar; TMA Construction
TD21	Track Dozer 21 (TMA -CAT D9)	TMA Area (New Gold)	Yes	Steady	Point	Measured [Note 1b]	CAT D9 or similar; Reclaim/tailings pipeline
TD22	Track Dozer 22 (TMA -CAT D9)	TMA Area (New Gold)	Yes	Steady	Point	Measured [Note 1b]	CAT D9 or similar; Reclaim/tailings pipeline
TD23	Track Dozer 23 (TMA -CAT D9)	TMA Area (Contractor)	Yes	Steady	Point	Measured [Note 1b]	CAT D9 or similar; TMA Construction
TD24	Track Dozer 24 (TMA -CAT D9)	TMA Area (Contractor)	Yes	Steady	Point	Measured [Note 1b]	CAT D9 or similar; TMA Construction
TD25	Track Dozer 25 (TMA -CAT D9)	TMA Area (Contractor)	Yes	Steady	Point	Measured [Note 1b]	CAT D9 or similar; TMA Construction
TD26	Track Dozer 26 (TMA -CAT D9)	TMA Area (Contractor)	Yes	Steady	Point	Measured [Note 1b]	CAT D9 or similar; TMA Construction
TD27	Track Dozer 27 (TMA -CAT D9)	TMA Area (Contractor)	Yes	Steady	Point	Measured [Note 1b]	CAT D9 or similar; TMA Construction
WD	Komatsu Wheel Dozer WD900	Open Pit	Yes	Steady	Point	Estimated [Note 1e]	
WL1	Komatsu Wheel Loader WA1200	Open Pit	Yes	Steady	Point	Measured [Note 1b]	
WL2	CAT 994HL	Open Pit	Yes	Steady	Point	Assumed to be similar to Komatsu WA1200	
WL3	CAT 980H Wheel Loader	TMA Area (New Gold)	Yes	Steady	Point	Measured [Note 1b]	CAT D9 or similar; TMA Construction
WL4	CAT 980H Wheel Loader	TMA Area (New Gold)	Yes	Steady	Point	Measured [Note 1b]	CAT D9 or similar; TMA Construction
WL5	CAT 980H Wheel Loader	TMA Area (New Gold)	Yes	Steady	Point	Measured [Note 1b]	CAT D9 or similar; Reclaim/tailings pipeline
WL6	CAT 980H Wheel Loader	TMA Area (Contractor)	Yes	Steady	Point	Measured [Note 1b]	CAT D9 or similar; TMA Construction
WP01	Water Pump WP01	Open Pit	Yes	Steady	Point	Measured [Note 1b]	
WP02	Water Pump WP02	Open Pit	Yes	Steady	Point	Measured [Note 1b]	
WP03	Water Pump WP03	Open Pit	Yes	Steady	Point	Measured [Note 1b]	
WP04	Water Pump WP04	Open Pit	Yes	Steady	Point	Measured [Note 1b]	
WP05	Water Pump WP05	Open Pit	Yes	Steady	Point	Measured [Note 1b]	
WP06	Water Pump WP06	Open Pit	Yes	Steady	Point	Measured [Note 1b]	
WP07	Water Pump WP07	Open Pit	Yes	Steady	Point	Measured [Note 1b]	
WP08	Water Pump WP08	Open Pit	Yes	Steady	Point	Measured [Note 1b]	
WP09	Water Pump WP09	Sediment Pond	Yes	Steady	Point	Measured [Note 1b]	
WP10	Water Pump WP10	Sediment Pond	Yes	Steady	Point	Measured [Note 1b]	
WP11	Water Pump WP11	Utility Laydown Area	Yes	Steady	Point	Measured [Note 1b]	
WP12	Water Pump WP12	Sediment Pond	Yes	Steady	Point	Measured [Note 1b]	
WP13	Water Pump WP13	Sediment Pond	Yes	Steady	Point	Measured [Note 1b]	
WP14	Water Pump WP14	LD4 Area	Yes	Steady	Point	Measured [Note 1b]	
WP15	Water Pump WP15	LD4 Area	Yes	Steady	Point	Measured [Note 1b]	
WP16	Water Pump WP16	Open Pit	Yes	Steady	Point	Measured [Note 1b]	
WP17	Water Pump WP17	Sediment Pond	Yes	Steady	Point	Measured [Note 1b]	
WP18	Water Pump WP18	Sediment Pond	Yes	Steady	Point	Measured [Note 1b]	
WP19	Water Pump WP19	South Runoff Pond	Yes	Steady	Point	Measured [Note 1b]	
WS	Wet Scrubber	Mill Building / Processing Area	Yes	Steady	Point	Manufacturer Data [Note 1a]	
MGR_OPMill	Motor Grader Route Open Pit to Mill	Haul Roads	Yes	Steady	Mvg Point	Measured [Note 1b]	
MGR_SP	Motor Grader Route Stockpile	Haul Roads	Yes	Steady	Mvg Point	Measured [Note 1b]	
MGR_PAG	Motor Grader Route PAG	Haul Roads	Yes	Steady	Mvg Point	Measured [Note 1b]	
MGR_NPAG	Motor Grader Route NPAG	Haul Roads	Yes	Steady	Mvg Point	Measured [Note 1b]	
MGR_OB	Motor Grader Route OB	Haul Roads	Yes	Steady	Mvg Point	Measured [Note 1b]	
MGR_Split-WMRS	Motor Grader Route Split to WMRS	Haul Roads	Yes	Steady	Mvg Point	Measured [Note 1b]	
MGR_OB-NPAG	Motor Grader Route OB to NPAG	Haul Roads	Yes	Steady	Mvg Point	Measured [Note 1b]	
MGR_WMRS-TMA	Motor Grader Route WMRS to TMA	Haul Roads	Yes	Steady	Mvg Point	Measured [Note 1b]	
MGR_TMA	Motor Grader Route TMA	Haul Roads	Yes	Steady	Mvg Point	Measured [Note 1b]	
TRE_OP-Mill	Truck Route Open Pit to Mill (Empty Truck)	Haul Roads	Yes	Steady	Mvg Point	Measured [Note 1b]	
TRE_OP-LGO	Truck Route Open Pit to LGO (Empty Truck)	Haul Roads	Yes	Steady	Mvg Point	Measured [Note 1b]	
TRE_OP-PAG	Truck Route Open Pit to PAG (Empty Truck)	Haul Roads	Yes	Steady	Mvg Point	Measured [Note 1b]	
TRE_OP-NPAG	Truck Route Open Pit to NPAG (Empty Truck)	Haul Roads	Yes	Steady	Mvg Point	Measured [Note 1b]	
TRE_OP-OB	Truck Route Open Pit to Overburden (Empty Truck)	Haul Roads	Yes	Steady	Mvg Point	Measured [Note 1b]	
TRE_OP-TMA	Truck Route Open Pit to TMA Staging Area (Empty Truck)	Haul Roads	Yes	Steady	Mvg Point	Measured [Note 1b]	
TRE_TMA1	Truck Route TMA Staging Area to TMA Dam (Empty Truck)	Haul Roads	Yes	Steady	Mvg Point	Measured [Note 1b]	
TRE_TMA2	Truck Route TMA Staging Area to TMA Dam (Empty Truck)	Haul Roads	Yes	Steady	Mvg Point	Measured [Note 1b]	
TRL_OP-Mill	Truck Route Open Pit to Mill (Loaded Truck)	Haul Roads	Yes	Steady	Mvg Point	Measured [Note 1b]	
TRL_OP-LGO	Truck Route Open Pit to LGO (Loaded Truck)	Haul Roads	Yes	Steady	Mvg Point	Measured [Note 1b]	
TRL_OP-PAG	Truck Route Open Pit to PAG (Loaded Truck)	Haul Roads	Yes	Steady	Mvg Point	Measured [Note 1b]	

New Gold Inc. - Rainy River Mine
Acoustic Assessment Report (April 2021 Update)

Appendix D - Noise Sources & Calculations
Table D1: Equipment Summary

New sources added or modified as part of this updated AAR are higlighted in green.

AAR Source ID	Source Description	Source Location	Significant Source of Noise? (Yes or No)	Sound Characteristics	Source Type	Data Source	Comments
TRL_OP-NPAG	Truck Route Open Pit to NPAG (Loaded Truck)	Haul Roads	Yes	Steady	Mvg Point	Measured [Note 1b]	
TRL_OP-OB	Truck Route Open Pit to Overburden (Loaded Truck)	Haul Roads	Yes	Steady	Mvg Point	Measured [Note 1b]	
TRL_OP-TMA	Truck Route Open Pit to TMA Staging Area (Loaded Truck)	Haul Roads	Yes	Steady	Mvg Point	Measured [Note 1b]	
TRL_TMA1	Truck Route TMA Staging Area to TMA Dam	Haul Roads	Yes	Steady	Mvg Point	Measured [Note 1b]	
TRL_TMA2	Truck Route TMA Staging Area to TMA Dam	Haul Roads	Yes	Steady	Mvg Point	Measured [Note 1b]	
WTR_OPMill	Water Truck Route Open Pit to Mill	Haul Roads	Yes	Steady	Mvg Point	Measured [Note 1b]	
WTR_SP	Water Truck Route Stockpile	Haul Roads	Yes	Steady	Mvg Point	Measured [Note 1b]	
WTR_PAG	Water Truck Route PAG	Haul Roads	Yes	Steady	Mvg Point	Measured [Note 1b]	
WTR_NPAG	Water Truck Route NPAG	Haul Roads	Yes	Steady	Mvg Point	Measured [Note 1b]	
WTR_OB	Water Truck Route OB	Haul Roads	Yes	Steady	Mvg Point	Measured [Note 1b]	
EG1	Emergency Generator 1 (CAT 2.5 MW)	Substation	Yes	Steady	Point	Manufacturer Data [Note 1a]	
EG2	Emergency Generator 2 (CAT 2.5 MW)	Substation	Yes	Steady	Point	Manufacturer Data [Note 1a]	
FP1	Fire Pump 1	Mill Building / Processing Area	Yes	Steady	Point	Manufacturer Data [Note 1d]	
FP2	Fire Pump 2	Mill Building / Processing Area	Yes	Steady	Point	Manufacturer Data [Note 1d]	
DC3	Furnace Dust Collector	Mill Building / Processing Area	No				
DC4	Lime Bin Dust Collector	Mill Building / Processing Area	No				
DC5	Flocculant Handling Cartridge Filter	Mill Building / Processing Area	No				
DC6	Copper Sulphate Loading & Mixing	Mill Building / Processing Area	No				
DC7	Sodium Metabisulphate Loading	Mill Building / Processing Area	No				
EF2	Cyanide Tank Exhaust	Mill Building / Processing Area	No				
EF3	Dilute Acid Tank	Mill Building / Processing Area	No				
VENT3	Hydrochloric Acid Tank	Mill Building / Processing Area	No				
LEACH	Leach Tanks	Mill Building / Processing Area	No				
HCND1	CN Destruction Tank	Mill Building / Processing Area	No				
HCND2	CN Destruction Tank	Mill Building / Processing Area	No				
Various	Space Heating in Buildings	Mill Building / Processing Area	No				

Notes
1a: Sound level estimated using manufacturer data as identified in previous AARs
1b: Measured sound levels of an equipment having same model. As measured in previous AARs
1c: Measured by Trinity and/or New Gold
1d: Sound level estimated using manufacturer data as identified in previous AARs. Spectrum corrections of similar equipment applied to overall PWL from manufacturer to obtain sound level in octave bands.
1e: Sound level estimated using data referenced in other reports.

New Gold Inc. - Rainy River Mine
Acoustic Assessment Report (April 2021 Update)

Appendix D - Noise Sources & Calculations
Table D1: Equipment Summary

New sources added or modified as part of this updated AAR are higlighted in green.

AAR Source ID	Description		SPL (dB) By Octave Band Centre Frequency (Hz)									SPL Overall	Tonal Penalty	SPL Radiation			PWL (dB) By Octave Band Centre Frequency (Hz)									PWL Overall		Maximum Operating Times			NPC-104 Intermittence Correction Factor		
			31.5	63	125	250	500	1000	2000	4000	8000			Directivity	Distance to Source		31.5	63	125	250	500	1000	2000	4000	8000			Day	Evening	Night	Day	Evening	Night
			(dB)	(dB)	(dB)	(dB)	(dB)	(dB)	(dB)	(dB)	(dB)	(dBA)			(m)	(ft)	(dB)	(dB)	(dB)	(dB)	(dB)	(dB)	(dB)	(dB)	(dB)	(dBA)	(dBA)	(min/h)	(min/h)	(min/h)	(dB)	(dB)	(dB)
AC1	WMP Air Compressor 1		--	--	--	--	--	--	--	--	--	--	0	--	--	--		--	--	--	--	--	--	--	--	--	99.0	60	60	60	0	0	0
AC2	WMP Air Compressor 2		--	--	--	--	--	--	--	--	--	--	0	--	--	--		--	--	--	--	--	--	--	--	--	99.0	60	60	60	0	0	0
AC3	WMP Air Compressor 3		--	--	--	--	--	--	--	--	--	--	0	--	--	--		--	--	--	--	--	--	--	--	--	99.0	60	60	60	0	0	0
AC4	WMP Air Compressor 4		--	--	--	--	--	--	--	--	--	--	0	--	--	--		--	--	--	--	--	--	--	--	--	99.0	60	60	60	0	0	0
BD1	Blast Hole Drill 1 - Sandvik DP1500i	m18	77.7	83.4	82.1	79.4	83.4	83.5	84.1	80.5	83.0	89.9	0	2	9.0	29.5	104.6	110.3	109.0	106.3	110.3	110.4	111.0	107.4	109.9	118.8	116.8	60	60	60	0	0	0
BD2	Blast Hole Drill 2- Sandvik D75KS	m18	77.7	83.4	82.1	79.4	83.4	83.5	84.1	80.5	83.0	89.9	0	2	9.0	29.5	104.6	110.3	109.0	106.3	110.3	110.4	111.0	107.4	109.9	118.8	116.8	60	60	60	0	0	0
BD3	Blast Hole Drill 3- Sandvik D75KS	m18	77.7	83.4	82.1	79.4	83.4	83.5	84.1	80.5	83.0	89.9	0	2	9.0	29.5	104.6	110.3	109.0	106.3	110.3	110.4	111.0	107.4	109.9	118.8	116.8	60	60	60	0	0	0
BD4	Blast Hole Drill 4- Sandvik D75KS	m18	77.7	83.4	82.1	79.4	83.4	83.5	84.1	80.5	83.0	89.9	0	2	9.0	29.5	104.6	110.3	109.0	106.3	110.3	110.4	111.0	107.4	109.9	118.8	116.8	60	60	60	0	0	0
BD5	Blast Hole Drill 5- Sandvik D75KS	m18	77.7	83.4	82.1	79.4	83.4	83.5	84.1	80.5	83.0	89.9	0	2	9.0	29.5	104.6	110.3	109.0	106.3	110.3	110.4	111.0	107.4	109.9	118.8	116.8	60	60	60	0	0	0
C	Crusher	m20	77.1	84.3	77.2	75.0	76.0	74.9	72.3	68.2	61.3	79.4	0	2	15.0	49.2	108.4	115.6	108.5	106.3	107.3	106.2	103.6	99.5	92.6	118.3	110.7	60	60	60	0	0	0
DC1	Dust Collector 1	m25	81.8	80.8	82.7	87.3	81.5	77.9	74.8	71.5	68.9	84.3	0	2	4.3	14.1	102.3	101.3	103.2	107.8	102.0	98.4	95.3	92.0	89.4	111.4	104.7	60	60	60	0	0	0
DC2	Dust Collector 2	m25	81.8	80.8	82.7	87.3	81.5	77.9	74.8	71.5	68.9	84.3	0	2	4.3	14.1	102.3	101.3	103.2	107.8	102.0	98.4	95.3	92.0	89.4	111.4	104.7	60	60	60	0	0	0
E1	Komatsu Diesel Excavator PC5500	m11	83.2	87.9	91.7	86.6	83.4	79.2	75.8	68.8	61.6	85.4	0	2	13.0	42.7	113.3	118.0	121.8	116.7	113.5	109.3	105.9	98.9	91.7	125.0	115.5	60	60	60	0	0	0
E2	Komatsu Diesel Excavator PC5500	m11	83.2	87.9	91.7	86.6	83.4	79.2	75.8	68.8	61.6	85.4	0	2	13.0	42.7	113.3	118.0	121.8	116.7	113.5	109.3	105.9	98.9	91.7	125.0	115.5	60	60	60	0	0	0
E3	Komatsu Diesel Excavator PC8000	m28	86.2	95.0	90.0	90.6	88.8	83.3	79.9	71.8	63.6	89.6	0	2	15.0	49.2	117.5	126.3	121.3	121.9	120.1	114.6	111.2	103.1	94.9	129.7	120.9	60	60	60	0	0	0
E4	Komatsu Diesel Excavator PC3000	m13	84.8	87.7	95.9	90.4	86.8	84.5	78.8	73.3	67.2	89.5	5	2	13.0	42.7	114.9	117.8	126.0	120.5	116.9	114.6	108.9	103.4	97.3	128.4	119.6	60	60	60	0	0	0
E5	Komatsu Diesel Excavator PC800LC	m27	74.6	81.8	81.4	73.2	77.7	73.1	69.8	64.7	58.8	78.6	0	2	20.0	65.6	108.4	115.6	115.2	107.0	111.5	106.9	103.6	98.5	92.6	120.2	112.4	60	60	60	0	0	0
E6	Komatsu Diesel Excavator PC360LC	m1	85.1	87.4	89.0	89.0	85.4	84.0	80.1	71.0	65.2	88.4	0	2	10.0	32.8	112.9	115.2	116.8	116.8	113.2	111.8	107.9	98.8	93.0	122.8	116.2	60	60	60	0	0	0
E7	Komatsu Diesel Excavator PC360LC	m1	85.1	87.4	89.0	89.0	85.4	84.0	80.1	71.0	65.2	88.4	0	2	10.0	32.8	112.9	115.2	116.8	116.8	113.2	111.8	107.9	98.8	93.0	122.8	116.2	60	60	60	0	No. Op.	No. Op.
E8	Komatsu Diesel Excavator PC360LC	m1	85.1	87.4	89.0	89.0	85.4	84.0	80.1	71.0	65.2	88.4	0	2	10.0	32.8	112.9	115.2	116.8	116.8	113.2	111.8	107.9	98.8	93.0	122.8	116.2	60	60	60	0	0	0
E9	Komatsu Diesel Excavator PC360LC	m1	85.1	87.4	89.0	89.0	85.4	84.0	80.1	71.0	65.2	88.4	0	2	10.0	32.8	112.9	115.2	116.8	116.8	113.2	111.8	107.9	98.8	93.0	122.8	116.2	60	60	60	0	0	0
E10	Komatsu Diesel Excavator PC360LC	m1	85.1	87.4	89.0	89.0	85.4	84.0	80.1	71.0	65.2	88.4	0	2	10.0	32.8	112.9	115.2	116.8	116.8	113.2	111.8	107.9	98.8	93.0	122.8	116.2	60	60	60	0	0	0
E11	Komatsu Diesel Excavator PC360LC	m1	85.1	87.4	89.0	89.0	85.4	84.0	80.1	71.0	65.2	88.4	0	2	10.0	32.8	112.9	115.2	116.8	116.8	113.2	111.8	107.9	98.8	93.0	122.8	116.2	60	60	60	0	0	0
E12	Komatsu Diesel Excavator PC360LC	m1	85.1	87.4	89.0	89.0	85.4	84.0	80.1	71.0	65.2	88.4	0	2	10.0	32.8	112.9	115.2	116.8	116.8	113.2	111.8	107.9	98.8	93.0	122.8	116.2	60	60	60	0	0	0
E13	Komatsu Diesel Excavator PC360LC	m1	85.1	87.4	89.0	89.0	85.4	84.0	80.1	71.0	65.2	88.4	0	2	10.0	32.8	112.9	115.2	116.8	116.8	113.2	111.8	107.9	98.8	93.0	122.8	116.2	60	60	60	0	0	0
E14	Komatsu Diesel Excavator PC360LC	m1	85.1	87.4	89.0	89.0	85.4	84.0	80.1	71.0	65.2	88.4	0	2	10.0	32.8	112.9	115.2	116.8	116.8	113.2	111.8	107.9	98.8	93.0	122.8	116.2	60	60	60	0	0	0
E15	Komatsu Diesel Excavator PC360LC	m1	85.1	87.4	89.0	89.0	85.4	84.0	80.1	71.0	65.2	88.4	0	2	10.0	32.8	112.9	115.2	116.8	116.8	113.2	111.8	107.9	98.8	93.0	122.8	116.2	60	60	60	0	0	0
E16	Komatsu Diesel Excavator PC360LC	m1	85.1	87.4	89.0	89.0	85.4	84.0	80.1	71.0	65.2	88.4	0	2	10.0	32.8	112.9	115.2	116.8	116.8	113.2	111.8	107.9	98.8	93.0	122.8	116.2	60	60	60	0	0	0
E17	Komatsu Diesel Excavator PC360LC	m1	85.1	87.4	89.0	89.0	85.4	84.0	80.1	71.0	65.2	88.4	0	2	10.0	32.8	112.9	115.2	116.8	116.8	113.2	111.8	107.9	98.8	93.0	122.8	116.2	60	60	60	0	0	0
E18	Komatsu Diesel Excavator PC360LC	m1	85.1	87.4	89.0	89.0	85.4	84.0	80.1	71.0	65.2	88.4	0	2	10.0	32.8	112.9	115.2	116.8	116.8	113.2	111.8	107.9	98.8	93.0	122.8	116.2	60	60	60	0	0	0
EO_PC	EO Portable Plant - Elrus 3054 Jaw Crusher	m35	88.9	91.3	88.1	83.3	83.7	80.5	79.2	74.6	66.0	86.2	0	2	15.0	49.2	120.2	122.6	119.4	114.6	115.0	111.8	110.5	105.9	97.3	126.7	117.6	60	0	0	0	No. Op.	No. Op.
EO_SCNR	EO Portable Plant - Terex 380 MVP Cone and Screener	m36	81.6	87.4	86.1	82.3	86.5	86.1	85.3	80.3	70.2	90.9	0	2	15.0	49.2	112.9	118.7	117.4	113.6	117.8	117.4	116.6	111.6	101.5	125.4	122.2	60	0	0	0	No. Op.	No. Op.
EO_GENSET	EO Portable Plant - Genset	m37	78.7	86.4	91.5	88.6	90.6	87.8	85.1	78.7	71.1	92.6	0	2	15.0	49.2	110.0	117.7	122.8	119.9	121.9	119.1	116.4	110.0	102.4	128.1	123.9	60	0	0	0	No. Op.	No. Op.
EO_FEL	EO Portable Plant - Wheel Loader (Doolan DL420)	m38	76.8	90.7	82.7	77.8	83.6	84.8	80.0	74.7	65.4	87.8	0	2	15.0	49.2	108.1	122.0	114.0	109.1	114.9	116.1	111.3	106.0	96.7	124.6	119.1	60	0	0	0	No. Op.	No. Op.
MBPA_PC	Portable Plant - Powerscreen Premiertrak 600 Jaw Crusher	m22	91.1	97.0	93.7	94.9	93.3	90.3	87.4	82.7	76.0	95.5	0	2	6.0	19.7	114.5	120.4	117.1	118.3	116.7	113.7	110.8	106.1	99.4	125.3	118.9	60	60	60	0	0	0
MBPA_GENSET	Portable Plant - CAT C13 Genset			78.0	79.3	83.6	80.7	80.5	79.8	77.2	81.9	87.1	0	2	--	49.2		109.3	110.6	114.9	112.0	111.8	111.1	108.5	113.2	120.9	118.4	60	60	60	0	0	0
MB_W-E	Mill Building - Wall - East	m32	74.4	86.8	83.0	82.4	74.9	72.8	68.7	63.9	56.9	78.8	0	4	10.0	32.8	99.2	111.6	107.8	107.2	99.7	97.6	93.5	88.7	81.7	114.5	103.6	60	60	60	0	0	0
MB_W-N	Mill Building - Wall - North	m33	81.8	80.8	82.7	87.3	81.5	77.9	74.8	71.5	68.9	84.3	0	4	4.3	14.1	99.3	98.3	100.2	104.8	99.0	95.4	92.3	89.0	86.4	108.4	101.7	60	60	60	0	0	0
MB_BD-E	Mill Building - Bay Door - West	m31	89.7	99.4	92.4	81.2	82.0	81.0	76.3	70.7	65.2	85.5	0	4	11.0	36.1	115.3	125.0	118.0	106.8	107.6	106.6	101.9	96.3	90.8	126.4	111.2	60	60	60	0	0	0
RD1	RC Drill Sandvik DR580	m26	89.6	100.4	93.1	83.5	87.7	88.9	88.1	83.9	80.7	93.8	0	2	7.6	24.9	115.0	125.8	118.5	108.9	113.1	114.3	113.5	109.3	106.1	127.6	119.2	60	60	60	0	0	0
RD2	RC Drill Sandvik DR580	m26	89.6	100.4	93.1	83.5	87.7	88.9	88.1	83.9	80.7	93.8	0	2	7.6	24.9	115.0	125.8	118.5	108.9	113.1	114.3	113.5	109.3	106.1	127.6	119.2	60	60	60	0	0	0
RD3	RC Drill Sandvik DR560	m26	89.6	100.4	93.1	83.5	87.7	88.9	88.1	83.9	80.7	93.8	0	2	7.6	24.9	115.0	125.8	118.5	108.9	113.1	114.3	113.5	109.3	106.1	127.6	119.2	60	60	60	0	0	0
T1	Transformer 1	m30	--	--	--	--	--	--	--	--	--	--	5	--	--	--	--	111.0	113.0	108.0	108.0	102.0	97.0	92.0	85.0	116.8	108.4	60	60	60	0	0	0
T2	Transformer 2	m30	--	--	--	--	--	--	--	--	--	--	5	--	--	--	--	111.0	113.0	108.0	108.0	102.0	97.0	92.0	85.0	116.8	108.4	60	60	60	0	0	0
TD01	Track Dozer 01 (Pit - Komatsu D475)	m14	82.5	82.9	86.3	85.1	87.6	81.9	79.6	77.8	72.3	88.4	5	2	10.0	32.8	110.3	110.7	114.1	112.9	115.4	109.7	107.4	105.6	100.1	120.9	116.2	60	60	60	0	0	0
TD02	Track Dozer 02 (Pit -CAT D10)	m9	79.4	82.9	86.9	85.6	85.4	82.4	79.1	70.9	64.4	87.2	5	2	10.0	32.8	107.2	110.7	114.7	113.4	113.2	110.2	106.9	98.7	92.2	120.2	115.0	60	60	60	0	0	0
TD03	Track Dozer 03 (Pit -CAT D10)	m9	79.4	82.9	86.9	85.6	85.4	82.4	79.1	70.9	64.4	87.2	5	2	10.0	32.8	107.2	110.7	114.7	113.4	113.2	110.2	106.9	98.7	92.2	120.2	115.0	60	60	60	0	0	0
TD04	Track Dozer 04 (Pit -CAT D10)	m9	79.4	82.9	86.9	85.6	85.4	82.4	79.1	70.9	64.4	87.2	5	2	10.0	32.8	107.2	110.7	114.7	113.4	113.2	110.2	106.9	98.7	92.2	120.2	115.0	60	60	60	0	0	0
TD05	Track Dozer 05 (PAG - Komatsu D375)	m10	75.1	82.4	79.7	79.8	78.3	75.3	75.6	67.2	60.3	81.3	0	2	10.0	32.8	102.9	110.2	107.5	107.6	106.1	103.1	103.4	95.0	88.1	115.1	109.1	60	60	60	0	0	0
TD06	Track Dozer 06 (PAG - Komatsu D375)	m10	75.1	82.4	79.7	79.8	78.3	75.3	75.6	67.2	60.3	81.3	0	2	10.0	32.8	102.9	110.2	107.5	107.6	106.1	103.1	103.4	95.0	88.1	115.1	109.1	60	60	60	0	0	0
TD07D	Track Dozer 07 (PAG - Komatsu D475)	m14	82.5	82.9	86.3	85.1	87.6	81.9	79.6	77.8	72.3	88.4	5	2	10.0	32.8	110.3	110.7	114.1	112.9	115.4	109.7	107.4	105.6	100.1	120.9	116.2	60	0	0	0	No. Op.	No. Op.
TD07N	Track Dozer 07 (PAG - CAT D10)	m9	79.4	82.9	86.9	85.6	85.4	82.4	79.1	70.9	64.4	87.2	0	2	10.0	32.8	107.2	110.7	114.7	113.4	113.2	110.2	106.9	98.7	92.2	120.2	115.0	0	60	60	No. Op.	0	0
TD08D	Track Dozer 08 (PAG - Komatsu D475)	m14	82.5	82.9	86.3	85.1	87.6	81.9	79.6	77.8	72.3	88.4	5	2	10.0	32.8	110.3	110.7	114.1	112.9	115.4	109.7	107.4	105.6	100.1	120.9	116.2	60	0	0	0	No. Op.	No. Op.
TD08N	Track Dozer 08 (PAG - CAT D10)	m9	79.4	82.9	86.9	85.6	85.4	82.4	79.1	70.9	64.4	87.2	0	2	10.0	32.8	107.2	110.7	114.7	113.4	113.2	110.2	106.9	98.7	92.2	120.2	115.0	0	60	60	No. Op.	0	0
TD09	Track Dozer 09 (Ore -CAT D9)	m8	71.8	75.0	78.4	79.1	78.1	76.6	75.9	72.2	65.2	82.1	0	2	10.0	32.8	99.6	102.8	106.2	106.9	105.9	104.4	103.7	100.0	93.0	113.4	109.9	60	60	60	0	0	0
TD10	Track Dozer 10 (Ore -CAT D8)	m29	74.2	78.2	80.4	79.0	78.8	77.3	73.9	67.6	59.1	81.6	0	2	7.5	24.6	99.5	103.5	105.7	104.3	104.1	102.6	99.2	92.9	84.4	111.8	106.9	60	60	60	0	0	0
TD11D	Track Dozer 11 (NPAG/OB - Komatsu D475)	m14	82.5	82.9	86.3	85.1	87.6	81.9	79.6	77.8	72.3	88.4	5	2	10.0	32.8	110.3	110.7	114.1	112.9	115.4	109.7	107.4	105.6	100.1	120.9	116.2	60	0	0	0	No. Op.	No. Op.
TD11N	Track Dozer 11 (NPAG/OB - CAT D10)	m9	79.4	82.9	86.9	85.6	85.4	82.4	79.1	70.9	64.4	87.2	0	2	10.0	32.8	107.2	110.7	114.7	113.4	113.2	110.2	106.9	98.7	92.2	120.2	115.0	0	60	60	No. Op.	0	0
TD12D	Track Dozer 12 (NPAG/OB - Komatsu D475)	m14	82.5	82.9	86.3	85.1	87.6	81.9	79.6	77.8	72.3	88.4	5	2	10.0	32.8	110.3	110.7	114.1	112.9	115.4	109.7	107.4	105.6	100.1	120.9	116.2	60	0	0	0	No. Op.	No. Op.
TD12N	Track Dozer 11 (NPAG/OB - CAT D10)	m9	79.4	82.9	86.9	85.6	85.4	82.4	79.1	70.9	64.4	87.2	0	2	10.0	32.8	107.2	110.7	114.7	113.4	113.2	110.2	106.9	98.7	92.2	120.2	115.0	0	60	60	No. Op.	0	0
TD13	Track Dozer 13 (NPAG/OB -CAT D9)	m8	71.8	75.0	78.4	79.1	78.1	76.6	75.9	72.2	65.2	82.1	0	2	10.0	32.8	99.6	102.8	106.2	106.9	105.9	104.4	103.7	100.0	93.0	113.4	109.9	60	60	60	0	0	0
TD14	Track Dozer 14 (NPAG/OB -CAT D9)	m8	71.8	75.0	78.4	79.1	78.1	76.6	75.9	72.2	65.2	82.1	0	2	10.0	32.8	99.6	102.8	106.2	106.9	105.9	104.4	103.7	100.0	93.0	113.4	109.9	60	60	60	0	0	0
TD15	Track Dozer 15 (NPAG/OB -CAT D9)	m8	71.8	75.0	78.4	79.1	78.1	76.6	75.9	72.2	65.2	82.1	0	2	10.0	32.8	99.6	102.8	106.2	106.9	105.9	104.4	103.7	100.0	93.0	113.4	109.9	60	60	60	0	0	0
TD16	Track Dozer 16 (NPAG/OB -CAT D9)	m8	71.8	75.0	78.4	79.1	78.1	76.6	75.9	72.2	65.2	82.1	0	2	10.0	32.8	99.6	102.8	106.2	106.9	105.9	104.4	103.7	100.0	93.0	113.4	109.9	60	60	60	0	0	0
TD17	Track Dozer 17 (TMA -CAT D9)	m8	71.8	75.0	78.4	79.1	78.1	76.6	75.9	72.2	65.2	82.1	0	2	10.0	32.8	99.6	102.8	106.2	106.9	105.9	104.4	103.7	100.0	93.0	113.4	109.9	60	60	60	0	0	0
TD18	Track Dozer 18 (TMA -CAT D9)	m8	71.8	75.0	78.4	79.1	78.1	76.6	75.9	72.2	65.2	82.1	0	2	10.0	32.8	99.6	102.8	106.2	106.9	105.9	104.4	103.7	100.0	93.0	113.4	109.9	60	60	60	0	0	0
TD19	Track Dozer 19 (TMA -CAT D9)	m8	71.8	75.0	78.4	79.1	78.1	76.6	75.9	72.2	65.2	82.1	0	2	10.0	32.8	99.6	102.8	106.2	106.9	105.9	104.4	103.7	100.0	93.0	113.4	109.9	60	60	60	0	0	0
TD20	Track Dozer 20 (TMA -CAT D9)	m8	71.8	75.0	78.4	79.1	78.1	76.6	75.9	72.2	65.2	82.1	0	2	10.0	32.8	99.6	102.8	106.2	106.9	105.9	104.4	103.7	100.0	93.0	113.4	109.9	60	60	60	0	0	0
TD21	Track Dozer 21 (TMA -CAT D9)	m8	71.8	75.0	78.4	79.1	78.1	76.6	75.9	72.2	65.2	82.1	0	2	10.0	32.8	99.6	102.8	106.2	106.9	105.9	104.4	103.7	100.0	93.0	113.4	109.9	60	60	60	0	0	0

Appendix D - Noise Sources & Calculations
Table D1: Equipment Summary

New sources added or modified as part of this updated AAR are higlighted in green.

AAR Source ID	Description		SPL (dB) By Octave Band Centre Frequency (Hz)									SPL Overall	Tonal Penalty	SPL Radiation			PWL (dB) By Octave Band Centre Frequency (Hz)									PWL Overall		Maximum Operating Times			NPC-104 Intermittence Correction Factor		
			31.5	63	125	250	500	1000	2000	4000	8000			Directivity	Distance to Source		31.5	63	125	250	500	1000	2000	4000	8000			Day	Evening	Night	Day	Evening	Night
			(dB)	(dB)	(dB)	(dB)	(dB)	(dB)	(dB)	(dB)	(dB)	(dBA)			(m)	(ft)	(dB)	(dB)	(dB)	(dB)	(dB)	(dB)	(dB)	(dB)	(dB)	(dBA)	(dBA)	(min/h)	(min/h)	(min/h)	(dB)	(dB)	(dB)
TD22	Track Dozer 22 (TMA -CAT D9)	m8	71.8	75.0	78.4	79.1	78.1	76.6	75.9	72.2	65.2	82.1	0	2	10.0	32.8	99.6	102.8	106.2	106.9	105.9	104.4	103.7	100.0	93.0	113.4	109.9	60	60	60	0	0	0
TD23	Track Dozer 23 (TMA -CAT D9)	m8	71.8	75.0	78.4	79.1	78.1	76.6	75.9	72.2	65.2	82.1	0	2	10.0	32.8	99.6	102.8	106.2	106.9	105.9	104.4	103.7	100.0	93.0	113.4	109.9	60	60	60	0	0	0
TD24	Track Dozer 24 (TMA -CAT D9)	m8	71.8	75.0	78.4	79.1	78.1	76.6	75.9	72.2	65.2	82.1	0	2	10.0	32.8	99.6	102.8	106.2	106.9	105.9	104.4	103.7	100.0	93.0	113.4	109.9	60	60	60	0	0	0
TD25	Track Dozer 25 (TMA -CAT D9)	m8	71.8	75.0	78.4	79.1	78.1	76.6	75.9	72.2	65.2	82.1	0	2	10.0	32.8	99.6	102.8	106.2	106.9	105.9	104.4	103.7	100.0	93.0	113.4	109.9	60	60	60	0	0	0
TD26	Track Dozer 26 (TMA -CAT D9)	m8	71.8	75.0	78.4	79.1	78.1	76.6	75.9	72.2	65.2	82.1	0	2	10.0	32.8	99.6	102.8	106.2	106.9	105.9	104.4	103.7	100.0	93.0	113.4	109.9	60	60	60	0	0	0
TD27	Track Dozer 27 (TMA -CAT D9)	m8	71.8	75.0	78.4	79.1	78.1	76.6	75.9	72.2	65.2	82.1	0	2	10.0	32.8	99.6	102.8	106.2	106.9	105.9	104.4	103.7	100.0	93.0	113.4	109.9	60	60	60	0	0	0
WD	Komatsu Wheel Dozer WD900	r1a	--	--	--	--	--	--	--	--	--	--	0	--	--	--	--	116.0	123.0	110.0	112.0	111.0	107.0	98.0	91.0	124.5	115.3	60	60	60	0	0	0
WL1	Komatsu Wheel Loader WA1200	m4	80.9	89.3	91.9	81.2	79.8	78.5	78.2	73.4	68.9	84.7	0	2	15.5	50.9	112.5	120.9	123.5	112.8	111.4	110.1	109.8	105.0	100.5	126.1	116.3	60	60	60	0	0	0
WL2	CAT 994HL	r2	--	--	--	--	--	--	--	--	--	--	0	--	--	--	--	114.0	121.0	108.0	110.0	109.0	105.0	96.0	59.0	122.5	113.3	60	60	60	0	0	0
WL3	CAT 980H Wheel Loader	m23	89.7	99.4	92.4	81.2	82.0	81.0	76.3	70.7	65.2	85.5	0	2	11.0	36.1	118.3	128.0	121.0	109.8	110.6	109.6	104.9	99.3	93.8	129.4	114.2	60	60	60	0	0	0
WL4	CAT 980H Wheel Loader	m23	89.7	99.4	92.4	81.2	82.0	81.0	76.3	70.7	65.2	85.5	0	2	11.0	36.1	118.3	128.0	121.0	109.8	110.6	109.6	104.9	99.3	93.8	129.4	114.2	60	60	60	0	0	0
WL5	CAT 980H Wheel Loader	m23	89.7	99.4	92.4	81.2	82.0	81.0	76.3	70.7	65.2	85.5	0	2	11.0	36.1	118.3	128.0	121.0	109.8	110.6	109.6	104.9	99.3	93.8	129.4	114.2	60	60	60	0	0	0
WL6	CAT 980H Wheel Loader	m23	89.7	99.4	92.4	81.2	82.0	81.0	76.3	70.7	65.2	85.5	0	2	11.0	36.1	118.3	128.0	121.0	109.8	110.6	109.6	104.9	99.3	93.8	129.4	114.2	60	60	60	0	0	0
WP01	Water Pump WP01	m17	83.1	91.9	91.7	80.4	84.0	85.4	84.1	76.9	73.1	89.7	0	2	2.7	8.9	99.5	108.3	108.1	96.8	100.4	101.8	100.5	93.3	89.5	112.7	106.1	60	60	60	0	0	0
WP02	Water Pump WP02	m17	83.1	91.9	91.7	80.4	84.0	85.4	84.1	76.9	73.1	89.7	0	2	2.7	8.9	99.5	108.3	108.1	96.8	100.4	101.8	100.5	93.3	89.5	112.7	106.1	60	60	60	0	0	0
WP03	Water Pump WP03	m17	83.1	91.9	91.7	80.4	84.0	85.4	84.1	76.9	73.1	89.7	0	2	2.7	8.9	99.5	108.3	108.1	96.8	100.4	101.8	100.5	93.3	89.5	112.7	106.1	60	60	60	0	0	0
WP04	Water Pump WP04	m17	83.1	91.9	91.7	80.4	84.0	85.4	84.1	76.9	73.1	89.7	0	2	2.7	8.9	99.5	108.3	108.1	96.8	100.4	101.8	100.5	93.3	89.5	112.7	106.1	60	60	60	0	0	0
WP05	Water Pump WP05	m17	83.1	91.9	91.7	80.4	84.0	85.4	84.1	76.9	73.1	89.7	0	2	2.7	8.9	99.5	108.3	108.1	96.8	100.4	101.8	100.5	93.3	89.5	112.7	106.1	60	60	60	0	0	0
WP06	Water Pump WP06	m17	83.1	91.9	91.7	80.4	84.0	85.4	84.1	76.9	73.1	89.7	0	2	2.7	8.9	99.5	108.3	108.1	96.8	100.4	101.8	100.5	93.3	89.5	112.7	106.1	60	60	60	0	0	0
WP07	Water Pump WP07	m17	83.1	91.9	91.7	80.4	84.0	85.4	84.1	76.9	73.1	89.7	0	2	2.7	8.9	99.5	108.3	108.1	96.8	100.4	101.8	100.5	93.3	89.5	112.7	106.1	60	60	60	0	0	0
WP08	Water Pump WP08	m17	83.1	91.9	91.7	80.4	84.0	85.4	84.1	76.9	73.1	89.7	0	2	2.7	8.9	99.5	108.3	108.1	96.8	100.4	101.8	100.5	93.3	89.5	112.7	106.1	60	60	60	0	0	0
WP09	Water Pump WP09	m17	83.1	91.9	91.7	80.4	84.0	85.4	84.1	76.9	73.1	89.7	0	2	2.7	8.9	99.5	108.3	108.1	96.8	100.4	101.8	100.5	93.3	89.5	112.7	106.1	60	60	60	0	0	0
WP10	Water Pump WP10	m17	83.1	91.9	91.7	80.4	84.0	85.4	84.1	76.9	73.1	89.7	0	2	2.7	8.9	99.5	108.3	108.1	96.8	100.4	101.8	100.5	93.3	89.5	112.7	106.1	60	60	60	0	0	0
WP11	Water Pump WP11	m17	83.1	91.9	91.7	80.4	84.0	85.4	84.1	76.9	73.1	89.7	0	2	2.7	8.9	99.5	108.3	108.1	96.8	100.4	101.8	100.5	93.3	89.5	112.7	106.1	60	60	60	0	0	0
WP12	Water Pump WP12	m17	83.1	91.9	91.7	80.4	84.0	85.4	84.1	76.9	73.1	89.7	0	2	2.7	8.9	99.5	108.3	108.1	96.8	100.4	101.8	100.5	93.3	89.5	112.7	106.1	60	60	60	0	0	0
WP13	Water Pump WP13	m17	83.1	91.9	91.7	80.4	84.0	85.4	84.1	76.9	73.1	89.7	0	2	2.7	8.9	99.5	108.3	108.1	96.8	100.4	101.8	100.5	93.3	89.5	112.7	106.1	60	60	60	0	0	0
WP14	Water Pump WP14	m17	83.1	91.9	91.7	80.4	84.0	85.4	84.1	76.9	73.1	89.7	0	2	2.7	8.9	99.5	108.3	108.1	96.8	100.4	101.8	100.5	93.3	89.5	112.7	106.1	60	60	60	0	0	0
WP15	Water Pump WP15	m17	83.1	91.9	91.7	80.4	84.0	85.4	84.1	76.9	73.1	89.7	0	2	2.7	8.9	99.5	108.3	108.1	96.8	100.4	101.8	100.5	93.3	89.5	112.7	106.1	60	60	60	0	0	0
WP16	Water Pump WP16	m17	83.1	91.9	91.7	80.4	84.0	85.4	84.1	76.9	73.1	89.7	0	2	2.7	8.9	99.5	108.3	108.1	96.8	100.4	101.8	100.5	93.3	89.5	112.7	106.1	60	60	60	0	0	0
WP17	Water Pump WP17	m17	83.1	91.9	91.7	80.4	84.0	85.4	84.1	76.9	73.1	89.7	0	2	2.7	8.9	99.5	108.3	108.1	96.8	100.4	101.8	100.5	93.3	89.5	112.7	106.1	60	60	60	0	0	0
WP18	Water Pump WP18	m17	83.1	91.9	91.7	80.4	84.0	85.4	84.1	76.9	73.1	89.7	0	2	2.7	8.9	99.5	108.3	108.1	96.8	100.4	101.8	100.5	93.3	89.5	112.7	106.1	60	60	60	0	0	0
WP19	Water Pump WP19	m17	83.1	91.9	91.7	80.4	84.0	85.4	84.1	76.9	73.1	89.7	0	2	2.7	8.9	99.5	108.3	108.1	96.8	100.4	101.8	100.5	93.3	89.5	112.7	106.1	60	60	60	0	0	0
WS	Wet Scrubber			--	--	--	--	--	--	--	--	--	0	--	--	--	--	--	--	--	--	--	--	--	--	--	105.0	60	60	60	0	0	0
MGR_OPMill	Motor Grader Route Open Pit to Mill	m6	80.5	84.8	86.4	81.5	80.3	77.6	75.2	71.5	68.2	83.1	0	2	10.0	32.8	108.3	112.6	114.2	109.3	108.1	105.4	103.0	99.3	96.0	118.6	110.9	60	60	60	1 trips/h	1 trips/h	1 trips/h
MGR_SP	Motor Grader Route Stockpile	m6	80.5	84.8	86.4	81.5	80.3	77.6	75.2	71.5	68.2	83.1	0	2	10.0	32.8	108.3	112.6	114.2	109.3	108.1	105.4	103.0	99.3	96.0	118.6	110.9	60	60	60	1 trips/h	1 trips/h	1 trips/h
MGR_PAG	Motor Grader Route PAG	m6	80.5	84.8	86.4	81.5	80.3	77.6	75.2	71.5	68.2	83.1	0	2	10.0	32.8	108.3	112.6	114.2	109.3	108.1	105.4	103.0	99.3	96.0	118.6	110.9	60	60	60	1 trips/h	1 trips/h	1 trips/h
MGR_NPAG	Motor Grader Route NPAG	m6	80.5	84.8	86.4	81.5	80.3	77.6	75.2	71.5	68.2	83.1	0	2	10.0	32.8	108.3	112.6	114.2	109.3	108.1	105.4	103.0	99.3	96.0	118.6	110.9	60	60	60	1 trips/h	1 trips/h	1 trips/h
MGR_OB	Motor Grader Route OB	m6	80.5	84.8	86.4	81.5	80.3	77.6	75.2	71.5	68.2	83.1	0	2	10.0	32.8	108.3	112.6	114.2	109.3	108.1	105.4	103.0	99.3	96.0	118.6	110.9	60	60	60	1 trips/h	1 trips/h	1 trips/h
TRE_OP-Mill	Truck Route Open Pit to Mill (Empty Truck)	m2	83.1	87.8	84.6	77.9	75.9	72.1	68.7	63.9	57.2	78.1	0	2	16.0	52.5	115.0	119.7	116.5	109.8	107.8	104.0	100.6	95.8	89.1	122.8	110.0	60	60	60	6 trips/h	6 trips/h	6 trips/h
TRE_OP-LGO	Truck Route Open Pit to LGO (Empty Truck)	m2	83.1	87.8	84.6	77.9	75.9	72.1	68.7	63.9	57.2	78.1	0	2	16.0	52.5	115.0	119.7	116.5	109.8	107.8	104.0	100.6	95.8	89.1	122.8	110.0	60	60	60	3 trips/h	3 trips/h	3 trips/h
TRE_OP-PAG	Truck Route Open Pit to PAG (Empty Truck)	m2	83.1	87.8	84.6	77.9	75.9	72.1	68.7	63.9	57.2	78.1	0	2	16.0	52.5	115.0	119.7	116.5	109.8	107.8	104.0	100.6	95.8	89.1	122.8	110.0	60	60	60	16 trips/h	16 trips/h	16 trips/h
TRE_OP-NPAG	Truck Route Open Pit to NPAG (Empty Truck)	m2	83.1	87.8	84.6	77.9	75.9	72.1	68.7	63.9	57.2	78.1	0	2	16.0	52.5	115.0	119.7	116.5	109.8	107.8	104.0	100.6	95.8	89.1	122.8	110.0	60	60	60	11 trips/h	11 trips/h	11 trips/h
TRE_OP-OB	Truck Route Open Pit to Overburden (Empty Truck)	m2	83.1	87.8	84.6	77.9	75.9	72.1	68.7	63.9	57.2	78.1	0	2	16.0	52.5	115.0	119.7	116.5	109.8	107.8	104.0	100.6	95.8	89.1	122.8	110.0	60	60	60	2 trips/h	2 trips/h	2 trips/h
TRE_OP-TMA	Truck Route Open Pit to TMA Staging Area (Empty Truck)	m2	83.1	87.8	84.6	77.9	75.9	72.1	68.7	63.9	57.2	78.1	0	2	16.0	52.5	115.0	119.7	116.5	109.8	107.8	104.0	100.6	95.8	89.1	122.8	110.0	60	60	60	5 trips/h	5 trips/h	5 trips/h
TRE_TMA1	Truck Route TMA Staging Area to TMA Dam (Empty Truck)	m24	74.4	86.8	83.0	82.4	74.9	72.8	68.7	63.9	56.9	78.8	0	2	10.0	32.8	102.2	114.6	110.8	110.2	102.7	100.6	96.5	91.7	84.7	117.5	106.6	60	60	60	8 trips/h	No. Op.	No. Op.
TRE_TMA2	Truck Route TMA Staging Area to TMA Dam (Empty Truck)	m24	74.4	86.8	83.0	82.4	74.9	72.8	68.7	63.9	56.9	78.8	0	2	10.0	32.8	102.2	114.6	110.8	110.2	102.7	100.6	96.5	91.7	84.7	117.5	106.6	60	60	60	8 trips/h	No. Op.	No. Op.
TRL_OP-Mill	Truck Route Open Pit to Mill (Loaded Truck)	m3	90.3	99.4	102.6	89.4	83.9	77.7	72.9	68.6	64.9	89.1	0	2	16.0	52.5	122.2	131.3	134.5	121.3	115.8	109.6	104.8	100.5	96.8	136.5	121.0	60	60	60	6 trips/h	6 trips/h	6 trips/h
TRL_OP-LGO	Truck Route Open Pit to LGO (Loaded Truck)	m3	90.3	99.4	102.6	89.4	83.9	77.7	72.9	68.6	64.9	89.1	0	2	16.0	52.5	122.2	131.3	134.5	121.3	115.8	109.6	104.8	100.5	96.8	136.5	121.0	60	60	60	3 trips/h	3 trips/h	3 trips/h
TRL_OP-PAG	Truck Route Open Pit to PAG (Loaded Truck)	m3	90.3	99.4	102.6	89.4	83.9	77.7	72.9	68.6	64.9	89.1	0	2	16.0	52.5	122.2	131.3	134.5	121.3	115.8	109.6	104.8	100.5	96.8	136.5	121.0	60	60	60	16 trips/h	16 trips/h	16 trips/h
TRL_OP-NPAG	Truck Route Open Pit to NPAG (Loaded Truck)	m3	90.3	99.4	102.6	89.4	83.9	77.7	72.9	68.6	64.9	89.1	0	2	16.0	52.5	122.2	131.3	134.5	121.3	115.8	109.6	104.8	100.5	96.8	136.5	121.0	60	60	60	11 trips/h	11 trips/h	11 trips/h
TRL_OP-OB	Truck Route Open Pit to Overburden (Loaded Truck)	m3	90.3	99.4	102.6	89.4	83.9	77.7	72.9	68.6	64.9	89.1	0	2	16.0	52.5	122.2	131.3	134.5	121.3	115.8	109.6	104.8	100.5	96.8	136.5	121.0	60	60	60	2 trips/h	2 trips/h	2 trips/h
TRL_OP-TMA	Truck Route Open Pit to TMA Staging Area (Loaded Truck)	m3	90.3	99.4	102.6	89.4	83.9	77.7	72.9	68.6	64.9	89.1	0	2	16.0	52.5	122.2	131.3	134.5	121.3	115.8	109.6	104.8	100.5	96.8	136.5	121.0	60	60	60	5 trips/h	5 trips/h	5 trips/h
TRL_TMA1	Truck Route TMA Staging Area to TMA Dam	m24	74.4	86.8	83.0	82.4	74.9	72.8	68.7	63.9	56.9	78.8	0	2	10.0	32.8	102.2	114.6	110.8	110.2	102.7	100.6	96.5	91.7	84.7	117.5	106.6	60	60	60	8 trips/h	No. Op.	No. Op.
TRL_TMA2	Truck Route TMA Staging Area to TMA Dam	m24	74.4	86.8	83.0	82.4	74.9	72.8	68.7	63.9	56.9	78.8	0	2	10.0	32.8	102.2	114.6	110.8	110.2	102.7	100.6	96.5	91.7	84.7	117.5	106.6	60	60	60	8 trips/h	No. Op.	No. Op.
WTR_OPMill	Water Truck Route Open Pit to Mill	m16	73.4	78.7	84.5	82.0	79.6	81.9	79.6	72.3	65.7	85.6	0	2	9.5	31.2	100.8	106.1	111.9	109.4	107.0	109.3	107.0	99.7	93.1	116.9	113.0	60	60	60	2 trips/h	2 trips/h	2 trips/h
WTR_SP	Water Truck Route Stockpile	m16	73.4	78.7	84.5	82.0	79.6	81.9	79.6	72.3	65.7	85.6	0	2	9.5	31.2	100.8	106.1	111.9	109.4	107.0	109.3	107.0	99.7	93.1	116.9	113.0	60	60	60	2 trips/h	2 trips/h	2 trips/h
WTR_PAG	Water Truck Route PAG	m16	73.4	78.7	84.5	82.0	79.6	81.9	79.6	72.3	65.7	85.6	0	2	9.5	31.2	100.8	106.1	111.9	109.4	107.0	109.3	107.0	99.7	93.1	116.9	113.0	60	60	60	2 trips/h	2 trips/h	2 trips/h
WTR_NPAG	Water Truck Route NPAG	m16	73.4	78.7	84.5	82.0	79.6	81.9	79.6	72.3	65.7	85.6	0	2	9.5	31.2	100.8	106.1	111.9	109.4	107.0	109.3	107.0	99.7	93.1	116.9	113.0	60	60	60	2 trips/h	2 trips/h	2 trips/h
WTR_OB	Water Truck Route OB	m16	73.4	78.7	84.5	82.0	79.6	81.9	79.6	72.3	65.7	85.6	0	2	9.5	31.2	100.8	106.1	111.9	109.4	107.0	109.3	107.0	99.7	93.1	116.9	113.0	60	60	60	2 trips/h	2 trips/h	2 trips/h
EG1	Emergency Generator 1 (CAT 2.5 MW)		--	100.0	110.0	100.0	91.0	85.0	85.0	82.0	86.0	97.5	0	2	15.0	49.2	--	131.3	141.3	131.3	122.3	116.3	116.3	113.3	117.3	142.2	128.8	60	0	0	0	No. Op.	No. Op.
EG2	Emergency Generator 2 (CAT 2.5 MW)		--	100.0	110.0	100.0	91.0	85.0	85.0	82.0	86.0	97.5	0	2	15.0	49.2	--	131.3	141.3	131.3	122.3	116.3	116.3	113.3	117.3	142.2	128.8	60	0	0	0	No. Op.	No. Op.
FP1	Fire Pump 1			--	--	--	--	--	--	--	--	--	0	--	--	--	--	129.0	133.4	128.1	130.3	129.9	132.6	128.8	119.5	139.3	137.0	60	0	0	0	No. Op.	No. Op.
FP2	Fire Pump 2			--	--	--	--	--	--	--	--	--	0	--	--	--	--	129.0	133.4	128.1	130.3	129.9	132.6	128.8	119.5	139.3	137.0	60	0	0	0	No. Op.	No. Op.

Notes
1a: Sound level estimated using manufacturer data as identified in previous AARs
1b: Measured sound levels of an equipment having same model. As measured in previous AARs
1c: Measured by Trinity and/or New Gold
1d: Sound level estimated using manufacturer data as identified in previous AARs. Spectrum corrections of similar equipment applied to overall PWL from manufacturer to obtain sound level in octave bands.
2: Adjusted PWL contains both adjustments for tonality and intermittence

Appendix D - Noise Sources & Calculations
Table D1: Equipment Summary

POR ID	POR Description	X Coordinate (m)	Y Coordinate (m)	Grade Height (MASL) (m)	Height of POR Above Grade (m)	POR Elevation (MASL) (m)
POR1a	House 01 – North - Outdoor POR	424431.2	5415466.6	388.1	1.5	389.6
POR1b	House 01 – North - 1st Storey POR	424437.0	5415498.0	388.2	1.5	389.7
POR1	House 01 – North - 2nd Storey POR	424437.0	5415498.0	388.2	4.5	392.7
POR2a	House 02 – East - Outdoor POR	431218.2	5412514.4	382.9	1.5	384.4
POR2b	House 02 – East - 1st Storey POR	431274.0	5412538.0	382.9	1.5	384.4
POR2	House 02 – East - 2nd Storey POR	431274.0	5412538.0	382.9	4.5	387.4
POR3a	House 03 – East - Outdoor POR	431559.7	5411858.4	384.0	1.5	385.5
POR3b	House 03 – East - 1st Storey POR	431587.0	5411870.0	384.0	1.5	385.5
POR3	House 03 – East - 2nd Storey POR	431587.0	5411870.0	384.0	4.5	388.5
POR4a	House 04 – East - Outdoor POR	431470.7	5411627.1	384.0	1.5	385.5
POR4b	House 04 – East - 1st Storey POR	431496.0	5411644.0	384.0	1.5	385.5
POR4	House 04 – East - 2nd Storey POR	431496.0	5411644.0	384.0	4.5	388.5
POR6a	House 06 – Southeast - Outdoor POR	431048.6	5408674.3	372.0	1.5	373.5
POR6b	House 06 – Southeast - 1st Storey POR	431077.0	5408660.0	372.0	1.5	373.5
POR6	House 06 – Southeast - 2nd Storey POR	431077.0	5408660.0	372.0	4.5	376.5
POR7a	House 07 – South - Outdoor POR	431021.2	5406876.1	369.7	1.5	371.2
POR7b	House 07 – South - 1st Storey POR	431034.0	5406873.0	369.8	1.5	371.3
POR7	House 07 – South - 2nd Storey POR	431034.0	5406873.0	369.8	4.5	374.3
POR8a	House 08 – South - Outdoor POR	430109.8	5406728.0	362.1	1.5	363.6
POR8b	House 08 – South - 1st Storey POR	430117.0	5406700.0	363.4	1.5	364.9
POR8	House 08 – South - 2nd Storey POR	430117.0	5406700.0	363.4	4.5	367.9
POR9a	House 09 – South - Outdoor POR	429793.4	5406545.7	360.7	1.5	362.2
POR9b	House 09 – South - 1st Storey POR	429796.0	5406515.0	361.5	1.5	363.0
POR9	House 09 – South - 2nd Storey POR	429796.0	5406515.0	361.5	4.5	366.0
POR10a	House 10 – South - Outdoor POR	429112.9	5406656.1	360.0	1.5	361.5
POR10b	House 10 – South - 1st Storey POR	429116.0	5406626.0	360.0	1.5	361.5
POR10	House 10 – South - 2nd Storey POR	429116.0	5406626.0	360.0	4.5	364.5
POR11a	House 11 – South - Outdoor POR	428581.2	5406648.4	360.0	1.5	361.5
POR11b	House 11 – South - 1st Storey POR	428590.0	5406620.0	360.0	1.5	361.5
POR11	House 11 – South - 2nd Storey POR	428590.0	5406620.0	360.0	4.5	364.5
POR12a	House 12 – South - Outdoor POR	428162.7	5406976.0	360.0	1.5	361.5
POR12b	House 12 – South - 1st Storey POR	428175.0	5406947.0	360.0	1.5	361.5
POR12	House 12 – South - 2nd Storey POR	428175.0	5406947.0	360.0	4.5	364.5
POR14a	House 14 – South - Outdoor POR	427455.1	5406979.9	360.0	1.5	361.5
POR14b	House 14 – South - 1st Storey POR	427450.0	5406952.0	360.0	1.5	361.5
POR14	House 14 – South - 2nd Storey POR	427450.0	5406952.0	360.0	4.5	364.5
POR15a	House 15 – West - Outdoor POR	419621.2	5410207.5	353.5	1.5	355.0
POR15b	House 15 – West - 1st Storey POR	419623.0	5410178.0	353.4	1.5	354.9
POR15	House 15 – West - 2nd Storey POR	419623.0	5410178.0	353.4	4.5	357.9
POR16a	House 16 – West - Outdoor POR	419635.0	5410341.4	354.2	1.5	355.7
POR16b	House 16 – West - 1st Storey POR	419645.0	5410314.0	354.1	1.5	355.6
POR16	House 16 – West - 2nd Storey POR	419645.0	5410314.0	354.1	4.5	358.6
POR17a	House 17 – Northwest - Outdoor POR	419848.0	5413553.6	369.7	1.5	371.2
POR17b	House 17 – Northwest - 1st Storey POR	419827.0	5413577.0	369.7	1.5	371.2
POR17	House 17 – Northwest - 2nd Storey POR	419827.0	5413577.0	369.7	4.5	374.2
POR19	Vacant Lot Near Pinewood River	416140.0	5407200.0	345.0	4.5	349.5
POR20	Vacant Lot 56041-0138	425325.0	5406877.0	370.4	4.5	374.9
POR21	Vacant Lot 56036-0023	429474.0	5408438.0	378.8	4.5	383.3
POR22	Vacant Lot 56036-0184	428602.0	5406751.0	360.0	4.5	364.5
POR23	Vacant Lot 56041-0037	424360.0	5407033.0	362.6	4.5	367.1
POR24	Vacant Lot 56041-0135	425216.0	5406873.0	369.9	4.5	374.4
POR25	Vacant Lot 56041-0139	426109.0	5406850.0	373.8	4.5	378.3

Note: For each of the existing dwellings, the POR Impact Summary Table and the Acoustic Assessment Summary Table only provide the noise

Appendix D - Noise Sources & Calculations
Table D1: Equipment Summary

POR ID	POR Description	X Coordinate (m)	Y Coordinate (m)	Grade Height (MASL) (m)	Height of POR Above Grade (m)	POR Elevation (MASL) (m)
POR1a	House 01 – North - Outdoor POR	424431.2	5415466.6	388.1	1.5	389.6
POR1b	House 01 – North - 1st Storey POR	424437.0	5415498.0	388.2	1.5	389.7
POR1	House 01 – North - 2nd Storey POR	424437.0	5415498.0	388.2	4.5	392.7
POR2a	House 02 – East - Outdoor POR	431218.2	5412514.4	382.9	1.5	384.4
POR2b	House 02 – East - 1st Storey POR	431274.0	5412538.0	382.9	1.5	384.4
POR2	House 02 – East - 2nd Storey POR	431274.0	5412538.0	382.9	4.5	387.4
POR3a	House 03 – East - Outdoor POR	431559.7	5411858.4	384.0	1.5	385.5
POR3b	House 03 – East - 1st Storey POR	431587.0	5411870.0	384.0	1.5	385.5

Appendix D - Noise Sources & Calculations
Table D4: Summary of Sources and Distance to PORs

New sources added or modified as part of this updated AAR are higlighted in green.

SOURCE INFORMATION								DISTANCE TO PORs																							
AAR Source ID	Description	Source Type	X Coordinate	Y Coordinate	Grade Height (MASL)	Height of Source Above Grade	Source Elevation (MASL)	POR1	POR2	POR3	POR4	POR6	POR7	POR8	POR9	POR10	POR11	POR12	POR14	POR15	POR16	POR17	POR19	POR20	POR21	POR22	POR23	POR24	POR25
			m	m	m	m	m	m	m	m	m	m	m	m	m	m	m	m	m	m	m	m	m	m	m	m	m	m	m
AC1	WMP Air Compressor 1	Point	421213.7	5411429.5	364.2	2.5	366.7	5191	10121	10383	10285	10245	10826	10082	9890	9248	8806	8280	7677	2024	1925	2556	6605	6134	8785	8745	5406	6065	6703
AC2	WMP Air Compressor 2	Point	420461.4	5411544.6	364.1	2.5	366.6	5607	10858	11130	11035	11001	11559	10803	10603	9955	9504	8980	8363	1603	1477	2129	6128	6741	9533	9447	5963	6666	7344
AC3	WMP Air Compressor 3	Point	420185.8	5412295.1	363.1	2.5	365.6	5323	11091	11409	11329	11482	12128	11399	11215	10578	10141	9614	9018	2191	2054	1331	6506	7468	10057	10078	6717	7396	8046
AC4	WMP Air Compressor 4	Point	421338.2	5411992.6	370.0	2.5	372.5	4679	9951	10250	10164	10293	10964	10251	10077	9450	9025	8497	7922	2497	2384	2190	7070	6486	8878	8958	5808	6422	7015
BD1	Blast Hole Drill 1 - Sandvik DP1500i	Point	425446.2	5409606.2	180.8	4.0	184.8	5978	6524	6545	6384	5710	6220	5501	5336	4727	4336	3810	3326	5851	5844	6881	9612	2732	4194	4256	2793	2743	2835
BD2	Blast Hole Drill 2- Sandvik D75KS	Point	425462.1	5409605.9	182.5	4.0	186.5	5981	6510	6530	6369	5694	6206	5487	5323	4715	4324	3799	3316	5867	5860	6894	9628	2732	4178	4244	2799	2744	2831
BD3	Blast Hole Drill 3- Sandvik D75KS	Point	425443.9	5409572.2	270.8	4.0	274.8	6011	6541	6559	6397	5706	6208	5485	5319	4708	4314	3788	3300	5852	5846	6898	9602	2698	4187	4235	2761	2709	2802
BD4	Blast Hole Drill 4- Sandvik D75KS	Point	425472.2	5409585.0	192.9	4.0	196.9	6003	6510	6528	6366	5681	6188	5468	5303	4694	4302	3777	3293	5879	5873	6914	9632	2712	4163	4222	2784	2724	2808
BD5	Blast Hole Drill 5- Sandvik D75KS	Point	425476.7	5409705.7	190.0	4.0	194.0	5885	6452	6482	6324	5697	6238	5529	5370	4767	4383	3859	3388	5873	5863	6849	9667	2833	4193	4301	2897	2845	2925
C	Crusher	Point	426774.9	5410209.0	393.0	4.0	397.0	5783	5066	5091	4934	4572	5410	4846	4772	4280	4022	3550	3326	7152	7131	7721	11052	3634	3228	3911	3990	3682	3424
DC1	Dust Collector 1	Point	426780.2	5410251.1	393.0	4.0	397.0	5746	5042	5072	4917	4582	5432	4873	4801	4312	4057	3586	3366	7158	7135	7708	11069	3675	3247	3946	4027	3723	3467
DC2	Dust Collector 2	Point	426611.9	5410474.1	371.0	4.0	375.0	5474	5098	5167	5022	4820	5703	5151	5081	4591	4332	3858	3620	6995	6969	7461	10972	3820	3512	4222	4112	3862	3659
E1	Komatsu Diesel Excavator PC5500	Point	425413.3	5409602.2	264.1	4.0	268.1	5976	6555	6577	6416	5742	6248	5527	5361	4751	4357	3831	3342	5819	5812	6856	9579	2727	4224	4277	2777	2736	2839
E2	Komatsu Diesel Excavator PC5500	Point	425547.0	5409599.2	180.0	4.0	184.0	6002	6437	6453	6291	5609	6127	5412	5250	4645	4259	3734	3260	5952	5945	6967	9708	2731	4095	4177	2827	2746	2806
E3	Komatsu Diesel Excavator PC8000	Point	425503.2	5409575.7	192.5	4.0	196.5	6017	6487	6502	6340	5648	6156	5437	5272	4664	4274	3748	3267	5911	5905	6945	9660	2705	4131	4193	2788	2718	2792
E4	Komatsu Diesel Excavator PC3000	Point	425597.7	5409592.5	180.0	4.0	184.0	6018	6395	6408	6245	5558	6079	5366	5205	4602	4218	3693	3225	6003	5996	7013	9756	2729	4045	4135	2843	2746	2790
E5	Komatsu Diesel Excavator PC800LC	Point	425594.6	5409554.6	193.5	4.0	197.5	6055	6415	6424	6260	5555	6065	5348	5186	4580	4193	3669	3196	6004	5998	7032	9743	2691	4037	4112	2808	2708	2753
E6	Komatsu Diesel Excavator PC360LC	Point	425560.4	5409585.0	183.3	4.0	187.3	6019	6432	6445	6283	5594	6109	5393	5231	4626	4239	3714	3241	5967	5960	6986	9718	2718	4078	4157	2820	2734	2789
E7	Komatsu Diesel Excavator PC360LC	Point	423590.4	5411533.3	360.0	4.0	364.0	4054	7749	8004	7906	8019	8782	8121	7981	7390	7010	6485	5990	4192	4129	4282	8619	4969	6648	6927	4566	4936	5318
E8	Komatsu Diesel Excavator PC360LC	Point	424128.6	5412094.4	365.2	4.0	369.2	3418	7159	7462	7381	7751	8657	8060	7953	7401	7062	6547	6122	4896	4824	4550	9369	5353	6476	6969	5067	5333	5606
E9	Komatsu Diesel Excavator PC360LC	Point	423966.2	5411870.4	363.7	4.0	367.7	3658	7338	7621	7533	7802	8656	8035	7916	7350	6996	6477	6027	4661	4593	4477	9114	5175	6490	6906	4853	5151	5459
E10	Komatsu Diesel Excavator PC360LC	Point	423601.0	5411843.4	363.8	4.0	367.8	3749	7704	7986	7898	8126	8942	8301	8171	7592	7223	6700	6224	4313	4241	4153	8788	5257	6789	7137	4870	5226	5588
E11	Komatsu Diesel Excavator PC360LC	Point	423119.7	5411907.7	365.5	4.0	369.5	3824	8179	8467	8380	8595	9380	8723	8582	7991	7608	7083	6581	3901	3823	3692	8419	5493	7240	7526	5030	5454	5875
E12	Komatsu Diesel Excavator PC360LC	Point	422771.5	5412032.7	367.1	4.0	371.1	3845	8518	8817	8733	8964	9741	9077	8932	8336	7947	7420	6907	3654	3568	3325	8206	5753	7606	7867	5246	5709	6164
E13	Komatsu Diesel Excavator PC360LC	Point	422600.1	5412038.5	366.2	4.0	370.2	3917	8688	8988	8905	9125	9890	9220	9071	8471	8077	7550	7028	3511	3421	3171	8071	5837	7760	7999	5306	5790	6264
E14	Komatsu Diesel Excavator PC360LC	Point	422487.3	5412003.8	364.7	4.0	368.7	4001	8803	9101	9016	9218	9969	9292	9140	8536	8138	7611	7082	3397	3307	3091	7960	5860	7844	8061	5312	5811	6299
E15	Komatsu Diesel Excavator PC360LC	Point	422255.5	5411893.6	362.2	4.0	366.2	4213	9042	9332	9244	9396	10113	9422	9262	8650	8242	7714	7170	3142	3051	2955	7709	5881	8003	8169	5297	5828	6347
E16	Komatsu Diesel Excavator PC360LC	Point	422092.2	5411823.2	362.9	4.0	366.9	4359	9210	9495	9405	9525	10221	9521	9355	8738	8324	7796	7241	2967	2875	2865	7537	5909	8121	8253	5300	5853	6393
E17	Komatsu Diesel Excavator PC360LC	Point	426811.1	5409918.0	375.0	4.0	379.0	6064	5175	5159	4993	4448	5206	4614	4527	4019	3747	3269	3034	7193	7177	7885	11012	3385	3047	3638	3786	3438	3147
E18	Komatsu Diesel Excavator PC360LC	Point	426831.1	5409879.3	375.0	4.0	379.0	6108	5178	5156	4988	4417	5167	4572	4484	3975	3704	3226	2992	7214	7199	7920	11022	3359	3010	3595	3769	3413	3114
EO_PC	EO Portable Plant - Elrus 3054 Jaw Crusher	Point	427748.1	5409524.2	387.0	3.0	390.0	6830	4638	4499	4306	3439	4222	3686	3640	3205	3024	2612	2589	8151	8141	8898	11838	3589	2039	2902	4205	3666	3137
EO_SCNR	EO Portable Plant - Terex 380 MVP Cone and Screener	Point	427738.4	5409531.9	387.0	3.0	390.0	6819	4641	4503	4311	3451	4234	3698	3652	3216	3034	2622	2596	8141	8131	8886	11830	3588	2052	2912	4202	3665	3138
EO_GENSET	EO Portable Plant - Genset	Point	427746.8	5409532.5	387.0	3.0	390.0	6822	4634	4496	4303	3443	4228	3693	3648	3213	3032	2621	2597	8149	8139	8893	11839	3594	2045	2910	4209	3671	3143
EO_FEL	EO Portable Plant - Wheel Loader (Doolan DL420)	Point	427734.5	5409525.7	387.0	4.0	391.0	6822	4648	4510	4317	3453	4234	3696	3649	3212	3029	2616	2589	8138	8128	8885	11825	3581	2052	2907	4195	3658	3131
MBPA_PC	Portable Plant - Powerscreen Premiertrak 600 Jaw Crusher	Point	426752.4	5410208.8	393.0	3.0	396.0	5774	5086	5112	4956	4594	5428	4861	4786	4292	4032	3559	3331	7130	7108	7701	11031	3625	3247	3921	3976	3673	3420
MBPA_GENSET	Portable Plant - CAT C13 Genset	Point	426732.2	5410209.0	393.0	3.0	396.0	5766	5104	5131	4975	4613	5444	4875	4799	4304	4041	3567	3335	7109	7088	7683	11011	3617	3264	3931	3964	3664	3416
MB_W-E	Mill Building - Wall - East	V. Area	425598.8	5409569.9	186.7	4.0	190.7	6041	6404	6415	6251	5553	6068	5353	5191	4587	4201	3676	3206	6007	6000	7026	9751	2707	4037	4119	2823	2724	2767
MB_W-N	Mill Building - Wall - North	V. Area	425818.8	5411706.8	370.2	4.0	374.2	4035	5518	5770	5678	6077	7111	6599	6540	6057	5793	5311	5027	6382	6329	6277	10677	4855	4904	5684	4896	4871	4865
MB_BD-E	Mill Building - Bay Door - West	V. Area	425774.6	5411610.4	369.0	4.0	373.0	4111	5577	5818	5721	6068	7078	6555	6491	6001	5730	5245	4950	6316	6265	6264	10596	4755	4873	5622	4791	4770	4772
RD1	RC Drill Sandvik DR580	Point	425632.8	5409589.1	195.0	4.0	199.0	6029	6366	6376	6213	5523	6046	5334	5175	4573	4191	3667	3203	6039	6031	7043	9789	2729	4010	4107	2855	2748	2780
RD2	RC Drill Sandvik DR580	Point	425598.8	5409569.9	186.7	4.0	190.7	6041	6404	6415	6251	5553	6068	5353	5191	4587	4201	3676	3206	6007	6000	7026	9751	2707	4037	4119	2823	2724	2767
RD3	RC Drill Sandvik DR560	Point	425665.9	5409629.4	290.7	3.0	293.7	5996	6317	6331	6168	5497	6034	5329	5173	4574	4196	3673	3217	6068	6060	7048	9831	2773	3990	4112	2906	2793	2814
T1	Transformer 1	Point	426722.5	5411203.2	370.6	4.0	374.6	4865	4743	4910	4794	5043	6111	5639	5606	5165	4949	4497	4313	7173	7133	7293	11314	4546	3901	4833	4793	4585	4396
T2	Transformer 2	Point	426722.3	5411191.1	370.5	4.0	374.5	4876	4747	4912	4795	5037	6102	5630	5596	5155	4938	4486	4301	7171	7131	7296	11310	4535	3892	4822	4782	4573	4384
TD01	Track Dozer 01 (Pit - Komatsu D475)	Point	425616.1	5409573.5	192.0	4.0	196.0	6041	6388	6397	6234	5537	6054	5340	5179	4576	4191	3667	3199	6023	6017	7039	9769	2712	4022	4109	2834	2730	2768
TD02	Track Dozer 02 (Pit -CAT D10)	Point	425399.2	5409661.8	187.8	4.0	191.8	5915	6541	6570	6411	5766	6287	5570	5407	4799	4408	3883	3398	5799	5791	6810	9581	2786	4255	4328	2827	2795	2900
TD03	Track Dozer 03 (Pit -CAT D10)	Point	425498.2	5409623.4	180.0	4.0	184.0	5970	6470	6490	6329	5661	6181	5466	5304	4698	4310	3785	3308	5901	5894	6913	9667	2752	4149	4229	2829	2765	2840
TD04	Track Dozer 04 (Pit -CAT D10)	Point	425597.4	5409636.8	180.0	4.0	184.0	5975	6375	6392	6231	5566	6099	5390	5232	4631	4249	3725	3262	5999	5991	6987	9766	2773	4058	4166	2883	2790	2833
TD05	Track Dozer 05 (PAG - Komatsu D375)	Point	427911.1	5409979.3	372.0	4.0	376.0	6521	4226	4134	3953	3430	4405	3952	3944	3563	3427	3044	3062	8290	8273	8848	12095	4039	2195	3301	4614	4112	3611
TD06	Track Dozer 06 (PAG - Komatsu D375)	Point	428580.0	5409053.5	396.0	4.0	400.0	7661	4404	4120	3900	2528	3283	2811	2815	2486	2434	2145	2386	9027	9023	9853	12577	3916	1085	2303	4679	4009	3311
TD07D	Track Dozer 07 (PAG - Komatsu D475)	Point	427582.3	5410173.0	375.0	4.0	379.0	6185	4384	4349	4181	3808	4775	4300	4276	3864	3693	3280	3224	7959	7939	8470	11822	3995	2567	3571	4499	4061	3635
TD07N	Track Dozer 07 (PAG - CAT D10)	Point	427567.4	5410169.5	375.0	4.0	379.0	6180	4399	4365	4196	3820	4784	4306	4280	3867	3694	3279	3220	7944	7924	8457	11807	3984	2575	3572	4486	4049	3626
TD08D	Track Dozer 08 (PAG - Komatsu D475)	Point	427643.6	5410128.6	375.0	4.0	379.0	6254	4357	4311	4140	3734	4700	4228	4206	3800	3634	3226	3183	8021	8001	8543	11871	3994	2492	3511	4513	4061	3620
TD08N	Track Dozer 08 (PAG - CAT D10)	Point	427631.5	5410131.5	375.0	4.0	379.0	6245	4366	4321	4150	3747	4711	4237	4215	3807	3640	3231	3185	8009	7989	8531	11859	3989	2503	3517	4506	4056	3617
TD09	Track Dozer 09 (Ore -CAT D9)	Point	427330.8	5409496.4	396.0	4.0	400.0	6663	4980	4873	4686	3838	4538	3948	3869	3380	3140	2686	2547	7738	7729	8542	11424	3299	2390	3025	3859	3370	2915
TD10	Track Dozer 10 (Ore -CAT D8)	Point	428126.2	5409769.5	390.0	4.0	394.0	6814	4192	4048	3856	3152	4104	3659	3658	3296	3183	2823	2897	8513	8499	9131	12259	4027	1895	3056	4655	4106	3549
TD11D	Track Dozer 11 (NPAG/OB - Komatsu D475)	Point	423578.9	5410271.7	360.0	4.0	364.0	5296	8022	8166	8035	7669	8193	7450	7264	6630	6201	5673	5100	3957	3934	5000	8048	3817	6174	6134	3332	3772	4256
TD11N	Track Dozer 11 (NPAG/OB - CAT D10)	Point	423578.9	5410651.3	360.0	4.0	364.0	4922	7923	8100	7979	7758	8358	7639	7467	6846	6431	5903	5354	3984	3948	4758	8201	4159	6297	6360	3702	4118	4566
TD12D	Track Dozer 12 (NPAG/OB - Komatsu D475)	Point	425044.7	5410651.3	360.0	4.0	364.0	4885	6509	6655	6527	6352	7081	6430	6300	5725	5368	4850	4413	5442	5410	5982	9550	3785	4952	5279	3683	3782	3948
TD12N	Track Dozer 11 (NPAG/OB - CAT D10)	Point	425044.7	5410766.2	360.0	4.0	364.0	4771	6476	6635	6511	6389	7143	6501	6376	5807	5455	4938	4509	5454	5419	5927	9592	3899	5004	5364	3795	3897	4058
TD13	Track Dozer 13 (NPAG/OB -CAT D9)	Point	423823.4	5409732.8	360.0	4.0	364.0	5798	7961	8052	7907	7332	7757	6986	6784	6137	5693	5167	4570	4224	4219	5545	8090	3226	5797	5633	2753	3181	3679
TD14	Track Dozer 14 (NPAG/OB -CAT D9)	Point	424194.3	5409598.4	357.0	4.0	361.0	5905	7666	7734	7583	6946	7363	6594	6394	5750	5310	4783	4196	4608	4605	5908	8404	2947	5406	5247	2571	2911	3350
TD15	Track Dozer 15 (NPAG/OB -CAT D9)	Point	425005.7	5410487.0	360.0	4.0	364.0	5043	6595	6725	6593	6340	7029	6361	6223	5639	5273	4751	4298	5392	5364	6031	9455	3624	4916	5186	3514	3620	3801
TD16	Track Dozer 16 (NPAG/OB -CAT D9)	Point	423780.9	5410394.7	360.0	4.0	364.0	5145	7794	7944	7816	7500	8063	7335	7158	6532	6114	5585	5031	4164	4137	5075	8282	3842	6020	6043	3411	3803	4241
TD17	Track Dozer 17 (TMA -CAT D9)	Point	423583.3	5411456.9	360.0	4.0	364.0	4130	7766	8014	7915	7999	8748	8082	7939	7345	6962	6436	5937	4162	4101	4313	8575	4900	6619	6880	4492	4866	5254
TD18	Track Dozer 18 (TMA -CAT D9)	Point	424156.5	5412149.7	365.8	4.0	369.8	3360	7128	7436	7357	7751	8668	8076	7972	7423	7088	6574	6153	4944	4871	4559	9421	5401	6485	6993	5121	5382	5648
TD19	Track Dozer 19 (TMA -CAT D9)	Point	424007.6	5411921.4	364.7	4.0	368.7	3602	7292	7580	7494	7785	8652	8037	7920	7358	7007	6489	6045	4718	4649	4497	9176	5214	6482	6917	4901	5191	5489
TD20	Track Dozer 20 (TMA -CAT D9)	Point	423481.7	5411920.3	366.7	4.0	370.7	3703	7817	8105	8019	8266	9084	8443	8312	7731	7361	6838	6359	4234	4159	4013	8728	5370	6931	7276	4966	5337	5711
TD21	Track Dozer 21 (TMA -CAT D9)	Point	423666.2	5411856.1	364.4	3.0	367.4	3723	7638	7921	7833	8071	8895	8258	8130	7553	7188	6665	6194	4378	4307	4207	8850	5248	6739	7101	4873	5219	5570
TD22	Track Dozer 22 (TMA -CAT D9)	Point	423193.8	5411886.1	364.8	3.0	367.8	3820	8106	8393	8306	8518	9306	8650	8511	7921	7540	7015	6516	3958	3881	3768	8469	5444	7164	7458	4991	5406	5819

Appendix D - Noise Sources & Calculations
Table D4: Summary of Sources and Distance to PORs

New sources added or modified as part of this updated AAR are higlighted in green.

SOURCE INFORMATION								DISTANCE TO PORs																							
AAR Source ID	Description	Source Type	X Coordinate	Y Coordinate	Grade Height (MASL)	Height of Source Above Grade	Source Elevation (MASL)	POR1	POR2	POR3	POR4	POR6	POR7	POR8	POR9	POR10	POR11	POR12	POR14	POR15	POR16	POR17	POR19	POR20	POR21	POR22	POR23	POR24	POR25
			m	m	m	m	m	m	m	m	m	m	m	m	m	m	m	m	m	m	m	m	m	m	m	m	m	m	m
TD23	Track Dozer 23 (TMA -CAT D9)	Point	422395.6	5411969.4	363.3	3.0	366.3	4077	8897	9192	9106	9291	10030	9348	9193	8586	8185	7657	7122	3301	3210	3030	7866	5875	7910	8109	5313	5825	6324
TD24	Track Dozer 24 (TMA -CAT D9)	Point	422167.4	5411848.6	362.7	3.0	365.7	4298	9133	9420	9331	9463	10167	9471	9308	8692	8282	7754	7203	3044	2953	2909	7612	5890	8063	8209	5291	5835	6366
TD25	Track Dozer 25 (TMA -CAT D9)	Point	421999.3	5411776.0	362.9	3.0	365.9	4449	9306	9588	9498	9598	10279	9574	9406	8785	8368	7840	7279	2864	2771	2822	7434	5921	8186	8297	5298	5864	6415
TD26	Track Dozer 26 (TMA -CAT D9)	Point	421886.0	5411753.9	363.4	3.0	366.4	4531	9421	9702	9611	9698	10369	9659	9488	8864	8444	7916	7350	2758	2664	2750	7332	5968	8281	8375	5330	5909	6472
TD27	Track Dozer 27 (TMA -CAT D9)	Point	421804.1	5411725.6	363.6	3.0	366.6	4600	9505	9784	9692	9767	10428	9714	9540	8915	8492	7964	7393	2674	2580	2709	7250	5992	8345	8424	5344	5932	6504
WD	Komatsu Wheel Dozer WD900	Point	425558.9	5409562.6	191.5	6.0	197.5	6040	6443	6455	6291	5591	6100	5382	5219	4613	4225	3699	3224	5968	5961	6998	9711	2696	4073	4143	2799	2711	2768
WL1	Komatsu Wheel Loader WA1200	Point	425417.9	5409658.6	180.0	6.0	186.0	5921	6526	6554	6394	5747	6269	5553	5390	4783	4393	3867	3385	5818	5810	6827	9598	2783	4236	4312	2831	2793	2892
WL2	CAT 994HL	Point	425433.9	5409625.3	180.0	4.0	184.0	5957	6526	6550	6389	5725	6240	5522	5357	4749	4358	3832	3348	5837	5830	6860	9605	2750	4211	4278	2806	2761	2856
WL3	CAT 980H Wheel Loader	Point	423523.3	5411508.4	360.0	4.0	364.0	4093	7819	8072	7974	8073	8826	8161	8017	7424	7040	6515	6015	4121	4058	4236	8548	4969	6696	6959	4553	4935	5328
WL4	CAT 980H Wheel Loader	Point	423388.4	5411905.1	365.9	4.0	369.9	3743	7911	8199	8112	8345	9153	8507	8373	7789	7415	6892	6405	4143	4068	3934	8642	5388	7004	7331	4968	5354	5741
WL5	CAT 980H Wheel Loader	Point	422960.0	5411960.6	366.4	4.0	370.4	3833	8334	8628	8542	8762	9543	8882	8740	8146	7760	7234	6727	3783	3701	3525	8317	5607	7405	7679	5123	5565	6003
WL6	CAT 980H Wheel Loader	Point	423531.3	5411433.0	360.0	4.0	364.0	4165	7821	8068	7968	8039	8780	8110	7965	7369	6983	6457	5953	4105	4044	4280	8518	4896	6655	6902	4477	4861	5258
WP01	Water Pump WP01	Point	425523.5	5409667.4	180.0	1.5	181.5	5931	6427	6451	6291	5644	6179	5469	5310	4707	4323	3799	3329	5923	5914	6909	9702	2797	4137	4241	2880	2811	2878
WP02	Water Pump WP02	Point	425585.4	5409665.7	189.4	1.5	190.9	5944	6373	6394	6233	5583	6123	5416	5259	4659	4278	3755	3293	5984	5976	6961	9762	2801	4078	4195	2904	2817	2864
WP03	Water Pump WP03	Point	425653.5	5409608.0	195.0	1.5	196.5	6014	6338	6350	6187	5506	6036	5327	5170	4570	4189	3666	3207	6057	6050	7050	9813	2751	3996	4106	2882	2770	2795
WP04	Water Pump WP04	Point	425649.9	5409592.5	195.0	1.5	196.5	6029	6349	6359	6196	5507	6032	5322	5163	4562	4181	3657	3196	6055	6048	7056	9806	2735	3995	4097	2866	2754	2781
WP05	Water Pump WP05	Point	425572.1	5409551.6	195.7	1.5	197.2	6054	6437	6446	6283	5577	6083	5365	5202	4595	4207	3682	3207	5982	5976	7015	9721	2686	4058	4126	2795	2702	2754
WP06	Water Pump WP06	Point	425673.6	5409551.7	342.7	1.5	344.2	6074	6347	6352	6187	5477	5992	5280	5120	4518	4135	3611	3149	6083	6077	7098	9819	2697	3960	4052	2841	2718	2737
WP07	Water Pump WP07	Point	425425.3	5409706.6	190.0	1.5	191.5	5875	6498	6530	6372	5748	6284	5572	5412	4807	4421	3896	3419	5821	5812	6806	9618	2831	4243	4339	2878	2841	2937
WP08	Water Pump WP08	Point	425396.1	5409698.1	192.2	1.5	193.7	5879	6528	6561	6403	5775	6306	5592	5431	4824	4436	3910	3429	5793	5784	6787	9587	2822	4268	4355	2859	2831	2936
WP09	Water Pump WP09	Point	425404.3	5409141.2	346.7	1.5	348.2	6430	6782	6758	6586	5693	6069	5307	5117	4484	4063	3534	2996	5874	5878	7126	9466	2266	4130	3992	2353	2276	2397
WP10	Water Pump WP10	Point	425960.0	5409059.1	355.7	1.5	357.2	5783	5117	5139	4981	4593	5368	4741	4607	4024	3669	3153	2758	5699	5689	6683	9476	2571	3234	3578	2663	2589	2531
WP11	Water Pump WP11	Point	426316.3	5409233.1	362.8	1.5	364.3	6095	4525	4376	4181	3318	4134	3620	3585	3170	3010	2615	2629	5827	5823	6923	9545	2571	1941	2886	2663	2589	2531
WP12	Water Pump WP12	Point	424065.2	5409081.9	349.1	1.5	350.6	6095	4189	4090	3908	3375	4359	3913	3909	3535	3406	2982	2757	5826	5822	6923	9544	2573	2149	3280	2663	2590	2533
WP13	Water Pump WP13	Point	424459.3	5409308.6	347.2	1.5	348.7	5063	6289	6271	6101	5306	5791	5071	4908	4304	3920	3396	2936	3874	3842	4761	8059	2447	3776	3837	2469	2458	2530
WP14	Water Pump WP14	Point	423065.9	5410311.5	358.4	1.5	359.9	4714	6289	6272	6102	5307	5791	5071	4909	4304	3920	3396	2937	4432	4400	5166	8591	2446	3776	3837	2468	2458	2530
WP15	Water Pump WP15	Point	423105.0	5410312.8	359.0	1.5	360.5	5783	5117	5139	4981	4593	5368	4741	4607	4024	3669	3153	2758	5699	5689	6683	9476	2571	3234	3578	2663	2589	2531
WP16	Water Pump WP16	Point	425369.5	5410194.5	329.3	1.5	330.8	6095	4525	4376	4181	3318	4134	3620	3585	3170	3010	2615	2629	5827	5823	6923	9545	2571	1941	2886	2663	2589	2531
WP17	Water Pump WP17	Point	424105.1	5410980.0	360.0	1.5	361.5	6095	4189	4090	3908	3375	4359	3913	3909	3535	3406	2982	2757	5826	5822	6923	9544	2573	2149	3280	2663	2590	2533
WP18	Water Pump WP18	Point	421921.5	5409452.6	345.0	1.5	346.5	5063	6289	6271	6101	5306	5791	5071	4908	4304	3920	3396	2936	3874	3842	4761	8059	2447	3776	3837	2469	2458	2530
WP19	Water Pump WP19	Point	426445.2	5410424.3	363.9	1.5	365.4	4714	6289	6272	6102	5307	5791	5071	4909	4304	3920	3396	2937	4432	4400	5166	8591	2446	3776	3837	2468	2458	2530
WS	Wet Scrubber	Point	426584.8	5410957.3	369.0	4.0	373.0	5783	5117	5139	4981	4593	5368	4741	4607	4024	3669	3153	2758	5699	5689	6683	9476	2571	3234	3578	2663	2589	2531
MGR_OPMill	Motor Grader Route Open Pit to Mill	Mvg Point	varies	varies	varies	4.0	varies	5783	5117	5139	4981	4593	5368	4741	4607	4024	3669	3153	2758	5699	5689	6683	9476	2571	3234	3578	2663	2589	2531
MGR_SP	Motor Grader Route Stockpile	Mvg Point	varies	varies	varies	4.0	varies	5783	5117	5139	4981	4593	5368	4741	4607	4024	3669	3153	2758	5699	5689	6683	9476	2571	3234	3578	2663	2589	2531
MGR_PAG	Motor Grader Route PAG	Mvg Point	varies	varies	varies	4.0	varies	6095	4189	4090	3908	3375	4359	3913	3909	3535	3406	2982	2757	5826	5822	6923	9544	2573	2149	3280	2663	2590	2533
MGR_NPAG	Motor Grader Route NPAG	Mvg Point	varies	varies	varies	4.0	varies	6095	4189	4090	3908	3375	4359	3913	3909	3535	3406	2982	2757	5826	5822	6923	9544	2573	2149	3280	2663	2590	2533
MGR_OB	Motor Grader Route OB	Mvg Point	varies	varies	varies	4.0	varies	6095	4189	4090	3908	3375	4359	3913	3909	3535	3406	2982	2757	5826	5822	6923	9544	2573	2149	3280	2663	2590	2533
TRE_OP-Mill	Truck Route Open Pit to Mill (Empty Truck)	Mvg Point	varies	varies	varies	4.0	varies	5783	5117	5139	4981	4593	5368	4741	4607	4024	3669	3153	2758	5699	5689	6683	9476	2571	3234	3578	2663	2589	2531
TRE_OP-LGO	Truck Route Open Pit to LGO (Empty Truck)	Mvg Point	varies	varies	varies	4.0	varies	6095	4525	4376	4181	3318	4134	3620	3585	3170	3010	2615	2629	5827	5823	6923	9545	2571	1941	2886	2663	2589	2531
TRE_OP-PAG	Truck Route Open Pit to PAG (Empty Truck)	Mvg Point	varies	varies	varies	4.0	varies	6095	4189	4090	3908	3375	4359	3913	3909	3535	3406	2982	2757	5826	5822	6923	9544	2573	2149	3280	2663	2590	2533
TRE_OP-NPAG	Truck Route Open Pit to NPAG (Empty Truck)	Mvg Point	varies	varies	varies	4.0	varies	5063	6289	6271	6101	5306	5791	5071	4908	4304	3920	3396	2936	3874	3842	4761	8059	2447	3776	3837	2469	2458	2530
TRE_OP-OB	Truck Route Open Pit to Overburden (Empty Truck)	Mvg Point	varies	varies	varies	4.0	varies	4714	6289	6272	6102	5307	5791	5071	4909	4304	3920	3396	2937	4432	4400	5166	8591	2446	3776	3837	2468	2458	2530
TRE_OP-TMA	Truck Route Open Pit to TMA Staging Area (Empty Truck)	Mvg Point	varies	varies	varies	4.0	varies	5783	5117	5139	4981	4593	5368	4741	4607	4024	3669	3153	2758	5699	5689	6683	9476	2571	3234	3578	2663	2589	2531
TRE_TMA1	Truck Route TMA Staging Area to TMA Dam (Empty Truck)	Mvg Point	varies	varies	varies	4.0	varies	5783	5117	5139	4981	4593	5368	4741	4607	4024	3669	3153	2758	5699	5689	6683	9476	2571	3234	3578	2663	2589	2531
TRE_TMA2	Truck Route TMA Staging Area to TMA Dam (Empty Truck)	Mvg Point	varies	varies	varies	4.0	varies	5783	5117	5139	4981	4593	5368	4741	4607	4024	3669	3153	2758	5699	5689	6683	9476	2571	3234	3578	2663	2589	2531
TRL_OP-Mill	Truck Route Open Pit to Mill (Loaded Truck)	Mvg Point	varies	varies	varies	4.0	varies	5783	5117	5139	4981	4593	5368	4741	4607	4024	3669	3153	2758	5699	5689	6683	9476	2571	3234	3578	2663	2589	2531
TRL_OP-LGO	Truck Route Open Pit to LGO (Loaded Truck)	Mvg Point	varies	varies	varies	4.0	varies	6095	4525	4376	4181	3318	4134	3620	3585	3170	3010	2615	2629	5827	5823	6923	9545	2571	1941	2886	2663	2589	2531
TRL_OP-PAG	Truck Route Open Pit to PAG (Loaded Truck)	Mvg Point	varies	varies	varies	4.0	varies	6095	4189	4090	3908	3375	4359	3913	3909	3535	3406	2982	2757	5826	5822	6923	9544	2573	2149	3280	2663	2590	2533
TRL_OP-NPAG	Truck Route Open Pit to NPAG (Loaded Truck)	Mvg Point	varies	varies	varies	4.0	varies	5063	6289	6271	6101	5306	5791	5071	4908	4304	3920	3396	2936	3874	3842	4761	8059	2447	3776	3837	2469	2458	2530
TRL_OP-OB	Truck Route Open Pit to Overburden (Loaded Truck)	Mvg Point	varies	varies	varies	4.0	varies	5783	5117	5139	4981	4593	5368	4741	4607	4024	3669	3153	2758	5699	5689	6683	9476	2571	3234	3578	2663	2589	2531
TRL_OP-TMA	Truck Route Open Pit to TMA Staging Area (Loaded Truck)	Mvg Point	varies	varies	varies	4.0	varies	5783	5117	5139	4981	4593	5368	4741	4607	4024	3669	3153	2758	5699	5689	6683	9476	2571	3234	3578	2663	2589	2531
TRL_TMA1	Truck Route TMA Staging Area to TMA Dam	Mvg Point	varies	varies	varies	4.0	varies	5783	5117	5139	4981	4593	5368	4741	4607	4024	3669	3153	2758	5699	5689	6683	9476	2571	3234	3578	2663	2589	2531
TRL_TMA2	Truck Route TMA Staging Area to TMA Dam	Mvg Point	varies	varies	varies	4.0	varies	5783	5117	5139	4981	4593	5368	4741	4607	4024	3669	3153	2758	5699	5689	6683	9476	2571	3234	3578	2663	2589	2531
WTR_OPMill	Water Truck Route Open Pit to Mill	Mvg Point	varies	varies	varies	4.0	varies	5783	5117	5139	4981	4593	5368	4741	4607	4024	3669	3153	2758	5699	5689	6683	9476	2571	3234	3578	2663	2589	2531
WTR_SP	Water Truck Route Stockpile	Mvg Point	varies	varies	varies	4.0	varies	5783	5117	5139	4981	4593	5368	4741	4607	4024	3669	3153	2758	5699	5689	6683	9476	2571	3234	3578	2663	2589	2531
WTR_PAG	Water Truck Route PAG	Mvg Point	varies	varies	varies	4.0	varies	6095	4189	4090	3908	3375	4359	3913	3909	3535	3406	2982	2757	5826	5822	6923	9544	2573	2149	3280	2663	2590	2533
WTR_NPAG	Water Truck Route NPAG	Mvg Point	varies	varies	varies	4.0	varies	6095	4189	4090	3908	3375	4359	3913	3909	3535	3406	2982	2757	5826	5822	6923	9544	2573	2149	3280	2663	2590	2533
WTR_OB	Water Truck Route OB	Mvg Point	varies	varies	varies	4.0	varies	6095	4189	4090	3908	3375	4359	3913	3909	3535	3406	2982	2757	5826	5822	6923	9544	2573	2149	3280	2663	2590	2533
EG1	Emergency Generator 1 (CAT 2.5 MW)	Point	426709.0	5411190.1	369.8	4.5	varies	4870	4760	4925	4808	5048	6111	5637	5602	5160	4942	4489	4302	7158	7118	7284	11297	4530	3901	4826	4775	4568	4381
EG2	Emergency Generator 2 (CAT 2.5 MW)	Point	426802.0	5411035.8	375.0	3.0	varies	5050	4718	4857	4733	4891	5936	5458	5422	4980	4764	4313	4135	7230	7193	7423	11331	4413	3727	4648	4689	4455	4243
FP1	Fire Pump 1	Point	426800.5	5411020.4	375.0	3.0	378.0	5063	4724	4861	4737	4885	5927	5447	5410	4967	4750	4299	4120	7227	7190	7427	11324	4398	3717	4634	4675	4440	4227

APPENDIX E. ACOUSTIC MODEL INPUTS AND OUTPUTS

Configuration	
Parameter	Value
General	
Country	(user defined)
Max. Error (dB)	0.00
Max. Search Radius (m)	16000.00
Min. Dist Src to Rcvr	0.00
Partition	
Raster Factor	0.50
Max. Length of Section (m)	1000.00
Min. Length of Section (m)	1.00
Min. Length of Section (%)	0.00
Proj. Line Sources	On
Proj. Area Sources	On
Ref. Time	
Reference Time Day (min)	960.00
Reference Time Night (min)	480.00
Daytime Penalty (dB)	0.00
Recr. Time Penalty (dB)	0.00
Night-time Penalty (dB)	0.00
DTM	
Standard Height (m)	0.00
Model of Terrain	Triangulation
Reflection	
max. Order of Reflection	2
Search Radius Src	16000.00
Search Radius Rcvr	16000.00
Max. Distance Source - Rcvr	16000.00 16000.00
Min. Distance Rvcr - Reflector	1.00 1.00
Min. Distance Source - Reflector	0.10
Industrial (ISO 9613)	
Lateral Diffraction	some Obj
Obst. within Area Src do not shield	Off
Screening	Excl. Ground Att. over Barrier
	Dz with limit (20/25)
Barrier Coefficients C1,2,3	3.0 20.0 0.0
Temperature (°C)	10
rel. Humidity (%)	70
Ground Absorption G	1.00
Wind Speed for Dir. (m/s)	3.0
Roads (RLS-90)	
Strictly acc. to RLS-90	
Railways (Schall 03 (1990))	
Strictly acc. to Schall 03 / Schall-Transrapid	
Aircraft (???)	
Strictly acc. to AzB	

Receiver
Name: POR14
ID:
X: 427450.00
Y: 5406952.00
Z: 364.50

Point Source, ISO 9613, Name: "E4", ID: ""																					
Nr.	X	Y	Z	Refl.	DEN	Freq.	Lw	l/a	Optime	K0	Dc	Adiv	Aatm	Agr	Afol	Ahous	Abar	Cmet	RL	Lr
	(m)	(m)	(m)			(Hz)	dB(A)	dB	dB	(dB)	(dB)	(dB)	(dB)	(dB)	(dB)	(dB)	(dB)	(dB)	(dB)	dB(A)
1	425597.70	5409592.51	184.00	0	DEN	32	80.7	0.0	0.0	0.0	0.0	81.2	0.1	-5.8	0.0	0.0	17.8	0.0	0.0	-12.6
1	425597.70	5409592.51	184.00	0	DEN	63	96.8	0.0	0.0	0.0	0.0	81.2	0.4	-5.8	0.0	0.0	20.0	0.0	0.0	1.0
1	425597.70	5409592.51	184.00	0	DEN	125	115.1	0.0	0.0	0.0	0.0	81.2	1.3	2.0	0.0	0.0	18.0	0.0	0.0	12.6
1	425597.70	5409592.51	184.00	0	DEN	250	117.0	0.0	0.0	0.0	0.0	81.2	3.4	-0.4	0.0	0.0	20.0	0.0	0.0	12.9
1	425597.70	5409592.51	184.00	0	DEN	500	118.8	0.0	0.0	0.0	0.0	81.2	6.2	-1.8	0.0	0.0	20.0	0.0	0.0	13.2
1	425597.70	5409592.51	184.00	0	DEN	1000	119.8	0.0	0.0	0.0	0.0	81.2	11.8	-1.8	0.0	0.0	20.0	0.0	0.0	8.6
1	425597.70	5409592.51	184.00	0	DEN	2000	115.2	0.0	0.0	0.0	0.0	81.2	31.2	-1.8	0.0	0.0	20.0	0.0	0.0	-15.4
1	425597.70	5409592.51	184.00	0	DEN	4000	109.5	0.0	0.0	0.0	0.0	81.2	105.9	-1.8	0.0	0.0	20.0	0.0	0.0	-95.7
1	425597.70	5409592.51	184.00	0	DEN	8000	101.3	0.0	0.0	0.0	0.0	81.2	377.6	-1.8	0.0	0.0	20.0	0.0	0.0	-375.6

Point Source, ISO 9613, Name: "TD01", ID: ""																					
Nr.	X	Y	Z	Refl.	DEN	Freq.	Lw	l/a	Optime	K0	Dc	Adiv	Aatm	Agr	Afol	Ahous	Abar	Cmet	RL	Lr
	(m)	(m)	(m)			(Hz)	dB(A)	dB	dB	(dB)	(dB)	(dB)	(dB)	(dB)	(dB)	(dB)	(dB)	(dB)	(dB)	dB(A)
2	425616.05	5409573.45	196.03	0	DEN	32	76.1	0.0	0.0	0.0	0.0	81.1	0.1	-5.8	0.0	0.0	18.4	0.0	0.0	-17.8
2	425616.05	5409573.45	196.03	0	DEN	63	89.7	0.0	0.0	0.0	0.0	81.1	0.4	-5.8	0.0	0.0	20.0	0.0	0.0	-6.0
2	425616.05	5409573.45	196.03	0	DEN	125	103.2	0.0	0.0	0.0	0.0	81.1	1.3	2.0	0.0	0.0	18.0	0.0	0.0	0.8
2	425616.05	5409573.45	196.03	0	DEN	250	109.5	0.0	0.0	0.0	0.0	81.1	3.3	-0.4	0.0	0.0	20.0	0.0	0.0	5.5
2	425616.05	5409573.45	196.03	0	DEN	500	117.4	0.0	0.0	0.0	0.0	81.1	6.2	-1.8	0.0	0.0	20.0	0.0	0.0	11.9
2	425616.05	5409573.45	196.03	0	DEN	1000	114.9	0.0	0.0	0.0	0.0	81.1	11.7	-1.8	0.0	0.0	20.0	0.0	0.0	3.9
2	425616.05	5409573.45	196.03	0	DEN	2000	113.8	0.0	0.0	0.0	0.0	81.1	31.0	-1.8	0.0	0.0	20.0	0.0	0.0	-16.5
2	425616.05	5409573.45	196.03	0	DEN	4000	111.7	0.0	0.0	0.0	0.0	81.1	105.0	-1.8	0.0	0.0	20.0	0.0	0.0	-92.6
2	425616.05	5409573.45	196.03	0	DEN	8000	104.1	0.0	0.0	0.0	0.0	81.1	374.5	-1.8	0.0	0.0	20.0	0.0	0.0	-369.7

Point Source, ISO 9613, Name: "E3", ID: ""																					
Nr.	X	Y	Z	Refl.	DEN	Freq.	Lw	l/a	Optime	K0	Dc	Adiv	Aatm	Agr	Afol	Ahous	Abar	Cmet	RL	Lr
	(m)	(m)	(m)			(Hz)	dB(A)	dB	dB	(dB)	(dB)	(dB)	(dB)	(dB)	(dB)	(dB)	(dB)	(dB)	(dB)	dB(A)
3	425503.23	5409575.74	196.51	0	DEN	32	78.3	0.0	0.0	0.0	0.0	81.3	0.1	-5.8	0.0	0.0	19.0	0.0	0.0	-16.3
3	425503.23	5409575.74	196.51	0	DEN	63	100.3	0.0	0.0	0.0	0.0	81.3	0.4	-5.8	0.0	0.0	20.0	0.0	0.0	4.4
3	425503.23	5409575.74	196.51	0	DEN	125	105.4	0.0	0.0	0.0	0.0	81.3	1.3	2.0	0.0	0.0	18.0	0.0	0.0	2.8
3	425503.23	5409575.74	196.51	0	DEN	250	113.5	0.0	0.0	0.0	0.0	81.3	3.4	-0.4	0.0	0.0	20.0	0.0	0.0	9.2
3	425503.23	5409575.74	196.51	0	DEN	500	117.1	0.0	0.0	0.0	0.0	81.3	6.3	-1.8	0.0	0.0	20.0	0.0	0.0	11.3
3	425503.23	5409575.74	196.51	0	DEN	1000	114.8	0.0	0.0	0.0	0.0	81.3	12.0	-1.8	0.0	0.0	20.0	0.0	0.0	3.4
3	425503.23	5409575.74	196.51	0	DEN	2000	112.6	0.0	0.0	0.0	0.0	81.3	31.6	-1.8	0.0	0.0	20.0	0.0	0.0	-18.5
3	425503.23	5409575.74	196.51	0	DEN	4000	104.3	0.0	0.0	0.0	0.0	81.3	107.2	-1.8	0.0	0.0	20.0	0.0	0.0	-102.4
3	425503.23	5409575.74	196.51	0	DEN	8000	94.0	0.0	0.0	0.0	0.0	81.3	382.4	-1.8	0.0	0.0	20.0	0.0	0.0	-387.8

Point Source, ISO 9613, Name: "TD03", ID: ""																					
Nr.	X	Y	Z	Refl.	DEN	Freq.	Lw	l/a	Optime	K0	Dc	Adiv	Aatm	Agr	Afol	Ahous	Abar	Cmet	RL	Lr
	(m)	(m)	(m)			(Hz)	dB(A)	dB	dB	(dB)	(dB)	(dB)	(dB)	(dB)	(dB)	(dB)	(dB)	(dB)	(dB)	dB(A)
4	425498.19	5409623.43	184.00	0	DEN	32	73.0	0.0	0.0	0.0	0.0	81.4	0.1	-5.8	0.0	0.0	16.4	0.0	0.0	-19.2
4	425498.19	5409623.43	184.00	0	DEN	63	89.6	0.0	0.0	0.0	0.0	81.4	0.4	-5.8	0.0	0.0	19.3	0.0	0.0	-5.7
4	425498.19	5409623.43	184.00	0	DEN	125	103.8	0.0	0.0	0.0	0.0	81.4	1.4	2.0	0.0	0.0	18.0	0.0	0.0	1.0
4	425498.19	5409623.43	184.00	0	DEN	250	110.0	0.0	0.0	0.0	0.0	81.4	3.5	-0.5	0.0	0.0	20.0	0.0	0.0	5.6
4	425498.19	5409623.43	184.00	0	DEN	500	115.2	0.0	0.0	0.0	0.0	81.4	6.4	-1.9	0.0	0.0	20.0	0.0	0.0	9.3
4	425498.19	5409623.43	184.00	0	DEN	1000	115.4	0.0	0.0	0.0	0.0	81.4	12.1	-1.9	0.0	0.0	20.0	0.0	0.0	3.7
4	425498.19	5409623.43	184.00	0	DEN	2000	113.3	0.0	0.0	0.0	0.0	81.4	32.0	-1.9	0.0	0.0	20.0	0.0	0.0	-18.3
4	425498.19	5409623.43	184.00	0	DEN	4000	104.9	0.0	0.0	0.0	0.0	81.4	108.6	-1.9	0.0	0.0	20.0	0.0	0.0	-103.2
4	425498.19	5409623.43	184.00	0	DEN	8000	96.3	0.0	0.0	0.0	0.0	81.4	387.3	-1.9	0.0	0.0	20.0	0.0	0.0	-390.5

Point Source, ISO 9613, Name: "TD02", ID: ""																					
Nr.	X	Y	Z	Refl.	DEN	Freq.	Lw	l/a	Optime	K0	Dc	Adiv	Aatm	Agr	Afol	Ahous	Abar	Cmet	RL	Lr
	(m)	(m)	(m)			(Hz)	dB(A)	dB	dB	(dB)	(dB)	(dB)	(dB)	(dB)	(dB)	(dB)	(dB)	(dB)	(dB)	dB(A)
5	425399.17	5409661.78	191.84	0	DEN	32	73.0	0.0	0.0	0.0	0.0	81.6	0.1	-5.8	0.0	0.0	15.2	0.0	0.0	-18.2

Point Source, ISO 9613, Name: "TD02", ID: ""																				
Nr.	X	Y	Z	Refl.	DEN	Freq.	Lw	l/a	Optime	K0	Dc	Adiv	Aatm	Agr	Afol	Ahous	Abar	Cmet	RL	Lr
	(m)	(m)	(m)			(Hz)	dB(A)	dB	dB	(dB)	(dB)	(dB)	(dB)	(dB)	(dB)	(dB)	(dB)	(dB)	(dB)	dB(A)
5	425399.17	5409661.78	191.84	0	DEN	63	89.6	0.0	0.0	0.0	0.0	81.6	0.4	-5.8	0.0	0.0	18.0	0.0	0.0	-4.7
5	425399.17	5409661.78	191.84	0	DEN	125	103.8	0.0	0.0	0.0	0.0	81.6	1.4	1.9	0.0	0.0	18.1	0.0	0.0	0.8
5	425399.17	5409661.78	191.84	0	DEN	250	110.0	0.0	0.0	0.0	0.0	81.6	3.6	-0.5	0.0	0.0	20.0	0.0	0.0	5.3
5	425399.17	5409661.78	191.84	0	DEN	500	115.2	0.0	0.0	0.0	0.0	81.6	6.6	-1.9	0.0	0.0	20.0	0.0	0.0	8.9
5	425399.17	5409661.78	191.84	0	DEN	1000	115.4	0.0	0.0	0.0	0.0	81.6	12.4	-1.9	0.0	0.0	20.0	0.0	0.0	3.2
5	425399.17	5409661.78	191.84	0	DEN	2000	113.3	0.0	0.0	0.0	0.0	81.6	32.9	-1.9	0.0	0.0	20.0	0.0	0.0	-19.3
5	425399.17	5409661.78	191.84	0	DEN	4000	104.9	0.0	0.0	0.0	0.0	81.6	111.5	-1.9	0.0	0.0	20.0	0.0	0.0	-106.3
5	425399.17	5409661.78	191.84	0	DEN	8000	96.3	0.0	0.0	0.0	0.0	81.6	397.7	-1.9	0.0	0.0	20.0	0.0	0.0	-401.1

Point Source, ISO 9613, Name: "EO_GENSET", ID: ""																				
Nr.	X	Y	Z	Refl.	DEN	Freq.	Lw	l/a	Optime	K0	Dc	Adiv	Aatm	Agr	Afol	Ahous	Abar	Cmet	RL	Lr
	(m)	(m)	(m)			(Hz)	dB(A)	dB	dB	(dB)	(dB)	(dB)	(dB)	(dB)	(dB)	(dB)	(dB)	(dB)	(dB)	dB(A)
6	427746.79	5409532.48	390.00	0	D	32	70.6	0.0	0.0	0.0	0.0	79.3	0.1	-5.7	0.0	0.0	0.0	0.0	0.0	-3.0
6	427746.79	5409532.48	390.00	0	D	63	91.5	0.0	0.0	0.0	0.0	79.3	0.3	-5.7	0.0	0.0	0.0	0.0	0.0	17.6
6	427746.79	5409532.48	390.00	0	D	125	106.7	0.0	0.0	0.0	0.0	79.3	1.1	2.0	0.0	0.0	0.0	0.0	0.0	24.4
6	427746.79	5409532.48	390.00	0	D	250	111.3	0.0	0.0	0.0	0.0	79.3	2.7	-0.5	0.0	0.0	0.0	0.0	0.0	29.8
6	427746.79	5409532.48	390.00	0	D	500	118.7	0.0	0.0	0.0	0.0	79.3	5.0	-1.9	0.0	0.0	0.0	0.0	0.0	36.3
6	427746.79	5409532.48	390.00	0	D	1000	119.1	0.0	0.0	0.0	0.0	79.3	9.5	-1.9	0.0	0.0	0.0	0.0	0.0	32.2
6	427746.79	5409532.48	390.00	0	D	2000	117.6	0.0	0.0	0.0	0.0	79.3	25.1	-1.9	0.0	0.0	0.0	0.0	0.0	15.1
6	427746.79	5409532.48	390.00	0	D	4000	111.0	0.0	0.0	0.0	0.0	79.3	85.1	-1.9	0.0	0.0	0.0	0.0	0.0	-51.5
6	427746.79	5409532.48	390.00	0	D	8000	83.5	0.0	0.0	0.0	0.0	79.3	303.6	-1.9	0.0	0.0	0.0	0.0	0.0	-297.5
6	427746.79	5409532.48	390.00	0	N	32	70.6	0.0	-188.0	0.0	0.0	79.3	0.1	-5.7	0.0	0.0	0.0	0.0	0.0	-191.0
6	427746.79	5409532.48	390.00	0	N	63	91.5	0.0	-188.0	0.0	0.0	79.3	0.3	-5.7	0.0	0.0	0.0	0.0	0.0	-170.4
6	427746.79	5409532.48	390.00	0	N	125	106.7	0.0	-188.0	0.0	0.0	79.3	1.1	2.0	0.0	0.0	0.0	0.0	0.0	-163.6
6	427746.79	5409532.48	390.00	0	N	250	111.3	0.0	-188.0	0.0	0.0	79.3	2.7	-0.5	0.0	0.0	0.0	0.0	0.0	-158.2
6	427746.79	5409532.48	390.00	0	N	500	118.7	0.0	-188.0	0.0	0.0	79.3	5.0	-1.9	0.0	0.0	0.0	0.0	0.0	-151.7
6	427746.79	5409532.48	390.00	0	N	1000	119.1	0.0	-188.0	0.0	0.0	79.3	9.5	-1.9	0.0	0.0	0.0	0.0	0.0	-155.8
6	427746.79	5409532.48	390.00	0	N	2000	117.6	0.0	-188.0	0.0	0.0	79.3	25.1	-1.9	0.0	0.0	0.0	0.0	0.0	-172.9
6	427746.79	5409532.48	390.00	0	N	4000	111.0	0.0	-188.0	0.0	0.0	79.3	85.1	-1.9	0.0	0.0	0.0	0.0	0.0	-239.5
6	427746.79	5409532.48	390.00	0	N	8000	83.5	0.0	-188.0	0.0	0.0	79.3	303.6	-1.9	0.0	0.0	0.0	0.0	0.0	-485.5
6	427746.79	5409532.48	390.00	0	E	32	70.6	0.0	-188.0	0.0	0.0	79.3	0.1	-5.7	0.0	0.0	0.0	0.0	0.0	-191.0
6	427746.79	5409532.48	390.00	0	E	63	91.5	0.0	-188.0	0.0	0.0	79.3	0.3	-5.7	0.0	0.0	0.0	0.0	0.0	-170.4
6	427746.79	5409532.48	390.00	0	E	125	106.7	0.0	-188.0	0.0	0.0	79.3	1.1	2.0	0.0	0.0	0.0	0.0	0.0	-163.6
6	427746.79	5409532.48	390.00	0	E	250	111.3	0.0	-188.0	0.0	0.0	79.3	2.7	-0.5	0.0	0.0	0.0	0.0	0.0	-158.2
6	427746.79	5409532.48	390.00	0	E	500	118.7	0.0	-188.0	0.0	0.0	79.3	5.0	-1.9	0.0	0.0	0.0	0.0	0.0	-151.7
6	427746.79	5409532.48	390.00	0	E	1000	119.1	0.0	-188.0	0.0	0.0	79.3	9.5	-1.9	0.0	0.0	0.0	0.0	0.0	-155.8
6	427746.79	5409532.48	390.00	0	E	2000	117.6	0.0	-188.0	0.0	0.0	79.3	25.1	-1.9	0.0	0.0	0.0	0.0	0.0	-172.9
6	427746.79	5409532.48	390.00	0	E	4000	111.0	0.0	-188.0	0.0	0.0	79.3	85.1	-1.9	0.0	0.0	0.0	0.0	0.0	-239.5
6	427746.79	5409532.48	390.00	0	E	8000	83.5	0.0	-188.0	0.0	0.0	79.3	303.6	-1.9	0.0	0.0	0.0	0.0	0.0	-485.5

Point Source, ISO 9613, Name: "RD1", ID: ""																				
Nr.	X	Y	Z	Refl.	DEN	Freq.	Lw	l/a	Optime	K0	Dc	Adiv	Aatm	Agr	Afol	Ahous	Abar	Cmet	RL	Lr
	(m)	(m)	(m)			(Hz)	dB(A)	dB	dB	(dB)	(dB)	(dB)	(dB)	(dB)	(dB)	(dB)	(dB)	(dB)	(dB)	dB(A)
7	425632.77	5409589.08	199.00	0	DEN	32	75.8	0.0	0.0	0.0	0.0	81.1	0.1	-5.8	0.0	0.0	17.7	0.0	0.0	-17.4
7	425632.77	5409589.08	199.00	0	DEN	63	99.8	0.0	0.0	0.0	0.0	81.1	0.4	-5.8	0.0	0.0	20.0	0.0	0.0	4.0
7	425632.77	5409589.08	199.00	0	DEN	125	102.6	0.0	0.0	0.0	0.0	81.1	1.3	2.0	0.0	0.0	18.0	0.0	0.0	0.2
7	425632.77	5409589.08	199.00	0	DEN	250	100.5	0.0	0.0	0.0	0.0	81.1	3.3	-0.4	0.0	0.0	20.0	0.0	0.0	-3.5
7	425632.77	5409589.08	199.00	0	DEN	500	110.1	0.0	0.0	0.0	0.0	81.1	6.2	-1.8	0.0	0.0	20.0	0.0	0.0	4.6
7	425632.77	5409589.08	199.00	0	DEN	1000	114.5	0.0	0.0	0.0	0.0	81.1	11.7	-1.8	0.0	0.0	20.0	0.0	0.0	3.5
7	425632.77	5409589.08	199.00	0	DEN	2000	114.9	0.0	0.0	0.0	0.0	81.1	31.0	-1.8	0.0	0.0	20.0	0.0	0.0	-15.4
7	425632.77	5409589.08	199.00	0	DEN	4000	110.5	0.0	0.0	0.0	0.0	81.1	105.1	-1.8	0.0	0.0	20.0	0.0	0.0	-93.9
7	425632.77	5409589.08	199.00	0	DEN	8000	105.2	0.0	0.0	0.0	0.0	81.1	374.8	-1.8	0.0	0.0	20.0	0.0	0.0	-368.9

Point Source, ISO 9613, Name: "RD2", ID: ""																				
Nr.	X	Y	Z	Refl.	DEN	Freq.	Lw	l/a	Optime	K0	Dc	Adiv	Aatm	Agr	Afol	Ahous	Abar	Cmet	RL	Lr
	(m)	(m)	(m)			(Hz)	dB(A)	dB	dB	(dB)	(dB)	(dB)	(dB)	(dB)	(dB)	(dB)	(dB)	(dB)	(dB)	dB(A)
8	425598.82	5409569.93	190.67	0	DEN	32	75.8	0.0	0.0	0.0	0.0	81.1	0.1	-5.8	0.0	0.0	18.6	0.0	0.0	-18.3
8	425598.82	5409569.93	190.67	0	DEN	63	99.8	0.0	0.0	0.0	0.0	81.1	0.4	-5.8	0.0	0.0	20.0	0.0	0.0	4.0
8	425598.82	5409569.93	190.67	0	DEN	125	102.6	0.0	0.0	0.0	0.0	81.1	1.3	2.0	0.0	0.0	18.0	0.0	0.0	0.1
8	425598.82	5409569.93	190.67	0	DEN	250	100.5	0.0	0.0	0.0	0.0	81.1	3.4	-0.4	0.0	0.0	20.0	0.0	0.0	-3.6
8	425598.82	5409569.93	190.67	0	DEN	500	110.1	0.0	0.0	0.0	0.0	81.1	6.2	-1.8	0.0	0.0	20.0	0.0	0.0	4.6
8	425598.82	5409569.93	190.67	0	DEN	1000	114.5	0.0	0.0	0.0	0.0	81.1	11.7	-1.8	0.0	0.0	20.0	0.0	0.0	3.4
8	425598.82	5409569.93	190.67	0	DEN	2000	114.9	0.0	0.0	0.0	0.0	81.1	31.0	-1.8	0.0	0.0	20.0	0.0	0.0	-15.5

Point Source, ISO 9613, Name: "RD2", ID: ""																				
Nr.	X	Y	Z	Refl.	DEN	Freq.	Lw	l/a	Optime	K0	Dc	Adiv	Aatm	Agr	Afol	Ahous	Abar	Cmet	RL	Lr
	(m)	(m)	(m)			(Hz)	dB(A)	dB	dB	(dB)	(dB)	(dB)	(dB)	(dB)	(dB)	(dB)	(dB)	(dB)	(dB)	dB(A)
8	425598.82	5409569.93	190.67	0	DEN	4000	110.5	0.0	0.0	0.0	0.0	81.1	105.2	-1.8	0.0	0.0	20.0	0.0	0.0	-94.1
8	425598.82	5409569.93	190.67	0	DEN	8000	105.2	0.0	0.0	0.0	0.0	81.1	375.3	-1.8	0.0	0.0	20.0	0.0	0.0	-369.4

Point Source, ISO 9613, Name: "RD3", ID: ""																				
Nr.	X	Y	Z	Refl.	DEN	Freq.	Lw	l/a	Optime	K0	Dc	Adiv	Aatm	Agr	Afol	Ahous	Abar	Cmet	RL	Lr
	(m)	(m)	(m)			(Hz)	dB(A)	dB	dB	(dB)	(dB)	(dB)	(dB)	(dB)	(dB)	(dB)	(dB)	(dB)	(dB)	dB(A)
9	425665.94	5409629.37	293.73	0	DEN	32	75.8	0.0	0.0	0.0	0.0	81.2	0.1	-5.8	0.0	0.0	9.5	0.0	0.0	-9.1
9	425665.94	5409629.37	293.73	0	DEN	63	99.8	0.0	0.0	0.0	0.0	81.2	0.4	-5.8	0.0	0.0	11.7	0.0	0.0	12.4
9	425665.94	5409629.37	293.73	0	DEN	125	102.6	0.0	0.0	0.0	0.0	81.2	1.3	1.9	0.0	0.0	12.3	0.0	0.0	5.9
9	425665.94	5409629.37	293.73	0	DEN	250	100.5	0.0	0.0	0.0	0.0	81.2	3.4	-0.5	0.0	0.0	17.0	0.0	0.0	-0.5
9	425665.94	5409629.37	293.73	0	DEN	500	110.1	0.0	0.0	0.0	0.0	81.2	6.2	-1.9	0.0	0.0	19.8	0.0	0.0	4.8
9	425665.94	5409629.37	293.73	0	DEN	1000	114.5	0.0	0.0	0.0	0.0	81.2	11.8	-1.9	0.0	0.0	20.0	0.0	0.0	3.5
9	425665.94	5409629.37	293.73	0	DEN	2000	114.9	0.0	0.0	0.0	0.0	81.2	31.1	-1.9	0.0	0.0	20.0	0.0	0.0	-15.5
9	425665.94	5409629.37	293.73	0	DEN	4000	110.5	0.0	0.0	0.0	0.0	81.2	105.5	-1.9	0.0	0.0	20.0	0.0	0.0	-94.2
9	425665.94	5409629.37	293.73	0	DEN	8000	105.2	0.0	0.0	0.0	0.0	81.2	376.1	-1.9	0.0	0.0	20.0	0.0	0.0	-370.2

Point Source, ISO 9613, Name: "MBPA_PC", ID: ""																				
Nr.	X	Y	Z	Refl.	DEN	Freq.	Lw	l/a	Optime	K0	Dc	Adiv	Aatm	Agr	Afol	Ahous	Abar	Cmet	RL	Lr
	(m)	(m)	(m)			(Hz)	dB(A)	dB	dB	(dB)	(dB)	(dB)	(dB)	(dB)	(dB)	(dB)	(dB)	(dB)	(dB)	dB(A)
10	426752.44	5410208.81	396.00	0	DEN	32	75.2	0.0	0.0	0.0	0.0	81.5	0.1	-5.8	0.0	0.0	0.0	0.0	0.0	-0.6
10	426752.44	5410208.81	396.00	0	DEN	63	94.4	0.0	0.0	0.0	0.0	81.5	0.4	-5.8	0.0	0.0	0.0	0.0	0.0	18.3
10	426752.44	5410208.81	396.00	0	DEN	125	101.2	0.0	0.0	0.0	0.0	81.5	1.4	1.3	0.0	0.0	0.0	0.0	0.0	17.1
10	426752.44	5410208.81	396.00	0	DEN	250	109.8	0.0	0.0	0.0	0.0	81.5	3.5	-1.1	0.0	0.0	0.0	0.0	0.0	26.0
10	426752.44	5410208.81	396.00	0	DEN	500	113.7	0.0	0.0	0.0	0.0	81.5	6.4	-2.5	0.0	0.0	0.0	0.0	0.0	28.3
10	426752.44	5410208.81	396.00	0	DEN	1000	113.8	0.0	0.0	0.0	0.0	81.5	12.2	-2.5	0.0	0.0	0.0	0.0	0.0	22.7
10	426752.44	5410208.81	396.00	0	DEN	2000	112.1	0.0	0.0	0.0	0.0	81.5	32.2	-2.5	0.0	0.0	0.0	0.0	0.0	1.0
10	426752.44	5410208.81	396.00	0	DEN	4000	107.3	0.0	0.0	0.0	0.0	81.5	109.2	-2.5	0.0	0.0	0.0	0.0	0.0	-80.8
10	426752.44	5410208.81	396.00	0	DEN	8000	98.4	0.0	0.0	0.0	0.0	81.5	389.3	-2.5	0.0	0.0	0.0	0.0	0.0	-369.8

Point Source, ISO 9613, Name: "MBPA_GENSET", ID: ""																				
Nr.	X	Y	Z	Refl.	DEN	Freq.	Lw	l/a	Optime	K0	Dc	Adiv	Aatm	Agr	Afol	Ahous	Abar	Cmet	RL	Lr
	(m)	(m)	(m)			(Hz)	dB(A)	dB	dB	(dB)	(dB)	(dB)	(dB)	(dB)	(dB)	(dB)	(dB)	(dB)	(dB)	dB(A)
11	426732.20	5410208.99	396.00	0	DEN	63	83.1	0.0	0.0	0.0	0.0	81.5	0.4	-5.8	0.0	0.0	0.0	0.0	0.0	7.0
11	426732.20	5410208.99	396.00	0	DEN	125	94.5	0.0	0.0	0.0	0.0	81.5	1.4	1.4	0.0	0.0	0.0	0.0	0.0	10.2
11	426732.20	5410208.99	396.00	0	DEN	250	106.3	0.0	0.0	0.0	0.0	81.5	3.5	-1.0	0.0	0.0	0.0	0.0	0.0	22.4
11	426732.20	5410208.99	396.00	0	DEN	500	108.8	0.0	0.0	0.0	0.0	81.5	6.4	-2.5	0.0	0.0	0.0	0.0	0.0	23.4
11	426732.20	5410208.99	396.00	0	DEN	1000	111.8	0.0	0.0	0.0	0.0	81.5	12.2	-2.5	0.0	0.0	0.0	0.0	0.0	20.6
11	426732.20	5410208.99	396.00	0	DEN	2000	112.3	0.0	0.0	0.0	0.0	81.5	32.2	-2.5	0.0	0.0	0.0	0.0	0.0	1.1
11	426732.20	5410208.99	396.00	0	DEN	4000	109.5	0.0	0.0	0.0	0.0	81.5	109.3	-2.5	0.0	0.0	0.0	0.0	0.0	-78.8
11	426732.20	5410208.99	396.00	0	DEN	8000	112.1	0.0	0.0	0.0	0.0	81.5	389.8	-2.5	0.0	0.0	0.0	0.0	0.0	-356.7

Point Source, ISO 9613, Name: "EO_SCNR", ID: ""																				
Nr.	X	Y	Z	Refl.	DEN	Freq.	Lw	l/a	Optime	K0	Dc	Adiv	Aatm	Agr	Afol	Ahous	Abar	Cmet	RL	Lr
	(m)	(m)	(m)			(Hz)	dB(A)	dB	dB	(dB)	(dB)	(dB)	(dB)	(dB)	(dB)	(dB)	(dB)	(dB)	(dB)	dB(A)
12	427738.40	5409531.90	390.00	0	D	32	73.5	0.0	0.0	0.0	0.0	79.3	0.1	-5.7	0.0	0.0	0.0	0.0	0.0	-0.1
12	427738.40	5409531.90	390.00	0	D	63	92.5	0.0	0.0	0.0	0.0	79.3	0.3	-5.7	0.0	0.0	0.0	0.0	0.0	18.6
12	427738.40	5409531.90	390.00	0	D	125	101.3	0.0	0.0	0.0	0.0	79.3	1.1	1.8	0.0	0.0	0.0	0.0	0.0	19.1
12	427738.40	5409531.90	390.00	0	D	250	105.0	0.0	0.0	0.0	0.0	79.3	2.7	-0.6	0.0	0.0	0.0	0.0	0.0	23.6
12	427738.40	5409531.90	390.00	0	D	500	114.6	0.0	0.0	0.0	0.0	79.3	5.0	-2.0	0.0	0.0	0.0	0.0	0.0	32.3
12	427738.40	5409531.90	390.00	0	D	1000	117.4	0.0	0.0	0.0	0.0	79.3	9.5	-2.0	0.0	0.0	0.0	0.0	0.0	30.6
12	427738.40	5409531.90	390.00	0	D	2000	117.8	0.0	0.0	0.0	0.0	79.3	25.1	-2.0	0.0	0.0	0.0	0.0	0.0	15.4
12	427738.40	5409531.90	390.00	0	D	4000	112.6	0.0	0.0	0.0	0.0	79.3	85.1	-2.0	0.0	0.0	0.0	0.0	0.0	-49.8
12	427738.40	5409531.90	390.00	0	D	8000	83.5	0.0	0.0	0.0	0.0	79.3	303.4	-2.0	0.0	0.0	0.0	0.0	0.0	-297.2
12	427738.40	5409531.90	390.00	0	N	32	73.5	0.0	-188.0	0.0	0.0	79.3	0.1	-5.7	0.0	0.0	0.0	0.0	0.0	-188.1
12	427738.40	5409531.90	390.00	0	N	63	92.5	0.0	-188.0	0.0	0.0	79.3	0.3	-5.7	0.0	0.0	0.0	0.0	0.0	-169.4
12	427738.40	5409531.90	390.00	0	N	125	101.3	0.0	-188.0	0.0	0.0	79.3	1.1	1.8	0.0	0.0	0.0	0.0	0.0	-168.9
12	427738.40	5409531.90	390.00	0	N	250	105.0	0.0	-188.0	0.0	0.0	79.3	2.7	-0.6	0.0	0.0	0.0	0.0	0.0	-164.4
12	427738.40	5409531.90	390.00	0	N	500	114.6	0.0	-188.0	0.0	0.0	79.3	5.0	-2.0	0.0	0.0	0.0	0.0	0.0	-155.7
12	427738.40	5409531.90	390.00	0	N	1000	117.4	0.0	-188.0	0.0	0.0	79.3	9.5	-2.0	0.0	0.0	0.0	0.0	0.0	-157.4
12	427738.40	5409531.90	390.00	0	N	2000	117.8	0.0	-188.0	0.0	0.0	79.3	25.1	-2.0	0.0	0.0	0.0	0.0	0.0	-172.6
12	427738.40	5409531.90	390.00	0	N	4000	112.6	0.0	-188.0	0.0	0.0	79.3	85.1	-2.0	0.0	0.0	0.0	0.0	0.0	-237.8
12	427738.40	5409531.90	390.00	0	N	8000	83.5	0.0	-188.0	0.0	0.0	79.3	303.4	-2.0	0.0	0.0	0.0	0.0	0.0	-485.2
12	427738.40	5409531.90	390.00	0	E	32	73.5	0.0	-188.0	0.0	0.0	79.3	0.1	-5.7	0.0	0.0	0.0	0.0	0.0	-188.1
12	427738.40	5409531.90	390.00	0	E	63	92.5	0.0	-188.0	0.0	0.0	79.3	0.3	-5.7	0.0	0.0	0.0	0.0	0.0	-169.4

Point Source, ISO 9613, Name: "EO_SCNR", ID: ""																				
Nr.	X	Y	Z	Refl.	DEN	Freq.	Lw	l/a	Optime	K0	Dc	Adiv	Aatm	Agr	Afol	Ahous	Abar	Cmet	RL	Lr
	(m)	(m)	(m)			(Hz)	dB(A)	dB	dB	(dB)	(dB)	(dB)	(dB)	(dB)	(dB)	(dB)	(dB)	(dB)	(dB)	dB(A)
12	427738.40	5409531.90	390.00	0	E	125	101.3	0.0	-188.0	0.0	0.0	79.3	1.1	1.8	0.0	0.0	0.0	0.0	0.0	-168.9
12	427738.40	5409531.90	390.00	0	E	250	105.0	0.0	-188.0	0.0	0.0	79.3	2.7	-0.6	0.0	0.0	0.0	0.0	0.0	-164.4
12	427738.40	5409531.90	390.00	0	E	500	114.6	0.0	-188.0	0.0	0.0	79.3	5.0	-2.0	0.0	0.0	0.0	0.0	0.0	-155.7
12	427738.40	5409531.90	390.00	0	E	1000	117.4	0.0	-188.0	0.0	0.0	79.3	9.5	-2.0	0.0	0.0	0.0	0.0	0.0	-157.4
12	427738.40	5409531.90	390.00	0	E	2000	117.8	0.0	-188.0	0.0	0.0	79.3	25.1	-2.0	0.0	0.0	0.0	0.0	0.0	-172.6
12	427738.40	5409531.90	390.00	0	E	4000	112.6	0.0	-188.0	0.0	0.0	79.3	85.1	-2.0	0.0	0.0	0.0	0.0	0.0	-237.8
12	427738.40	5409531.90	390.00	0	E	8000	83.5	0.0	-188.0	0.0	0.0	79.3	303.4	-2.0	0.0	0.0	0.0	0.0	0.0	-485.2

Point Source, ISO 9613, Name: "BD4", ID: ""																				
Nr.	X	Y	Z	Refl.	DEN	Freq.	Lw	l/a	Optime	K0	Dc	Adiv	Aatm	Agr	Afol	Ahous	Abar	Cmet	RL	Lr
	(m)	(m)	(m)			(Hz)	dB(A)	dB	dB	(dB)	(dB)	(dB)	(dB)	(dB)	(dB)	(dB)	(dB)	(dB)	(dB)	dB(A)
13	425472.24	5409584.95	196.94	0	DEN	32	65.4	0.0	0.0	0.0	0.0	81.4	0.1	-5.8	0.0	0.0	19.0	0.0	0.0	-29.3
13	425472.24	5409584.95	196.94	0	DEN	63	84.2	0.0	0.0	0.0	0.0	81.4	0.4	-5.8	0.0	0.0	20.0	0.0	0.0	-11.8
13	425472.24	5409584.95	196.94	0	DEN	125	93.1	0.0	0.0	0.0	0.0	81.4	1.4	2.1	0.0	0.0	17.9	0.0	0.0	-9.6
13	425472.24	5409584.95	196.94	0	DEN	250	97.8	0.0	0.0	0.0	0.0	81.4	3.4	-0.4	0.0	0.0	20.0	0.0	0.0	-6.6
13	425472.24	5409584.95	196.94	0	DEN	500	107.3	0.0	0.0	0.0	0.0	81.4	6.4	-1.8	0.0	0.0	20.0	0.0	0.0	1.4
13	425472.24	5409584.95	196.94	0	DEN	1000	110.5	0.0	0.0	0.0	0.0	81.4	12.1	-1.8	0.0	0.0	20.0	0.0	0.0	-1.1
13	425472.24	5409584.95	196.94	0	DEN	2000	112.4	0.0	0.0	0.0	0.0	81.4	31.9	-1.8	0.0	0.0	20.0	0.0	0.0	-19.0
13	425472.24	5409584.95	196.94	0	DEN	4000	108.6	0.0	0.0	0.0	0.0	81.4	108.1	-1.8	0.0	0.0	20.0	0.0	0.0	-99.0
13	425472.24	5409584.95	196.94	0	DEN	8000	109.0	0.0	0.0	0.0	0.0	81.4	385.4	-1.8	0.0	0.0	20.0	0.0	0.0	-375.9

Point Source, ISO 9613, Name: "BD3", ID: ""																				
Nr.	X	Y	Z	Refl.	DEN	Freq.	Lw	l/a	Optime	K0	Dc	Adiv	Aatm	Agr	Afol	Ahous	Abar	Cmet	RL	Lr
	(m)	(m)	(m)			(Hz)	dB(A)	dB	dB	(dB)	(dB)	(dB)	(dB)	(dB)	(dB)	(dB)	(dB)	(dB)	(dB)	dB(A)
14	425443.93	5409572.19	274.78	0	DEN	32	65.4	0.0	0.0	0.0	0.0	81.4	0.1	-5.8	0.0	0.0	4.9	0.0	0.0	-15.2
14	425443.93	5409572.19	274.78	0	DEN	63	84.2	0.0	0.0	0.0	0.0	81.4	0.4	-5.8	0.0	0.0	5.0	0.0	0.0	3.2
14	425443.93	5409572.19	274.78	0	DEN	125	93.1	0.0	0.0	0.0	0.0	81.4	1.4	2.0	0.0	0.0	3.1	0.0	0.0	5.2
14	425443.93	5409572.19	274.78	0	DEN	250	97.8	0.0	0.0	0.0	0.0	81.4	3.4	-0.4	0.0	0.0	5.4	0.0	0.0	8.0
14	425443.93	5409572.19	274.78	0	DEN	500	107.3	0.0	0.0	0.0	0.0	81.4	6.4	-1.8	0.0	0.0	6.0	0.0	0.0	15.4
14	425443.93	5409572.19	274.78	0	DEN	1000	110.5	0.0	0.0	0.0	0.0	81.4	12.1	-1.8	0.0	0.0	7.0	0.0	0.0	11.9
14	425443.93	5409572.19	274.78	0	DEN	2000	112.4	0.0	0.0	0.0	0.0	81.4	31.9	-1.8	0.0	0.0	8.5	0.0	0.0	-7.5
14	425443.93	5409572.19	274.78	0	DEN	4000	108.6	0.0	0.0	0.0	0.0	81.4	108.2	-1.8	0.0	0.0	10.4	0.0	0.0	-89.6
14	425443.93	5409572.19	274.78	0	DEN	8000	109.0	0.0	0.0	0.0	0.0	81.4	385.8	-1.8	0.0	0.0	12.8	0.0	0.0	-369.2

Point Source, ISO 9613, Name: "BD2", ID: ""																				
Nr.	X	Y	Z	Refl.	DEN	Freq.	Lw	l/a	Optime	K0	Dc	Adiv	Aatm	Agr	Afol	Ahous	Abar	Cmet	RL	Lr
	(m)	(m)	(m)			(Hz)	dB(A)	dB	dB	(dB)	(dB)	(dB)	(dB)	(dB)	(dB)	(dB)	(dB)	(dB)	(dB)	dB(A)
15	425462.14	5409605.87	186.49	0	DEN	32	65.4	0.0	0.0	0.0	0.0	81.4	0.1	-5.8	0.0	0.0	18.1	0.0	0.0	-28.5
15	425462.14	5409605.87	186.49	0	DEN	63	84.2	0.0	0.0	0.0	0.0	81.4	0.4	-5.8	0.0	0.0	20.0	0.0	0.0	-11.9
15	425462.14	5409605.87	186.49	0	DEN	125	93.1	0.0	0.0	0.0	0.0	81.4	1.4	2.0	0.0	0.0	18.0	0.0	0.0	-9.7
15	425462.14	5409605.87	186.49	0	DEN	250	97.8	0.0	0.0	0.0	0.0	81.4	3.5	-0.5	0.0	0.0	20.0	0.0	0.0	-6.6
15	425462.14	5409605.87	186.49	0	DEN	500	107.3	0.0	0.0	0.0	0.0	81.4	6.4	-1.9	0.0	0.0	20.0	0.0	0.0	1.3
15	425462.14	5409605.87	186.49	0	DEN	1000	110.5	0.0	0.0	0.0	0.0	81.4	12.1	-1.9	0.0	0.0	20.0	0.0	0.0	-1.2
15	425462.14	5409605.87	186.49	0	DEN	2000	112.4	0.0	0.0	0.0	0.0	81.4	32.1	-1.9	0.0	0.0	20.0	0.0	0.0	-19.3
15	425462.14	5409605.87	186.49	0	DEN	4000	108.6	0.0	0.0	0.0	0.0	81.4	108.8	-1.9	0.0	0.0	20.0	0.0	0.0	-99.8
15	425462.14	5409605.87	186.49	0	DEN	8000	109.0	0.0	0.0	0.0	0.0	81.4	388.1	-1.9	0.0	0.0	20.0	0.0	0.0	-378.7

Point Source, ISO 9613, Name: "BD1", ID: ""																				
Nr.	X	Y	Z	Refl.	DEN	Freq.	Lw	l/a	Optime	K0	Dc	Adiv	Aatm	Agr	Afol	Ahous	Abar	Cmet	RL	Lr
	(m)	(m)	(m)			(Hz)	dB(A)	dB	dB	(dB)	(dB)	(dB)	(dB)	(dB)	(dB)	(dB)	(dB)	(dB)	(dB)	dB(A)
16	425446.18	5409606.15	184.75	0	DEN	32	65.4	0.0	0.0	0.0	0.0	81.5	0.1	-5.8	0.0	0.0	18.5	0.0	0.0	-28.9
16	425446.18	5409606.15	184.75	0	DEN	63	84.2	0.0	0.0	0.0	0.0	81.5	0.4	-5.8	0.0	0.0	20.0	0.0	0.0	-11.9
16	425446.18	5409606.15	184.75	0	DEN	125	93.1	0.0	0.0	0.0	0.0	81.5	1.4	2.0	0.0	0.0	18.0	0.0	0.0	-9.7
16	425446.18	5409606.15	184.75	0	DEN	250	97.8	0.0	0.0	0.0	0.0	81.5	3.5	-0.5	0.0	0.0	20.0	0.0	0.0	-6.7
16	425446.18	5409606.15	184.75	0	DEN	500	107.3	0.0	0.0	0.0	0.0	81.5	6.4	-1.9	0.0	0.0	20.0	0.0	0.0	1.3
16	425446.18	5409606.15	184.75	0	DEN	1000	110.5	0.0	0.0	0.0	0.0	81.5	12.2	-1.9	0.0	0.0	20.0	0.0	0.0	-1.3
16	425446.18	5409606.15	184.75	0	DEN	2000	112.4	0.0	0.0	0.0	0.0	81.5	32.2	-1.9	0.0	0.0	20.0	0.0	0.0	-19.4
16	425446.18	5409606.15	184.75	0	DEN	4000	108.6	0.0	0.0	0.0	0.0	81.5	109.1	-1.9	0.0	0.0	20.0	0.0	0.0	-100.1
16	425446.18	5409606.15	184.75	0	DEN	8000	109.0	0.0	0.0	0.0	0.0	81.5	389.3	-1.9	0.0	0.0	20.0	0.0	0.0	-379.9

Point Source, ISO 9613, Name: "BD5", ID: ""																				
Nr.	X	Y	Z	Refl.	DEN	Freq.	Lw	l/a	Optime	K0	Dc	Adiv	Aatm	Agr	Afol	Ahous	Abar	Cmet	RL	Lr
	(m)	(m)	(m)			(Hz)	dB(A)	dB	dB	(dB)	(dB)	(dB)	(dB)	(dB)	(dB)	(dB)	(dB)	(dB)	(dB)	dB(A)
17	425476.74	5409705.69	194.03	0	DEN	32	65.4	0.0	0.0	0.0	0.0	81.6	0.1	-5.8	0.0	0.0	11.0	0.0	0.0	-21.5

Point Source, ISO 9613, Name: "BD5", ID: ""																					
Nr.	X	Y	Z	Refl.	DEN	Freq.	Lw	l/a	Optime	K0	Dc	Adiv	Aatm	Agr	Afol	Ahous	Abar	Cmet	RL	Lr
	(m)	(m)	(m)			(Hz)	dB(A)	dB	dB	(dB)	(dB)	(dB)	(dB)	(dB)	(dB)	(dB)	(dB)	(dB)	(dB)	dB(A)
17	425476.74	5409705.69	194.03	0	DEN	63	84.2	0.0	0.0	0.0	0.0	81.6	0.4	-5.8	0.0	0.0	13.5	0.0	0.0	-5.5
17	425476.74	5409705.69	194.03	0	DEN	125	93.1	0.0	0.0	0.0	0.0	81.6	1.4	1.9	0.0	0.0	14.2	0.0	0.0	-6.0
17	425476.74	5409705.69	194.03	0	DEN	250	97.8	0.0	0.0	0.0	0.0	81.6	3.5	-0.6	0.0	0.0	19.0	0.0	0.0	-5.8
17	425476.74	5409705.69	194.03	0	DEN	500	107.3	0.0	0.0	0.0	0.0	81.6	6.5	-1.9	0.0	0.0	20.0	0.0	0.0	1.1
17	425476.74	5409705.69	194.03	0	DEN	1000	110.5	0.0	0.0	0.0	0.0	81.6	12.4	-1.9	0.0	0.0	20.0	0.0	0.0	-1.6
17	425476.74	5409705.69	194.03	0	DEN	2000	112.4	0.0	0.0	0.0	0.0	81.6	32.8	-1.9	0.0	0.0	20.0	0.0	0.0	-20.0
17	425476.74	5409705.69	194.03	0	DEN	4000	108.6	0.0	0.0	0.0	0.0	81.6	111.2	-1.9	0.0	0.0	20.0	0.0	0.0	-102.2
17	425476.74	5409705.69	194.03	0	DEN	8000	109.0	0.0	0.0	0.0	0.0	81.6	396.5	-1.9	0.0	0.0	20.0	0.0	0.0	-387.1

Point Source, ISO 9613, Name: "E6", ID: ""																					
Nr.	X	Y	Z	Refl.	DEN	Freq.	Lw	l/a	Optime	K0	Dc	Adiv	Aatm	Agr	Afol	Ahous	Abar	Cmet	RL	Lr
	(m)	(m)	(m)			(Hz)	dB(A)	dB	dB	(dB)	(dB)	(dB)	(dB)	(dB)	(dB)	(dB)	(dB)	(dB)	(dB)	dB(A)
18	425560.41	5409585.02	187.29	0	DEN	32	73.7	0.0	0.0	0.0	0.0	81.2	0.1	-5.8	0.0	0.0	17.9	0.0	0.0	-19.8
18	425560.41	5409585.02	187.29	0	DEN	63	89.2	0.0	0.0	0.0	0.0	81.2	0.4	-5.8	0.0	0.0	20.0	0.0	0.0	-6.7
18	425560.41	5409585.02	187.29	0	DEN	125	100.9	0.0	0.0	0.0	0.0	81.2	1.3	2.0	0.0	0.0	18.0	0.0	0.0	-1.7
18	425560.41	5409585.02	187.29	0	DEN	250	108.4	0.0	0.0	0.0	0.0	81.2	3.4	-0.4	0.0	0.0	20.0	0.0	0.0	4.2
18	425560.41	5409585.02	187.29	0	DEN	500	110.1	0.0	0.0	0.0	0.0	81.2	6.3	-1.8	0.0	0.0	20.0	0.0	0.0	4.4
18	425560.41	5409585.02	187.29	0	DEN	1000	111.9	0.0	0.0	0.0	0.0	81.2	11.9	-1.8	0.0	0.0	20.0	0.0	0.0	0.6
18	425560.41	5409585.02	187.29	0	DEN	2000	109.3	0.0	0.0	0.0	0.0	81.2	31.4	-1.8	0.0	0.0	20.0	0.0	0.0	-21.5
18	425560.41	5409585.02	187.29	0	DEN	4000	100.0	0.0	0.0	0.0	0.0	81.2	106.4	-1.8	0.0	0.0	20.0	0.0	0.0	-105.8
18	425560.41	5409585.02	187.29	0	DEN	8000	92.1	0.0	0.0	0.0	0.0	81.2	379.4	-1.8	0.0	0.0	20.0	0.0	0.0	-386.7

Point Source, ISO 9613, Name: "WL1", ID: ""																					
Nr.	X	Y	Z	Refl.	DEN	Freq.	Lw	l/a	Optime	K0	Dc	Adiv	Aatm	Agr	Afol	Ahous	Abar	Cmet	RL	Lr
	(m)	(m)	(m)			(Hz)	dB(A)	dB	dB	(dB)	(dB)	(dB)	(dB)	(dB)	(dB)	(dB)	(dB)	(dB)	(dB)	dB(A)
19	425417.86	5409658.62	186.00	0	DEN	32	73.1	0.0	0.0	0.0	0.0	81.6	0.1	-5.7	0.0	0.0	15.3	0.0	0.0	-18.2
19	425417.86	5409658.62	186.00	0	DEN	63	94.7	0.0	0.0	0.0	0.0	81.6	0.4	-5.7	0.0	0.0	18.1	0.0	0.0	0.3
19	425417.86	5409658.62	186.00	0	DEN	125	107.4	0.0	0.0	0.0	0.0	81.6	1.4	2.0	0.0	0.0	18.0	0.0	0.0	4.4
19	425417.86	5409658.62	186.00	0	DEN	250	104.2	0.0	0.0	0.0	0.0	81.6	3.5	-0.5	0.0	0.0	20.0	0.0	0.0	-0.5
19	425417.86	5409658.62	186.00	0	DEN	500	108.2	0.0	0.0	0.0	0.0	81.6	6.5	-1.9	0.0	0.0	20.0	0.0	0.0	1.9
19	425417.86	5409658.62	186.00	0	DEN	1000	110.1	0.0	0.0	0.0	0.0	81.6	12.4	-1.9	0.0	0.0	20.0	0.0	0.0	-2.0
19	425417.86	5409658.62	186.00	0	DEN	2000	111.0	0.0	0.0	0.0	0.0	81.6	32.8	-1.9	0.0	0.0	20.0	0.0	0.0	-21.5
19	425417.86	5409658.62	186.00	0	DEN	4000	106.0	0.0	0.0	0.0	0.0	81.6	111.1	-1.9	0.0	0.0	20.0	0.0	0.0	-104.8
19	425417.86	5409658.62	186.00	0	DEN	8000	99.4	0.0	0.0	0.0	0.0	81.6	396.1	-1.9	0.0	0.0	20.0	0.0	0.0	-396.5

Point Source, ISO 9613, Name: "E2", ID: ""																					
Nr.	X	Y	Z	Refl.	DEN	Freq.	Lw	l/a	Optime	K0	Dc	Adiv	Aatm	Agr	Afol	Ahous	Abar	Cmet	RL	Lr
	(m)	(m)	(m)			(Hz)	dB(A)	dB	dB	(dB)	(dB)	(dB)	(dB)	(dB)	(dB)	(dB)	(dB)	(dB)	(dB)	dB(A)
20	425547.03	5409599.19	184.00	0	DEN	32	74.1	0.0	0.0	0.0	0.0	81.3	0.1	-5.8	0.0	0.0	17.3	0.0	0.0	-18.9
20	425547.03	5409599.19	184.00	0	DEN	63	92.0	0.0	0.0	0.0	0.0	81.3	0.4	-5.8	0.0	0.0	20.0	0.0	0.0	-3.9
20	425547.03	5409599.19	184.00	0	DEN	125	105.9	0.0	0.0	0.0	0.0	81.3	1.3	2.0	0.0	0.0	18.0	0.0	0.0	3.3
20	425547.03	5409599.19	184.00	0	DEN	250	108.3	0.0	0.0	0.0	0.0	81.3	3.4	-0.4	0.0	0.0	20.0	0.0	0.0	4.1
20	425547.03	5409599.19	184.00	0	DEN	500	110.5	0.0	0.0	0.0	0.0	81.3	6.3	-1.8	0.0	0.0	20.0	0.0	0.0	4.8
20	425547.03	5409599.19	184.00	0	DEN	1000	109.4	0.0	0.0	0.0	0.0	81.3	11.9	-1.8	0.0	0.0	20.0	0.0	0.0	-2.0
20	425547.03	5409599.19	184.00	0	DEN	2000	107.3	0.0	0.0	0.0	0.0	81.3	31.6	-1.8	0.0	0.0	20.0	0.0	0.0	-23.7
20	425547.03	5409599.19	184.00	0	DEN	4000	100.1	0.0	0.0	0.0	0.0	81.3	107.0	-1.8	0.0	0.0	20.0	0.0	0.0	-106.3
20	425547.03	5409599.19	184.00	0	DEN	8000	90.7	0.0	0.0	0.0	0.0	81.3	381.6	-1.8	0.0	0.0	20.0	0.0	0.0	-390.4

Point Source, ISO 9613, Name: "TD08D", ID: ""																					
Nr.	X	Y	Z	Refl.	DEN	Freq.	Lw	l/a	Optime	K0	Dc	Adiv	Aatm	Agr	Afol	Ahous	Abar	Cmet	RL	Lr
	(m)	(m)	(m)			(Hz)	dB(A)	dB	dB	(dB)	(dB)	(dB)	(dB)	(dB)	(dB)	(dB)	(dB)	(dB)	(dB)	dB(A)
21	427643.60	5410128.61	379.00	0	D	32	76.1	0.0	0.0	0.0	0.0	81.1	0.1	-5.8	0.0	0.0	4.8	0.0	0.0	-4.1
21	427643.60	5410128.61	379.00	0	D	63	89.7	0.0	0.0	0.0	0.0	81.1	0.4	-5.8	0.0	0.0	4.8	0.0	0.0	9.2
21	427643.60	5410128.61	379.00	0	D	125	103.2	0.0	0.0	0.0	0.0	81.1	1.3	1.1	0.0	0.0	3.6	0.0	0.0	16.1
21	427643.60	5410128.61	379.00	0	D	250	109.5	0.0	0.0	0.0	0.0	81.1	3.3	-1.3	0.0	0.0	4.8	0.0	0.0	21.7
21	427643.60	5410128.61	379.00	0	D	500	117.4	0.0	0.0	0.0	0.0	81.1	6.1	-2.7	0.0	0.0	4.8	0.0	0.0	28.1
21	427643.60	5410128.61	379.00	0	D	1000	114.9	0.0	0.0	0.0	0.0	81.1	11.6	-2.7	0.0	0.0	4.8	0.0	0.0	20.1
21	427643.60	5410128.61	379.00	0	D	2000	113.8	0.0	0.0	0.0	0.0	81.1	30.8	-2.7	0.0	0.0	4.8	0.0	0.0	-0.1
21	427643.60	5410128.61	379.00	0	D	4000	111.7	0.0	0.0	0.0	0.0	81.1	104.3	-2.7	0.0	0.0	4.8	0.0	0.0	-75.7
21	427643.60	5410128.61	379.00	0	D	8000	104.1	0.0	0.0	0.0	0.0	81.1	372.0	-2.7	0.0	0.0	4.8	0.0	0.0	-351.0
21	427643.60	5410128.61	379.00	0	N	32	76.1	0.0	-188.0	0.0	0.0	81.1	0.1	-5.8	0.0	0.0	4.8	0.0	0.0	-192.1
21	427643.60	5410128.61	379.00	0	N	63	89.7	0.0	-188.0	0.0	0.0	81.1	0.4	-5.8	0.0	0.0	4.8	0.0	0.0	-178.8
21	427643.60	5410128.61	379.00	0	N	125	103.2	0.0	-188.0	0.0	0.0	81.1	1.3	1.1	0.0	0.0	3.6	0.0	0.0	-171.9
21	427643.60	5410128.61	379.00	0	N	250	109.5	0.0	-188.0	0.0	0.0	81.1	3.3	-1.3	0.0	0.0	4.8	0.0	0.0	-166.3

Point Source, ISO 9613, Name: "TD08D", ID: ""																					
Nr.	X	Y	Z	Refl.	DEN	Freq.	Lw	l/a	Optime	K0	Dc	Adiv	Aatm	Agr	Afol	Ahous	Abar	Cmet	RL	Lr
	(m)	(m)	(m)			(Hz)	dB(A)	dB	dB	(dB)	(dB)	(dB)	(dB)	(dB)	(dB)	(dB)	(dB)	(dB)	(dB)	dB(A)
21	427643.60	5410128.61	379.00	0	N	500	117.4	0.0	-188.0	0.0	0.0	81.1	6.1	-2.7	0.0	0.0	4.8	0.0	0.0	-159.9
21	427643.60	5410128.61	379.00	0	N	1000	114.9	0.0	-188.0	0.0	0.0	81.1	11.6	-2.7	0.0	0.0	4.8	0.0	0.0	-167.9
21	427643.60	5410128.61	379.00	0	N	2000	113.8	0.0	-188.0	0.0	0.0	81.1	30.8	-2.7	0.0	0.0	4.8	0.0	0.0	-188.1
21	427643.60	5410128.61	379.00	0	N	4000	111.7	0.0	-188.0	0.0	0.0	81.1	104.3	-2.7	0.0	0.0	4.8	0.0	0.0	-263.7
21	427643.60	5410128.61	379.00	0	N	8000	104.1	0.0	-188.0	0.0	0.0	81.1	372.0	-2.7	0.0	0.0	4.8	0.0	0.0	-539.0
21	427643.60	5410128.61	379.00	0	E	32	76.1	0.0	-188.0	0.0	0.0	81.1	0.1	-5.8	0.0	0.0	4.8	0.0	0.0	-192.1
21	427643.60	5410128.61	379.00	0	E	63	89.7	0.0	-188.0	0.0	0.0	81.1	0.4	-5.8	0.0	0.0	4.8	0.0	0.0	-178.8
21	427643.60	5410128.61	379.00	0	E	125	103.2	0.0	-188.0	0.0	0.0	81.1	1.3	1.1	0.0	0.0	3.6	0.0	0.0	-171.9
21	427643.60	5410128.61	379.00	0	E	250	109.5	0.0	-188.0	0.0	0.0	81.1	3.3	-1.3	0.0	0.0	4.8	0.0	0.0	-166.3
21	427643.60	5410128.61	379.00	0	E	500	117.4	0.0	-188.0	0.0	0.0	81.1	6.1	-2.7	0.0	0.0	4.8	0.0	0.0	-159.9
21	427643.60	5410128.61	379.00	0	E	1000	114.9	0.0	-188.0	0.0	0.0	81.1	11.6	-2.7	0.0	0.0	4.8	0.0	0.0	-167.9
21	427643.60	5410128.61	379.00	0	E	2000	113.8	0.0	-188.0	0.0	0.0	81.1	30.8	-2.7	0.0	0.0	4.8	0.0	0.0	-188.1
21	427643.60	5410128.61	379.00	0	E	4000	111.7	0.0	-188.0	0.0	0.0	81.1	104.3	-2.7	0.0	0.0	4.8	0.0	0.0	-263.7
21	427643.60	5410128.61	379.00	0	E	8000	104.1	0.0	-188.0	0.0	0.0	81.1	372.0	-2.7	0.0	0.0	4.8	0.0	0.0	-539.0

Point Source, ISO 9613, Name: "E1", ID: ""																					
Nr.	X	Y	Z	Refl.	DEN	Freq.	Lw	l/a	Optime	K0	Dc	Adiv	Aatm	Agr	Afol	Ahous	Abar	Cmet	RL	Lr
	(m)	(m)	(m)			(Hz)	dB(A)	dB	dB	(dB)	(dB)	(dB)	(dB)	(dB)	(dB)	(dB)	(dB)	(dB)	(dB)	dB(A)
22	425413.33	5409602.18	268.10	0	DEN	32	74.1	0.0	0.0	0.0	0.0	81.5	0.1	-5.8	0.0	0.0	17.2	0.0	0.0	-18.9
22	425413.33	5409602.18	268.10	0	DEN	63	92.0	0.0	0.0	0.0	0.0	81.5	0.4	-5.8	0.0	0.0	20.0	0.0	0.0	-4.1
22	425413.33	5409602.18	268.10	0	DEN	125	105.9	0.0	0.0	0.0	0.0	81.5	1.4	2.0	0.0	0.0	18.0	0.0	0.0	3.0
22	425413.33	5409602.18	268.10	0	DEN	250	108.3	0.0	0.0	0.0	0.0	81.5	3.5	-0.4	0.0	0.0	20.0	0.0	0.0	3.8
22	425413.33	5409602.18	268.10	0	DEN	500	110.5	0.0	0.0	0.0	0.0	81.5	6.4	-1.8	0.0	0.0	20.0	0.0	0.0	4.4
22	425413.33	5409602.18	268.10	0	DEN	1000	109.4	0.0	0.0	0.0	0.0	81.5	12.2	-1.9	0.0	0.0	20.0	0.0	0.0	-2.5
22	425413.33	5409602.18	268.10	0	DEN	2000	107.3	0.0	0.0	0.0	0.0	81.5	32.3	-1.9	0.0	0.0	20.0	0.0	0.0	-24.6
22	425413.33	5409602.18	268.10	0	DEN	4000	100.1	0.0	0.0	0.0	0.0	81.5	109.6	-1.9	0.0	0.0	20.0	0.0	0.0	-109.1
22	425413.33	5409602.18	268.10	0	DEN	8000	90.7	0.0	0.0	0.0	0.0	81.5	390.8	-1.9	0.0	0.0	20.0	0.0	0.0	-399.8

Point Source, ISO 9613, Name: "WD", ID: ""																					
Nr.	X	Y	Z	Refl.	DEN	Freq.	Lw	l/a	Optime	K0	Dc	Adiv	Aatm	Agr	Afol	Ahous	Abar	Cmet	RL	Lr
	(m)	(m)	(m)			(Hz)	dB(A)	dB	dB	(dB)	(dB)	(dB)	(dB)	(dB)	(dB)	(dB)	(dB)	(dB)	(dB)	dB(A)
23	425558.89	5409562.62	197.46	0	DEN	63	89.8	0.0	0.0	0.0	0.0	81.2	0.4	-5.7	0.0	0.0	20.0	0.0	0.0	-6.1
23	425558.89	5409562.62	197.46	0	DEN	125	106.9	0.0	0.0	0.0	0.0	81.2	1.3	2.1	0.0	0.0	17.9	0.0	0.0	4.4
23	425558.89	5409562.62	197.46	0	DEN	250	101.4	0.0	0.0	0.0	0.0	81.2	3.4	-0.4	0.0	0.0	20.0	0.0	0.0	-2.8
23	425558.89	5409562.62	197.46	0	DEN	500	108.8	0.0	0.0	0.0	0.0	81.2	6.2	-1.7	0.0	0.0	20.0	0.0	0.0	3.1
23	425558.89	5409562.62	197.46	0	DEN	1000	111.0	0.0	0.0	0.0	0.0	81.2	11.8	-1.7	0.0	0.0	20.0	0.0	0.0	-0.2
23	425558.89	5409562.62	197.46	0	DEN	2000	108.2	0.0	0.0	0.0	0.0	81.2	31.2	-1.7	0.0	0.0	20.0	0.0	0.0	-22.4
23	425558.89	5409562.62	197.46	0	DEN	4000	99.0	0.0	0.0	0.0	0.0	81.2	105.8	-1.7	0.0	0.0	20.0	0.0	0.0	-106.2
23	425558.89	5409562.62	197.46	0	DEN	8000	89.9	0.0	0.0	0.0	0.0	81.2	377.3	-1.7	0.0	0.0	20.0	0.0	0.0	-386.8

Point Source, ISO 9613, Name: "TD07D", ID: ""																					
Nr.	X	Y	Z	Refl.	DEN	Freq.	Lw	l/a	Optime	K0	Dc	Adiv	Aatm	Agr	Afol	Ahous	Abar	Cmet	RL	Lr
	(m)	(m)	(m)			(Hz)	dB(A)	dB	dB	(dB)	(dB)	(dB)	(dB)	(dB)	(dB)	(dB)	(dB)	(dB)	(dB)	dB(A)
24	427582.33	5410172.98	379.00	0	D	32	76.1	0.0	0.0	0.0	0.0	81.2	0.1	-5.8	0.0	0.0	4.8	0.0	0.0	-4.2
24	427582.33	5410172.98	379.00	0	D	63	89.7	0.0	0.0	0.0	0.0	81.2	0.4	-5.8	0.0	0.0	4.8	0.0	0.0	9.1
24	427582.33	5410172.98	379.00	0	D	125	103.2	0.0	0.0	0.0	0.0	81.2	1.3	1.2	0.0	0.0	3.6	0.0	0.0	15.9
24	427582.33	5410172.98	379.00	0	D	250	109.5	0.0	0.0	0.0	0.0	81.2	3.4	-1.3	0.0	0.0	4.8	0.0	0.0	21.5
24	427582.33	5410172.98	379.00	0	D	500	117.4	0.0	0.0	0.0	0.0	81.2	6.2	-2.7	0.0	0.0	4.8	0.0	0.0	28.0
24	427582.33	5410172.98	379.00	0	D	1000	114.9	0.0	0.0	0.0	0.0	81.2	11.8	-2.7	0.0	0.0	4.8	0.0	0.0	19.9
24	427582.33	5410172.98	379.00	0	D	2000	113.8	0.0	0.0	0.0	0.0	81.2	31.2	-2.7	0.0	0.0	4.8	0.0	0.0	-0.5
24	427582.33	5410172.98	379.00	0	D	4000	111.7	0.0	0.0	0.0	0.0	81.2	105.6	-2.7	0.0	0.0	4.8	0.0	0.0	-77.1
24	427582.33	5410172.98	379.00	0	D	8000	104.1	0.0	0.0	0.0	0.0	81.2	376.8	-2.7	0.0	0.0	4.8	0.0	0.0	-355.9
24	427582.33	5410172.98	379.00	0	N	32	76.1	0.0	-188.0	0.0	0.0	81.2	0.1	-5.8	0.0	0.0	4.8	0.0	0.0	-192.2
24	427582.33	5410172.98	379.00	0	N	63	89.7	0.0	-188.0	0.0	0.0	81.2	0.4	-5.8	0.0	0.0	4.8	0.0	0.0	-178.9
24	427582.33	5410172.98	379.00	0	N	125	103.2	0.0	-188.0	0.0	0.0	81.2	1.3	1.2	0.0	0.0	3.6	0.0	0.0	-172.1
24	427582.33	5410172.98	379.00	0	N	250	109.5	0.0	-188.0	0.0	0.0	81.2	3.4	-1.3	0.0	0.0	4.8	0.0	0.0	-166.5
24	427582.33	5410172.98	379.00	0	N	500	117.4	0.0	-188.0	0.0	0.0	81.2	6.2	-2.7	0.0	0.0	4.8	0.0	0.0	-160.0
24	427582.33	5410172.98	379.00	0	N	1000	114.9	0.0	-188.0	0.0	0.0	81.2	11.8	-2.7	0.0	0.0	4.8	0.0	0.0	-168.1
24	427582.33	5410172.98	379.00	0	N	2000	113.8	0.0	-188.0	0.0	0.0	81.2	31.2	-2.7	0.0	0.0	4.8	0.0	0.0	-188.5
24	427582.33	5410172.98	379.00	0	N	4000	111.7	0.0	-188.0	0.0	0.0	81.2	105.6	-2.7	0.0	0.0	4.8	0.0	0.0	-265.1
24	427582.33	5410172.98	379.00	0	N	8000	104.1	0.0	-188.0	0.0	0.0	81.2	376.8	-2.7	0.0	0.0	4.8	0.0	0.0	-543.9
24	427582.33	5410172.98	379.00	0	E	32	76.1	0.0	-188.0	0.0	0.0	81.2	0.1	-5.8	0.0	0.0	4.8	0.0	0.0	-192.2
24	427582.33	5410172.98	379.00	0	E	63	89.7	0.0	-188.0	0.0	0.0	81.2	0.4	-5.8	0.0	0.0	4.8	0.0	0.0	-178.9

Point Source, ISO 9613, Name: "TD07D", ID: ""																				
Nr.	X	Y	Z	Refl.	DEN	Freq.	Lw	l/a	Optime	K0	Dc	Adiv	Aatm	Agr	Afol	Ahous	Abar	Cmet	RL	Lr
	(m)	(m)	(m)			(Hz)	dB(A)	dB	dB	(dB)	(dB)	(dB)	(dB)	(dB)	(dB)	(dB)	(dB)	(dB)	(dB)	dB(A)
24	427582.33	5410172.98	379.00	0	E	125	103.2	0.0	-188.0	0.0	0.0	81.2	1.3	1.2	0.0	0.0	3.6	0.0	0.0	-172.1
24	427582.33	5410172.98	379.00	0	E	250	109.5	0.0	-188.0	0.0	0.0	81.2	3.4	-1.3	0.0	0.0	4.8	0.0	0.0	-166.5
24	427582.33	5410172.98	379.00	0	E	500	117.4	0.0	-188.0	0.0	0.0	81.2	6.2	-2.7	0.0	0.0	4.8	0.0	0.0	-160.0
24	427582.33	5410172.98	379.00	0	E	1000	114.9	0.0	-188.0	0.0	0.0	81.2	11.8	-2.7	0.0	0.0	4.8	0.0	0.0	-168.1
24	427582.33	5410172.98	379.00	0	E	2000	113.8	0.0	-188.0	0.0	0.0	81.2	31.2	-2.7	0.0	0.0	4.8	0.0	0.0	-188.5
24	427582.33	5410172.98	379.00	0	E	4000	111.7	0.0	-188.0	0.0	0.0	81.2	105.6	-2.7	0.0	0.0	4.8	0.0	0.0	-265.1
24	427582.33	5410172.98	379.00	0	E	8000	104.1	0.0	-188.0	0.0	0.0	81.2	376.8	-2.7	0.0	0.0	4.8	0.0	0.0	-543.9

Point Source, ISO 9613, Name: "TD04", ID: ""																				
Nr.	X	Y	Z	Refl.	DEN	Freq.	Lw	l/a	Optime	K0	Dc	Adiv	Aatm	Agr	Afol	Ahous	Abar	Cmet	RL	Lr
	(m)	(m)	(m)			(Hz)	dB(A)	dB	dB	(dB)	(dB)	(dB)	(dB)	(dB)	(dB)	(dB)	(dB)	(dB)	(dB)	dB(A)
25	425597.37	5409636.80	184.00	0	DEN	32	68.0	0.0	0.0	0.0	0.0	81.3	0.1	-5.8	0.0	0.0	15.7	0.0	0.0	-23.3
25	425597.37	5409636.80	184.00	0	DEN	63	84.6	0.0	0.0	0.0	0.0	81.3	0.4	-5.8	0.0	0.0	18.6	0.0	0.0	-9.9
25	425597.37	5409636.80	184.00	0	DEN	125	98.8	0.0	0.0	0.0	0.0	81.3	1.3	2.0	0.0	0.0	18.0	0.0	0.0	-3.8
25	425597.37	5409636.80	184.00	0	DEN	250	105.0	0.0	0.0	0.0	0.0	81.3	3.4	-0.5	0.0	0.0	20.0	0.0	0.0	0.8
25	425597.37	5409636.80	184.00	0	DEN	500	110.2	0.0	0.0	0.0	0.0	81.3	6.3	-1.9	0.0	0.0	20.0	0.0	0.0	4.5
25	425597.37	5409636.80	184.00	0	DEN	1000	110.4	0.0	0.0	0.0	0.0	81.3	11.9	-1.9	0.0	0.0	20.0	0.0	0.0	-1.0
25	425597.37	5409636.80	184.00	0	DEN	2000	108.3	0.0	0.0	0.0	0.0	81.3	31.6	-1.9	0.0	0.0	20.0	0.0	0.0	-22.7
25	425597.37	5409636.80	184.00	0	DEN	4000	99.9	0.0	0.0	0.0	0.0	81.3	107.1	-1.9	0.0	0.0	20.0	0.0	0.0	-106.6
25	425597.37	5409636.80	184.00	0	DEN	8000	91.3	0.0	0.0	0.0	0.0	81.3	381.8	-1.9	0.0	0.0	20.0	0.0	0.0	-390.0

Point Source, ISO 9613, Name: "EO_FEL", ID: ""																				
Nr.	X	Y	Z	Refl.	DEN	Freq.	Lw	l/a	Optime	K0	Dc	Adiv	Aatm	Agr	Afol	Ahous	Abar	Cmet	RL	Lr
	(m)	(m)	(m)			(Hz)	dB(A)	dB	dB	(dB)	(dB)	(dB)	(dB)	(dB)	(dB)	(dB)	(dB)	(dB)	(dB)	dB(A)
26	427734.51	5409525.67	391.00	0	D	32	68.7	0.0	0.0	0.0	0.0	79.3	0.1	-5.7	0.0	0.0	0.0	0.0	0.0	-4.9
26	427734.51	5409525.67	391.00	0	D	63	95.8	0.0	0.0	0.0	0.0	79.3	0.3	-5.7	0.0	0.0	0.0	0.0	0.0	21.9
26	427734.51	5409525.67	391.00	0	D	125	97.9	0.0	0.0	0.0	0.0	79.3	1.1	1.9	0.0	0.0	0.0	0.0	0.0	15.7
26	427734.51	5409525.67	391.00	0	D	250	100.5	0.0	0.0	0.0	0.0	79.3	2.7	-0.6	0.0	0.0	0.0	0.0	0.0	19.1
26	427734.51	5409525.67	391.00	0	D	500	111.7	0.0	0.0	0.0	0.0	79.3	5.0	-2.0	0.0	0.0	0.0	0.0	0.0	29.4
26	427734.51	5409525.67	391.00	0	D	1000	116.1	0.0	0.0	0.0	0.0	79.3	9.5	-2.0	0.0	0.0	0.0	0.0	0.0	29.3
26	427734.51	5409525.67	391.00	0	D	2000	112.5	0.0	0.0	0.0	0.0	79.3	25.0	-2.0	0.0	0.0	0.0	0.0	0.0	10.2
26	427734.51	5409525.67	391.00	0	D	4000	107.0	0.0	0.0	0.0	0.0	79.3	84.9	-2.0	0.0	0.0	0.0	0.0	0.0	-55.2
26	427734.51	5409525.67	391.00	0	D	8000	83.5	0.0	0.0	0.0	0.0	79.3	302.7	-2.0	0.0	0.0	0.0	0.0	0.0	-296.5
26	427734.51	5409525.67	391.00	0	N	32	68.7	0.0	-188.0	0.0	0.0	79.3	0.1	-5.7	0.0	0.0	0.0	0.0	0.0	-192.9
26	427734.51	5409525.67	391.00	0	N	63	95.8	0.0	-188.0	0.0	0.0	79.3	0.3	-5.7	0.0	0.0	0.0	0.0	0.0	-166.1
26	427734.51	5409525.67	391.00	0	N	125	97.9	0.0	-188.0	0.0	0.0	79.3	1.1	1.9	0.0	0.0	0.0	0.0	0.0	-172.3
26	427734.51	5409525.67	391.00	0	N	250	100.5	0.0	-188.0	0.0	0.0	79.3	2.7	-0.6	0.0	0.0	0.0	0.0	0.0	-168.9
26	427734.51	5409525.67	391.00	0	N	500	111.7	0.0	-188.0	0.0	0.0	79.3	5.0	-2.0	0.0	0.0	0.0	0.0	0.0	-158.6
26	427734.51	5409525.67	391.00	0	N	1000	116.1	0.0	-188.0	0.0	0.0	79.3	9.5	-2.0	0.0	0.0	0.0	0.0	0.0	-158.7
26	427734.51	5409525.67	391.00	0	N	2000	112.5	0.0	-188.0	0.0	0.0	79.3	25.0	-2.0	0.0	0.0	0.0	0.0	0.0	-177.8
26	427734.51	5409525.67	391.00	0	N	4000	107.0	0.0	-188.0	0.0	0.0	79.3	84.9	-2.0	0.0	0.0	0.0	0.0	0.0	-243.2
26	427734.51	5409525.67	391.00	0	N	8000	83.5	0.0	-188.0	0.0	0.0	79.3	302.7	-2.0	0.0	0.0	0.0	0.0	0.0	-484.5
26	427734.51	5409525.67	391.00	0	E	32	68.7	0.0	-188.0	0.0	0.0	79.3	0.1	-5.7	0.0	0.0	0.0	0.0	0.0	-192.9
26	427734.51	5409525.67	391.00	0	E	63	95.8	0.0	-188.0	0.0	0.0	79.3	0.3	-5.7	0.0	0.0	0.0	0.0	0.0	-166.1
26	427734.51	5409525.67	391.00	0	E	125	97.9	0.0	-188.0	0.0	0.0	79.3	1.1	1.9	0.0	0.0	0.0	0.0	0.0	-172.3
26	427734.51	5409525.67	391.00	0	E	250	100.5	0.0	-188.0	0.0	0.0	79.3	2.7	-0.6	0.0	0.0	0.0	0.0	0.0	-168.9
26	427734.51	5409525.67	391.00	0	E	500	111.7	0.0	-188.0	0.0	0.0	79.3	5.0	-2.0	0.0	0.0	0.0	0.0	0.0	-158.6
26	427734.51	5409525.67	391.00	0	E	1000	116.1	0.0	-188.0	0.0	0.0	79.3	9.5	-2.0	0.0	0.0	0.0	0.0	0.0	-158.7
26	427734.51	5409525.67	391.00	0	E	2000	112.5	0.0	-188.0	0.0	0.0	79.3	25.0	-2.0	0.0	0.0	0.0	0.0	0.0	-177.8
26	427734.51	5409525.67	391.00	0	E	4000	107.0	0.0	-188.0	0.0	0.0	79.3	84.9	-2.0	0.0	0.0	0.0	0.0	0.0	-243.2
26	427734.51	5409525.67	391.00	0	E	8000	83.5	0.0	-188.0	0.0	0.0	79.3	302.7	-2.0	0.0	0.0	0.0	0.0	0.0	-484.5

Point Source, ISO 9613, Name: "TD08N", ID: ""																				
Nr.	X	Y	Z	Refl.	DEN	Freq.	Lw	l/a	Optime	K0	Dc	Adiv	Aatm	Agr	Afol	Ahous	Abar	Cmet	RL	Lr
	(m)	(m)	(m)			(Hz)	dB(A)	dB	dB	(dB)	(dB)	(dB)	(dB)	(dB)	(dB)	(dB)	(dB)	(dB)	(dB)	dB(A)
27	427631.45	5410131.47	379.00	0	D	32	68.0	0.0	-188.0	0.0	0.0	81.1	0.1	-5.8	0.0	0.0	4.8	0.0	0.0	-200.2
27	427631.45	5410131.47	379.00	0	D	63	84.6	0.0	-188.0	0.0	0.0	81.1	0.4	-5.8	0.0	0.0	4.8	0.0	0.0	-183.9
27	427631.45	5410131.47	379.00	0	D	125	98.8	0.0	-188.0	0.0	0.0	81.1	1.3	1.1	0.0	0.0	3.7	0.0	0.0	-176.3
27	427631.45	5410131.47	379.00	0	D	250	105.0	0.0	-188.0	0.0	0.0	81.1	3.3	-1.3	0.0	0.0	4.8	0.0	0.0	-170.8
27	427631.45	5410131.47	379.00	0	D	500	110.2	0.0	-188.0	0.0	0.0	81.1	6.1	-2.7	0.0	0.0	4.8	0.0	0.0	-167.1
27	427631.45	5410131.47	379.00	0	D	1000	110.4	0.0	-188.0	0.0	0.0	81.1	11.6	-2.7	0.0	0.0	4.8	0.0	0.0	-172.4
27	427631.45	5410131.47	379.00	0	D	2000	108.3	0.0	-188.0	0.0	0.0	81.1	30.8	-2.7	0.0	0.0	4.8	0.0	0.0	-193.6
27	427631.45	5410131.47	379.00	0	D	4000	99.9	0.0	-188.0	0.0	0.0	81.1	104.4	-2.7	0.0	0.0	4.8	0.0	0.0	-275.6

Point Source, ISO 9613, Name: "TD08N", ID: ""																				
Nr.	X	Y	Z	Refl.	DEN	Freq.	Lw	l/a	Optime	K0	Dc	Adiv	Aatm	Agr	Afol	Ahous	Abar	Cmet	RL	Lr
	(m)	(m)	(m)			(Hz)	dB(A)	dB	dB	(dB)	(dB)	(dB)	(dB)	(dB)	(dB)	(dB)	(dB)	(dB)	(dB)	dB(A)
27	427631.45	5410131.47	379.00	0	D	8000	91.3	0.0	-188.0	0.0	0.0	81.1	372.2	-2.7	0.0	0.0	4.8	0.0	0.0	-552.0
27	427631.45	5410131.47	379.00	0	N	32	68.0	0.0	0.0	0.0	0.0	81.1	0.1	-5.8	0.0	0.0	4.8	0.0	0.0	-12.2
27	427631.45	5410131.47	379.00	0	N	63	84.6	0.0	0.0	0.0	0.0	81.1	0.4	-5.8	0.0	0.0	4.8	0.0	0.0	4.1
27	427631.45	5410131.47	379.00	0	N	125	98.8	0.0	0.0	0.0	0.0	81.1	1.3	1.1	0.0	0.0	3.7	0.0	0.0	11.7
27	427631.45	5410131.47	379.00	0	N	250	105.0	0.0	0.0	0.0	0.0	81.1	3.3	-1.3	0.0	0.0	4.8	0.0	0.0	17.2
27	427631.45	5410131.47	379.00	0	N	500	110.2	0.0	0.0	0.0	0.0	81.1	6.1	-2.7	0.0	0.0	4.8	0.0	0.0	20.9
27	427631.45	5410131.47	379.00	0	N	1000	110.4	0.0	0.0	0.0	0.0	81.1	11.6	-2.7	0.0	0.0	4.8	0.0	0.0	15.6
27	427631.45	5410131.47	379.00	0	N	2000	108.3	0.0	0.0	0.0	0.0	81.1	30.8	-2.7	0.0	0.0	4.8	0.0	0.0	-5.6
27	427631.45	5410131.47	379.00	0	N	4000	99.9	0.0	0.0	0.0	0.0	81.1	104.4	-2.7	0.0	0.0	4.8	0.0	0.0	-87.6
27	427631.45	5410131.47	379.00	0	N	8000	91.3	0.0	0.0	0.0	0.0	81.1	372.2	-2.7	0.0	0.0	4.8	0.0	0.0	-364.0
27	427631.45	5410131.47	379.00	0	E	32	68.0	0.0	0.0	0.0	0.0	81.1	0.1	-5.8	0.0	0.0	4.8	0.0	0.0	-12.2
27	427631.45	5410131.47	379.00	0	E	63	84.6	0.0	0.0	0.0	0.0	81.1	0.4	-5.8	0.0	0.0	4.8	0.0	0.0	4.1
27	427631.45	5410131.47	379.00	0	E	125	98.8	0.0	0.0	0.0	0.0	81.1	1.3	1.1	0.0	0.0	3.7	0.0	0.0	11.7
27	427631.45	5410131.47	379.00	0	E	250	105.0	0.0	0.0	0.0	0.0	81.1	3.3	-1.3	0.0	0.0	4.8	0.0	0.0	17.2
27	427631.45	5410131.47	379.00	0	E	500	110.2	0.0	0.0	0.0	0.0	81.1	6.1	-2.7	0.0	0.0	4.8	0.0	0.0	20.9
27	427631.45	5410131.47	379.00	0	E	1000	110.4	0.0	0.0	0.0	0.0	81.1	11.6	-2.7	0.0	0.0	4.8	0.0	0.0	15.6
27	427631.45	5410131.47	379.00	0	E	2000	108.3	0.0	0.0	0.0	0.0	81.1	30.8	-2.7	0.0	0.0	4.8	0.0	0.0	-5.6
27	427631.45	5410131.47	379.00	0	E	4000	99.9	0.0	0.0	0.0	0.0	81.1	104.4	-2.7	0.0	0.0	4.8	0.0	0.0	-87.6
27	427631.45	5410131.47	379.00	0	E	8000	91.3	0.0	0.0	0.0	0.0	81.1	372.2	-2.7	0.0	0.0	4.8	0.0	0.0	-364.0

Point Source, ISO 9613, Name: "EO_PC", ID: ""																				
Nr.	X	Y	Z	Refl.	DEN	Freq.	Lw	l/a	Optime	K0	Dc	Adiv	Aatm	Agr	Afol	Ahous	Abar	Cmet	RL	Lr
	(m)	(m)	(m)			(Hz)	dB(A)	dB	dB	(dB)	(dB)	(dB)	(dB)	(dB)	(dB)	(dB)	(dB)	(dB)	(dB)	dB(A)
28	427748.07	5409524.18	390.00	0	D	32	80.8	0.0	0.0	0.0	0.0	79.3	0.1	-5.7	0.0	0.0	0.0	0.0	0.0	7.2
28	427748.07	5409524.18	390.00	0	D	63	96.4	0.0	0.0	0.0	0.0	79.3	0.3	-5.7	0.0	0.0	0.0	0.0	0.0	22.6
28	427748.07	5409524.18	390.00	0	D	125	103.3	0.0	0.0	0.0	0.0	79.3	1.1	1.9	0.0	0.0	0.0	0.0	0.0	21.1
28	427748.07	5409524.18	390.00	0	D	250	106.0	0.0	0.0	0.0	0.0	79.3	2.7	-0.6	0.0	0.0	0.0	0.0	0.0	24.6
28	427748.07	5409524.18	390.00	0	D	500	111.8	0.0	0.0	0.0	0.0	79.3	5.0	-1.9	0.0	0.0	0.0	0.0	0.0	29.5
28	427748.07	5409524.18	390.00	0	D	1000	111.8	0.0	0.0	0.0	0.0	79.3	9.5	-1.9	0.0	0.0	0.0	0.0	0.0	25.0
28	427748.07	5409524.18	390.00	0	D	2000	111.7	0.0	0.0	0.0	0.0	79.3	25.0	-1.9	0.0	0.0	0.0	0.0	0.0	9.4
28	427748.07	5409524.18	390.00	0	D	4000	106.9	0.0	0.0	0.0	0.0	79.3	84.9	-1.9	0.0	0.0	0.0	0.0	0.0	-55.3
28	427748.07	5409524.18	390.00	0	D	8000	83.5	0.0	0.0	0.0	0.0	79.3	302.7	-1.9	0.0	0.0	0.0	0.0	0.0	-296.5
28	427748.07	5409524.18	390.00	0	N	32	80.8	0.0	-188.0	0.0	0.0	79.3	0.1	-5.7	0.0	0.0	0.0	0.0	0.0	-180.8
28	427748.07	5409524.18	390.00	0	N	63	96.4	0.0	-188.0	0.0	0.0	79.3	0.3	-5.7	0.0	0.0	0.0	0.0	0.0	-165.4
28	427748.07	5409524.18	390.00	0	N	125	103.3	0.0	-188.0	0.0	0.0	79.3	1.1	1.9	0.0	0.0	0.0	0.0	0.0	-166.9
28	427748.07	5409524.18	390.00	0	N	250	106.0	0.0	-188.0	0.0	0.0	79.3	2.7	-0.6	0.0	0.0	0.0	0.0	0.0	-163.4
28	427748.07	5409524.18	390.00	0	N	500	111.8	0.0	-188.0	0.0	0.0	79.3	5.0	-1.9	0.0	0.0	0.0	0.0	0.0	-158.5
28	427748.07	5409524.18	390.00	0	N	1000	111.8	0.0	-188.0	0.0	0.0	79.3	9.5	-1.9	0.0	0.0	0.0	0.0	0.0	-163.0
28	427748.07	5409524.18	390.00	0	N	2000	111.7	0.0	-188.0	0.0	0.0	79.3	25.0	-1.9	0.0	0.0	0.0	0.0	0.0	-178.6
28	427748.07	5409524.18	390.00	0	N	4000	106.9	0.0	-188.0	0.0	0.0	79.3	84.9	-1.9	0.0	0.0	0.0	0.0	0.0	-243.3
28	427748.07	5409524.18	390.00	0	N	8000	83.5	0.0	-188.0	0.0	0.0	79.3	302.7	-1.9	0.0	0.0	0.0	0.0	0.0	-484.5
28	427748.07	5409524.18	390.00	0	E	32	80.8	0.0	-188.0	0.0	0.0	79.3	0.1	-5.7	0.0	0.0	0.0	0.0	0.0	-180.8
28	427748.07	5409524.18	390.00	0	E	63	96.4	0.0	-188.0	0.0	0.0	79.3	0.3	-5.7	0.0	0.0	0.0	0.0	0.0	-165.4
28	427748.07	5409524.18	390.00	0	E	125	103.3	0.0	-188.0	0.0	0.0	79.3	1.1	1.9	0.0	0.0	0.0	0.0	0.0	-166.9
28	427748.07	5409524.18	390.00	0	E	250	106.0	0.0	-188.0	0.0	0.0	79.3	2.7	-0.6	0.0	0.0	0.0	0.0	0.0	-163.4
28	427748.07	5409524.18	390.00	0	E	500	111.8	0.0	-188.0	0.0	0.0	79.3	5.0	-1.9	0.0	0.0	0.0	0.0	0.0	-158.5
28	427748.07	5409524.18	390.00	0	E	1000	111.8	0.0	-188.0	0.0	0.0	79.3	9.5	-1.9	0.0	0.0	0.0	0.0	0.0	-163.0
28	427748.07	5409524.18	390.00	0	E	2000	111.7	0.0	-188.0	0.0	0.0	79.3	25.0	-1.9	0.0	0.0	0.0	0.0	0.0	-178.6
28	427748.07	5409524.18	390.00	0	E	4000	106.9	0.0	-188.0	0.0	0.0	79.3	84.9	-1.9	0.0	0.0	0.0	0.0	0.0	-243.3
28	427748.07	5409524.18	390.00	0	E	8000	83.5	0.0	-188.0	0.0	0.0	79.3	302.7	-1.9	0.0	0.0	0.0	0.0	0.0	-484.5

Point Source, ISO 9613, Name: "WL2", ID: ""																				
Nr.	X	Y	Z	Refl.	DEN	Freq.	Lw	l/a	Optime	K0	Dc	Adiv	Aatm	Agr	Afol	Ahous	Abar	Cmet	RL	Lr
	(m)	(m)	(m)			(Hz)	dB(A)	dB	dB	(dB)	(dB)	(dB)	(dB)	(dB)	(dB)	(dB)	(dB)	(dB)	(dB)	dB(A)
29	425433.86	5409625.27	184.00	0	DEN	63	87.8	0.0	0.0	0.0	0.0	81.5	0.4	-5.8	0.0	0.0	20.0	0.0	0.0	-8.3
29	425433.86	5409625.27	184.00	0	DEN	125	104.9	0.0	0.0	0.0	0.0	81.5	1.4	1.9	0.0	0.0	18.1	0.0	0.0	2.0
29	425433.86	5409625.27	184.00	0	DEN	250	99.4	0.0	0.0	0.0	0.0	81.5	3.5	-0.5	0.0	0.0	20.0	0.0	0.0	-5.1
29	425433.86	5409625.27	184.00	0	DEN	500	106.8	0.0	0.0	0.0	0.0	81.5	6.5	-1.9	0.0	0.0	20.0	0.0	0.0	0.7
29	425433.86	5409625.27	184.00	0	DEN	1000	109.0	0.0	0.0	0.0	0.0	81.5	12.3	-1.9	0.0	0.0	20.0	0.0	0.0	-2.9
29	425433.86	5409625.27	184.00	0	DEN	2000	106.2	0.0	0.0	0.0	0.0	81.5	32.4	-1.9	0.0	0.0	20.0	0.0	0.0	-25.8
29	425433.86	5409625.27	184.00	0	DEN	4000	97.0	0.0	0.0	0.0	0.0	81.5	109.9	-1.9	0.0	0.0	20.0	0.0	0.0	-112.5
29	425433.86	5409625.27	184.00	0	DEN	8000	57.9	0.0	0.0	0.0	0.0	81.5	391.9	-1.9	0.0	0.0	20.0	0.0	0.0	-433.7

Point Source, ISO 9613, Name: "E5", ID: ""																				
Nr.	X	Y	Z	Refl.	DEN	Freq.	Lw	l/a	Optime	K0	Dc	Adiv	Aatm	Agr	Afol	Ahous	Abar	Cmet	RL	Lr
	(m)	(m)	(m)			(Hz)	dB(A)	dB	dB	(dB)	(dB)	(dB)	(dB)	(dB)	(dB)	(dB)	(dB)	(dB)	(dB)	dB(A)
30	425594.55	5409554.60	197.47	0	DEN	32	69.2	0.0	0.0	0.0	0.0	81.1	0.1	-5.8	0.0	0.0	21.1	0.0	0.0	-27.4
30	425594.55	5409554.60	197.47	0	DEN	63	89.6	0.0	0.0	0.0	0.0	81.1	0.4	-5.8	0.0	0.0	25.0	0.0	0.0	-11.1
30	425594.55	5409554.60	197.47	0	DEN	125	99.3	0.0	0.0	0.0	0.0	81.1	1.3	2.0	0.0	0.0	23.0	0.0	0.0	-8.1
30	425594.55	5409554.60	197.47	0	DEN	250	98.6	0.0	0.0	0.0	0.0	81.1	3.3	-0.4	0.0	0.0	25.0	0.0	0.0	-10.4
30	425594.55	5409554.60	197.47	0	DEN	500	108.5	0.0	0.0	0.0	0.0	81.1	6.2	-1.8	0.0	0.0	25.0	0.0	0.0	-2.0
30	425594.55	5409554.60	197.47	0	DEN	1000	107.1	0.0	0.0	0.0	0.0	81.1	11.7	-1.8	0.0	0.0	25.0	0.0	0.0	-8.9
30	425594.55	5409554.60	197.47	0	DEN	2000	105.0	0.0	0.0	0.0	0.0	81.1	30.9	-1.8	0.0	0.0	25.0	0.0	0.0	-30.2
30	425594.55	5409554.60	197.47	0	DEN	4000	99.7	0.0	0.0	0.0	0.0	81.1	104.9	-1.8	0.0	0.0	25.0	0.0	0.0	-109.5
30	425594.55	5409554.60	197.47	0	DEN	8000	91.7	0.0	0.0	0.0	0.0	81.1	374.1	-1.8	0.0	0.0	25.0	0.0	0.0	-386.7

Point Source, ISO 9613, Name: "TD12D", ID: ""																				
Nr.	X	Y	Z	Refl.	DEN	Freq.	Lw	l/a	Optime	K0	Dc	Adiv	Aatm	Agr	Afol	Ahous	Abar	Cmet	RL	Lr
	(m)	(m)	(m)			(Hz)	dB(A)	dB	dB	(dB)	(dB)	(dB)	(dB)	(dB)	(dB)	(dB)	(dB)	(dB)	(dB)	dB(A)
31	425044.71	5410766.17	364.00	0	D	32	76.1	0.0	0.0	0.0	0.0	84.1	0.1	-5.8	0.0	0.0	0.0	0.0	0.0	-2.3
31	425044.71	5410766.17	364.00	0	D	63	89.7	0.0	0.0	0.0	0.0	84.1	0.5	-5.8	0.0	0.0	0.0	0.0	0.0	10.9
31	425044.71	5410766.17	364.00	0	D	125	103.2	0.0	0.0	0.0	0.0	84.1	1.9	1.2	0.0	0.0	0.0	0.0	0.0	16.1
31	425044.71	5410766.17	364.00	0	D	250	109.5	0.0	0.0	0.0	0.0	84.1	4.7	-1.3	0.0	0.0	0.0	0.0	0.0	22.0
31	425044.71	5410766.17	364.00	0	D	500	117.4	0.0	0.0	0.0	0.0	84.1	8.7	-2.6	0.0	0.0	0.0	0.0	0.0	27.3
31	425044.71	5410766.17	364.00	0	D	1000	114.9	0.0	0.0	0.0	0.0	84.1	16.5	-2.6	0.0	0.0	0.0	0.0	0.0	17.0
31	425044.71	5410766.17	364.00	0	D	2000	113.8	0.0	0.0	0.0	0.0	84.1	43.6	-2.6	0.0	0.0	0.0	0.0	0.0	-11.2
31	425044.71	5410766.17	364.00	0	D	4000	111.7	0.0	0.0	0.0	0.0	84.1	147.8	-2.6	0.0	0.0	0.0	0.0	0.0	-117.5
31	425044.71	5410766.17	364.00	0	D	8000	104.1	0.0	0.0	0.0	0.0	84.1	527.0	-2.6	0.0	0.0	0.0	0.0	0.0	-504.4
31	425044.71	5410766.17	364.00	0	N	32	76.1	0.0	-188.0	0.0	0.0	84.1	0.1	-5.8	0.0	0.0	0.0	0.0	0.0	-190.3
31	425044.71	5410766.17	364.00	0	N	63	89.7	0.0	-188.0	0.0	0.0	84.1	0.5	-5.8	0.0	0.0	0.0	0.0	0.0	-177.1
31	425044.71	5410766.17	364.00	0	N	125	103.2	0.0	-188.0	0.0	0.0	84.1	1.9	1.2	0.0	0.0	0.0	0.0	0.0	-171.9
31	425044.71	5410766.17	364.00	0	N	250	109.5	0.0	-188.0	0.0	0.0	84.1	4.7	-1.3	0.0	0.0	0.0	0.0	0.0	-166.0
31	425044.71	5410766.17	364.00	0	N	500	117.4	0.0	-188.0	0.0	0.0	84.1	8.7	-2.6	0.0	0.0	0.0	0.0	0.0	-160.7
31	425044.71	5410766.17	364.00	0	N	1000	114.9	0.0	-188.0	0.0	0.0	84.1	16.5	-2.6	0.0	0.0	0.0	0.0	0.0	-171.0
31	425044.71	5410766.17	364.00	0	N	2000	113.8	0.0	-188.0	0.0	0.0	84.1	43.6	-2.6	0.0	0.0	0.0	0.0	0.0	-199.2
31	425044.71	5410766.17	364.00	0	N	4000	111.7	0.0	-188.0	0.0	0.0	84.1	147.8	-2.6	0.0	0.0	0.0	0.0	0.0	-305.5
31	425044.71	5410766.17	364.00	0	N	8000	104.1	0.0	-188.0	0.0	0.0	84.1	527.0	-2.6	0.0	0.0	0.0	0.0	0.0	-692.4
31	425044.71	5410766.17	364.00	0	E	32	76.1	0.0	-188.0	0.0	0.0	84.1	0.1	-5.8	0.0	0.0	0.0	0.0	0.0	-190.3
31	425044.71	5410766.17	364.00	0	E	63	89.7	0.0	-188.0	0.0	0.0	84.1	0.5	-5.8	0.0	0.0	0.0	0.0	0.0	-177.1
31	425044.71	5410766.17	364.00	0	E	125	103.2	0.0	-188.0	0.0	0.0	84.1	1.9	1.2	0.0	0.0	0.0	0.0	0.0	-171.9
31	425044.71	5410766.17	364.00	0	E	250	109.5	0.0	-188.0	0.0	0.0	84.1	4.7	-1.3	0.0	0.0	0.0	0.0	0.0	-166.0
31	425044.71	5410766.17	364.00	0	E	500	117.4	0.0	-188.0	0.0	0.0	84.1	8.7	-2.6	0.0	0.0	0.0	0.0	0.0	-160.7
31	425044.71	5410766.17	364.00	0	E	1000	114.9	0.0	-188.0	0.0	0.0	84.1	16.5	-2.6	0.0	0.0	0.0	0.0	0.0	-171.0
31	425044.71	5410766.17	364.00	0	E	2000	113.8	0.0	-188.0	0.0	0.0	84.1	43.6	-2.6	0.0	0.0	0.0	0.0	0.0	-199.2
31	425044.71	5410766.17	364.00	0	E	4000	111.7	0.0	-188.0	0.0	0.0	84.1	147.8	-2.6	0.0	0.0	0.0	0.0	0.0	-305.5
31	425044.71	5410766.17	364.00	0	E	8000	104.1	0.0	-188.0	0.0	0.0	84.1	527.0	-2.6	0.0	0.0	0.0	0.0	0.0	-692.4

Point Source, ISO 9613, Name: "TD09", ID: ""																				
Nr.	X	Y	Z	Refl.	DEN	Freq.	Lw	l/a	Optime	K0	Dc	Adiv	Aatm	Agr	Afol	Ahous	Abar	Cmet	RL	Lr
	(m)	(m)	(m)			(Hz)	dB(A)	dB	dB	(dB)	(dB)	(dB)	(dB)	(dB)	(dB)	(dB)	(dB)	(dB)	(dB)	dB(A)
32	427330.78	5409496.39	400.00	0	DEN	32	60.4	0.0	0.0	0.0	0.0	79.1	0.1	-5.7	0.0	0.0	0.0	0.0	0.0	-13.1
32	427330.78	5409496.39	400.00	0	DEN	63	76.8	0.0	0.0	0.0	0.0	79.1	0.3	-5.7	0.0	0.0	0.0	0.0	0.0	3.1
32	427330.78	5409496.39	400.00	0	DEN	125	90.3	0.0	0.0	0.0	0.0	79.1	1.0	1.4	0.0	0.0	0.0	0.0	0.0	8.7
32	427330.78	5409496.39	400.00	0	DEN	250	98.5	0.0	0.0	0.0	0.0	79.1	2.7	-1.0	0.0	0.0	0.0	0.0	0.0	17.7
32	427330.78	5409496.39	400.00	0	DEN	500	102.8	0.0	0.0	0.0	0.0	79.1	4.9	-2.4	0.0	0.0	0.0	0.0	0.0	21.2
32	427330.78	5409496.39	400.00	0	DEN	1000	104.6	0.0	0.0	0.0	0.0	79.1	9.3	-2.4	0.0	0.0	0.0	0.0	0.0	18.6
32	427330.78	5409496.39	400.00	0	DEN	2000	105.1	0.0	0.0	0.0	0.0	79.1	24.6	-2.4	0.0	0.0	0.0	0.0	0.0	3.8
32	427330.78	5409496.39	400.00	0	DEN	4000	101.2	0.0	0.0	0.0	0.0	79.1	83.5	-2.4	0.0	0.0	0.0	0.0	0.0	-59.0
32	427330.78	5409496.39	400.00	0	DEN	8000	92.1	0.0	0.0	0.0	0.0	79.1	297.7	-2.4	0.0	0.0	0.0	0.0	0.0	-282.4

Point Source, ISO 9613, Name: "TD06", ID: ""																				
Nr.	X	Y	Z	Refl.	DEN	Freq.	Lw	l/a	Optime	K0	Dc	Adiv	Aatm	Agr	Afol	Ahous	Abar	Cmet	RL	Lr
	(m)	(m)	(m)			(Hz)	dB(A)	dB	dB	(dB)	(dB)	(dB)	(dB)	(dB)	(dB)	(dB)	(dB)	(dB)	(dB)	dB(A)
33	428579.99	5409053.54	400.00	0	DEN	32	63.7	0.0	0.0	0.0	0.0	78.6	0.1	-5.7	0.0	0.0	0.0	0.0	0.0	-9.3
33	428579.99	5409053.54	400.00	0	DEN	63	84.2	0.0	0.0	0.0	0.0	78.6	0.3	-5.7	0.0	0.0	0.0	0.0	0.0	11.0
33	428579.99	5409053.54	400.00	0	DEN	125	91.6	0.0	0.0	0.0	0.0	78.6	1.0	1.7	0.0	0.0	0.0	0.0	0.0	10.4
33	428579.99	5409053.54	400.00	0	DEN	250	99.2	0.0	0.0	0.0	0.0	78.6	2.5	-0.7	0.0	0.0	0.0	0.0	0.0	18.9
33	428579.99	5409053.54	400.00	0	DEN	500	103.1	0.0	0.0	0.0	0.0	78.6	4.6	-2.1	0.0	0.0	0.0	0.0	0.0	22.1
33	428579.99	5409053.54	400.00	0	DEN	1000	103.3	0.0	0.0	0.0	0.0	78.6	8.7	-2.1	0.0	0.0	0.0	0.0	0.0	18.1

Point Source, ISO 9613, Name: "TD06", ID: ""																				
Nr.	X	Y	Z	Refl.	DEN	Freq.	Lw	l/a	Optime	K0	Dc	Adiv	Aatm	Agr	Afol	Ahous	Abar	Cmet	RL	Lr
	(m)	(m)	(m)			(Hz)	dB(A)	dB	dB	(dB)	(dB)	(dB)	(dB)	(dB)	(dB)	(dB)	(dB)	(dB)	(dB)	dB(A)
33	428579.99	5409053.54	400.00	0	DEN	2000	104.8	0.0	0.0	0.0	0.0	78.6	23.1	-2.1	0.0	0.0	0.0	0.0	0.0	5.3
33	428579.99	5409053.54	400.00	0	DEN	4000	96.1	0.0	0.0	0.0	0.0	78.6	78.2	-2.1	0.0	0.0	0.0	0.0	0.0	-58.5
33	428579.99	5409053.54	400.00	0	DEN	8000	87.2	0.0	0.0	0.0	0.0	78.6	278.9	-2.1	0.0	0.0	0.0	0.0	0.0	-268.2

Point Source, ISO 9613, Name: "TD12N", ID: ""																				
Nr.	X	Y	Z	Refl.	DEN	Freq.	Lw	l/a	Optime	K0	Dc	Adiv	Aatm	Agr	Afol	Ahous	Abar	Cmet	RL	Lr
	(m)	(m)	(m)			(Hz)	dB(A)	dB	dB	(dB)	(dB)	(dB)	(dB)	(dB)	(dB)	(dB)	(dB)	(dB)	(dB)	dB(A)
34	425044.71	5410766.17	364.00	0	D	32	68.0	0.0	-188.0	0.0	0.0	84.1	0.1	-5.8	0.0	0.0	0.0	0.0	0.0	-198.4
34	425044.71	5410766.17	364.00	0	D	63	84.6	0.0	-188.0	0.0	0.0	84.1	0.5	-5.8	0.0	0.0	0.0	0.0	0.0	-182.2
34	425044.71	5410766.17	364.00	0	D	125	98.8	0.0	-188.0	0.0	0.0	84.1	1.9	1.2	0.0	0.0	0.0	0.0	0.0	-176.3
34	425044.71	5410766.17	364.00	0	D	250	105.0	0.0	-188.0	0.0	0.0	84.1	4.7	-1.3	0.0	0.0	0.0	0.0	0.0	-170.5
34	425044.71	5410766.17	364.00	0	D	500	110.2	0.0	-188.0	0.0	0.0	84.1	8.7	-2.6	0.0	0.0	0.0	0.0	0.0	-167.9
34	425044.71	5410766.17	364.00	0	D	1000	110.4	0.0	-188.0	0.0	0.0	84.1	16.5	-2.6	0.0	0.0	0.0	0.0	0.0	-175.5
34	425044.71	5410766.17	364.00	0	D	2000	108.3	0.0	-188.0	0.0	0.0	84.1	43.6	-2.6	0.0	0.0	0.0	0.0	0.0	-204.7
34	425044.71	5410766.17	364.00	0	D	4000	99.9	0.0	-188.0	0.0	0.0	84.1	147.8	-2.6	0.0	0.0	0.0	0.0	0.0	-317.3
34	425044.71	5410766.17	364.00	0	D	8000	91.3	0.0	-188.0	0.0	0.0	84.1	527.0	-2.6	0.0	0.0	0.0	0.0	0.0	-705.2
34	425044.71	5410766.17	364.00	0	N	32	68.0	0.0	0.0	0.0	0.0	84.1	0.1	-5.8	0.0	0.0	0.0	0.0	0.0	-10.4
34	425044.71	5410766.17	364.00	0	N	63	84.6	0.0	0.0	0.0	0.0	84.1	0.5	-5.8	0.0	0.0	0.0	0.0	0.0	5.8
34	425044.71	5410766.17	364.00	0	N	125	98.8	0.0	0.0	0.0	0.0	84.1	1.9	1.2	0.0	0.0	0.0	0.0	0.0	11.7
34	425044.71	5410766.17	364.00	0	N	250	105.0	0.0	0.0	0.0	0.0	84.1	4.7	-1.3	0.0	0.0	0.0	0.0	0.0	17.5
34	425044.71	5410766.17	364.00	0	N	500	110.2	0.0	0.0	0.0	0.0	84.1	8.7	-2.6	0.0	0.0	0.0	0.0	0.0	20.1
34	425044.71	5410766.17	364.00	0	N	1000	110.4	0.0	0.0	0.0	0.0	84.1	16.5	-2.6	0.0	0.0	0.0	0.0	0.0	12.5
34	425044.71	5410766.17	364.00	0	N	2000	108.3	0.0	0.0	0.0	0.0	84.1	43.6	-2.6	0.0	0.0	0.0	0.0	0.0	-16.7
34	425044.71	5410766.17	364.00	0	N	4000	99.9	0.0	0.0	0.0	0.0	84.1	147.8	-2.6	0.0	0.0	0.0	0.0	0.0	-129.3
34	425044.71	5410766.17	364.00	0	N	8000	91.3	0.0	0.0	0.0	0.0	84.1	527.0	-2.6	0.0	0.0	0.0	0.0	0.0	-517.2
34	425044.71	5410766.17	364.00	0	E	32	68.0	0.0	0.0	0.0	0.0	84.1	0.1	-5.8	0.0	0.0	0.0	0.0	0.0	-10.4
34	425044.71	5410766.17	364.00	0	E	63	84.6	0.0	0.0	0.0	0.0	84.1	0.5	-5.8	0.0	0.0	0.0	0.0	0.0	5.8
34	425044.71	5410766.17	364.00	0	E	125	98.8	0.0	0.0	0.0	0.0	84.1	1.9	1.2	0.0	0.0	0.0	0.0	0.0	11.7
34	425044.71	5410766.17	364.00	0	E	250	105.0	0.0	0.0	0.0	0.0	84.1	4.7	-1.3	0.0	0.0	0.0	0.0	0.0	17.5
34	425044.71	5410766.17	364.00	0	E	500	110.2	0.0	0.0	0.0	0.0	84.1	8.7	-2.6	0.0	0.0	0.0	0.0	0.0	20.1
34	425044.71	5410766.17	364.00	0	E	1000	110.4	0.0	0.0	0.0	0.0	84.1	16.5	-2.6	0.0	0.0	0.0	0.0	0.0	12.5
34	425044.71	5410766.17	364.00	0	E	2000	108.3	0.0	0.0	0.0	0.0	84.1	43.6	-2.6	0.0	0.0	0.0	0.0	0.0	-16.7
34	425044.71	5410766.17	364.00	0	E	4000	99.9	0.0	0.0	0.0	0.0	84.1	147.8	-2.6	0.0	0.0	0.0	0.0	0.0	-129.3
34	425044.71	5410766.17	364.00	0	E	8000	91.3	0.0	0.0	0.0	0.0	84.1	527.0	-2.6	0.0	0.0	0.0	0.0	0.0	-517.2

Point Source, ISO 9613, Name: "E7", ID: ""																				
Nr.	X	Y	Z	Refl.	DEN	Freq.	Lw	l/a	Optime	K0	Dc	Adiv	Aatm	Agr	Afol	Ahous	Abar	Cmet	RL	Lr
	(m)	(m)	(m)			(Hz)	dB(A)	dB	dB	(dB)	(dB)	(dB)	(dB)	(dB)	(dB)	(dB)	(dB)	(dB)	(dB)	dB(A)
35	423590.37	5411533.29	364.00	0	DEN	32	73.7	0.0	0.0	0.0	0.0	86.5	0.2	-5.9	0.0	0.0	0.0	0.0	0.0	-7.2
35	423590.37	5411533.29	364.00	0	DEN	63	89.2	0.0	0.0	0.0	0.0	86.5	0.7	-5.9	0.0	0.0	0.0	0.0	0.0	7.8
35	423590.37	5411533.29	364.00	0	DEN	125	100.9	0.0	0.0	0.0	0.0	86.5	2.5	0.9	0.0	0.0	0.0	0.0	0.0	11.0
35	423590.37	5411533.29	364.00	0	DEN	250	108.4	0.0	0.0	0.0	0.0	86.5	6.3	-1.6	0.0	0.0	0.0	0.0	0.0	17.2
35	423590.37	5411533.29	364.00	0	DEN	500	110.1	0.0	0.0	0.0	0.0	86.5	11.5	-2.9	0.0	0.0	0.0	0.0	0.0	14.9
35	423590.37	5411533.29	364.00	0	DEN	1000	111.9	0.0	0.0	0.0	0.0	86.5	21.9	-2.9	0.0	0.0	0.0	0.0	0.0	6.4
35	423590.37	5411533.29	364.00	0	DEN	2000	109.3	0.0	0.0	0.0	0.0	86.5	57.9	-2.9	0.0	0.0	0.0	0.0	0.0	-32.2
35	423590.37	5411533.29	364.00	0	DEN	4000	100.0	0.0	0.0	0.0	0.0	86.5	196.3	-2.9	0.0	0.0	0.0	0.0	0.0	-179.9
35	423590.37	5411533.29	364.00	0	DEN	8000	92.1	0.0	0.0	0.0	0.0	86.5	700.2	-2.9	0.0	0.0	0.0	0.0	0.0	-691.7

Point Source, ISO 9613, Name: "TD07N", ID: ""																				
Nr.	X	Y	Z	Refl.	DEN	Freq.	Lw	l/a	Optime	K0	Dc	Adiv	Aatm	Agr	Afol	Ahous	Abar	Cmet	RL	Lr
	(m)	(m)	(m)			(Hz)	dB(A)	dB	dB	(dB)	(dB)	(dB)	(dB)	(dB)	(dB)	(dB)	(dB)	(dB)	(dB)	dB(A)
36	427567.41	5410169.48	379.00	0	D	32	68.0	0.0	-188.0	0.0	0.0	81.2	0.1	-5.8	0.0	0.0	4.8	0.0	0.0	-200.3
36	427567.41	5410169.48	379.00	0	D	63	84.6	0.0	-188.0	0.0	0.0	81.2	0.4	-5.8	0.0	0.0	4.8	0.0	0.0	-184.0
36	427567.41	5410169.48	379.00	0	D	125	98.8	0.0	-188.0	0.0	0.0	81.2	1.3	1.1	0.0	0.0	3.7	0.0	0.0	-176.5
36	427567.41	5410169.48	379.00	0	D	250	105.0	0.0	-188.0	0.0	0.0	81.2	3.4	-1.4	0.0	0.0	4.8	0.0	0.0	-170.9
36	427567.41	5410169.48	379.00	0	D	500	110.2	0.0	-188.0	0.0	0.0	81.2	6.2	-2.8	0.0	0.0	4.8	0.0	0.0	-167.2
36	427567.41	5410169.48	379.00	0	D	1000	110.4	0.0	-188.0	0.0	0.0	81.2	11.8	-2.8	0.0	0.0	4.8	0.0	0.0	-172.5
36	427567.41	5410169.48	379.00	0	D	2000	108.3	0.0	-188.0	0.0	0.0	81.2	31.1	-2.8	0.0	0.0	4.8	0.0	0.0	-194.0
36	427567.41	5410169.48	379.00	0	D	4000	99.9	0.0	-188.0	0.0	0.0	81.2	105.5	-2.8	0.0	0.0	4.8	0.0	0.0	-276.8
36	427567.41	5410169.48	379.00	0	D	8000	91.3	0.0	-188.0	0.0	0.0	81.2	376.3	-2.8	0.0	0.0	4.8	0.0	0.0	-556.2
36	427567.41	5410169.48	379.00	0	N	32	68.0	0.0	0.0	0.0	0.0	81.2	0.1	-5.8	0.0	0.0	4.8	0.0	0.0	-12.3
36	427567.41	5410169.48	379.00	0	N	63	84.6	0.0	0.0	0.0	0.0	81.2	0.4	-5.8	0.0	0.0	4.8	0.0	0.0	4.0
36	427567.41	5410169.48	379.00	0	N	125	98.8	0.0	0.0	0.0	0.0	81.2	1.3	1.1	0.0	0.0	3.7	0.0	0.0	11.5

Point Source, ISO 9613, Name: "TD07N", ID: ""																				
Nr.	X	Y	Z	Refl.	DEN	Freq.	Lw	l/a	Optime	K0	Dc	Adiv	Aatm	Agr	Afol	Ahous	Abar	Cmet	RL	Lr
	(m)	(m)	(m)			(Hz)	dB(A)	dB	dB	(dB)	(dB)	(dB)	(dB)	(dB)	(dB)	(dB)	(dB)	(dB)	(dB)	dB(A)
36	427567.41	5410169.48	379.00	0	N	250	105.0	0.0	0.0	0.0	0.0	81.2	3.4	-1.4	0.0	0.0	4.8	0.0	0.0	17.1
36	427567.41	5410169.48	379.00	0	N	500	110.2	0.0	0.0	0.0	0.0	81.2	6.2	-2.8	0.0	0.0	4.8	0.0	0.0	20.8
36	427567.41	5410169.48	379.00	0	N	1000	110.4	0.0	0.0	0.0	0.0	81.2	11.8	-2.8	0.0	0.0	4.8	0.0	0.0	15.5
36	427567.41	5410169.48	379.00	0	N	2000	108.3	0.0	0.0	0.0	0.0	81.2	31.1	-2.8	0.0	0.0	4.8	0.0	0.0	-6.0
36	427567.41	5410169.48	379.00	0	N	4000	99.9	0.0	0.0	0.0	0.0	81.2	105.5	-2.8	0.0	0.0	4.8	0.0	0.0	-88.8
36	427567.41	5410169.48	379.00	0	N	8000	91.3	0.0	0.0	0.0	0.0	81.2	376.3	-2.8	0.0	0.0	4.8	0.0	0.0	-368.2
36	427567.41	5410169.48	379.00	0	E	32	68.0	0.0	-188.0	0.0	0.0	81.2	0.1	-5.8	0.0	0.0	4.8	0.0	0.0	-200.3
36	427567.41	5410169.48	379.00	0	E	63	84.6	0.0	-188.0	0.0	0.0	81.2	0.4	-5.8	0.0	0.0	4.8	0.0	0.0	-184.0
36	427567.41	5410169.48	379.00	0	E	125	98.8	0.0	-188.0	0.0	0.0	81.2	1.3	1.1	0.0	0.0	3.7	0.0	0.0	-176.5
36	427567.41	5410169.48	379.00	0	E	250	105.0	0.0	-188.0	0.0	0.0	81.2	3.4	-1.4	0.0	0.0	4.8	0.0	0.0	-170.9
36	427567.41	5410169.48	379.00	0	E	500	110.2	0.0	-188.0	0.0	0.0	81.2	6.2	-2.8	0.0	0.0	4.8	0.0	0.0	-167.2
36	427567.41	5410169.48	379.00	0	E	1000	110.4	0.0	-188.0	0.0	0.0	81.2	11.8	-2.8	0.0	0.0	4.8	0.0	0.0	-172.5
36	427567.41	5410169.48	379.00	0	E	2000	108.3	0.0	-188.0	0.0	0.0	81.2	31.1	-2.8	0.0	0.0	4.8	0.0	0.0	-194.0
36	427567.41	5410169.48	379.00	0	E	4000	99.9	0.0	-188.0	0.0	0.0	81.2	105.5	-2.8	0.0	0.0	4.8	0.0	0.0	-276.8
36	427567.41	5410169.48	379.00	0	E	8000	91.3	0.0	-188.0	0.0	0.0	81.2	376.3	-2.8	0.0	0.0	4.8	0.0	0.0	-556.2

Point Source, ISO 9613, Name: "E9", ID: ""																				
Nr.	X	Y	Z	Refl.	DEN	Freq.	Lw	l/a	Optime	K0	Dc	Adiv	Aatm	Agr	Afol	Ahous	Abar	Cmet	RL	Lr
	(m)	(m)	(m)			(Hz)	dB(A)	dB	dB	(dB)	(dB)	(dB)	(dB)	(dB)	(dB)	(dB)	(dB)	(dB)	(dB)	dB(A)
37	423966.15	5411870.38	367.70	0	DEN	32	73.7	0.0	0.0	0.0	0.0	86.6	0.2	-5.9	0.0	0.0	4.8	0.0	0.0	-12.0
37	423966.15	5411870.38	367.70	0	DEN	63	89.2	0.0	0.0	0.0	0.0	86.6	0.7	-5.9	0.0	0.0	4.8	0.0	0.0	3.0
37	423966.15	5411870.38	367.70	0	DEN	125	100.9	0.0	0.0	0.0	0.0	86.6	2.5	0.9	0.0	0.0	3.9	0.0	0.0	7.0
37	423966.15	5411870.38	367.70	0	DEN	250	108.4	0.0	0.0	0.0	0.0	86.6	6.3	-1.6	0.0	0.0	4.8	0.0	0.0	12.3
37	423966.15	5411870.38	367.70	0	DEN	500	110.1	0.0	0.0	0.0	0.0	86.6	11.6	-3.0	0.0	0.0	4.8	0.0	0.0	10.1
37	423966.15	5411870.38	367.70	0	DEN	1000	111.9	0.0	0.0	0.0	0.0	86.6	22.0	-3.0	0.0	0.0	4.8	0.0	0.0	1.5
37	423966.15	5411870.38	367.70	0	DEN	2000	109.3	0.0	0.0	0.0	0.0	86.6	58.2	-3.0	0.0	0.0	4.8	0.0	0.0	-37.3
37	423966.15	5411870.38	367.70	0	DEN	4000	100.0	0.0	0.0	0.0	0.0	86.6	197.5	-3.0	0.0	0.0	4.8	0.0	0.0	-185.9
37	423966.15	5411870.38	367.70	0	DEN	8000	92.1	0.0	0.0	0.0	0.0	86.6	704.5	-3.0	0.0	0.0	4.8	0.0	0.0	-700.8

Point Source, ISO 9613, Name: "E18", ID: ""																				
Nr.	X	Y	Z	Refl.	DEN	Freq.	Lw	l/a	Optime	K0	Dc	Adiv	Aatm	Agr	Afol	Ahous	Abar	Cmet	RL	Lr
	(m)	(m)	(m)			(Hz)	dB(A)	dB	dB	(dB)	(dB)	(dB)	(dB)	(dB)	(dB)	(dB)	(dB)	(dB)	(dB)	dB(A)
38	426831.10	5409879.30	379.00	0	D	32	73.7	0.0	0.0	0.0	0.0	80.5	0.1	-5.7	0.0	0.0	0.0	0.0	0.0	-1.2
38	426831.10	5409879.30	379.00	0	D	63	89.2	0.0	0.0	0.0	0.0	80.5	0.4	-5.7	0.0	0.0	0.0	0.0	0.0	14.1
38	426831.10	5409879.30	379.00	0	D	125	100.9	0.0	0.0	0.0	0.0	80.5	1.2	1.6	0.0	0.0	0.0	0.0	0.0	17.6
38	426831.10	5409879.30	379.00	0	D	250	108.4	0.0	0.0	0.0	0.0	80.5	3.1	-0.9	0.0	0.0	0.0	0.0	0.0	25.6
38	426831.10	5409879.30	379.00	0	D	500	110.1	0.0	0.0	0.0	0.0	80.5	5.8	-2.3	0.0	0.0	0.0	0.0	0.0	26.1
38	426831.10	5409879.30	379.00	0	D	1000	111.9	0.0	0.0	0.0	0.0	80.5	10.9	-2.3	0.0	0.0	0.0	0.0	0.0	22.7
38	426831.10	5409879.30	379.00	0	D	2000	109.3	0.0	0.0	0.0	0.0	80.5	28.9	-2.3	0.0	0.0	0.0	0.0	0.0	2.1
38	426831.10	5409879.30	379.00	0	D	4000	100.0	0.0	0.0	0.0	0.0	80.5	98.0	-2.3	0.0	0.0	0.0	0.0	0.0	-76.3
38	426831.10	5409879.30	379.00	0	D	8000	92.1	0.0	0.0	0.0	0.0	80.5	349.7	-2.3	0.0	0.0	0.0	0.0	0.0	-335.9
38	426831.10	5409879.30	379.00	0	N	32	73.7	0.0	-188.0	0.0	0.0	80.5	0.1	-5.7	0.0	0.0	0.0	0.0	0.0	-189.2
38	426831.10	5409879.30	379.00	0	N	63	89.2	0.0	-188.0	0.0	0.0	80.5	0.4	-5.7	0.0	0.0	0.0	0.0	0.0	-173.9
38	426831.10	5409879.30	379.00	0	N	125	100.9	0.0	-188.0	0.0	0.0	80.5	1.2	1.6	0.0	0.0	0.0	0.0	0.0	-170.4
38	426831.10	5409879.30	379.00	0	N	250	108.4	0.0	-188.0	0.0	0.0	80.5	3.1	-0.9	0.0	0.0	0.0	0.0	0.0	-162.4
38	426831.10	5409879.30	379.00	0	N	500	110.1	0.0	-188.0	0.0	0.0	80.5	5.8	-2.3	0.0	0.0	0.0	0.0	0.0	-161.9
38	426831.10	5409879.30	379.00	0	N	1000	111.9	0.0	-188.0	0.0	0.0	80.5	10.9	-2.3	0.0	0.0	0.0	0.0	0.0	-165.3
38	426831.10	5409879.30	379.00	0	N	2000	109.3	0.0	-188.0	0.0	0.0	80.5	28.9	-2.3	0.0	0.0	0.0	0.0	0.0	-185.9
38	426831.10	5409879.30	379.00	0	N	4000	100.0	0.0	-188.0	0.0	0.0	80.5	98.0	-2.3	0.0	0.0	0.0	0.0	0.0	-264.3
38	426831.10	5409879.30	379.00	0	N	8000	92.1	0.0	-188.0	0.0	0.0	80.5	349.7	-2.3	0.0	0.0	0.0	0.0	0.0	-523.9
38	426831.10	5409879.30	379.00	0	E	32	73.7	0.0	-188.0	0.0	0.0	80.5	0.1	-5.7	0.0	0.0	0.0	0.0	0.0	-189.2
38	426831.10	5409879.30	379.00	0	E	63	89.2	0.0	-188.0	0.0	0.0	80.5	0.4	-5.7	0.0	0.0	0.0	0.0	0.0	-173.9
38	426831.10	5409879.30	379.00	0	E	125	100.9	0.0	-188.0	0.0	0.0	80.5	1.2	1.6	0.0	0.0	0.0	0.0	0.0	-170.4
38	426831.10	5409879.30	379.00	0	E	250	108.4	0.0	-188.0	0.0	0.0	80.5	3.1	-0.9	0.0	0.0	0.0	0.0	0.0	-162.4
38	426831.10	5409879.30	379.00	0	E	500	110.1	0.0	-188.0	0.0	0.0	80.5	5.8	-2.3	0.0	0.0	0.0	0.0	0.0	-161.9
38	426831.10	5409879.30	379.00	0	E	1000	111.9	0.0	-188.0	0.0	0.0	80.5	10.9	-2.3	0.0	0.0	0.0	0.0	0.0	-165.3
38	426831.10	5409879.30	379.00	0	E	2000	109.3	0.0	-188.0	0.0	0.0	80.5	28.9	-2.3	0.0	0.0	0.0	0.0	0.0	-185.9
38	426831.10	5409879.30	379.00	0	E	4000	100.0	0.0	-188.0	0.0	0.0	80.5	98.0	-2.3	0.0	0.0	0.0	0.0	0.0	-264.3
38	426831.10	5409879.30	379.00	0	E	8000	92.1	0.0	-188.0	0.0	0.0	80.5	349.7	-2.3	0.0	0.0	0.0	0.0	0.0	-523.9

Point Source, ISO 9613, Name: "TD11D", ID: ""																				
Nr.	X	Y	Z	Refl.	DEN	Freq.	Lw	l/a	Optime	K0	Dc	Adiv	Aatm	Agr	Afol	Ahous	Abar	Cmet	RL	Lr
	(m)	(m)	(m)			(Hz)	dB(A)	dB	dB	(dB)	(dB)	(dB)	(dB)	(dB)	(dB)	(dB)	(dB)	(dB)	(dB)	dB(A)
39	423578.88	5410651.33	364.00	0	D	32	76.1	0.0	0.0	0.0	0.0	85.6	0.2	-5.9	0.0	0.0	0.0	0.0	0.0	-3.8
39	423578.88	5410651.33	364.00	0	D	63	89.7	0.0	0.0	0.0	0.0	85.6	0.7	-5.9	0.0	0.0	0.0	0.0	0.0	9.3
39	423578.88	5410651.33	364.00	0	D	125	103.2	0.0	0.0	0.0	0.0	85.6	2.2	1.8	0.0	0.0	0.0	0.0	0.0	13.6
39	423578.88	5410651.33	364.00	0	D	250	109.5	0.0	0.0	0.0	0.0	85.6	5.6	-0.6	0.0	0.0	0.0	0.0	0.0	19.0
39	423578.88	5410651.33	364.00	0	D	500	117.4	0.0	0.0	0.0	0.0	85.6	10.3	-2.0	0.0	0.0	0.0	0.0	0.0	23.5
39	423578.88	5410651.33	364.00	0	D	1000	114.9	0.0	0.0	0.0	0.0	85.6	19.6	-2.0	0.0	0.0	0.0	0.0	0.0	11.7
39	423578.88	5410651.33	364.00	0	D	2000	113.8	0.0	0.0	0.0	0.0	85.6	51.7	-2.0	0.0	0.0	0.0	0.0	0.0	-21.5
39	423578.88	5410651.33	364.00	0	D	4000	111.7	0.0	0.0	0.0	0.0	85.6	175.5	-2.0	0.0	0.0	0.0	0.0	0.0	-147.3
39	423578.88	5410651.33	364.00	0	D	8000	104.1	0.0	0.0	0.0	0.0	85.6	625.8	-2.0	0.0	0.0	0.0	0.0	0.0	-605.3
39	423578.88	5410651.33	364.00	0	N	32	71.1	0.0	-188.0	0.0	0.0	85.6	0.2	-5.9	0.0	0.0	0.0	0.0	0.0	-196.8
39	423578.88	5410651.33	364.00	0	N	63	84.7	0.0	-188.0	0.0	0.0	85.6	0.7	-5.9	0.0	0.0	0.0	0.0	0.0	-183.7
39	423578.88	5410651.33	364.00	0	N	125	98.2	0.0	-188.0	0.0	0.0	85.6	2.2	1.8	0.0	0.0	0.0	0.0	0.0	-179.4
39	423578.88	5410651.33	364.00	0	N	250	104.5	0.0	-188.0	0.0	0.0	85.6	5.6	-0.6	0.0	0.0	0.0	0.0	0.0	-174.0
39	423578.88	5410651.33	364.00	0	N	500	112.4	0.0	-188.0	0.0	0.0	85.6	10.3	-2.0	0.0	0.0	0.0	0.0	0.0	-169.5
39	423578.88	5410651.33	364.00	0	N	1000	109.9	0.0	-188.0	0.0	0.0	85.6	19.6	-2.0	0.0	0.0	0.0	0.0	0.0	-181.3
39	423578.88	5410651.33	364.00	0	N	2000	108.8	0.0	-188.0	0.0	0.0	85.6	51.7	-2.0	0.0	0.0	0.0	0.0	0.0	-214.5
39	423578.88	5410651.33	364.00	0	N	4000	106.7	0.0	-188.0	0.0	0.0	85.6	175.5	-2.0	0.0	0.0	0.0	0.0	0.0	-340.3
39	423578.88	5410651.33	364.00	0	N	8000	99.1	0.0	-188.0	0.0	0.0	85.6	625.8	-2.0	0.0	0.0	0.0	0.0	0.0	-798.3
39	423578.88	5410651.33	364.00	0	E	32	71.1	0.0	-188.0	0.0	0.0	85.6	0.2	-5.9	0.0	0.0	0.0	0.0	0.0	-196.8
39	423578.88	5410651.33	364.00	0	E	63	84.7	0.0	-188.0	0.0	0.0	85.6	0.7	-5.9	0.0	0.0	0.0	0.0	0.0	-183.7
39	423578.88	5410651.33	364.00	0	E	125	98.2	0.0	-188.0	0.0	0.0	85.6	2.2	1.8	0.0	0.0	0.0	0.0	0.0	-179.4
39	423578.88	5410651.33	364.00	0	E	250	104.5	0.0	-188.0	0.0	0.0	85.6	5.6	-0.6	0.0	0.0	0.0	0.0	0.0	-174.0
39	423578.88	5410651.33	364.00	0	E	500	112.4	0.0	-188.0	0.0	0.0	85.6	10.3	-2.0	0.0	0.0	0.0	0.0	0.0	-169.5
39	423578.88	5410651.33	364.00	0	E	1000	109.9	0.0	-188.0	0.0	0.0	85.6	19.6	-2.0	0.0	0.0	0.0	0.0	0.0	-181.3
39	423578.88	5410651.33	364.00	0	E	2000	108.8	0.0	-188.0	0.0	0.0	85.6	51.7	-2.0	0.0	0.0	0.0	0.0	0.0	-214.5
39	423578.88	5410651.33	364.00	0	E	4000	106.7	0.0	-188.0	0.0	0.0	85.6	175.5	-2.0	0.0	0.0	0.0	0.0	0.0	-340.3
39	423578.88	5410651.33	364.00	0	E	8000	99.1	0.0	-188.0	0.0	0.0	85.6	625.8	-2.0	0.0	0.0	0.0	0.0	0.0	-798.3

Point Source, ISO 9613, Name: "E8", ID: ""																				
Nr.	X	Y	Z	Refl.	DEN	Freq.	Lw	l/a	Optime	K0	Dc	Adiv	Aatm	Agr	Afol	Ahous	Abar	Cmet	RL	Lr
	(m)	(m)	(m)			(Hz)	dB(A)	dB	dB	(dB)	(dB)	(dB)	(dB)	(dB)	(dB)	(dB)	(dB)	(dB)	(dB)	dB(A)
40	424128.61	5412094.43	369.17	0	DEN	32	73.7	0.0	0.0	0.0	0.0	86.7	0.2	-5.9	0.0	0.0	0.0	0.0	0.0	-7.4
40	424128.61	5412094.43	369.17	0	DEN	63	89.2	0.0	0.0	0.0	0.0	86.7	0.7	-5.9	0.0	0.0	0.0	0.0	0.0	7.6
40	424128.61	5412094.43	369.17	0	DEN	125	100.9	0.0	0.0	0.0	0.0	86.7	2.5	1.3	0.0	0.0	0.0	0.0	0.0	10.4
40	424128.61	5412094.43	369.17	0	DEN	250	108.4	0.0	0.0	0.0	0.0	86.7	6.4	-1.2	0.0	0.0	0.0	0.0	0.0	16.5
40	424128.61	5412094.43	369.17	0	DEN	500	110.1	0.0	0.0	0.0	0.0	86.7	11.8	-2.6	0.0	0.0	0.0	0.0	0.0	14.1
40	424128.61	5412094.43	369.17	0	DEN	1000	111.9	0.0	0.0	0.0	0.0	86.7	22.4	-2.6	0.0	0.0	0.0	0.0	0.0	5.4
40	424128.61	5412094.43	369.17	0	DEN	2000	109.3	0.0	0.0	0.0	0.0	86.7	59.2	-2.6	0.0	0.0	0.0	0.0	0.0	-34.0
40	424128.61	5412094.43	369.17	0	DEN	4000	100.0	0.0	0.0	0.0	0.0	86.7	200.6	-2.6	0.0	0.0	0.0	0.0	0.0	-184.8
40	424128.61	5412094.43	369.17	0	DEN	8000	92.1	0.0	0.0	0.0	0.0	86.7	715.5	-2.6	0.0	0.0	0.0	0.0	0.0	-707.6

Point Source, ISO 9613, Name: "E17", ID: ""																				
Nr.	X	Y	Z	Refl.	DEN	Freq.	Lw	l/a	Optime	K0	Dc	Adiv	Aatm	Agr	Afol	Ahous	Abar	Cmet	RL	Lr
	(m)	(m)	(m)			(Hz)	dB(A)	dB	dB	(dB)	(dB)	(dB)	(dB)	(dB)	(dB)	(dB)	(dB)	(dB)	(dB)	dB(A)
41	426811.10	5409918.00	379.00	0	D	32	73.7	0.0	0.0	0.0	0.0	80.6	0.1	-5.7	0.0	0.0	0.0	0.0	0.0	-1.3
41	426811.10	5409918.00	379.00	0	D	63	89.2	0.0	0.0	0.0	0.0	80.6	0.4	-5.7	0.0	0.0	0.0	0.0	0.0	13.9
41	426811.10	5409918.00	379.00	0	D	125	100.9	0.0	0.0	0.0	0.0	80.6	1.2	1.5	0.0	0.0	0.0	0.0	0.0	17.5
41	426811.10	5409918.00	379.00	0	D	250	108.4	0.0	0.0	0.0	0.0	80.6	3.2	-0.9	0.0	0.0	0.0	0.0	0.0	25.5
41	426811.10	5409918.00	379.00	0	D	500	110.1	0.0	0.0	0.0	0.0	80.6	5.8	-2.3	0.0	0.0	0.0	0.0	0.0	25.9
41	426811.10	5409918.00	379.00	0	D	1000	111.9	0.0	0.0	0.0	0.0	80.6	11.1	-2.3	0.0	0.0	0.0	0.0	0.0	22.5
41	426811.10	5409918.00	379.00	0	D	2000	109.3	0.0	0.0	0.0	0.0	80.6	29.3	-2.3	0.0	0.0	0.0	0.0	0.0	1.6
41	426811.10	5409918.00	379.00	0	D	4000	100.0	0.0	0.0	0.0	0.0	80.6	99.4	-2.3	0.0	0.0	0.0	0.0	0.0	-77.8
41	426811.10	5409918.00	379.00	0	D	8000	92.1	0.0	0.0	0.0	0.0	80.6	354.6	-2.3	0.0	0.0	0.0	0.0	0.0	-340.9
41	426811.10	5409918.00	379.00	0	N	32	73.7	0.0	-188.0	0.0	0.0	80.6	0.1	-5.7	0.0	0.0	0.0	0.0	0.0	-189.3
41	426811.10	5409918.00	379.00	0	N	63	89.2	0.0	-188.0	0.0	0.0	80.6	0.4	-5.7	0.0	0.0	0.0	0.0	0.0	-174.1
41	426811.10	5409918.00	379.00	0	N	125	100.9	0.0	-188.0	0.0	0.0	80.6	1.2	1.5	0.0	0.0	0.0	0.0	0.0	-170.5
41	426811.10	5409918.00	379.00	0	N	250	108.4	0.0	-188.0	0.0	0.0	80.6	3.2	-0.9	0.0	0.0	0.0	0.0	0.0	-162.5
41	426811.10	5409918.00	379.00	0	N	500	110.1	0.0	-188.0	0.0	0.0	80.6	5.8	-2.3	0.0	0.0	0.0	0.0	0.0	-162.1
41	426811.10	5409918.00	379.00	0	N	1000	111.9	0.0	-188.0	0.0	0.0	80.6	11.1	-2.3	0.0	0.0	0.0	0.0	0.0	-165.5
41	426811.10	5409918.00	379.00	0	N	2000	109.3	0.0	-188.0	0.0	0.0	80.6	29.3	-2.3	0.0	0.0	0.0	0.0	0.0	-186.4
41	426811.10	5409918.00	379.00	0	N	4000	100.0	0.0	-188.0	0.0	0.0	80.6	99.4	-2.3	0.0	0.0	0.0	0.0	0.0	-265.8
41	426811.10	5409918.00	379.00	0	N	8000	92.1	0.0	-188.0	0.0	0.0	80.6	354.6	-2.3	0.0	0.0	0.0	0.0	0.0	-528.9
41	426811.10	5409918.00	379.00	0	E	32	73.7	0.0	-188.0	0.0	0.0	80.6	0.1	-5.7	0.0	0.0	0.0	0.0	0.0	-189.3

Point Source, ISO 9613, Name: "E17", ID: ""																				
Nr.	X	Y	Z	Refl.	DEN	Freq.	Lw	l/a	Optime	K0	Dc	Adiv	Aatm	Agr	Afol	Ahous	Abar	Cmet	RL	Lr
	(m)	(m)	(m)			(Hz)	dB(A)	dB	dB	(dB)	(dB)	(dB)	(dB)	(dB)	(dB)	(dB)	(dB)	(dB)	(dB)	dB(A)
41	426811.10	5409918.00	379.00	0	E	63	89.2	0.0	-188.0	0.0	0.0	80.6	0.4	-5.7	0.0	0.0	0.0	0.0	0.0	-174.1
41	426811.10	5409918.00	379.00	0	E	125	100.9	0.0	-188.0	0.0	0.0	80.6	1.2	1.5	0.0	0.0	0.0	0.0	0.0	-170.5
41	426811.10	5409918.00	379.00	0	E	250	108.4	0.0	-188.0	0.0	0.0	80.6	3.2	-0.9	0.0	0.0	0.0	0.0	0.0	-162.5
41	426811.10	5409918.00	379.00	0	E	500	110.1	0.0	-188.0	0.0	0.0	80.6	5.8	-2.3	0.0	0.0	0.0	0.0	0.0	-162.1
41	426811.10	5409918.00	379.00	0	E	1000	111.9	0.0	-188.0	0.0	0.0	80.6	11.1	-2.3	0.0	0.0	0.0	0.0	0.0	-165.5
41	426811.10	5409918.00	379.00	0	E	2000	109.3	0.0	-188.0	0.0	0.0	80.6	29.3	-2.3	0.0	0.0	0.0	0.0	0.0	-186.4
41	426811.10	5409918.00	379.00	0	E	4000	100.0	0.0	-188.0	0.0	0.0	80.6	99.4	-2.3	0.0	0.0	0.0	0.0	0.0	-265.8
41	426811.10	5409918.00	379.00	0	E	8000	92.1	0.0	-188.0	0.0	0.0	80.6	354.6	-2.3	0.0	0.0	0.0	0.0	0.0	-528.9

Point Source, ISO 9613, Name: "T2", ID: ""																				
Nr.	X	Y	Z	Refl.	DEN	Freq.	Lw	l/a	Optime	K0	Dc	Adiv	Aatm	Agr	Afol	Ahous	Abar	Cmet	RL	Lr
	(m)	(m)	(m)			(Hz)	dB(A)	dB	dB	(dB)	(dB)	(dB)	(dB)	(dB)	(dB)	(dB)	(dB)	(dB)	(dB)	dB(A)
42	426722.32	5411191.07	374.52	0	DEN	63	89.7	0.0	0.0	0.0	0.0	83.7	0.5	-5.8	0.0	0.0	4.8	0.0	0.0	6.6
42	426722.32	5411191.07	374.52	0	DEN	125	101.8	0.0	0.0	0.0	0.0	83.7	1.8	1.0	0.0	0.0	3.8	0.0	0.0	11.6
42	426722.32	5411191.07	374.52	0	DEN	250	104.3	0.0	0.0	0.0	0.0	83.7	4.5	-1.5	0.0	0.0	4.8	0.0	0.0	12.8
42	426722.32	5411191.07	374.52	0	DEN	500	109.7	0.0	0.0	0.0	0.0	83.7	8.3	-2.9	0.0	0.0	4.8	0.0	0.0	15.8
42	426722.32	5411191.07	374.52	0	DEN	1000	106.9	0.0	0.0	0.0	0.0	83.7	15.7	-2.9	0.0	0.0	4.8	0.0	0.0	5.6
42	426722.32	5411191.07	374.52	0	DEN	2000	103.1	0.0	0.0	0.0	0.0	83.7	41.6	-2.9	0.0	0.0	4.8	0.0	0.0	-24.1
42	426722.32	5411191.07	374.52	0	DEN	4000	97.9	0.0	0.0	0.0	0.0	83.7	140.9	-2.9	0.0	0.0	4.8	0.0	0.0	-128.6
42	426722.32	5411191.07	374.52	0	DEN	8000	88.8	0.0	0.0	0.0	0.0	83.7	502.7	-2.9	0.0	0.0	4.8	0.0	0.0	-499.5

Point Source, ISO 9613, Name: "T1", ID: ""																				
Nr.	X	Y	Z	Refl.	DEN	Freq.	Lw	l/a	Optime	K0	Dc	Adiv	Aatm	Agr	Afol	Ahous	Abar	Cmet	RL	Lr
	(m)	(m)	(m)			(Hz)	dB(A)	dB	dB	(dB)	(dB)	(dB)	(dB)	(dB)	(dB)	(dB)	(dB)	(dB)	(dB)	dB(A)
43	426722.50	5411203.18	374.62	0	DEN	63	89.7	0.0	0.0	0.0	0.0	83.7	0.5	-5.8	0.0	0.0	4.8	0.0	0.0	6.5
43	426722.50	5411203.18	374.62	0	DEN	125	101.8	0.0	0.0	0.0	0.0	83.7	1.8	1.0	0.0	0.0	3.8	0.0	0.0	11.6
43	426722.50	5411203.18	374.62	0	DEN	250	104.3	0.0	0.0	0.0	0.0	83.7	4.5	-1.5	0.0	0.0	4.8	0.0	0.0	12.8
43	426722.50	5411203.18	374.62	0	DEN	500	109.7	0.0	0.0	0.0	0.0	83.7	8.3	-2.9	0.0	0.0	4.8	0.0	0.0	15.8
43	426722.50	5411203.18	374.62	0	DEN	1000	106.9	0.0	0.0	0.0	0.0	83.7	15.8	-2.9	0.0	0.0	4.8	0.0	0.0	5.5
43	426722.50	5411203.18	374.62	0	DEN	2000	103.1	0.0	0.0	0.0	0.0	83.7	41.7	-2.9	0.0	0.0	4.8	0.0	0.0	-24.2
43	426722.50	5411203.18	374.62	0	DEN	4000	97.9	0.0	0.0	0.0	0.0	83.7	141.3	-2.9	0.0	0.0	4.8	0.0	0.0	-129.0
43	426722.50	5411203.18	374.62	0	DEN	8000	88.8	0.0	0.0	0.0	0.0	83.7	504.1	-2.9	0.0	0.0	4.8	0.0	0.0	-500.9

Point Source, ISO 9613, Name: "E10", ID: ""																				
Nr.	X	Y	Z	Refl.	DEN	Freq.	Lw	l/a	Optime	K0	Dc	Adiv	Aatm	Agr	Afol	Ahous	Abar	Cmet	RL	Lr
	(m)	(m)	(m)			(Hz)	dB(A)	dB	dB	(dB)	(dB)	(dB)	(dB)	(dB)	(dB)	(dB)	(dB)	(dB)	(dB)	dB(A)
44	423601.00	5411843.39	367.75	0	DEN	32	73.7	0.0	0.0	0.0	0.0	86.9	0.2	-5.9	0.0	0.0	0.0	0.0	0.0	-7.5
44	423601.00	5411843.39	367.75	0	DEN	63	89.2	0.0	0.0	0.0	0.0	86.9	0.8	-5.9	0.0	0.0	0.0	0.0	0.0	7.4
44	423601.00	5411843.39	367.75	0	DEN	125	100.9	0.0	0.0	0.0	0.0	86.9	2.6	0.8	0.0	0.0	0.0	0.0	0.0	10.7
44	423601.00	5411843.39	367.75	0	DEN	250	108.4	0.0	0.0	0.0	0.0	86.9	6.5	-1.7	0.0	0.0	0.0	0.0	0.0	16.7
44	423601.00	5411843.39	367.75	0	DEN	500	110.1	0.0	0.0	0.0	0.0	86.9	12.0	-3.1	0.0	0.0	0.0	0.0	0.0	14.3
44	423601.00	5411843.39	367.75	0	DEN	1000	111.9	0.0	0.0	0.0	0.0	86.9	22.8	-3.1	0.0	0.0	0.0	0.0	0.0	5.3
44	423601.00	5411843.39	367.75	0	DEN	2000	109.3	0.0	0.0	0.0	0.0	86.9	60.2	-3.1	0.0	0.0	0.0	0.0	0.0	-34.7
44	423601.00	5411843.39	367.75	0	DEN	4000	100.0	0.0	0.0	0.0	0.0	86.9	204.0	-3.1	0.0	0.0	0.0	0.0	0.0	-187.8
44	423601.00	5411843.39	367.75	0	DEN	8000	92.1	0.0	0.0	0.0	0.0	86.9	727.5	-3.1	0.0	0.0	0.0	0.0	0.0	-719.2

Point Source, ISO 9613, Name: "C", ID: ""																				
Nr.	X	Y	Z	Refl.	DEN	Freq.	Lw	l/a	Optime	K0	Dc	Adiv	Aatm	Agr	Afol	Ahous	Abar	Cmet	RL	Lr
	(m)	(m)	(m)			(Hz)	dB(A)	dB	dB	(dB)	(dB)	(dB)	(dB)	(dB)	(dB)	(dB)	(dB)	(dB)	(dB)	dB(A)
45	426774.93	5410209.00	397.00	0	DEN	32	69.2	0.0	0.0	0.0	0.0	81.4	0.1	-5.8	0.0	0.0	0.0	0.0	0.0	-6.6
45	426774.93	5410209.00	397.00	0	DEN	63	89.7	0.0	0.0	0.0	0.0	81.4	0.4	-5.8	0.0	0.0	0.0	0.0	0.0	13.6
45	426774.93	5410209.00	397.00	0	DEN	125	92.6	0.0	0.0	0.0	0.0	81.4	1.4	1.3	0.0	0.0	0.0	0.0	0.0	8.4
45	426774.93	5410209.00	397.00	0	DEN	250	97.9	0.0	0.0	0.0	0.0	81.4	3.5	-1.1	0.0	0.0	0.0	0.0	0.0	14.1
45	426774.93	5410209.00	397.00	0	DEN	500	104.3	0.0	0.0	0.0	0.0	81.4	6.4	-2.5	0.0	0.0	0.0	0.0	0.0	18.9
45	426774.93	5410209.00	397.00	0	DEN	1000	106.4	0.0	0.0	0.0	0.0	81.4	12.2	-2.5	0.0	0.0	0.0	0.0	0.0	15.3
45	426774.93	5410209.00	397.00	0	DEN	2000	105.0	0.0	0.0	0.0	0.0	81.4	32.1	-2.5	0.0	0.0	0.0	0.0	0.0	-6.1
45	426774.93	5410209.00	397.00	0	DEN	4000	100.7	0.0	0.0	0.0	0.0	81.4	109.0	-2.5	0.0	0.0	0.0	0.0	0.0	-87.3
45	426774.93	5410209.00	397.00	0	DEN	8000	91.7	0.0	0.0	0.0	0.0	81.4	388.8	-2.5	0.0	0.0	0.0	0.0	0.0	-376.0

Point Source, ISO 9613, Name: "E11", ID: ""																				
Nr.	X	Y	Z	Refl.	DEN	Freq.	Lw	l/a	Optime	K0	Dc	Adiv	Aatm	Agr	Afol	Ahous	Abar	Cmet	RL	Lr
	(m)	(m)	(m)			(Hz)	dB(A)	dB	dB	(dB)	(dB)	(dB)	(dB)	(dB)	(dB)	(dB)	(dB)	(dB)	(dB)	dB(A)
47	423119.70	5411907.73	369.54	0	DEN	32	73.7	0.0	0.0	0.0	0.0	87.4	0.2	-5.9	0.0	0.0	0.0	0.0	0.0	-8.0
47	423119.70	5411907.73	369.54	0	DEN	63	89.2	0.0	0.0	0.0	0.0	87.4	0.8	-5.9	0.0	0.0	0.0	0.0	0.0	6.9

Point Source, ISO 9613, Name: "E11", ID: ""																					
Nr.	X	Y	Z	Refl.	DEN	Freq.	Lw	l/a	Optime	K0	Dc	Adiv	Aatm	Agr	Afol	Ahous	Abar	Cmet	RL	Lr
	(m)	(m)	(m)			(Hz)	dB(A)	dB	dB	(dB)	(dB)	(dB)	(dB)	(dB)	(dB)	(dB)	(dB)	(dB)	(dB)	dB(A)
47	423119.70	5411907.73	369.54	0	DEN	125	100.9	0.0	0.0	0.0	0.0	87.4	2.7	0.8	0.0	0.0	0.0	0.0	0.0	10.0
47	423119.70	5411907.73	369.54	0	DEN	250	108.4	0.0	0.0	0.0	0.0	87.4	6.9	-1.6	0.0	0.0	0.0	0.0	0.0	15.8
47	423119.70	5411907.73	369.54	0	DEN	500	110.1	0.0	0.0	0.0	0.0	87.4	12.7	-3.0	0.0	0.0	0.0	0.0	0.0	13.1
47	423119.70	5411907.73	369.54	0	DEN	1000	111.9	0.0	0.0	0.0	0.0	87.4	24.1	-3.0	0.0	0.0	0.0	0.0	0.0	3.5
47	423119.70	5411907.73	369.54	0	DEN	2000	109.3	0.0	0.0	0.0	0.0	87.4	63.6	-3.0	0.0	0.0	0.0	0.0	0.0	-38.6
47	423119.70	5411907.73	369.54	0	DEN	4000	100.0	0.0	0.0	0.0	0.0	87.4	215.7	-3.0	0.0	0.0	0.0	0.0	0.0	-200.0
47	423119.70	5411907.73	369.54	0	DEN	8000	92.1	0.0	0.0	0.0	0.0	87.4	769.2	-3.0	0.0	0.0	0.0	0.0	0.0	-761.5

Point Source, ISO 9613, Name: "TD05", ID: ""																					
Nr.	X	Y	Z	Refl.	DEN	Freq.	Lw	l/a	Optime	K0	Dc	Adiv	Aatm	Agr	Afol	Ahous	Abar	Cmet	RL	Lr
	(m)	(m)	(m)			(Hz)	dB(A)	dB	dB	(dB)	(dB)	(dB)	(dB)	(dB)	(dB)	(dB)	(dB)	(dB)	(dB)	dB(A)
48	427911.05	5409979.33	376.00	0	DEN	32	63.7	0.0	0.0	0.0	0.0	80.7	0.1	-5.8	0.0	0.0	4.8	0.0	0.0	-16.1
48	427911.05	5409979.33	376.00	0	DEN	63	84.2	0.0	0.0	0.0	0.0	80.7	0.4	-5.8	0.0	0.0	4.8	0.0	0.0	4.1
48	427911.05	5409979.33	376.00	0	DEN	125	91.6	0.0	0.0	0.0	0.0	80.7	1.3	1.6	0.0	0.0	3.2	0.0	0.0	4.8
48	427911.05	5409979.33	376.00	0	DEN	250	99.2	0.0	0.0	0.0	0.0	80.7	3.2	-0.8	0.0	0.0	4.8	0.0	0.0	11.3
48	427911.05	5409979.33	376.00	0	DEN	500	103.1	0.0	0.0	0.0	0.0	80.7	5.9	-2.2	0.0	0.0	4.8	0.0	0.0	13.9
48	427911.05	5409979.33	376.00	0	DEN	1000	103.3	0.0	0.0	0.0	0.0	80.7	11.2	-2.2	0.0	0.0	4.8	0.0	0.0	8.8
48	427911.05	5409979.33	376.00	0	DEN	2000	104.8	0.0	0.0	0.0	0.0	80.7	29.6	-2.2	0.0	0.0	4.8	0.0	0.0	-8.1
48	427911.05	5409979.33	376.00	0	DEN	4000	96.1	0.0	0.0	0.0	0.0	80.7	100.4	-2.2	0.0	0.0	4.8	0.0	0.0	-87.5
48	427911.05	5409979.33	376.00	0	DEN	8000	87.2	0.0	0.0	0.0	0.0	80.7	357.9	-2.2	0.0	0.0	4.8	0.0	0.0	-354.0

Point Source, ISO 9613, Name: "E12", ID: ""																					
Nr.	X	Y	Z	Refl.	DEN	Freq.	Lw	l/a	Optime	K0	Dc	Adiv	Aatm	Agr	Afol	Ahous	Abar	Cmet	RL	Lr
	(m)	(m)	(m)			(Hz)	dB(A)	dB	dB	(dB)	(dB)	(dB)	(dB)	(dB)	(dB)	(dB)	(dB)	(dB)	(dB)	dB(A)
49	422771.46	5412032.69	371.08	0	DEN	32	73.7	0.0	0.0	0.0	0.0	87.8	0.2	-5.9	0.0	0.0	0.0	0.0	0.0	-8.4
49	422771.46	5412032.69	371.08	0	DEN	63	89.2	0.0	0.0	0.0	0.0	87.8	0.8	-5.9	0.0	0.0	0.0	0.0	0.0	6.5
49	422771.46	5412032.69	371.08	0	DEN	125	100.9	0.0	0.0	0.0	0.0	87.8	2.8	1.1	0.0	0.0	0.0	0.0	0.0	9.2
49	422771.46	5412032.69	371.08	0	DEN	250	108.4	0.0	0.0	0.0	0.0	87.8	7.2	-1.4	0.0	0.0	0.0	0.0	0.0	14.8
49	422771.46	5412032.69	371.08	0	DEN	500	110.1	0.0	0.0	0.0	0.0	87.8	13.3	-2.8	0.0	0.0	0.0	0.0	0.0	11.8
49	422771.46	5412032.69	371.08	0	DEN	1000	111.9	0.0	0.0	0.0	0.0	87.8	25.3	-2.8	0.0	0.0	0.0	0.0	0.0	1.6
49	422771.46	5412032.69	371.08	0	DEN	2000	109.3	0.0	0.0	0.0	0.0	87.8	66.7	-2.8	0.0	0.0	0.0	0.0	0.0	-42.4
49	422771.46	5412032.69	371.08	0	DEN	4000	100.0	0.0	0.0	0.0	0.0	87.8	226.3	-2.8	0.0	0.0	0.0	0.0	0.0	-211.3
49	422771.46	5412032.69	371.08	0	DEN	8000	92.1	0.0	0.0	0.0	0.0	87.8	807.3	-2.8	0.0	0.0	0.0	0.0	0.0	-800.2

Point Source, ISO 9613, Name: "E13", ID: ""																					
Nr.	X	Y	Z	Refl.	DEN	Freq.	Lw	l/a	Optime	K0	Dc	Adiv	Aatm	Agr	Afol	Ahous	Abar	Cmet	RL	Lr
	(m)	(m)	(m)			(Hz)	dB(A)	dB	dB	(dB)	(dB)	(dB)	(dB)	(dB)	(dB)	(dB)	(dB)	(dB)	(dB)	dB(A)
51	422600.09	5412038.49	370.17	0	DEN	32	73.7	0.0	0.0	0.0	0.0	87.9	0.2	-5.9	0.0	0.0	0.0	0.0	0.0	-8.6
51	422600.09	5412038.49	370.17	0	DEN	63	89.2	0.0	0.0	0.0	0.0	87.9	0.9	-5.9	0.0	0.0	0.0	0.0	0.0	6.3
51	422600.09	5412038.49	370.17	0	DEN	125	100.9	0.0	0.0	0.0	0.0	87.9	2.9	1.2	0.0	0.0	0.0	0.0	0.0	8.9
51	422600.09	5412038.49	370.17	0	DEN	250	108.4	0.0	0.0	0.0	0.0	87.9	7.3	-1.3	0.0	0.0	0.0	0.0	0.0	14.4
51	422600.09	5412038.49	370.17	0	DEN	500	110.1	0.0	0.0	0.0	0.0	87.9	13.5	-2.7	0.0	0.0	0.0	0.0	0.0	11.3
51	422600.09	5412038.49	370.17	0	DEN	1000	111.9	0.0	0.0	0.0	0.0	87.9	25.7	-2.7	0.0	0.0	0.0	0.0	0.0	1.0
51	422600.09	5412038.49	370.17	0	DEN	2000	109.3	0.0	0.0	0.0	0.0	87.9	67.9	-2.7	0.0	0.0	0.0	0.0	0.0	-43.8
51	422600.09	5412038.49	370.17	0	DEN	4000	100.0	0.0	0.0	0.0	0.0	87.9	230.3	-2.7	0.0	0.0	0.0	0.0	0.0	-215.5
51	422600.09	5412038.49	370.17	0	DEN	8000	92.1	0.0	0.0	0.0	0.0	87.9	821.5	-2.7	0.0	0.0	0.0	0.0	0.0	-814.6

Point Source, ISO 9613, Name: "TD11N", ID: ""																					
Nr.	X	Y	Z	Refl.	DEN	Freq.	Lw	l/a	Optime	K0	Dc	Adiv	Aatm	Agr	Afol	Ahous	Abar	Cmet	RL	Lr
	(m)	(m)	(m)			(Hz)	dB(A)	dB	dB	(dB)	(dB)	(dB)	(dB)	(dB)	(dB)	(dB)	(dB)	(dB)	(dB)	dB(A)
52	423579.88	5410650.34	364.00	0	D	32	68.0	0.0	-188.0	0.0	0.0	85.6	0.2	-5.9	0.0	0.0	0.0	0.0	0.0	-199.9
52	423579.88	5410650.34	364.00	0	D	63	84.6	0.0	-188.0	0.0	0.0	85.6	0.7	-5.9	0.0	0.0	0.0	0.0	0.0	-183.8
52	423579.88	5410650.34	364.00	0	D	125	98.8	0.0	-188.0	0.0	0.0	85.6	2.2	1.9	0.0	0.0	0.0	0.0	0.0	-178.8
52	423579.88	5410650.34	364.00	0	D	250	105.0	0.0	-188.0	0.0	0.0	85.6	5.6	-0.6	0.0	0.0	0.0	0.0	0.0	-173.6
52	423579.88	5410650.34	364.00	0	D	500	110.2	0.0	-188.0	0.0	0.0	85.6	10.3	-2.0	0.0	0.0	0.0	0.0	0.0	-171.7
52	423579.88	5410650.34	364.00	0	D	1000	110.4	0.0	-188.0	0.0	0.0	85.6	19.6	-2.0	0.0	0.0	0.0	0.0	0.0	-180.8
52	423579.88	5410650.34	364.00	0	D	2000	108.3	0.0	-188.0	0.0	0.0	85.6	51.7	-2.0	0.0	0.0	0.0	0.0	0.0	-215.0
52	423579.88	5410650.34	364.00	0	D	4000	99.9	0.0	-188.0	0.0	0.0	85.6	175.4	-2.0	0.0	0.0	0.0	0.0	0.0	-347.1
52	423579.88	5410650.34	364.00	0	D	8000	91.3	0.0	-188.0	0.0	0.0	85.6	625.7	-2.0	0.0	0.0	0.0	0.0	0.0	-806.0
52	423579.88	5410650.34	364.00	0	N	32	68.0	0.0	0.0	0.0	0.0	85.6	0.2	-5.9	0.0	0.0	0.0	0.0	0.0	-11.9
52	423579.88	5410650.34	364.00	0	N	63	84.6	0.0	0.0	0.0	0.0	85.6	0.7	-5.9	0.0	0.0	0.0	0.0	0.0	4.2
52	423579.88	5410650.34	364.00	0	N	125	98.8	0.0	0.0	0.0	0.0	85.6	2.2	1.9	0.0	0.0	0.0	0.0	0.0	9.2
52	423579.88	5410650.34	364.00	0	N	250	105.0	0.0	0.0	0.0	0.0	85.6	5.6	-0.6	0.0	0.0	0.0	0.0	0.0	14.4
52	423579.88	5410650.34	364.00	0	N	500	110.2	0.0	0.0	0.0	0.0	85.6	10.3	-2.0	0.0	0.0	0.0	0.0	0.0	16.3

Point Source, ISO 9613, Name: "TD11N", ID: ""																					
Nr.	X	Y	Z	Refl.	DEN	Freq.	Lw	l/a	Optime	K0	Dc	Adiv	Aatm	Agr	Afol	Ahous	Abar	Cmet	RL	Lr
	(m)	(m)	(m)			(Hz)	dB(A)	dB	dB	(dB)	(dB)	(dB)	(dB)	(dB)	(dB)	(dB)	(dB)	(dB)	(dB)	dB(A)
52	423579.88	5410650.34	364.00	0	N	1000	110.4	0.0	0.0	0.0	0.0	85.6	19.6	-2.0	0.0	0.0	0.0	0.0	0.0	7.2
52	423579.88	5410650.34	364.00	0	N	2000	108.3	0.0	0.0	0.0	0.0	85.6	51.7	-2.0	0.0	0.0	0.0	0.0	0.0	-27.0
52	423579.88	5410650.34	364.00	0	N	4000	99.9	0.0	0.0	0.0	0.0	85.6	175.4	-2.0	0.0	0.0	0.0	0.0	0.0	-159.1
52	423579.88	5410650.34	364.00	0	N	8000	91.3	0.0	0.0	0.0	0.0	85.6	625.7	-2.0	0.0	0.0	0.0	0.0	0.0	-618.0
52	423579.88	5410650.34	364.00	0	E	32	68.0	0.0	0.0	0.0	0.0	85.6	0.2	-5.9	0.0	0.0	0.0	0.0	0.0	-11.9
52	423579.88	5410650.34	364.00	0	E	63	84.6	0.0	0.0	0.0	0.0	85.6	0.7	-5.9	0.0	0.0	0.0	0.0	0.0	4.2
52	423579.88	5410650.34	364.00	0	E	125	98.8	0.0	0.0	0.0	0.0	85.6	2.2	1.9	0.0	0.0	0.0	0.0	0.0	9.2
52	423579.88	5410650.34	364.00	0	E	250	105.0	0.0	0.0	0.0	0.0	85.6	5.6	-0.6	0.0	0.0	0.0	0.0	0.0	14.4
52	423579.88	5410650.34	364.00	0	E	500	110.2	0.0	0.0	0.0	0.0	85.6	10.3	-2.0	0.0	0.0	0.0	0.0	0.0	16.3
52	423579.88	5410650.34	364.00	0	E	1000	110.4	0.0	0.0	0.0	0.0	85.6	19.6	-2.0	0.0	0.0	0.0	0.0	0.0	7.2
52	423579.88	5410650.34	364.00	0	E	2000	108.3	0.0	0.0	0.0	0.0	85.6	51.7	-2.0	0.0	0.0	0.0	0.0	0.0	-27.0
52	423579.88	5410650.34	364.00	0	E	4000	99.9	0.0	0.0	0.0	0.0	85.6	175.4	-2.0	0.0	0.0	0.0	0.0	0.0	-159.1
52	423579.88	5410650.34	364.00	0	E	8000	91.3	0.0	0.0	0.0	0.0	85.6	625.7	-2.0	0.0	0.0	0.0	0.0	0.0	-618.0

Point Source, ISO 9613, Name: "E14", ID: ""																					
Nr.	X	Y	Z	Refl.	DEN	Freq.	Lw	l/a	Optime	K0	Dc	Adiv	Aatm	Agr	Afol	Ahous	Abar	Cmet	RL	Lr
	(m)	(m)	(m)			(Hz)	dB(A)	dB	dB	(dB)	(dB)	(dB)	(dB)	(dB)	(dB)	(dB)	(dB)	(dB)	(dB)	dB(A)
53	422487.25	5412003.77	368.69	0	DEN	32	73.7	0.0	0.0	0.0	0.0	88.0	0.2	-5.9	0.0	0.0	0.0	0.0	0.0	-8.6
53	422487.25	5412003.77	368.69	0	DEN	63	89.2	0.0	0.0	0.0	0.0	88.0	0.9	-5.9	0.0	0.0	0.0	0.0	0.0	6.2
53	422487.25	5412003.77	368.69	0	DEN	125	100.9	0.0	0.0	0.0	0.0	88.0	2.9	1.1	0.0	0.0	0.0	0.0	0.0	8.8
53	422487.25	5412003.77	368.69	0	DEN	250	108.4	0.0	0.0	0.0	0.0	88.0	7.4	-1.3	0.0	0.0	0.0	0.0	0.0	14.3
53	422487.25	5412003.77	368.69	0	DEN	500	110.1	0.0	0.0	0.0	0.0	88.0	13.7	-2.7	0.0	0.0	0.0	0.0	0.0	11.1
53	422487.25	5412003.77	368.69	0	DEN	1000	111.9	0.0	0.0	0.0	0.0	88.0	25.9	-2.7	0.0	0.0	0.0	0.0	0.0	0.7
53	422487.25	5412003.77	368.69	0	DEN	2000	109.3	0.0	0.0	0.0	0.0	88.0	68.4	-2.7	0.0	0.0	0.0	0.0	0.0	-44.4
53	422487.25	5412003.77	368.69	0	DEN	4000	100.0	0.0	0.0	0.0	0.0	88.0	232.1	-2.7	0.0	0.0	0.0	0.0	0.0	-217.4
53	422487.25	5412003.77	368.69	0	DEN	8000	92.1	0.0	0.0	0.0	0.0	88.0	827.7	-2.7	0.0	0.0	0.0	0.0	0.0	-820.9

Point Source, ISO 9613, Name: "E15", ID: ""																					
Nr.	X	Y	Z	Refl.	DEN	Freq.	Lw	l/a	Optime	K0	Dc	Adiv	Aatm	Agr	Afol	Ahous	Abar	Cmet	RL	Lr
	(m)	(m)	(m)			(Hz)	dB(A)	dB	dB	(dB)	(dB)	(dB)	(dB)	(dB)	(dB)	(dB)	(dB)	(dB)	(dB)	dB(A)
54	422255.45	5411893.59	366.24	0	DEN	32	73.7	0.0	0.0	0.0	0.0	88.1	0.2	-5.9	0.0	0.0	0.0	0.0	0.0	-8.7
54	422255.45	5411893.59	366.24	0	DEN	63	89.2	0.0	0.0	0.0	0.0	88.1	0.9	-5.9	0.0	0.0	0.0	0.0	0.0	6.1
54	422255.45	5411893.59	366.24	0	DEN	125	100.9	0.0	0.0	0.0	0.0	88.1	2.9	1.7	0.0	0.0	0.0	0.0	0.0	8.1
54	422255.45	5411893.59	366.24	0	DEN	250	108.4	0.0	0.0	0.0	0.0	88.1	7.5	-0.7	0.0	0.0	0.0	0.0	0.0	13.5
54	422255.45	5411893.59	366.24	0	DEN	500	110.1	0.0	0.0	0.0	0.0	88.1	13.8	-2.1	0.0	0.0	0.0	0.0	0.0	10.3
54	422255.45	5411893.59	366.24	0	DEN	1000	111.9	0.0	0.0	0.0	0.0	88.1	26.2	-2.1	0.0	0.0	0.0	0.0	0.0	-0.3
54	422255.45	5411893.59	366.24	0	DEN	2000	109.3	0.0	0.0	0.0	0.0	88.1	69.3	-2.1	0.0	0.0	0.0	0.0	0.0	-46.0
54	422255.45	5411893.59	366.24	0	DEN	4000	100.0	0.0	0.0	0.0	0.0	88.1	234.9	-2.1	0.0	0.0	0.0	0.0	0.0	-220.9
54	422255.45	5411893.59	366.24	0	DEN	8000	92.1	0.0	0.0	0.0	0.0	88.1	838.0	-2.1	0.0	0.0	0.0	0.0	0.0	-831.9

Point Source, ISO 9613, Name: "E16", ID: ""																					
Nr.	X	Y	Z	Refl.	DEN	Freq.	Lw	l/a	Optime	K0	Dc	Adiv	Aatm	Agr	Afol	Ahous	Abar	Cmet	RL	Lr
	(m)	(m)	(m)			(Hz)	dB(A)	dB	dB	(dB)	(dB)	(dB)	(dB)	(dB)	(dB)	(dB)	(dB)	(dB)	(dB)	dB(A)
55	422092.24	5411823.22	366.90	0	DEN	32	73.7	0.0	0.0	0.0	0.0	88.2	0.2	-5.9	0.0	0.0	0.0	0.0	0.0	-8.8
55	422092.24	5411823.22	366.90	0	DEN	63	89.2	0.0	0.0	0.0	0.0	88.2	0.9	-5.9	0.0	0.0	0.0	0.0	0.0	6.0
55	422092.24	5411823.22	366.90	0	DEN	125	100.9	0.0	0.0	0.0	0.0	88.2	3.0	1.7	0.0	0.0	0.0	0.0	0.0	8.1
55	422092.24	5411823.22	366.90	0	DEN	250	108.4	0.0	0.0	0.0	0.0	88.2	7.6	-0.8	0.0	0.0	0.0	0.0	0.0	13.4
55	422092.24	5411823.22	366.90	0	DEN	500	110.1	0.0	0.0	0.0	0.0	88.2	14.0	-2.2	0.0	0.0	0.0	0.0	0.0	10.1
55	422092.24	5411823.22	366.90	0	DEN	1000	111.9	0.0	0.0	0.0	0.0	88.2	26.5	-2.2	0.0	0.0	0.0	0.0	0.0	-0.6
55	422092.24	5411823.22	366.90	0	DEN	2000	109.3	0.0	0.0	0.0	0.0	88.2	70.0	-2.2	0.0	0.0	0.0	0.0	0.0	-46.7
55	422092.24	5411823.22	366.90	0	DEN	4000	100.0	0.0	0.0	0.0	0.0	88.2	237.3	-2.2	0.0	0.0	0.0	0.0	0.0	-223.3
55	422092.24	5411823.22	366.90	0	DEN	8000	92.1	0.0	0.0	0.0	0.0	88.2	846.4	-2.2	0.0	0.0	0.0	0.0	0.0	-840.3

Point Source, ISO 9613, Name: "TD20", ID: ""																					
Nr.	X	Y	Z	Refl.	DEN	Freq.	Lw	l/a	Optime	K0	Dc	Adiv	Aatm	Agr	Afol	Ahous	Abar	Cmet	RL	Lr
	(m)	(m)	(m)			(Hz)	dB(A)	dB	dB	(dB)	(dB)	(dB)	(dB)	(dB)	(dB)	(dB)	(dB)	(dB)	(dB)	dB(A)
56	423481.66	5411920.30	370.70	0	D	32	68.0	0.0	0.0	0.0	0.0	87.1	0.2	-5.9	0.0	0.0	0.0	0.0	0.0	-13.4
56	423481.66	5411920.30	370.70	0	D	63	84.6	0.0	0.0	0.0	0.0	87.1	0.8	-5.9	0.0	0.0	0.0	0.0	0.0	2.6
56	423481.66	5411920.30	370.70	0	D	125	98.8	0.0	0.0	0.0	0.0	87.1	2.6	0.7	0.0	0.0	0.0	0.0	0.0	8.4
56	423481.66	5411920.30	370.70	0	D	250	105.0	0.0	0.0	0.0	0.0	87.1	6.6	-1.7	0.0	0.0	0.0	0.0	0.0	13.0
56	423481.66	5411920.30	370.70	0	D	500	110.2	0.0	0.0	0.0	0.0	87.1	12.3	-3.1	0.0	0.0	0.0	0.0	0.0	14.0
56	423481.66	5411920.30	370.70	0	D	1000	110.4	0.0	0.0	0.0	0.0	87.1	23.3	-3.1	0.0	0.0	0.0	0.0	0.0	3.2
56	423481.66	5411920.30	370.70	0	D	2000	108.3	0.0	0.0	0.0	0.0	87.1	61.4	-3.1	0.0	0.0	0.0	0.0	0.0	-37.1
56	423481.66	5411920.30	370.70	0	D	4000	99.9	0.0	0.0	0.0	0.0	87.1	208.4	-3.1	0.0	0.0	0.0	0.0	0.0	-192.5

Point Source, ISO 9613, Name: "TD20", ID: ""																				
Nr.	X	Y	Z	Refl.	DEN	Freq.	Lw	l/a	Optime	K0	Dc	Adiv	Aatm	Agr	Afol	Ahous	Abar	Cmet	RL	Lr
	(m)	(m)	(m)			(Hz)	dB(A)	dB	dB	(dB)	(dB)	(dB)	(dB)	(dB)	(dB)	(dB)	(dB)	(dB)	(dB)	dB(A)
56	423481.66	5411920.30	370.70	0	D	8000	91.3	0.0	0.0	0.0	0.0	87.1	743.2	-3.1	0.0	0.0	0.0	0.0	0.0	-735.9
56	423481.66	5411920.30	370.70	0	N	32	68.0	0.0	0.0	0.0	0.0	87.1	0.2	-5.9	0.0	0.0	0.0	0.0	0.0	-13.4
56	423481.66	5411920.30	370.70	0	N	63	84.6	0.0	0.0	0.0	0.0	87.1	0.8	-5.9	0.0	0.0	0.0	0.0	0.0	2.6
56	423481.66	5411920.30	370.70	0	N	125	98.8	0.0	0.0	0.0	0.0	87.1	2.6	0.7	0.0	0.0	0.0	0.0	0.0	8.4
56	423481.66	5411920.30	370.70	0	N	250	105.0	0.0	0.0	0.0	0.0	87.1	6.6	-1.7	0.0	0.0	0.0	0.0	0.0	13.0
56	423481.66	5411920.30	370.70	0	N	500	110.2	0.0	0.0	0.0	0.0	87.1	12.3	-3.1	0.0	0.0	0.0	0.0	0.0	14.0
56	423481.66	5411920.30	370.70	0	N	1000	110.4	0.0	0.0	0.0	0.0	87.1	23.3	-3.1	0.0	0.0	0.0	0.0	0.0	3.2
56	423481.66	5411920.30	370.70	0	N	2000	108.3	0.0	0.0	0.0	0.0	87.1	61.4	-3.1	0.0	0.0	0.0	0.0	0.0	-37.1
56	423481.66	5411920.30	370.70	0	N	4000	99.9	0.0	0.0	0.0	0.0	87.1	208.4	-3.1	0.0	0.0	0.0	0.0	0.0	-192.5
56	423481.66	5411920.30	370.70	0	N	8000	91.3	0.0	0.0	0.0	0.0	87.1	743.2	-3.1	0.0	0.0	0.0	0.0	0.0	-735.9
56	423481.66	5411920.30	370.70	0	E	32	68.0	0.0	0.0	0.0	0.0	87.1	0.2	-5.9	0.0	0.0	0.0	0.0	0.0	-13.4
56	423481.66	5411920.30	370.70	0	E	63	84.6	0.0	0.0	0.0	0.0	87.1	0.8	-5.9	0.0	0.0	0.0	0.0	0.0	2.6
56	423481.66	5411920.30	370.70	0	E	125	98.8	0.0	0.0	0.0	0.0	87.1	2.6	0.7	0.0	0.0	0.0	0.0	0.0	8.4
56	423481.66	5411920.30	370.70	0	E	250	105.0	0.0	0.0	0.0	0.0	87.1	6.6	-1.7	0.0	0.0	0.0	0.0	0.0	13.0
56	423481.66	5411920.30	370.70	0	E	500	110.2	0.0	0.0	0.0	0.0	87.1	12.3	-3.1	0.0	0.0	0.0	0.0	0.0	14.0
56	423481.66	5411920.30	370.70	0	E	1000	110.4	0.0	0.0	0.0	0.0	87.1	23.3	-3.1	0.0	0.0	0.0	0.0	0.0	3.2
56	423481.66	5411920.30	370.70	0	E	2000	108.3	0.0	0.0	0.0	0.0	87.1	61.4	-3.1	0.0	0.0	0.0	0.0	0.0	-37.1
56	423481.66	5411920.30	370.70	0	E	4000	99.9	0.0	0.0	0.0	0.0	87.1	208.4	-3.1	0.0	0.0	0.0	0.0	0.0	-192.5
56	423481.66	5411920.30	370.70	0	E	8000	91.3	0.0	0.0	0.0	0.0	87.1	743.2	-3.1	0.0	0.0	0.0	0.0	0.0	-735.9

Point Source, ISO 9613, Name: "WL6", ID: ""																				
Nr.	X	Y	Z	Refl.	DEN	Freq.	Lw	l/a	Optime	K0	Dc	Adiv	Aatm	Agr	Afol	Ahous	Abar	Cmet	RL	Lr
	(m)	(m)	(m)			(Hz)	dB(A)	dB	dB	(dB)	(dB)	(dB)	(dB)	(dB)	(dB)	(dB)	(dB)	(dB)	(dB)	dB(A)
57	423531.25	5411432.97	364.00	0	DEN	32	79.1	0.0	0.0	0.0	0.0	86.5	0.2	-5.9	0.0	0.0	0.0	0.0	0.0	-1.7
57	423531.25	5411432.97	364.00	0	DEN	63	102.0	0.0	0.0	0.0	0.0	86.5	0.7	-5.9	0.0	0.0	0.0	0.0	0.0	20.7
57	423531.25	5411432.97	364.00	0	DEN	125	105.1	0.0	0.0	0.0	0.0	86.5	2.4	1.0	0.0	0.0	0.0	0.0	0.0	15.2
57	423531.25	5411432.97	364.00	0	DEN	250	101.4	0.0	0.0	0.0	0.0	86.5	6.2	-1.5	0.0	0.0	0.0	0.0	0.0	10.2
57	423531.25	5411432.97	364.00	0	DEN	500	107.6	0.0	0.0	0.0	0.0	86.5	11.5	-2.9	0.0	0.0	0.0	0.0	0.0	12.5
57	423531.25	5411432.97	364.00	0	DEN	1000	109.8	0.0	0.0	0.0	0.0	86.5	21.8	-2.9	0.0	0.0	0.0	0.0	0.0	4.4
57	423531.25	5411432.97	364.00	0	DEN	2000	106.3	0.0	0.0	0.0	0.0	86.5	57.5	-2.9	0.0	0.0	0.0	0.0	0.0	-34.9
57	423531.25	5411432.97	364.00	0	DEN	4000	100.5	0.0	0.0	0.0	0.0	86.5	195.1	-2.9	0.0	0.0	0.0	0.0	0.0	-178.2
57	423531.25	5411432.97	364.00	0	DEN	8000	92.9	0.0	0.0	0.0	0.0	86.5	695.8	-2.9	0.0	0.0	0.0	0.0	0.0	-686.5

Point Source, ISO 9613, Name: "WL3", ID: ""																				
Nr.	X	Y	Z	Refl.	DEN	Freq.	Lw	l/a	Optime	K0	Dc	Adiv	Aatm	Agr	Afol	Ahous	Abar	Cmet	RL	Lr
	(m)	(m)	(m)			(Hz)	dB(A)	dB	dB	(dB)	(dB)	(dB)	(dB)	(dB)	(dB)	(dB)	(dB)	(dB)	(dB)	dB(A)
58	423523.32	5411508.35	364.00	0	DEN	32	79.1	0.0	0.0	0.0	0.0	86.6	0.2	-5.9	0.0	0.0	0.0	0.0	0.0	-1.8
58	423523.32	5411508.35	364.00	0	DEN	63	102.0	0.0	0.0	0.0	0.0	86.6	0.7	-5.9	0.0	0.0	0.0	0.0	0.0	20.6
58	423523.32	5411508.35	364.00	0	DEN	125	105.1	0.0	0.0	0.0	0.0	86.6	2.5	1.0	0.0	0.0	0.0	0.0	0.0	15.1
58	423523.32	5411508.35	364.00	0	DEN	250	101.4	0.0	0.0	0.0	0.0	86.6	6.3	-1.5	0.0	0.0	0.0	0.0	0.0	10.0
58	423523.32	5411508.35	364.00	0	DEN	500	107.6	0.0	0.0	0.0	0.0	86.6	11.6	-2.9	0.0	0.0	0.0	0.0	0.0	12.3
58	423523.32	5411508.35	364.00	0	DEN	1000	109.8	0.0	0.0	0.0	0.0	86.6	22.0	-2.9	0.0	0.0	0.0	0.0	0.0	4.1
58	423523.32	5411508.35	364.00	0	DEN	2000	106.3	0.0	0.0	0.0	0.0	86.6	58.1	-2.9	0.0	0.0	0.0	0.0	0.0	-35.5
58	423523.32	5411508.35	364.00	0	DEN	4000	100.5	0.0	0.0	0.0	0.0	86.6	197.1	-2.9	0.0	0.0	0.0	0.0	0.0	-180.3
58	423523.32	5411508.35	364.00	0	DEN	8000	92.9	0.0	0.0	0.0	0.0	86.6	703.0	-2.9	0.0	0.0	0.0	0.0	0.0	-693.8

Point Source, ISO 9613, Name: "WP11", ID: ""																				
Nr.	X	Y	Z	Refl.	DEN	Freq.	Lw	l/a	Optime	K0	Dc	Adiv	Aatm	Agr	Afol	Ahous	Abar	Cmet	RL	Lr
	(m)	(m)	(m)			(Hz)	dB(A)	dB	dB	(dB)	(dB)	(dB)	(dB)	(dB)	(dB)	(dB)	(dB)	(dB)	(dB)	dB(A)
60	426316.27	5409233.06	364.28	0	DEN	32	60.3	0.0	0.0	0.0	0.0	79.1	0.1	-5.8	0.0	0.0	0.0	0.0	0.0	-13.1
60	426316.27	5409233.06	364.28	0	DEN	63	82.3	0.0	0.0	0.0	0.0	79.1	0.3	-5.8	0.0	0.0	0.0	0.0	0.0	8.7
60	426316.27	5409233.06	364.28	0	DEN	125	92.2	0.0	0.0	0.0	0.0	79.1	1.0	5.3	0.0	0.0	0.0	0.0	0.0	6.8
60	426316.27	5409233.06	364.28	0	DEN	250	88.5	0.0	0.0	0.0	0.0	79.1	2.7	3.5	0.0	0.0	0.0	0.0	0.0	3.2
60	426316.27	5409233.06	364.28	0	DEN	500	97.4	0.0	0.0	0.0	0.0	79.1	4.9	1.3	0.0	0.0	0.0	0.0	0.0	12.1
60	426316.27	5409233.06	364.28	0	DEN	1000	102.0	0.0	0.0	0.0	0.0	79.1	9.3	-0.6	0.0	0.0	0.0	0.0	0.0	14.1
60	426316.27	5409233.06	364.28	0	DEN	2000	101.9	0.0	0.0	0.0	0.0	79.1	24.6	-0.9	0.0	0.0	0.0	0.0	0.0	-1.0
60	426316.27	5409233.06	364.28	0	DEN	4000	94.5	0.0	0.0	0.0	0.0	79.1	83.5	-0.9	0.0	0.0	0.0	0.0	0.0	-67.2
60	426316.27	5409233.06	364.28	0	DEN	8000	88.6	0.0	0.0	0.0	0.0	79.1	297.7	-0.9	0.0	0.0	0.0	0.0	0.0	-287.4

Point Source, ISO 9613, Name: "WL4", ID: ""																				
Nr.	X	Y	Z	Refl.	DEN	Freq.	Lw	l/a	Optime	K0	Dc	Adiv	Aatm	Agr	Afol	Ahous	Abar	Cmet	RL	Lr
	(m)	(m)	(m)			(Hz)	dB(A)	dB	dB	(dB)	(dB)	(dB)	(dB)	(dB)	(dB)	(dB)	(dB)	(dB)	(dB)	dB(A)
61	423388.43	5411905.07	369.91	0	DEN	32	79.1	0.0	0.0	0.0	0.0	87.1	0.2	-5.9	0.0	0.0	0.0	0.0	0.0	-2.4
61	423388.43	5411905.07	369.91	0	DEN	63	102.0	0.0	0.0	0.0	0.0	87.1	0.8	-5.9	0.0	0.0	0.0	0.0	0.0	20.0

Point Source, ISO 9613, Name: "WL4", ID: ""																					
Nr.	X	Y	Z	Refl.	DEN	Freq.	Lw	l/a	Optime	K0	Dc	Adiv	Aatm	Agr	Afol	Ahous	Abar	Cmet	RL	Lr
	(m)	(m)	(m)			(Hz)	dB(A)	dB	dB	(dB)	(dB)	(dB)	(dB)	(dB)	(dB)	(dB)	(dB)	(dB)	(dB)	dB(A)
61	423388.43	5411905.07	369.91	0	DEN	125	105.1	0.0	0.0	0.0	0.0	87.1	2.6	0.8	0.0	0.0	0.0	0.0	0.0	14.6
61	423388.43	5411905.07	369.91	0	DEN	250	101.4	0.0	0.0	0.0	0.0	87.1	6.7	-1.7	0.0	0.0	0.0	0.0	0.0	9.3
61	423388.43	5411905.07	369.91	0	DEN	500	107.6	0.0	0.0	0.0	0.0	87.1	12.3	-3.1	0.0	0.0	0.0	0.0	0.0	11.2
61	423388.43	5411905.07	369.91	0	DEN	1000	109.8	0.0	0.0	0.0	0.0	87.1	23.4	-3.1	0.0	0.0	0.0	0.0	0.0	2.3
61	423388.43	5411905.07	369.91	0	DEN	2000	106.3	0.0	0.0	0.0	0.0	87.1	61.9	-3.1	0.0	0.0	0.0	0.0	0.0	-39.7
61	423388.43	5411905.07	369.91	0	DEN	4000	100.5	0.0	0.0	0.0	0.0	87.1	209.9	-3.1	0.0	0.0	0.0	0.0	0.0	-193.5
61	423388.43	5411905.07	369.91	0	DEN	8000	92.9	0.0	0.0	0.0	0.0	87.1	748.7	-3.1	0.0	0.0	0.0	0.0	0.0	-739.8

Point Source, ISO 9613, Name: "WP10", ID: ""																					
Nr.	X	Y	Z	Refl.	DEN	Freq.	Lw	l/a	Optime	K0	Dc	Adiv	Aatm	Agr	Afol	Ahous	Abar	Cmet	RL	Lr
	(m)	(m)	(m)			(Hz)	dB(A)	dB	dB	(dB)	(dB)	(dB)	(dB)	(dB)	(dB)	(dB)	(dB)	(dB)	(dB)	dB(A)
62	425959.96	5409059.13	357.24	0	DEN	32	60.3	0.0	0.0	0.0	0.0	79.2	0.1	-5.8	0.0	0.0	4.8	0.0	0.0	-18.0
62	425959.96	5409059.13	357.24	0	DEN	63	82.3	0.0	0.0	0.0	0.0	79.2	0.3	-5.8	0.0	0.0	4.8	0.0	0.0	3.8
62	425959.96	5409059.13	357.24	0	DEN	125	92.2	0.0	0.0	0.0	0.0	79.2	1.1	9.2	0.0	0.0	0.0	0.0	0.0	2.7
62	425959.96	5409059.13	357.24	0	DEN	250	88.5	0.0	0.0	0.0	0.0	79.2	2.7	8.4	0.0	0.0	0.0	0.0	0.0	-1.8
62	425959.96	5409059.13	357.24	0	DEN	500	97.4	0.0	0.0	0.0	0.0	79.2	5.0	5.0	0.0	0.0	0.0	0.0	0.0	8.2
62	425959.96	5409059.13	357.24	0	DEN	1000	102.0	0.0	0.0	0.0	0.0	79.2	9.4	0.7	0.0	0.0	4.1	0.0	0.0	8.6
62	425959.96	5409059.13	357.24	0	DEN	2000	101.9	0.0	0.0	0.0	0.0	79.2	24.9	-0.0	0.0	0.0	4.8	0.0	0.0	-7.0
62	425959.96	5409059.13	357.24	0	DEN	4000	94.5	0.0	0.0	0.0	0.0	79.2	84.6	-0.0	0.0	0.0	4.8	0.0	0.0	-74.1
62	425959.96	5409059.13	357.24	0	DEN	8000	88.6	0.0	0.0	0.0	0.0	79.2	301.6	-0.0	0.0	0.0	4.8	0.0	0.0	-297.0

Point Source, ISO 9613, Name: "TD10", ID: ""																					
Nr.	X	Y	Z	Refl.	DEN	Freq.	Lw	l/a	Optime	K0	Dc	Adiv	Aatm	Agr	Afol	Ahous	Abar	Cmet	RL	Lr
	(m)	(m)	(m)			(Hz)	dB(A)	dB	dB	(dB)	(dB)	(dB)	(dB)	(dB)	(dB)	(dB)	(dB)	(dB)	(dB)	dB(A)
63	428126.21	5409769.48	394.00	0	DEN	32	60.3	0.0	0.0	0.0	0.0	80.2	0.1	-5.7	0.0	0.0	4.8	0.0	0.0	-19.1
63	428126.21	5409769.48	394.00	0	DEN	63	77.5	0.0	0.0	0.0	0.0	80.2	0.4	-5.7	0.0	0.0	4.8	0.0	0.0	-2.1
63	428126.21	5409769.48	394.00	0	DEN	125	89.7	0.0	0.0	0.0	0.0	80.2	1.2	1.4	0.0	0.0	3.4	0.0	0.0	3.5
63	428126.21	5409769.48	394.00	0	DEN	250	95.9	0.0	0.0	0.0	0.0	80.2	3.0	-1.1	0.0	0.0	4.8	0.0	0.0	8.9
63	428126.21	5409769.48	394.00	0	DEN	500	101.1	0.0	0.0	0.0	0.0	80.2	5.6	-2.5	0.0	0.0	4.8	0.0	0.0	13.0
63	428126.21	5409769.48	394.00	0	DEN	1000	102.8	0.0	0.0	0.0	0.0	80.2	10.6	-2.5	0.0	0.0	4.8	0.0	0.0	9.6
63	428126.21	5409769.48	394.00	0	DEN	2000	100.6	0.0	0.0	0.0	0.0	80.2	28.0	-2.5	0.0	0.0	4.8	0.0	0.0	-10.0
63	428126.21	5409769.48	394.00	0	DEN	4000	94.1	0.0	0.0	0.0	0.0	80.2	95.0	-2.5	0.0	0.0	4.8	0.0	0.0	-83.4
63	428126.21	5409769.48	394.00	0	DEN	8000	83.5	0.0	0.0	0.0	0.0	80.2	338.7	-2.5	0.0	0.0	4.8	0.0	0.0	-337.7

Point Source, ISO 9613, Name: "WL5", ID: ""																					
Nr.	X	Y	Z	Refl.	DEN	Freq.	Lw	l/a	Optime	K0	Dc	Adiv	Aatm	Agr	Afol	Ahous	Abar	Cmet	RL	Lr
	(m)	(m)	(m)			(Hz)	dB(A)	dB	dB	(dB)	(dB)	(dB)	(dB)	(dB)	(dB)	(dB)	(dB)	(dB)	(dB)	dB(A)
64	422959.97	5411960.61	370.38	0	DEN	32	79.1	0.0	0.0	0.0	0.0	87.6	0.2	-5.9	0.0	0.0	0.0	0.0	0.0	-2.8
64	422959.97	5411960.61	370.38	0	DEN	63	102.0	0.0	0.0	0.0	0.0	87.6	0.8	-5.9	0.0	0.0	0.0	0.0	0.0	19.5
64	422959.97	5411960.61	370.38	0	DEN	125	105.1	0.0	0.0	0.0	0.0	87.6	2.8	1.0	0.0	0.0	0.0	0.0	0.0	13.8
64	422959.97	5411960.61	370.38	0	DEN	250	101.4	0.0	0.0	0.0	0.0	87.6	7.0	-1.5	0.0	0.0	0.0	0.0	0.0	8.3
64	422959.97	5411960.61	370.38	0	DEN	500	107.6	0.0	0.0	0.0	0.0	87.6	13.0	-2.9	0.0	0.0	0.0	0.0	0.0	10.0
64	422959.97	5411960.61	370.38	0	DEN	1000	109.8	0.0	0.0	0.0	0.0	87.6	24.6	-2.9	0.0	0.0	0.0	0.0	0.0	0.5
64	422959.97	5411960.61	370.38	0	DEN	2000	106.3	0.0	0.0	0.0	0.0	87.6	65.0	-2.9	0.0	0.0	0.0	0.0	0.0	-43.4
64	422959.97	5411960.61	370.38	0	DEN	4000	100.5	0.0	0.0	0.0	0.0	87.6	220.4	-2.9	0.0	0.0	0.0	0.0	0.0	-204.6
64	422959.97	5411960.61	370.38	0	DEN	8000	92.9	0.0	0.0	0.0	0.0	87.6	786.2	-2.9	0.0	0.0	0.0	0.0	0.0	-778.0

Point Source, ISO 9613, Name: "TD14", ID: ""																					
Nr.	X	Y	Z	Refl.	DEN	Freq.	Lw	l/a	Optime	K0	Dc	Adiv	Aatm	Agr	Afol	Ahous	Abar	Cmet	RL	Lr
	(m)	(m)	(m)			(Hz)	dB(A)	dB	dB	(dB)	(dB)	(dB)	(dB)	(dB)	(dB)	(dB)	(dB)	(dB)	(dB)	dB(A)
65	424194.32	5409598.40	361.04	0	DEN	32	60.4	0.0	0.0	0.0	0.0	83.5	0.1	-5.8	0.0	0.0	0.0	0.0	0.0	-17.4
65	424194.32	5409598.40	361.04	0	DEN	63	76.8	0.0	0.0	0.0	0.0	83.5	0.5	-5.8	0.0	0.0	0.0	0.0	0.0	-1.3
65	424194.32	5409598.40	361.04	0	DEN	125	90.3	0.0	0.0	0.0	0.0	83.5	1.7	7.8	0.0	0.0	0.0	0.0	0.0	-2.7
65	424194.32	5409598.40	361.04	0	DEN	250	98.5	0.0	0.0	0.0	0.0	83.5	4.4	3.4	0.0	0.0	0.0	0.0	0.0	7.2
65	424194.32	5409598.40	361.04	0	DEN	500	102.8	0.0	0.0	0.0	0.0	83.5	8.1	0.0	0.0	0.0	0.0	0.0	0.0	11.2
65	424194.32	5409598.40	361.04	0	DEN	1000	104.6	0.0	0.0	0.0	0.0	83.5	15.3	0.0	0.0	0.0	0.0	0.0	0.0	5.8
65	424194.32	5409598.40	361.04	0	DEN	2000	105.1	0.0	0.0	0.0	0.0	83.5	40.5	0.0	0.0	0.0	0.0	0.0	0.0	-18.9
65	424194.32	5409598.40	361.04	0	DEN	4000	101.2	0.0	0.0	0.0	0.0	83.5	137.5	0.0	0.0	0.0	0.0	0.0	0.0	-119.7
65	424194.32	5409598.40	361.04	0	DEN	8000	92.1	0.0	0.0	0.0	0.0	83.5	490.4	0.0	0.0	0.0	0.0	0.0	0.0	-481.7

Point Source, ISO 9613, Name: "TD15", ID: ""																					
Nr.	X	Y	Z	Refl.	DEN	Freq.	Lw	l/a	Optime	K0	Dc	Adiv	Aatm	Agr	Afol	Ahous	Abar	Cmet	RL	Lr
	(m)	(m)	(m)			(Hz)	dB(A)	dB	dB	(dB)	(dB)	(dB)	(dB)	(dB)	(dB)	(dB)	(dB)	(dB)	(dB)	dB(A)
66	425005.74	5410487.02	364.00	0	DEN	32	60.4	0.0	0.0	0.0	0.0	83.7	0.1	-5.8	0.0	0.0	4.8	0.0	0.0	-22.4

Point Source, ISO 9613, Name: "TD15", ID: ""																				
Nr.	X	Y	Z	Refl.	DEN	Freq.	Lw	l/a	Optime	K0	Dc	Adiv	Aatm	Agr	Afol	Ahous	Abar	Cmet	RL	Lr
	(m)	(m)	(m)			(Hz)	dB(A)	dB	dB	(dB)	(dB)	(dB)	(dB)	(dB)	(dB)	(dB)	(dB)	(dB)	(dB)	dB(A)
66	425005.74	5410487.02	364.00	0	DEN	63	76.8	0.0	0.0	0.0	0.0	83.7	0.5	-5.8	0.0	0.0	4.8	0.0	0.0	-6.3
66	425005.74	5410487.02	364.00	0	DEN	125	90.3	0.0	0.0	0.0	0.0	83.7	1.8	1.3	0.0	0.0	3.4	0.0	0.0	0.1
66	425005.74	5410487.02	364.00	0	DEN	250	98.5	0.0	0.0	0.0	0.0	83.7	4.5	-1.1	0.0	0.0	4.8	0.0	0.0	6.7
66	425005.74	5410487.02	364.00	0	DEN	500	102.8	0.0	0.0	0.0	0.0	83.7	8.3	-2.5	0.0	0.0	4.8	0.0	0.0	8.6
66	425005.74	5410487.02	364.00	0	DEN	1000	104.6	0.0	0.0	0.0	0.0	83.7	15.7	-2.5	0.0	0.0	4.8	0.0	0.0	2.9
66	425005.74	5410487.02	364.00	0	DEN	2000	105.1	0.0	0.0	0.0	0.0	83.7	41.5	-2.5	0.0	0.0	4.8	0.0	0.0	-22.4
66	425005.74	5410487.02	364.00	0	DEN	4000	101.2	0.0	0.0	0.0	0.0	83.7	140.8	-2.5	0.0	0.0	4.8	0.0	0.0	-125.6
66	425005.74	5410487.02	364.00	0	DEN	8000	92.1	0.0	0.0	0.0	0.0	83.7	502.3	-2.5	0.0	0.0	4.8	0.0	0.0	-496.2

Point Source, ISO 9613, Name: "TD13", ID: ""																				
Nr.	X	Y	Z	Refl.	DEN	Freq.	Lw	l/a	Optime	K0	Dc	Adiv	Aatm	Agr	Afol	Ahous	Abar	Cmet	RL	Lr
	(m)	(m)	(m)			(Hz)	dB(A)	dB	dB	(dB)	(dB)	(dB)	(dB)	(dB)	(dB)	(dB)	(dB)	(dB)	(dB)	dB(A)
67	423823.44	5409732.75	364.00	0	DEN	32	60.4	0.0	0.0	0.0	0.0	84.2	0.1	-5.8	0.0	0.0	0.0	0.0	0.0	-18.1
67	423823.44	5409732.75	364.00	0	DEN	63	76.8	0.0	0.0	0.0	0.0	84.2	0.6	-5.8	0.0	0.0	0.0	0.0	0.0	-2.1
67	423823.44	5409732.75	364.00	0	DEN	125	90.3	0.0	0.0	0.0	0.0	84.2	1.9	2.3	0.0	0.0	0.0	0.0	0.0	2.0
67	423823.44	5409732.75	364.00	0	DEN	250	98.5	0.0	0.0	0.0	0.0	84.2	4.8	-0.2	0.0	0.0	0.0	0.0	0.0	9.7
67	423823.44	5409732.75	364.00	0	DEN	500	102.8	0.0	0.0	0.0	0.0	84.2	8.8	-1.6	0.0	0.0	0.0	0.0	0.0	11.4
67	423823.44	5409732.75	364.00	0	DEN	1000	104.6	0.0	0.0	0.0	0.0	84.2	16.7	-1.6	0.0	0.0	0.0	0.0	0.0	5.3
67	423823.44	5409732.75	364.00	0	DEN	2000	105.1	0.0	0.0	0.0	0.0	84.2	44.2	-1.6	0.0	0.0	0.0	0.0	0.0	-21.7
67	423823.44	5409732.75	364.00	0	DEN	4000	101.2	0.0	0.0	0.0	0.0	84.2	149.8	-1.6	0.0	0.0	0.0	0.0	0.0	-131.1
67	423823.44	5409732.75	364.00	0	DEN	8000	92.1	0.0	0.0	0.0	0.0	84.2	534.1	-1.6	0.0	0.0	0.0	0.0	0.0	-524.6

Point Source, ISO 9613, Name: "WP09", ID: ""																				
Nr.	X	Y	Z	Refl.	DEN	Freq.	Lw	l/a	Optime	K0	Dc	Adiv	Aatm	Agr	Afol	Ahous	Abar	Cmet	RL	Lr
	(m)	(m)	(m)			(Hz)	dB(A)	dB	dB	(dB)	(dB)	(dB)	(dB)	(dB)	(dB)	(dB)	(dB)	(dB)	(dB)	dB(A)
68	425404.32	5409141.20	348.20	0	DEN	32	60.3	0.0	0.0	0.0	0.0	80.5	0.1	-5.8	0.0	0.0	4.8	0.0	0.0	-19.3
68	425404.32	5409141.20	348.20	0	DEN	63	82.3	0.0	0.0	0.0	0.0	80.5	0.4	-5.8	0.0	0.0	4.8	0.0	0.0	2.5
68	425404.32	5409141.20	348.20	0	DEN	125	92.2	0.0	0.0	0.0	0.0	80.5	1.2	9.2	0.0	0.0	0.0	0.0	0.0	1.3
68	425404.32	5409141.20	348.20	0	DEN	250	88.5	0.0	0.0	0.0	0.0	80.5	3.1	8.4	0.0	0.0	0.0	0.0	0.0	-3.6
68	425404.32	5409141.20	348.20	0	DEN	500	97.4	0.0	0.0	0.0	0.0	80.5	5.8	5.0	0.0	0.0	0.0	0.0	0.0	6.1
68	425404.32	5409141.20	348.20	0	DEN	1000	102.0	0.0	0.0	0.0	0.0	80.5	11.0	0.7	0.0	0.0	4.1	0.0	0.0	5.7
68	425404.32	5409141.20	348.20	0	DEN	2000	101.9	0.0	0.0	0.0	0.0	80.5	29.0	0.0	0.0	0.0	4.8	0.0	0.0	-12.4
68	425404.32	5409141.20	348.20	0	DEN	4000	94.5	0.0	0.0	0.0	0.0	80.5	98.2	0.0	0.0	0.0	4.8	0.0	0.0	-89.0
68	425404.32	5409141.20	348.20	0	DEN	8000	88.6	0.0	0.0	0.0	0.0	80.5	350.2	0.0	0.0	0.0	4.8	0.0	0.0	-346.9

Point Source, ISO 9613, Name: "WP06", ID: ""																				
Nr.	X	Y	Z	Refl.	DEN	Freq.	Lw	l/a	Optime	K0	Dc	Adiv	Aatm	Agr	Afol	Ahous	Abar	Cmet	RL	Lr
	(m)	(m)	(m)			(Hz)	dB(A)	dB	dB	(dB)	(dB)	(dB)	(dB)	(dB)	(dB)	(dB)	(dB)	(dB)	(dB)	dB(A)
73	425673.58	5409551.71	344.18	0	DEN	32	60.3	0.0	0.0	0.0	0.0	81.0	0.1	-5.8	0.0	0.0	11.1	0.0	0.0	-26.0
73	425673.58	5409551.71	344.18	0	DEN	63	82.3	0.0	0.0	0.0	0.0	81.0	0.4	-5.8	0.0	0.0	13.5	0.0	0.0	-6.7
73	425673.58	5409551.71	344.18	0	DEN	125	92.2	0.0	0.0	0.0	0.0	81.0	1.3	2.0	0.0	0.0	14.2	0.0	0.0	-6.3
73	425673.58	5409551.71	344.18	0	DEN	250	88.5	0.0	0.0	0.0	0.0	81.0	3.3	-0.5	0.0	0.0	19.1	0.0	0.0	-14.3
73	425673.58	5409551.71	344.18	0	DEN	500	97.4	0.0	0.0	0.0	0.0	81.0	6.1	-1.9	0.0	0.0	20.0	0.0	0.0	-7.8
73	425673.58	5409551.71	344.18	0	DEN	1000	102.0	0.0	0.0	0.0	0.0	81.0	11.5	-1.9	0.0	0.0	20.0	0.0	0.0	-8.6
73	425673.58	5409551.71	344.18	0	DEN	2000	101.9	0.0	0.0	0.0	0.0	81.0	30.4	-1.9	0.0	0.0	20.0	0.0	0.0	-27.6
73	425673.58	5409551.71	344.18	0	DEN	4000	94.5	0.0	0.0	0.0	0.0	81.0	103.2	-1.9	0.0	0.0	20.0	0.0	0.0	-107.8
73	425673.58	5409551.71	344.18	0	DEN	8000	88.6	0.0	0.0	0.0	0.0	81.0	368.0	-1.9	0.0	0.0	20.0	0.0	0.0	-378.5

Point Source, ISO 9613, Name: "WP04", ID: ""																				
Nr.	X	Y	Z	Refl.	DEN	Freq.	Lw	l/a	Optime	K0	Dc	Adiv	Aatm	Agr	Afol	Ahous	Abar	Cmet	RL	Lr
	(m)	(m)	(m)			(Hz)	dB(A)	dB	dB	(dB)	(dB)	(dB)	(dB)	(dB)	(dB)	(dB)	(dB)	(dB)	(dB)	dB(A)
74	425649.94	5409592.52	196.50	0	DEN	32	60.3	0.0	0.0	0.0	0.0	81.1	0.1	-5.8	0.0	0.0	17.8	0.0	0.0	-32.9
74	425649.94	5409592.52	196.50	0	DEN	63	82.3	0.0	0.0	0.0	0.0	81.1	0.4	-5.8	0.0	0.0	20.0	0.0	0.0	-13.4
74	425649.94	5409592.52	196.50	0	DEN	125	92.2	0.0	0.0	0.0	0.0	81.1	1.3	2.2	0.0	0.0	17.8	0.0	0.0	-10.2
74	425649.94	5409592.52	196.50	0	DEN	250	88.5	0.0	0.0	0.0	0.0	81.1	3.3	-0.2	0.0	0.0	20.0	0.0	0.0	-15.7
74	425649.94	5409592.52	196.50	0	DEN	500	97.4	0.0	0.0	0.0	0.0	81.1	6.2	-1.7	0.0	0.0	20.0	0.0	0.0	-8.2
74	425649.94	5409592.52	196.50	0	DEN	1000	102.0	0.0	0.0	0.0	0.0	81.1	11.7	-1.8	0.0	0.0	20.0	0.0	0.0	-9.0
74	425649.94	5409592.52	196.50	0	DEN	2000	101.9	0.0	0.0	0.0	0.0	81.1	30.9	-1.9	0.0	0.0	20.0	0.0	0.0	-28.3
74	425649.94	5409592.52	196.50	0	DEN	4000	94.5	0.0	0.0	0.0	0.0	81.1	104.9	-1.9	0.0	0.0	20.0	0.0	0.0	-109.6
74	425649.94	5409592.52	196.50	0	DEN	8000	88.6	0.0	0.0	0.0	0.0	81.1	374.0	-1.9	0.0	0.0	20.0	0.0	0.0	-384.7

Point Source, ISO 9613, Name: "WP03", ID: ""																					
Nr.	X	Y	Z	Refl.	DEN	Freq.	Lw	l/a	Optime	K0	Dc	Adiv	Aatm	Agr	Afol	Ahous	Abar	Cmet	RL	Lr
	(m)	(m)	(m)			(Hz)	dB(A)	dB	dB	(dB)	(dB)	(dB)	(dB)	(dB)	(dB)	(dB)	(dB)	(dB)	(dB)	dB(A)
75	425653.45	5409607.97	196.50	0	DEN	32	60.3	0.0	0.0	0.0	0.0	81.1	0.1	-5.8	0.0	0.0	17.1	0.0	0.0	-32.2
75	425653.45	5409607.97	196.50	0	DEN	63	82.3	0.0	0.0	0.0	0.0	81.1	0.4	-5.8	0.0	0.0	20.0	0.0	0.0	-13.4
75	425653.45	5409607.97	196.50	0	DEN	125	92.2	0.0	0.0	0.0	0.0	81.1	1.3	1.9	0.0	0.0	18.1	0.0	0.0	-10.3
75	425653.45	5409607.97	196.50	0	DEN	250	88.5	0.0	0.0	0.0	0.0	81.1	3.4	-0.5	0.0	0.0	20.0	0.0	0.0	-15.5
75	425653.45	5409607.97	196.50	0	DEN	500	97.4	0.0	0.0	0.0	0.0	81.1	6.2	-1.9	0.0	0.0	20.0	0.0	0.0	-8.0
75	425653.45	5409607.97	196.50	0	DEN	1000	102.0	0.0	0.0	0.0	0.0	81.1	11.7	-1.9	0.0	0.0	20.0	0.0	0.0	-9.0
75	425653.45	5409607.97	196.50	0	DEN	2000	101.9	0.0	0.0	0.0	0.0	81.1	31.0	-1.9	0.0	0.0	20.0	0.0	0.0	-28.3
75	425653.45	5409607.97	196.50	0	DEN	4000	94.5	0.0	0.0	0.0	0.0	81.1	105.2	-1.9	0.0	0.0	20.0	0.0	0.0	-109.9
75	425653.45	5409607.97	196.50	0	DEN	8000	88.6	0.0	0.0	0.0	0.0	81.1	375.3	-1.9	0.0	0.0	20.0	0.0	0.0	-385.9

Point Source, ISO 9613, Name: "WP05", ID: ""																					
Nr.	X	Y	Z	Refl.	DEN	Freq.	Lw	l/a	Optime	K0	Dc	Adiv	Aatm	Agr	Afol	Ahous	Abar	Cmet	RL	Lr
	(m)	(m)	(m)			(Hz)	dB(A)	dB	dB	(dB)	(dB)	(dB)	(dB)	(dB)	(dB)	(dB)	(dB)	(dB)	(dB)	dB(A)
76	425572.07	5409551.58	197.22	0	DEN	32	60.3	0.0	0.0	0.0	0.0	81.1	0.1	-5.8	0.0	0.0	19.5	0.0	0.0	-34.6
76	425572.07	5409551.58	197.22	0	DEN	63	82.3	0.0	0.0	0.0	0.0	81.1	0.4	-5.8	0.0	0.0	20.0	0.0	0.0	-13.4
76	425572.07	5409551.58	197.22	0	DEN	125	92.2	0.0	0.0	0.0	0.0	81.1	1.3	2.1	0.0	0.0	17.9	0.0	0.0	-10.3
76	425572.07	5409551.58	197.22	0	DEN	250	88.5	0.0	0.0	0.0	0.0	81.1	3.4	-0.4	0.0	0.0	20.0	0.0	0.0	-15.6
76	425572.07	5409551.58	197.22	0	DEN	500	97.4	0.0	0.0	0.0	0.0	81.1	6.2	-1.8	0.0	0.0	20.0	0.0	0.0	-8.1
76	425572.07	5409551.58	197.22	0	DEN	1000	102.0	0.0	0.0	0.0	0.0	81.1	11.7	-1.8	0.0	0.0	20.0	0.0	0.0	-9.0
76	425572.07	5409551.58	197.22	0	DEN	2000	101.9	0.0	0.0	0.0	0.0	81.1	31.0	-1.8	0.0	0.0	20.0	0.0	0.0	-28.4
76	425572.07	5409551.58	197.22	0	DEN	4000	94.5	0.0	0.0	0.0	0.0	81.1	105.2	-1.8	0.0	0.0	20.0	0.0	0.0	-110.0
76	425572.07	5409551.58	197.22	0	DEN	8000	88.6	0.0	0.0	0.0	0.0	81.1	375.3	-1.8	0.0	0.0	20.0	0.0	0.0	-386.0

Point Source, ISO 9613, Name: "TD16", ID: ""																					
Nr.	X	Y	Z	Refl.	DEN	Freq.	Lw	l/a	Optime	K0	Dc	Adiv	Aatm	Agr	Afol	Ahous	Abar	Cmet	RL	Lr
	(m)	(m)	(m)			(Hz)	dB(A)	dB	dB	(dB)	(dB)	(dB)	(dB)	(dB)	(dB)	(dB)	(dB)	(dB)	(dB)	dB(A)
77	423780.87	5410394.72	364.00	0	DEN	32	60.4	0.0	0.0	0.0	0.0	85.0	0.2	-5.8	0.0	0.0	0.0	0.0	0.0	-18.9
77	423780.87	5410394.72	364.00	0	DEN	63	76.8	0.0	0.0	0.0	0.0	85.0	0.6	-5.8	0.0	0.0	0.0	0.0	0.0	-3.0
77	423780.87	5410394.72	364.00	0	DEN	125	90.3	0.0	0.0	0.0	0.0	85.0	2.1	2.0	0.0	0.0	0.0	0.0	0.0	1.2
77	423780.87	5410394.72	364.00	0	DEN	250	98.5	0.0	0.0	0.0	0.0	85.0	5.2	-0.4	0.0	0.0	0.0	0.0	0.0	8.7
77	423780.87	5410394.72	364.00	0	DEN	500	102.8	0.0	0.0	0.0	0.0	85.0	9.7	-1.8	0.0	0.0	0.0	0.0	0.0	9.9
77	423780.87	5410394.72	364.00	0	DEN	1000	104.6	0.0	0.0	0.0	0.0	85.0	18.4	-1.8	0.0	0.0	0.0	0.0	0.0	3.0
77	423780.87	5410394.72	364.00	0	DEN	2000	105.1	0.0	0.0	0.0	0.0	85.0	48.6	-1.8	0.0	0.0	0.0	0.0	0.0	-26.7
77	423780.87	5410394.72	364.00	0	DEN	4000	101.2	0.0	0.0	0.0	0.0	85.0	164.9	-1.8	0.0	0.0	0.0	0.0	0.0	-146.9
77	423780.87	5410394.72	364.00	0	DEN	8000	92.1	0.0	0.0	0.0	0.0	85.0	588.1	-1.8	0.0	0.0	0.0	0.0	0.0	-579.2

Point Source, ISO 9613, Name: "WP02", ID: ""																					
Nr.	X	Y	Z	Refl.	DEN	Freq.	Lw	l/a	Optime	K0	Dc	Adiv	Aatm	Agr	Afol	Ahous	Abar	Cmet	RL	Lr
	(m)	(m)	(m)			(Hz)	dB(A)	dB	dB	(dB)	(dB)	(dB)	(dB)	(dB)	(dB)	(dB)	(dB)	(dB)	(dB)	dB(A)
78	425585.40	5409665.71	190.88	0	DEN	32	60.3	0.0	0.0	0.0	0.0	81.4	0.1	-5.8	0.0	0.0	13.9	0.0	0.0	-29.2
78	425585.40	5409665.71	190.88	0	DEN	63	82.3	0.0	0.0	0.0	0.0	81.4	0.4	-5.8	0.0	0.0	16.6	0.0	0.0	-10.3
78	425585.40	5409665.71	190.88	0	DEN	125	92.2	0.0	0.0	0.0	0.0	81.4	1.4	1.9	0.0	0.0	17.6	0.0	0.0	-10.0
78	425585.40	5409665.71	190.88	0	DEN	250	88.5	0.0	0.0	0.0	0.0	81.4	3.4	-0.6	0.0	0.0	20.0	0.0	0.0	-15.7
78	425585.40	5409665.71	190.88	0	DEN	500	97.4	0.0	0.0	0.0	0.0	81.4	6.4	-2.0	0.0	0.0	20.0	0.0	0.0	-8.4
78	425585.40	5409665.71	190.88	0	DEN	1000	102.0	0.0	0.0	0.0	0.0	81.4	12.1	-2.0	0.0	0.0	20.0	0.0	0.0	-9.5
78	425585.40	5409665.71	190.88	0	DEN	2000	101.9	0.0	0.0	0.0	0.0	81.4	31.9	-2.0	0.0	0.0	20.0	0.0	0.0	-29.4
78	425585.40	5409665.71	190.88	0	DEN	4000	94.5	0.0	0.0	0.0	0.0	81.4	108.0	-2.0	0.0	0.0	20.0	0.0	0.0	-112.9
78	425585.40	5409665.71	190.88	0	DEN	8000	88.6	0.0	0.0	0.0	0.0	81.4	385.4	-2.0	0.0	0.0	20.0	0.0	0.0	-396.2

Point Source, ISO 9613, Name: "WP01", ID: ""																					
Nr.	X	Y	Z	Refl.	DEN	Freq.	Lw	l/a	Optime	K0	Dc	Adiv	Aatm	Agr	Afol	Ahous	Abar	Cmet	RL	Lr
	(m)	(m)	(m)			(Hz)	dB(A)	dB	dB	(dB)	(dB)	(dB)	(dB)	(dB)	(dB)	(dB)	(dB)	(dB)	(dB)	dB(A)
80	425523.49	5409667.40	181.50	0	DEN	32	60.3	0.0	0.0	0.0	0.0	81.5	0.1	-5.8	0.0	0.0	13.8	0.0	0.0	-29.2
80	425523.49	5409667.40	181.50	0	DEN	63	82.3	0.0	0.0	0.0	0.0	81.5	0.4	-5.8	0.0	0.0	16.5	0.0	0.0	-10.2
80	425523.49	5409667.40	181.50	0	DEN	125	92.2	0.0	0.0	0.0	0.0	81.5	1.4	1.9	0.0	0.0	17.4	0.0	0.0	-9.9
80	425523.49	5409667.40	181.50	0	DEN	250	88.5	0.0	0.0	0.0	0.0	81.5	3.5	-0.6	0.0	0.0	20.0	0.0	0.0	-15.9
80	425523.49	5409667.40	181.50	0	DEN	500	97.4	0.0	0.0	0.0	0.0	81.5	6.4	-2.0	0.0	0.0	20.0	0.0	0.0	-8.5
80	425523.49	5409667.40	181.50	0	DEN	1000	102.0	0.0	0.0	0.0	0.0	81.5	12.2	-2.0	0.0	0.0	20.0	0.0	0.0	-9.7
80	425523.49	5409667.40	181.50	0	DEN	2000	101.9	0.0	0.0	0.0	0.0	81.5	32.2	-2.0	0.0	0.0	20.0	0.0	0.0	-29.8
80	425523.49	5409667.40	181.50	0	DEN	4000	94.5	0.0	0.0	0.0	0.0	81.5	109.3	-2.0	0.0	0.0	20.0	0.0	0.0	-114.3
80	425523.49	5409667.40	181.50	0	DEN	8000	88.6	0.0	0.0	0.0	0.0	81.5	389.7	-2.0	0.0	0.0	20.0	0.0	0.0	-400.6

Point Source, ISO 9613, Name: "WP07", ID: ""																					
Nr.	X	Y	Z	Refl.	DEN	Freq.	Lw	l/a	Optime	K0	Dc	Adiv	Aatm	Agr	Afol	Ahous	Abar	Cmet	RL	Lr
	(m)	(m)	(m)			(Hz)	dB(A)	dB	dB	(dB)	(dB)	(dB)	(dB)	(dB)	(dB)	(dB)	(dB)	(dB)	(dB)	dB(A)
82	425425.27	5409706.63	191.49	0	DEN	32	60.3	0.0	0.0	0.0	0.0	81.7	0.1	-5.8	0.0	0.0	11.6	0.0	0.0	-27.3
82	425425.27	5409706.63	191.49	0	DEN	63	82.3	0.0	0.0	0.0	0.0	81.7	0.4	-5.8	0.0	0.0	14.1	0.0	0.0	-8.1
82	425425.27	5409706.63	191.49	0	DEN	125	92.2	0.0	0.0	0.0	0.0	81.7	1.4	1.9	0.0	0.0	15.0	0.0	0.0	-7.8
82	425425.27	5409706.63	191.49	0	DEN	250	88.5	0.0	0.0	0.0	0.0	81.7	3.6	-0.6	0.0	0.0	19.7	0.0	0.0	-15.9
82	425425.27	5409706.63	191.49	0	DEN	500	97.4	0.0	0.0	0.0	0.0	81.7	6.6	-2.0	0.0	0.0	20.0	0.0	0.0	-8.9
82	425425.27	5409706.63	191.49	0	DEN	1000	102.0	0.0	0.0	0.0	0.0	81.7	12.5	-2.0	0.0	0.0	20.0	0.0	0.0	-10.2
82	425425.27	5409706.63	191.49	0	DEN	2000	101.9	0.0	0.0	0.0	0.0	81.7	33.1	-2.0	0.0	0.0	20.0	0.0	0.0	-30.9
82	425425.27	5409706.63	191.49	0	DEN	4000	94.5	0.0	0.0	0.0	0.0	81.7	112.2	-2.0	0.0	0.0	20.0	0.0	0.0	-117.4
82	425425.27	5409706.63	191.49	0	DEN	8000	88.6	0.0	0.0	0.0	0.0	81.7	400.1	-2.0	0.0	0.0	20.0	0.0	0.0	-411.2

Point Source, ISO 9613, Name: "WP08", ID: ""																					
Nr.	X	Y	Z	Refl.	DEN	Freq.	Lw	l/a	Optime	K0	Dc	Adiv	Aatm	Agr	Afol	Ahous	Abar	Cmet	RL	Lr
	(m)	(m)	(m)			(Hz)	dB(A)	dB	dB	(dB)	(dB)	(dB)	(dB)	(dB)	(dB)	(dB)	(dB)	(dB)	(dB)	dB(A)
83	425396.07	5409698.05	193.72	0	DEN	32	60.3	0.0	0.0	0.0	0.0	81.7	0.1	-5.8	0.0	0.0	12.5	0.0	0.0	-28.2
83	425396.07	5409698.05	193.72	0	DEN	63	82.3	0.0	0.0	0.0	0.0	81.7	0.4	-5.8	0.0	0.0	15.1	0.0	0.0	-9.1
83	425396.07	5409698.05	193.72	0	DEN	125	92.2	0.0	0.0	0.0	0.0	81.7	1.4	1.8	0.0	0.0	16.1	0.0	0.0	-8.8
83	425396.07	5409698.05	193.72	0	DEN	250	88.5	0.0	0.0	0.0	0.0	81.7	3.6	-0.6	0.0	0.0	20.0	0.0	0.0	-16.2
83	425396.07	5409698.05	193.72	0	DEN	500	97.4	0.0	0.0	0.0	0.0	81.7	6.6	-2.0	0.0	0.0	20.0	0.0	0.0	-8.9
83	425396.07	5409698.05	193.72	0	DEN	1000	102.0	0.0	0.0	0.0	0.0	81.7	12.6	-2.0	0.0	0.0	20.0	0.0	0.0	-10.3
83	425396.07	5409698.05	193.72	0	DEN	2000	101.9	0.0	0.0	0.0	0.0	81.7	33.2	-2.0	0.0	0.0	20.0	0.0	0.0	-31.0
83	425396.07	5409698.05	193.72	0	DEN	4000	94.5	0.0	0.0	0.0	0.0	81.7	112.5	-2.0	0.0	0.0	20.0	0.0	0.0	-117.7
83	425396.07	5409698.05	193.72	0	DEN	8000	88.6	0.0	0.0	0.0	0.0	81.7	401.3	-2.0	0.0	0.0	20.0	0.0	0.0	-412.4

Point Source, ISO 9613, Name: "WP19", ID: ""																					
Nr.	X	Y	Z	Refl.	DEN	Freq.	Lw	l/a	Optime	K0	Dc	Adiv	Aatm	Agr	Afol	Ahous	Abar	Cmet	RL	Lr
	(m)	(m)	(m)			(Hz)	dB(A)	dB	dB	(dB)	(dB)	(dB)	(dB)	(dB)	(dB)	(dB)	(dB)	(dB)	(dB)	dB(A)
88	426445.21	5410424.32	365.38	0	DEN	32	60.3	0.0	0.0	0.0	0.0	82.2	0.1	-5.9	0.0	0.0	4.8	0.0	0.0	-20.9
88	426445.21	5410424.32	365.38	0	DEN	63	82.3	0.0	0.0	0.0	0.0	82.2	0.4	-5.9	0.0	0.0	4.8	0.0	0.0	0.8
88	426445.21	5410424.32	365.38	0	DEN	125	92.2	0.0	0.0	0.0	0.0	82.2	1.5	8.1	0.0	0.0	0.0	0.0	0.0	0.4
88	426445.21	5410424.32	365.38	0	DEN	250	88.5	0.0	0.0	0.0	0.0	82.2	3.8	7.4	0.0	0.0	0.0	0.0	0.0	-4.8
88	426445.21	5410424.32	365.38	0	DEN	500	97.4	0.0	0.0	0.0	0.0	82.2	7.0	3.9	0.0	0.0	0.8	0.0	0.0	3.5
88	426445.21	5410424.32	365.38	0	DEN	1000	102.0	0.0	0.0	0.0	0.0	82.2	13.2	-0.4	0.0	0.0	4.8	0.0	0.0	2.2
88	426445.21	5410424.32	365.38	0	DEN	2000	101.9	0.0	0.0	0.0	0.0	82.2	34.9	-1.0	0.0	0.0	4.8	0.0	0.0	-18.9
88	426445.21	5410424.32	365.38	0	DEN	4000	94.5	0.0	0.0	0.0	0.0	82.2	118.5	-1.0	0.0	0.0	4.8	0.0	0.0	-109.9
88	426445.21	5410424.32	365.38	0	DEN	8000	88.6	0.0	0.0	0.0	0.0	82.2	422.5	-1.0	0.0	0.0	4.8	0.0	0.0	-419.8

Point Source, ISO 9613, Name: "WP13", ID: ""																					
Nr.	X	Y	Z	Refl.	DEN	Freq.	Lw	l/a	Optime	K0	Dc	Adiv	Aatm	Agr	Afol	Ahous	Abar	Cmet	RL	Lr
	(m)	(m)	(m)			(Hz)	dB(A)	dB	dB	(dB)	(dB)	(dB)	(dB)	(dB)	(dB)	(dB)	(dB)	(dB)	(dB)	dB(A)
89	424459.30	5409308.63	348.69	0	DEN	32	60.3	0.0	0.0	0.0	0.0	82.6	0.1	-5.9	0.0	0.0	4.8	0.0	0.0	-21.3
89	424459.30	5409308.63	348.69	0	DEN	63	82.3	0.0	0.0	0.0	0.0	82.6	0.5	-5.9	0.0	0.0	4.8	0.0	0.0	0.3
89	424459.30	5409308.63	348.69	0	DEN	125	92.2	0.0	0.0	0.0	0.0	82.6	1.6	9.2	0.0	0.0	0.0	0.0	0.0	-1.2
89	424459.30	5409308.63	348.69	0	DEN	250	88.5	0.0	0.0	0.0	0.0	82.6	4.0	8.4	0.0	0.0	0.0	0.0	0.0	-6.5
89	424459.30	5409308.63	348.69	0	DEN	500	97.4	0.0	0.0	0.0	0.0	82.6	7.3	5.0	0.0	0.0	0.0	0.0	0.0	2.5
89	424459.30	5409308.63	348.69	0	DEN	1000	102.0	0.0	0.0	0.0	0.0	82.6	13.9	0.7	0.0	0.0	4.1	0.0	0.0	0.7
89	424459.30	5409308.63	348.69	0	DEN	2000	101.9	0.0	0.0	0.0	0.0	82.6	36.8	0.0	0.0	0.0	4.8	0.0	0.0	-22.3
89	424459.30	5409308.63	348.69	0	DEN	4000	94.5	0.0	0.0	0.0	0.0	82.6	124.8	0.0	0.0	0.0	4.8	0.0	0.0	-117.7
89	424459.30	5409308.63	348.69	0	DEN	8000	88.6	0.0	0.0	0.0	0.0	82.6	445.0	0.0	0.0	0.0	4.8	0.0	0.0	-443.8

Point Source, ISO 9613, Name: "WP16", ID: ""																					
Nr.	X	Y	Z	Refl.	DEN	Freq.	Lw	l/a	Optime	K0	Dc	Adiv	Aatm	Agr	Afol	Ahous	Abar	Cmet	RL	Lr
	(m)	(m)	(m)			(Hz)	dB(A)	dB	dB	(dB)	(dB)	(dB)	(dB)	(dB)	(dB)	(dB)	(dB)	(dB)	(dB)	dB(A)
91	425369.52	5410194.45	330.82	0	DEN	32	60.3	0.0	0.0	0.0	0.0	82.7	0.1	-5.9	0.0	0.0	4.8	0.0	0.0	-21.4
91	425369.52	5410194.45	330.82	0	DEN	63	82.3	0.0	0.0	0.0	0.0	82.7	0.5	-5.9	0.0	0.0	4.8	0.0	0.0	0.2
91	425369.52	5410194.45	330.82	0	DEN	125	92.2	0.0	0.0	0.0	0.0	82.7	1.6	1.4	0.0	0.0	3.3	0.0	0.0	3.1
91	425369.52	5410194.45	330.82	0	DEN	250	88.5	0.0	0.0	0.0	0.0	82.7	4.0	-1.0	0.0	0.0	4.8	0.0	0.0	-2.0
91	425369.52	5410194.45	330.82	0	DEN	500	97.4	0.0	0.0	0.0	0.0	82.7	7.4	-2.4	0.0	0.0	4.8	0.0	0.0	4.9
91	425369.52	5410194.45	330.82	0	DEN	1000	102.0	0.0	0.0	0.0	0.0	82.7	14.1	-2.4	0.0	0.0	4.8	0.0	0.0	2.8
91	425369.52	5410194.45	330.82	0	DEN	2000	101.9	0.0	0.0	0.0	0.0	82.7	37.2	-2.4	0.0	0.0	4.8	0.0	0.0	-20.4
91	425369.52	5410194.45	330.82	0	DEN	4000	94.5	0.0	0.0	0.0	0.0	82.7	126.3	-2.4	0.0	0.0	4.8	0.0	0.0	-116.9
91	425369.52	5410194.45	330.82	0	DEN	8000	88.6	0.0	0.0	0.0	0.0	82.7	450.3	-2.4	0.0	0.0	4.8	0.0	0.0	-446.8

Point Source, ISO 9613, Name: "TD19", ID: ""																				
Nr.	X	Y	Z	Refl.	DEN	Freq.	Lw	l/a	Optime	K0	Dc	Adiv	Aatm	Agr	Afol	Ahous	Abar	Cmet	RL	Lr
	(m)	(m)	(m)			(Hz)	dB(A)	dB	dB	(dB)	(dB)	(dB)	(dB)	(dB)	(dB)	(dB)	(dB)	(dB)	(dB)	dB(A)
92	424007.62	5411921.35	368.71	0	D	32	60.4	0.0	0.0	0.0	0.0	86.6	0.2	-5.9	0.0	0.0	4.8	0.0	0.0	-25.3
92	424007.62	5411921.35	368.71	0	D	63	76.8	0.0	0.0	0.0	0.0	86.6	0.7	-5.9	0.0	0.0	4.8	0.0	0.0	-9.5
92	424007.62	5411921.35	368.71	0	D	125	90.3	0.0	0.0	0.0	0.0	86.6	2.5	0.8	0.0	0.0	3.9	0.0	0.0	-3.6
92	424007.62	5411921.35	368.71	0	D	250	98.5	0.0	0.0	0.0	0.0	86.6	6.3	-1.6	0.0	0.0	4.8	0.0	0.0	2.4
92	424007.62	5411921.35	368.71	0	D	500	102.8	0.0	0.0	0.0	0.0	86.6	11.7	-3.0	0.0	0.0	4.8	0.0	0.0	2.7
92	424007.62	5411921.35	368.71	0	D	1000	104.6	0.0	0.0	0.0	0.0	86.6	22.1	-3.0	0.0	0.0	4.8	0.0	0.0	-5.9
92	424007.62	5411921.35	368.71	0	D	2000	105.1	0.0	0.0	0.0	0.0	86.6	58.4	-3.0	0.0	0.0	4.8	0.0	0.0	-41.7
92	424007.62	5411921.35	368.71	0	D	4000	101.2	0.0	0.0	0.0	0.0	86.6	198.1	-3.0	0.0	0.0	4.8	0.0	0.0	-185.3
92	424007.62	5411921.35	368.71	0	D	8000	92.1	0.0	0.0	0.0	0.0	86.6	706.6	-3.0	0.0	0.0	4.8	0.0	0.0	-702.9
92	424007.62	5411921.35	368.71	0	N	32	60.4	0.0	0.0	0.0	0.0	86.6	0.2	-5.9	0.0	0.0	4.8	0.0	0.0	-25.3
92	424007.62	5411921.35	368.71	0	N	63	76.8	0.0	0.0	0.0	0.0	86.6	0.7	-5.9	0.0	0.0	4.8	0.0	0.0	-9.5
92	424007.62	5411921.35	368.71	0	N	125	90.3	0.0	0.0	0.0	0.0	86.6	2.5	0.8	0.0	0.0	3.9	0.0	0.0	-3.6
92	424007.62	5411921.35	368.71	0	N	250	98.5	0.0	0.0	0.0	0.0	86.6	6.3	-1.6	0.0	0.0	4.8	0.0	0.0	2.4
92	424007.62	5411921.35	368.71	0	N	500	102.8	0.0	0.0	0.0	0.0	86.6	11.7	-3.0	0.0	0.0	4.8	0.0	0.0	2.7
92	424007.62	5411921.35	368.71	0	N	1000	104.6	0.0	0.0	0.0	0.0	86.6	22.1	-3.0	0.0	0.0	4.8	0.0	0.0	-5.9
92	424007.62	5411921.35	368.71	0	N	2000	105.1	0.0	0.0	0.0	0.0	86.6	58.4	-3.0	0.0	0.0	4.8	0.0	0.0	-41.7
92	424007.62	5411921.35	368.71	0	N	4000	101.2	0.0	0.0	0.0	0.0	86.6	198.1	-3.0	0.0	0.0	4.8	0.0	0.0	-185.3
92	424007.62	5411921.35	368.71	0	N	8000	92.1	0.0	0.0	0.0	0.0	86.6	706.6	-3.0	0.0	0.0	4.8	0.0	0.0	-702.9
92	424007.62	5411921.35	368.71	0	E	32	60.4	0.0	0.0	0.0	0.0	86.6	0.2	-5.9	0.0	0.0	4.8	0.0	0.0	-25.3
92	424007.62	5411921.35	368.71	0	E	63	76.8	0.0	0.0	0.0	0.0	86.6	0.7	-5.9	0.0	0.0	4.8	0.0	0.0	-9.5
92	424007.62	5411921.35	368.71	0	E	125	90.3	0.0	0.0	0.0	0.0	86.6	2.5	0.8	0.0	0.0	3.9	0.0	0.0	-3.6
92	424007.62	5411921.35	368.71	0	E	250	98.5	0.0	0.0	0.0	0.0	86.6	6.3	-1.6	0.0	0.0	4.8	0.0	0.0	2.4
92	424007.62	5411921.35	368.71	0	E	500	102.8	0.0	0.0	0.0	0.0	86.6	11.7	-3.0	0.0	0.0	4.8	0.0	0.0	2.7
92	424007.62	5411921.35	368.71	0	E	1000	104.6	0.0	0.0	0.0	0.0	86.6	22.1	-3.0	0.0	0.0	4.8	0.0	0.0	-5.9
92	424007.62	5411921.35	368.71	0	E	2000	105.1	0.0	0.0	0.0	0.0	86.6	58.4	-3.0	0.0	0.0	4.8	0.0	0.0	-41.7
92	424007.62	5411921.35	368.71	0	E	4000	101.2	0.0	0.0	0.0	0.0	86.6	198.1	-3.0	0.0	0.0	4.8	0.0	0.0	-185.3
92	424007.62	5411921.35	368.71	0	E	8000	92.1	0.0	0.0	0.0	0.0	86.6	706.6	-3.0	0.0	0.0	4.8	0.0	0.0	-702.9

Point Source, ISO 9613, Name: "DC1", ID: ""																				
Nr.	X	Y	Z	Refl.	DEN	Freq.	Lw	l/a	Optime	K0	Dc	Adiv	Aatm	Agr	Afol	Ahous	Abar	Cmet	RL	Lr
	(m)	(m)	(m)			(Hz)	dB(A)	dB	dB	(dB)	(dB)	(dB)	(dB)	(dB)	(dB)	(dB)	(dB)	(dB)	(dB)	dB(A)
93	426780.20	5410251.09	397.00	0	DEN	32	63.1	0.0	0.0	0.0	0.0	81.5	0.1	-5.8	0.0	0.0	0.0	0.0	0.0	-12.8
93	426780.20	5410251.09	397.00	0	DEN	63	75.3	0.0	0.0	0.0	0.0	81.5	0.4	-5.8	0.0	0.0	0.0	0.0	0.0	-0.9
93	426780.20	5410251.09	397.00	0	DEN	125	87.3	0.0	0.0	0.0	0.0	81.5	1.4	1.3	0.0	0.0	0.0	0.0	0.0	3.0
93	426780.20	5410251.09	397.00	0	DEN	250	99.3	0.0	0.0	0.0	0.0	81.5	3.5	-1.1	0.0	0.0	0.0	0.0	0.0	15.4
93	426780.20	5410251.09	397.00	0	DEN	500	99.0	0.0	0.0	0.0	0.0	81.5	6.5	-2.5	0.0	0.0	0.0	0.0	0.0	13.5
93	426780.20	5410251.09	397.00	0	DEN	1000	98.6	0.0	0.0	0.0	0.0	81.5	12.3	-2.5	0.0	0.0	0.0	0.0	0.0	7.3
93	426780.20	5410251.09	397.00	0	DEN	2000	96.6	0.0	0.0	0.0	0.0	81.5	32.5	-2.5	0.0	0.0	0.0	0.0	0.0	-15.0
93	426780.20	5410251.09	397.00	0	DEN	4000	93.1	0.0	0.0	0.0	0.0	81.5	110.3	-2.5	0.0	0.0	0.0	0.0	0.0	-96.3
93	426780.20	5410251.09	397.00	0	DEN	8000	88.5	0.0	0.0	0.0	0.0	81.5	393.5	-2.5	0.0	0.0	0.0	0.0	0.0	-384.0

Point Source, ISO 9613, Name: "TD18", ID: ""																				
Nr.	X	Y	Z	Refl.	DEN	Freq.	Lw	l/a	Optime	K0	Dc	Adiv	Aatm	Agr	Afol	Ahous	Abar	Cmet	RL	Lr
	(m)	(m)	(m)			(Hz)	dB(A)	dB	dB	(dB)	(dB)	(dB)	(dB)	(dB)	(dB)	(dB)	(dB)	(dB)	(dB)	dB(A)
94	424156.52	5412149.65	369.80	0	D	32	60.4	0.0	0.0	0.0	0.0	86.8	0.2	-5.9	0.0	0.0	0.0	0.0	0.0	-20.7
94	424156.52	5412149.65	369.80	0	D	63	76.8	0.0	0.0	0.0	0.0	86.8	0.7	-5.9	0.0	0.0	0.0	0.0	0.0	-4.9
94	424156.52	5412149.65	369.80	0	D	125	90.3	0.0	0.0	0.0	0.0	86.8	2.5	1.2	0.0	0.0	0.0	0.0	0.0	-0.3
94	424156.52	5412149.65	369.80	0	D	250	98.5	0.0	0.0	0.0	0.0	86.8	6.4	-1.2	0.0	0.0	0.0	0.0	0.0	6.5
94	424156.52	5412149.65	369.80	0	D	500	102.8	0.0	0.0	0.0	0.0	86.8	11.9	-2.6	0.0	0.0	0.0	0.0	0.0	6.7
94	424156.52	5412149.65	369.80	0	D	1000	104.6	0.0	0.0	0.0	0.0	86.8	22.5	-2.6	0.0	0.0	0.0	0.0	0.0	-2.1
94	424156.52	5412149.65	369.80	0	D	2000	105.1	0.0	0.0	0.0	0.0	86.8	59.5	-2.6	0.0	0.0	0.0	0.0	0.0	-38.6
94	424156.52	5412149.65	369.80	0	D	4000	101.2	0.0	0.0	0.0	0.0	86.8	201.6	-2.6	0.0	0.0	0.0	0.0	0.0	-184.6
94	424156.52	5412149.65	369.80	0	D	8000	92.1	0.0	0.0	0.0	0.0	86.8	719.2	-2.6	0.0	0.0	0.0	0.0	0.0	-711.3
94	424156.52	5412149.65	369.80	0	N	32	60.4	0.0	0.0	0.0	0.0	86.8	0.2	-5.9	0.0	0.0	0.0	0.0	0.0	-20.7
94	424156.52	5412149.65	369.80	0	N	63	76.8	0.0	0.0	0.0	0.0	86.8	0.7	-5.9	0.0	0.0	0.0	0.0	0.0	-4.9
94	424156.52	5412149.65	369.80	0	N	125	90.3	0.0	0.0	0.0	0.0	86.8	2.5	1.2	0.0	0.0	0.0	0.0	0.0	-0.3
94	424156.52	5412149.65	369.80	0	N	250	98.5	0.0	0.0	0.0	0.0	86.8	6.4	-1.2	0.0	0.0	0.0	0.0	0.0	6.5
94	424156.52	5412149.65	369.80	0	N	500	102.8	0.0	0.0	0.0	0.0	86.8	11.9	-2.6	0.0	0.0	0.0	0.0	0.0	6.7
94	424156.52	5412149.65	369.80	0	N	1000	104.6	0.0	0.0	0.0	0.0	86.8	22.5	-2.6	0.0	0.0	0.0	0.0	0.0	-2.1
94	424156.52	5412149.65	369.80	0	N	2000	105.1	0.0	0.0	0.0	0.0	86.8	59.5	-2.6	0.0	0.0	0.0	0.0	0.0	-38.6
94	424156.52	5412149.65	369.80	0	N	4000	101.2	0.0	0.0	0.0	0.0	86.8	201.6	-2.6	0.0	0.0	0.0	0.0	0.0	-184.6
94	424156.52	5412149.65	369.80	0	N	8000	92.1	0.0	0.0	0.0	0.0	86.8	719.2	-2.6	0.0	0.0	0.0	0.0	0.0	-711.3
94	424156.52	5412149.65	369.80	0	E	32	60.4	0.0	0.0	0.0	0.0	86.8	0.2	-5.9	0.0	0.0	0.0	0.0	0.0	-20.7

Point Source, ISO 9613, Name: "TD18", ID: ""																				
Nr.	X	Y	Z	Refl.	DEN	Freq.	Lw	l/a	Optime	K0	Dc	Adiv	Aatm	Agr	Afol	Ahous	Abar	Cmet	RL	Lr
	(m)	(m)	(m)			(Hz)	dB(A)	dB	dB	(dB)	(dB)	(dB)	(dB)	(dB)	(dB)	(dB)	(dB)	(dB)	(dB)	dB(A)
94	424156.52	5412149.65	369.80	0	E	63	76.8	0.0	0.0	0.0	0.0	86.8	0.7	-5.9	0.0	0.0	0.0	0.0	0.0	-4.9
94	424156.52	5412149.65	369.80	0	E	125	90.3	0.0	0.0	0.0	0.0	86.8	2.5	1.2	0.0	0.0	0.0	0.0	0.0	-0.3
94	424156.52	5412149.65	369.80	0	E	250	98.5	0.0	0.0	0.0	0.0	86.8	6.4	-1.2	0.0	0.0	0.0	0.0	0.0	6.5
94	424156.52	5412149.65	369.80	0	E	500	102.8	0.0	0.0	0.0	0.0	86.8	11.9	-2.6	0.0	0.0	0.0	0.0	0.0	6.7
94	424156.52	5412149.65	369.80	0	E	1000	104.6	0.0	0.0	0.0	0.0	86.8	22.5	-2.6	0.0	0.0	0.0	0.0	0.0	-2.1
94	424156.52	5412149.65	369.80	0	E	2000	105.1	0.0	0.0	0.0	0.0	86.8	59.5	-2.6	0.0	0.0	0.0	0.0	0.0	-38.6
94	424156.52	5412149.65	369.80	0	E	4000	101.2	0.0	0.0	0.0	0.0	86.8	201.6	-2.6	0.0	0.0	0.0	0.0	0.0	-184.6
94	424156.52	5412149.65	369.80	0	E	8000	92.1	0.0	0.0	0.0	0.0	86.8	719.2	-2.6	0.0	0.0	0.0	0.0	0.0	-711.3

Point Source, ISO 9613, Name: "TD21", ID: ""																				
Nr.	X	Y	Z	Refl.	DEN	Freq.	Lw	l/a	Optime	K0	Dc	Adiv	Aatm	Agr	Afol	Ahous	Abar	Cmet	RL	Lr
	(m)	(m)	(m)			(Hz)	dB(A)	dB	dB	(dB)	(dB)	(dB)	(dB)	(dB)	(dB)	(dB)	(dB)	(dB)	(dB)	dB(A)
95	423666.19	5411856.09	367.38	0	DEN	32	60.4	0.0	0.0	0.0	0.0	86.8	0.2	-5.9	0.0	0.0	4.8	0.0	0.0	-25.5
95	423666.19	5411856.09	367.38	0	DEN	63	76.8	0.0	0.0	0.0	0.0	86.8	0.8	-5.9	0.0	0.0	4.8	0.0	0.0	-9.7
95	423666.19	5411856.09	367.38	0	DEN	125	90.3	0.0	0.0	0.0	0.0	86.8	2.5	0.7	0.0	0.0	4.0	0.0	0.0	-3.9
95	423666.19	5411856.09	367.38	0	DEN	250	98.5	0.0	0.0	0.0	0.0	86.8	6.5	-1.7	0.0	0.0	4.8	0.0	0.0	2.1
95	423666.19	5411856.09	367.38	0	DEN	500	102.8	0.0	0.0	0.0	0.0	86.8	11.9	-3.1	0.0	0.0	4.8	0.0	0.0	2.3
95	423666.19	5411856.09	367.38	0	DEN	1000	104.6	0.0	0.0	0.0	0.0	86.8	22.7	-3.1	0.0	0.0	4.8	0.0	0.0	-6.6
95	423666.19	5411856.09	367.38	0	DEN	2000	105.1	0.0	0.0	0.0	0.0	86.8	59.9	-3.1	0.0	0.0	4.8	0.0	0.0	-43.3
95	423666.19	5411856.09	367.38	0	DEN	4000	101.2	0.0	0.0	0.0	0.0	86.8	203.0	-3.1	0.0	0.0	4.8	0.0	0.0	-190.3
95	423666.19	5411856.09	367.38	0	DEN	8000	92.1	0.0	0.0	0.0	0.0	86.8	724.0	-3.1	0.0	0.0	4.8	0.0	0.0	-720.4

Point Source, ISO 9613, Name: "WP12", ID: ""																				
Nr.	X	Y	Z	Refl.	DEN	Freq.	Lw	l/a	Optime	K0	Dc	Adiv	Aatm	Agr	Afol	Ahous	Abar	Cmet	RL	Lr
	(m)	(m)	(m)			(Hz)	dB(A)	dB	dB	(dB)	(dB)	(dB)	(dB)	(dB)	(dB)	(dB)	(dB)	(dB)	(dB)	dB(A)
96	424065.23	5409081.91	350.62	0	DEN	32	60.3	0.0	0.0	0.0	0.0	83.0	0.1	-5.9	0.0	0.0	4.8	0.0	0.0	-21.8
96	424065.23	5409081.91	350.62	0	DEN	63	82.3	0.0	0.0	0.0	0.0	83.0	0.5	-5.9	0.0	0.0	4.8	0.0	0.0	-0.1
96	424065.23	5409081.91	350.62	0	DEN	125	92.2	0.0	0.0	0.0	0.0	83.0	1.6	8.1	0.0	0.0	0.0	0.0	0.0	-0.6
96	424065.23	5409081.91	350.62	0	DEN	250	88.5	0.0	0.0	0.0	0.0	83.0	4.2	7.1	0.0	0.0	0.0	0.0	0.0	-5.8
96	424065.23	5409081.91	350.62	0	DEN	500	97.4	0.0	0.0	0.0	0.0	83.0	7.7	4.0	0.0	0.0	0.8	0.0	0.0	1.9
96	424065.23	5409081.91	350.62	0	DEN	1000	102.0	0.0	0.0	0.0	0.0	83.0	14.6	0.3	0.0	0.0	4.5	0.0	0.0	-0.4
96	424065.23	5409081.91	350.62	0	DEN	2000	101.9	0.0	0.0	0.0	0.0	83.0	38.6	-0.2	0.0	0.0	4.8	0.0	0.0	-24.3
96	424065.23	5409081.91	350.62	0	DEN	4000	94.5	0.0	0.0	0.0	0.0	83.0	131.1	-0.2	0.0	0.0	4.8	0.0	0.0	-124.1
96	424065.23	5409081.91	350.62	0	DEN	8000	88.6	0.0	0.0	0.0	0.0	83.0	467.4	-0.2	0.0	0.0	4.8	0.0	0.0	-466.4

Point Source, ISO 9613, Name: "TD22", ID: ""																				
Nr.	X	Y	Z	Refl.	DEN	Freq.	Lw	l/a	Optime	K0	Dc	Adiv	Aatm	Agr	Afol	Ahous	Abar	Cmet	RL	Lr
	(m)	(m)	(m)			(Hz)	dB(A)	dB	dB	(dB)	(dB)	(dB)	(dB)	(dB)	(dB)	(dB)	(dB)	(dB)	(dB)	dB(A)
101	423193.84	5411886.08	367.78	0	DEN	32	60.4	0.0	0.0	0.0	0.0	87.3	0.2	-5.9	0.0	0.0	0.0	0.0	0.0	-21.2
101	423193.84	5411886.08	367.78	0	DEN	63	76.8	0.0	0.0	0.0	0.0	87.3	0.8	-5.9	0.0	0.0	0.0	0.0	0.0	-5.4
101	423193.84	5411886.08	367.78	0	DEN	125	90.3	0.0	0.0	0.0	0.0	87.3	2.7	0.8	0.0	0.0	0.0	0.0	0.0	-0.5
101	423193.84	5411886.08	367.78	0	DEN	250	98.5	0.0	0.0	0.0	0.0	87.3	6.8	-1.6	0.0	0.0	0.0	0.0	0.0	6.1
101	423193.84	5411886.08	367.78	0	DEN	500	102.8	0.0	0.0	0.0	0.0	87.3	12.6	-3.0	0.0	0.0	0.0	0.0	0.0	6.0
101	423193.84	5411886.08	367.78	0	DEN	1000	104.6	0.0	0.0	0.0	0.0	87.3	23.8	-3.0	0.0	0.0	0.0	0.0	0.0	-3.5
101	423193.84	5411886.08	367.78	0	DEN	2000	105.1	0.0	0.0	0.0	0.0	87.3	63.0	-3.0	0.0	0.0	0.0	0.0	0.0	-42.1
101	423193.84	5411886.08	367.78	0	DEN	4000	101.2	0.0	0.0	0.0	0.0	87.3	213.5	-3.0	0.0	0.0	0.0	0.0	0.0	-196.6
101	423193.84	5411886.08	367.78	0	DEN	8000	92.1	0.0	0.0	0.0	0.0	87.3	761.6	-3.0	0.0	0.0	0.0	0.0	0.0	-753.8

Point Source, ISO 9613, Name: "DC2", ID: ""																				
Nr.	X	Y	Z	Refl.	DEN	Freq.	Lw	l/a	Optime	K0	Dc	Adiv	Aatm	Agr	Afol	Ahous	Abar	Cmet	RL	Lr
	(m)	(m)	(m)			(Hz)	dB(A)	dB	dB	(dB)	(dB)	(dB)	(dB)	(dB)	(dB)	(dB)	(dB)	(dB)	(dB)	dB(A)
103	426611.94	5410474.13	375.01	0	DEN	32	63.1	0.0	0.0	0.0	0.0	82.2	0.1	-5.8	0.0	0.0	4.8	0.0	0.0	-18.2
103	426611.94	5410474.13	375.01	0	DEN	63	75.3	0.0	0.0	0.0	0.0	82.2	0.4	-5.8	0.0	0.0	4.8	0.0	0.0	-6.3
103	426611.94	5410474.13	375.01	0	DEN	125	87.3	0.0	0.0	0.0	0.0	82.2	1.5	1.2	0.0	0.0	3.6	0.0	0.0	-1.1
103	426611.94	5410474.13	375.01	0	DEN	250	99.3	0.0	0.0	0.0	0.0	82.2	3.8	-1.2	0.0	0.0	4.8	0.0	0.0	9.8
103	426611.94	5410474.13	375.01	0	DEN	500	99.0	0.0	0.0	0.0	0.0	82.2	7.0	-2.6	0.0	0.0	4.8	0.0	0.0	7.7
103	426611.94	5410474.13	375.01	0	DEN	1000	98.6	0.0	0.0	0.0	0.0	82.2	13.2	-2.6	0.0	0.0	4.8	0.0	0.0	1.1
103	426611.94	5410474.13	375.01	0	DEN	2000	96.6	0.0	0.0	0.0	0.0	82.2	35.0	-2.6	0.0	0.0	4.8	0.0	0.0	-22.7
103	426611.94	5410474.13	375.01	0	DEN	4000	93.1	0.0	0.0	0.0	0.0	82.2	118.6	-2.6	0.0	0.0	4.8	0.0	0.0	-109.8
103	426611.94	5410474.13	375.01	0	DEN	8000	88.5	0.0	0.0	0.0	0.0	82.2	423.2	-2.6	0.0	0.0	4.8	0.0	0.0	-419.0

Point Source, ISO 9613, Name: "TD23", ID: ""																				
Nr.	X	Y	Z	Refl.	DEN	Freq.	Lw	l/a	Optime	K0	Dc	Adiv	Aatm	Agr	Afol	Ahous	Abar	Cmet	RL	Lr
	(m)	(m)	(m)			(Hz)	dB(A)	dB	dB	(dB)	(dB)	(dB)	(dB)	(dB)	(dB)	(dB)	(dB)	(dB)	(dB)	dB(A)
110	422395.55	5411969.44	366.32	0	DEN	32	60.4	0.0	0.0	0.0	0.0	88.1	0.2	-5.9	0.0	0.0	0.0	0.0	0.0	-22.0
110	422395.55	5411969.44	366.32	0	DEN	63	76.8	0.0	0.0	0.0	0.0	88.1	0.9	-5.9	0.0	0.0	0.0	0.0	0.0	-6.2
110	422395.55	5411969.44	366.32	0	DEN	125	90.3	0.0	0.0	0.0	0.0	88.1	2.9	1.5	0.0	0.0	0.0	0.0	0.0	-2.1
110	422395.55	5411969.44	366.32	0	DEN	250	98.5	0.0	0.0	0.0	0.0	88.1	7.4	-1.0	0.0	0.0	0.0	0.0	0.0	4.0
110	422395.55	5411969.44	366.32	0	DEN	500	102.8	0.0	0.0	0.0	0.0	88.1	13.7	-2.4	0.0	0.0	0.0	0.0	0.0	3.4
110	422395.55	5411969.44	366.32	0	DEN	1000	104.6	0.0	0.0	0.0	0.0	88.1	26.0	-2.4	0.0	0.0	0.0	0.0	0.0	-7.1
110	422395.55	5411969.44	366.32	0	DEN	2000	105.1	0.0	0.0	0.0	0.0	88.1	68.8	-2.4	0.0	0.0	0.0	0.0	0.0	-49.4
110	422395.55	5411969.44	366.32	0	DEN	4000	101.2	0.0	0.0	0.0	0.0	88.1	233.4	-2.4	0.0	0.0	0.0	0.0	0.0	-217.9
110	422395.55	5411969.44	366.32	0	DEN	8000	92.1	0.0	0.0	0.0	0.0	88.1	832.4	-2.4	0.0	0.0	0.0	0.0	0.0	-826.0

Point Source, ISO 9613, Name: "TD24", ID: ""																				
Nr.	X	Y	Z	Refl.	DEN	Freq.	Lw	l/a	Optime	K0	Dc	Adiv	Aatm	Agr	Afol	Ahous	Abar	Cmet	RL	Lr
	(m)	(m)	(m)			(Hz)	dB(A)	dB	dB	(dB)	(dB)	(dB)	(dB)	(dB)	(dB)	(dB)	(dB)	(dB)	(dB)	dB(A)
113	422167.41	5411848.62	365.72	0	DEN	32	60.4	0.0	0.0	0.0	0.0	88.2	0.2	-5.9	0.0	0.0	0.0	0.0	0.0	-22.1
113	422167.41	5411848.62	365.72	0	DEN	63	76.8	0.0	0.0	0.0	0.0	88.2	0.9	-5.9	0.0	0.0	0.0	0.0	0.0	-6.3
113	422167.41	5411848.62	365.72	0	DEN	125	90.3	0.0	0.0	0.0	0.0	88.2	3.0	1.7	0.0	0.0	0.0	0.0	0.0	-2.5
113	422167.41	5411848.62	365.72	0	DEN	250	98.5	0.0	0.0	0.0	0.0	88.2	7.5	-0.8	0.0	0.0	0.0	0.0	0.0	3.6
113	422167.41	5411848.62	365.72	0	DEN	500	102.8	0.0	0.0	0.0	0.0	88.2	13.9	-2.2	0.0	0.0	0.0	0.0	0.0	2.9
113	422167.41	5411848.62	365.72	0	DEN	1000	104.6	0.0	0.0	0.0	0.0	88.2	26.3	-2.2	0.0	0.0	0.0	0.0	0.0	-7.7
113	422167.41	5411848.62	365.72	0	DEN	2000	105.1	0.0	0.0	0.0	0.0	88.2	69.6	-2.2	0.0	0.0	0.0	0.0	0.0	-50.5
113	422167.41	5411848.62	365.72	0	DEN	4000	101.2	0.0	0.0	0.0	0.0	88.2	236.0	-2.2	0.0	0.0	0.0	0.0	0.0	-220.8
113	422167.41	5411848.62	365.72	0	DEN	8000	92.1	0.0	0.0	0.0	0.0	88.2	841.9	-2.2	0.0	0.0	0.0	0.0	0.0	-835.8

Point Source, ISO 9613, Name: "TD25", ID: ""																				
Nr.	X	Y	Z	Refl.	DEN	Freq.	Lw	l/a	Optime	K0	Dc	Adiv	Aatm	Agr	Afol	Ahous	Abar	Cmet	RL	Lr
	(m)	(m)	(m)			(Hz)	dB(A)	dB	dB	(dB)	(dB)	(dB)	(dB)	(dB)	(dB)	(dB)	(dB)	(dB)	(dB)	dB(A)
115	421999.28	5411775.99	365.91	0	DEN	32	60.4	0.0	0.0	0.0	0.0	88.2	0.2	-5.9	0.0	0.0	0.0	0.0	0.0	-22.2
115	421999.28	5411775.99	365.91	0	DEN	63	76.8	0.0	0.0	0.0	0.0	88.2	0.9	-5.9	0.0	0.0	0.0	0.0	0.0	-6.4
115	421999.28	5411775.99	365.91	0	DEN	125	90.3	0.0	0.0	0.0	0.0	88.2	3.0	1.8	0.0	0.0	0.0	0.0	0.0	-2.7
115	421999.28	5411775.99	365.91	0	DEN	250	98.5	0.0	0.0	0.0	0.0	88.2	7.6	-0.7	0.0	0.0	0.0	0.0	0.0	3.4
115	421999.28	5411775.99	365.91	0	DEN	500	102.8	0.0	0.0	0.0	0.0	88.2	14.0	-2.2	0.0	0.0	0.0	0.0	0.0	2.7
115	421999.28	5411775.99	365.91	0	DEN	1000	104.6	0.0	0.0	0.0	0.0	88.2	26.6	-2.2	0.0	0.0	0.0	0.0	0.0	-8.1
115	421999.28	5411775.99	365.91	0	DEN	2000	105.1	0.0	0.0	0.0	0.0	88.2	70.3	-2.2	0.0	0.0	0.0	0.0	0.0	-51.3
115	421999.28	5411775.99	365.91	0	DEN	4000	101.2	0.0	0.0	0.0	0.0	88.2	238.5	-2.2	0.0	0.0	0.0	0.0	0.0	-223.4
115	421999.28	5411775.99	365.91	0	DEN	8000	92.1	0.0	0.0	0.0	0.0	88.2	850.8	-2.2	0.0	0.0	0.0	0.0	0.0	-844.7

Point Source, ISO 9613, Name: "TD26", ID: ""																				
Nr.	X	Y	Z	Refl.	DEN	Freq.	Lw	l/a	Optime	K0	Dc	Adiv	Aatm	Agr	Afol	Ahous	Abar	Cmet	RL	Lr
	(m)	(m)	(m)			(Hz)	dB(A)	dB	dB	(dB)	(dB)	(dB)	(dB)	(dB)	(dB)	(dB)	(dB)	(dB)	(dB)	dB(A)
116	421885.96	5411753.93	366.39	0	DEN	32	60.4	0.0	0.0	0.0	0.0	88.3	0.2	-5.9	0.0	0.0	0.0	0.0	0.0	-22.3
116	421885.96	5411753.93	366.39	0	DEN	63	76.8	0.0	0.0	0.0	0.0	88.3	0.9	-5.9	0.0	0.0	0.0	0.0	0.0	-6.5
116	421885.96	5411753.93	366.39	0	DEN	125	90.3	0.0	0.0	0.0	0.0	88.3	3.0	1.6	0.0	0.0	0.0	0.0	0.0	-2.7
116	421885.96	5411753.93	366.39	0	DEN	250	98.5	0.0	0.0	0.0	0.0	88.3	7.7	-0.8	0.0	0.0	0.0	0.0	0.0	3.3
116	421885.96	5411753.93	366.39	0	DEN	500	102.8	0.0	0.0	0.0	0.0	88.3	14.2	-2.2	0.0	0.0	0.0	0.0	0.0	2.5
116	421885.96	5411753.93	366.39	0	DEN	1000	104.6	0.0	0.0	0.0	0.0	88.3	26.9	-2.2	0.0	0.0	0.0	0.0	0.0	-8.4
116	421885.96	5411753.93	366.39	0	DEN	2000	105.1	0.0	0.0	0.0	0.0	88.3	71.0	-2.2	0.0	0.0	0.0	0.0	0.0	-52.1
116	421885.96	5411753.93	366.39	0	DEN	4000	101.2	0.0	0.0	0.0	0.0	88.3	240.8	-2.2	0.0	0.0	0.0	0.0	0.0	-225.8
116	421885.96	5411753.93	366.39	0	DEN	8000	92.1	0.0	0.0	0.0	0.0	88.3	859.0	-2.2	0.0	0.0	0.0	0.0	0.0	-853.1

Point Source, ISO 9613, Name: "TD27", ID: ""																				
Nr.	X	Y	Z	Refl.	DEN	Freq.	Lw	l/a	Optime	K0	Dc	Adiv	Aatm	Agr	Afol	Ahous	Abar	Cmet	RL	Lr
	(m)	(m)	(m)			(Hz)	dB(A)	dB	dB	(dB)	(dB)	(dB)	(dB)	(dB)	(dB)	(dB)	(dB)	(dB)	(dB)	dB(A)
117	421804.08	5411725.58	366.58	0	DEN	32	60.4	0.0	0.0	0.0	0.0	88.4	0.2	-5.9	0.0	0.0	0.0	0.0	0.0	-22.3
117	421804.08	5411725.58	366.58	0	DEN	63	76.8	0.0	0.0	0.0	0.0	88.4	0.9	-5.9	0.0	0.0	0.0	0.0	0.0	-6.6
117	421804.08	5411725.58	366.58	0	DEN	125	90.3	0.0	0.0	0.0	0.0	88.4	3.0	1.7	0.0	0.0	0.0	0.0	0.0	-2.8
117	421804.08	5411725.58	366.58	0	DEN	250	98.5	0.0	0.0	0.0	0.0	88.4	7.7	-0.8	0.0	0.0	0.0	0.0	0.0	3.2
117	421804.08	5411725.58	366.58	0	DEN	500	102.8	0.0	0.0	0.0	0.0	88.4	14.3	-2.2	0.0	0.0	0.0	0.0	0.0	2.4
117	421804.08	5411725.58	366.58	0	DEN	1000	104.6	0.0	0.0	0.0	0.0	88.4	27.0	-2.2	0.0	0.0	0.0	0.0	0.0	-8.6
117	421804.08	5411725.58	366.58	0	DEN	2000	105.1	0.0	0.0	0.0	0.0	88.4	71.4	-2.2	0.0	0.0	0.0	0.0	0.0	-52.5
117	421804.08	5411725.58	366.58	0	DEN	4000	101.2	0.0	0.0	0.0	0.0	88.4	242.3	-2.2	0.0	0.0	0.0	0.0	0.0	-227.3
117	421804.08	5411725.58	366.58	0	DEN	8000	92.1	0.0	0.0	0.0	0.0	88.4	864.2	-2.2	0.0	0.0	0.0	0.0	0.0	-858.2

Point Source, ISO 9613, Name: "WS", ID: ""																					
Nr.	X	Y	Z	Refl.	DEN	Freq.	Lw	l/a	Optime	K0	Dc	Adiv	Aatm	Agr	Afol	Ahous	Abar	Cmet	RL	Lr
	(m)	(m)	(m)			(Hz)	dB(A)	dB	dB	(dB)	(dB)	(dB)	(dB)	(dB)	(dB)	(dB)	(dB)	(dB)	(dB)	dB(A)
118	426584.81	5410957.29	373.00	0	DEN	500	105.0	0.0	0.0	0.0	0.0	83.3	7.9	-2.9	0.0	0.0	4.8	0.0	0.0	11.9

Point Source, ISO 9613, Name: "WP17", ID: ""																					
Nr.	X	Y	Z	Refl.	DEN	Freq.	Lw	l/a	Optime	K0	Dc	Adiv	Aatm	Agr	Afol	Ahous	Abar	Cmet	RL	Lr
	(m)	(m)	(m)			(Hz)	dB(A)	dB	dB	(dB)	(dB)	(dB)	(dB)	(dB)	(dB)	(dB)	(dB)	(dB)	(dB)	dB(A)
126	424105.05	5410979.95	361.50	0	DEN	32	60.3	0.0	0.0	0.0	0.0	85.4	0.2	-5.9	0.0	0.0	0.0	0.0	0.0	-19.4
126	424105.05	5410979.95	361.50	0	DEN	63	82.3	0.0	0.0	0.0	0.0	85.4	0.6	-5.9	0.0	0.0	0.0	0.0	0.0	2.2
126	424105.05	5410979.95	361.50	0	DEN	125	92.2	0.0	0.0	0.0	0.0	85.4	2.2	1.2	0.0	0.0	0.0	0.0	0.0	3.5
126	424105.05	5410979.95	361.50	0	DEN	250	88.5	0.0	0.0	0.0	0.0	85.4	5.5	-1.2	0.0	0.0	0.0	0.0	0.0	-1.1
126	424105.05	5410979.95	361.50	0	DEN	500	97.4	0.0	0.0	0.0	0.0	85.4	10.1	-2.7	0.0	0.0	0.0	0.0	0.0	4.6
126	424105.05	5410979.95	361.50	0	DEN	1000	102.0	0.0	0.0	0.0	0.0	85.4	19.2	-2.7	0.0	0.0	0.0	0.0	0.0	0.2
126	424105.05	5410979.95	361.50	0	DEN	2000	101.9	0.0	0.0	0.0	0.0	85.4	50.6	-2.8	0.0	0.0	0.0	0.0	0.0	-31.3
126	424105.05	5410979.95	361.50	0	DEN	4000	94.5	0.0	0.0	0.0	0.0	85.4	171.6	-2.8	0.0	0.0	0.0	0.0	0.0	-159.7
126	424105.05	5410979.95	361.50	0	DEN	8000	88.6	0.0	0.0	0.0	0.0	85.4	612.0	-2.8	0.0	0.0	0.0	0.0	0.0	-606.0

Point Source, ISO 9613, Name: "WP15", ID: ""																					
Nr.	X	Y	Z	Refl.	DEN	Freq.	Lw	l/a	Optime	K0	Dc	Adiv	Aatm	Agr	Afol	Ahous	Abar	Cmet	RL	Lr
	(m)	(m)	(m)			(Hz)	dB(A)	dB	dB	(dB)	(dB)	(dB)	(dB)	(dB)	(dB)	(dB)	(dB)	(dB)	(dB)	dB(A)
131	423105.04	5410312.80	360.51	0	DEN	32	60.3	0.0	0.0	0.0	0.0	85.8	0.2	-5.9	0.0	0.0	0.0	0.0	0.0	-19.8
131	423105.04	5410312.80	360.51	0	DEN	63	82.3	0.0	0.0	0.0	0.0	85.8	0.7	-5.9	0.0	0.0	0.0	0.0	0.0	1.7
131	423105.04	5410312.80	360.51	0	DEN	125	92.2	0.0	0.0	0.0	0.0	85.8	2.3	2.0	0.0	0.0	0.0	0.0	0.0	2.2
131	423105.04	5410312.80	360.51	0	DEN	250	88.5	0.0	0.0	0.0	0.0	85.8	5.7	-0.4	0.0	0.0	0.0	0.0	0.0	-2.6
131	423105.04	5410312.80	360.51	0	DEN	500	97.4	0.0	0.0	0.0	0.0	85.8	10.6	-1.9	0.0	0.0	0.0	0.0	0.0	2.9
131	423105.04	5410312.80	360.51	0	DEN	1000	102.0	0.0	0.0	0.0	0.0	85.8	20.1	-2.1	0.0	0.0	0.0	0.0	0.0	-1.8
131	423105.04	5410312.80	360.51	0	DEN	2000	101.9	0.0	0.0	0.0	0.0	85.8	53.1	-2.1	0.0	0.0	0.0	0.0	0.0	-34.9
131	423105.04	5410312.80	360.51	0	DEN	4000	94.5	0.0	0.0	0.0	0.0	85.8	180.0	-2.1	0.0	0.0	0.0	0.0	0.0	-169.2
131	423105.04	5410312.80	360.51	0	DEN	8000	88.6	0.0	0.0	0.0	0.0	85.8	642.0	-2.1	0.0	0.0	0.0	0.0	0.0	-637.2

Point Source, ISO 9613, Name: "WP14", ID: ""																					
Nr.	X	Y	Z	Refl.	DEN	Freq.	Lw	l/a	Optime	K0	Dc	Adiv	Aatm	Agr	Afol	Ahous	Abar	Cmet	RL	Lr
	(m)	(m)	(m)			(Hz)	dB(A)	dB	dB	(dB)	(dB)	(dB)	(dB)	(dB)	(dB)	(dB)	(dB)	(dB)	(dB)	dB(A)
132	423065.90	5410311.46	359.89	0	DEN	32	60.3	0.0	0.0	0.0	0.0	85.8	0.2	-5.9	0.0	0.0	4.8	0.0	0.0	-24.6
132	423065.90	5410311.46	359.89	0	DEN	63	82.3	0.0	0.0	0.0	0.0	85.8	0.7	-5.9	0.0	0.0	4.8	0.0	0.0	-3.1
132	423065.90	5410311.46	359.89	0	DEN	125	92.2	0.0	0.0	0.0	0.0	85.8	2.3	1.7	0.0	0.0	3.1	0.0	0.0	-0.7
132	423065.90	5410311.46	359.89	0	DEN	250	88.5	0.0	0.0	0.0	0.0	85.8	5.8	-0.8	0.0	0.0	4.8	0.0	0.0	-7.1
132	423065.90	5410311.46	359.89	0	DEN	500	97.4	0.0	0.0	0.0	0.0	85.8	10.6	-2.2	0.0	0.0	4.8	0.0	0.0	-1.7
132	423065.90	5410311.46	359.89	0	DEN	1000	102.0	0.0	0.0	0.0	0.0	85.8	20.2	-2.2	0.0	0.0	4.8	0.0	0.0	-6.7
132	423065.90	5410311.46	359.89	0	DEN	2000	101.9	0.0	0.0	0.0	0.0	85.8	53.4	-2.2	0.0	0.0	4.8	0.0	0.0	-39.9
132	423065.90	5410311.46	359.89	0	DEN	4000	94.5	0.0	0.0	0.0	0.0	85.8	181.0	-2.2	0.0	0.0	4.8	0.0	0.0	-174.9
132	423065.90	5410311.46	359.89	0	DEN	8000	88.6	0.0	0.0	0.0	0.0	85.8	645.6	-2.2	0.0	0.0	4.8	0.0	0.0	-645.4

Point Source, ISO 9613, Name: "WP18", ID: ""																					
Nr.	X	Y	Z	Refl.	DEN	Freq.	Lw	l/a	Optime	K0	Dc	Adiv	Aatm	Agr	Afol	Ahous	Abar	Cmet	RL	Lr
	(m)	(m)	(m)			(Hz)	dB(A)	dB	dB	(dB)	(dB)	(dB)	(dB)	(dB)	(dB)	(dB)	(dB)	(dB)	(dB)	dB(A)
144	421921.50	5409452.64	346.50	0	DEN	32	60.3	0.0	0.0	0.0	0.0	86.7	0.2	-5.9	0.0	0.0	4.8	0.0	0.0	-25.4
144	421921.50	5409452.64	346.50	0	DEN	63	82.3	0.0	0.0	0.0	0.0	86.7	0.7	-5.9	0.0	0.0	4.8	0.0	0.0	-4.0
144	421921.50	5409452.64	346.50	0	DEN	125	92.2	0.0	0.0	0.0	0.0	86.7	2.5	2.4	0.0	0.0	2.4	0.0	0.0	-1.7
144	421921.50	5409452.64	346.50	0	DEN	250	88.5	0.0	0.0	0.0	0.0	86.7	6.3	0.0	0.0	0.0	4.8	0.0	0.0	-9.3
144	421921.50	5409452.64	346.50	0	DEN	500	97.4	0.0	0.0	0.0	0.0	86.7	11.7	-1.4	0.0	0.0	4.8	0.0	0.0	-4.3
144	421921.50	5409452.64	346.50	0	DEN	1000	102.0	0.0	0.0	0.0	0.0	86.7	22.2	-1.5	0.0	0.0	4.8	0.0	0.0	-10.1
144	421921.50	5409452.64	346.50	0	DEN	2000	101.9	0.0	0.0	0.0	0.0	86.7	58.6	-1.5	0.0	0.0	4.8	0.0	0.0	-46.6
144	421921.50	5409452.64	346.50	0	DEN	4000	94.5	0.0	0.0	0.0	0.0	86.7	198.8	-1.5	0.0	0.0	4.8	0.0	0.0	-194.2
144	421921.50	5409452.64	346.50	0	DEN	8000	88.6	0.0	0.0	0.0	0.0	86.7	709.2	-1.5	0.0	0.0	4.8	0.0	0.0	-710.5

Line Source, ISO 9613, Name: "TRL_OP-PAG", ID: ""																					
Nr.	X	Y	Z	Refl.	DEN	Freq.	Lw	l/a	Optime	K0	Dc	Adiv	Aatm	Agr	Afol	Ahous	Abar	Cmet	RL	Lr
	(m)	(m)	(m)			(Hz)	dB(A)	dB	dB	(dB)	(dB)	(dB)	(dB)	(dB)	(dB)	(dB)	(dB)	(dB)	(dB)	dB(A)
46	425801.66	5409408.25	323.64	0	DEN	32	44.7	26.3	0.0	0.0	0.0	80.4	0.1	-5.7	0.0	0.0	4.8	0.0	0.0	-8.6
46	425801.66	5409408.25	323.64	0	DEN	63	67.1	26.3	0.0	0.0	0.0	80.4	0.4	-5.7	0.0	0.0	4.8	0.0	0.0	13.5
46	425801.66	5409408.25	323.64	0	DEN	125	80.4	26.3	0.0	0.0	0.0	80.4	1.2	2.2	0.0	0.0	2.6	0.0	0.0	20.2
46	425801.66	5409408.25	323.64	0	DEN	250	74.6	26.3	0.0	0.0	0.0	80.4	3.1	-0.2	0.0	0.0	4.8	0.0	0.0	12.8
46	425801.66	5409408.25	323.64	0	DEN	500	74.5	26.3	0.0	0.0	0.0	80.4	5.7	-1.6	0.0	0.0	4.8	0.0	0.0	11.4
46	425801.66	5409408.25	323.64	0	DEN	1000	71.6	26.3	0.0	0.0	0.0	80.4	10.8	-1.6	0.0	0.0	4.9	0.0	0.0	3.4
46	425801.66	5409408.25	323.64	0	DEN	2000	67.9	26.3	0.0	0.0	0.0	80.4	28.6	-1.6	0.0	0.0	4.9	0.0	0.0	-18.2

Line Source, ISO 9613, Name: "TRL_OP-PAG", ID: ""																					
Nr.	X	Y	Z	Refl.	DEN	Freq.	Lw	l/a	Optime	K0	Dc	Adiv	Aatm	Agr	Afol	Ahous	Abar	Cmet	RL	Lr
	(m)	(m)	(m)			(Hz)	dB(A)	dB	dB	(dB)	(dB)	(dB)	(dB)	(dB)	(dB)	(dB)	(dB)	(dB)	(dB)	dB(A)
46	425801.66	5409408.25	323.64	0	DEN	4000	63.5	26.3	0.0	0.0	0.0	80.4	96.9	-1.6	0.0	0.0	5.1	0.0	0.0	-91.1
46	425801.66	5409408.25	323.64	0	DEN	8000	57.7	26.3	0.0	0.0	0.0	80.4	345.8	-1.6	0.0	0.0	5.4	0.0	0.0	-346.1
50	427768.33	5409935.46	378.32	0	DEN	32	44.7	26.0	0.0	0.0	0.0	80.5	0.1	-5.7	0.0	0.0	4.8	0.0	0.0	-8.9
50	427768.33	5409935.46	378.32	0	DEN	63	67.1	26.0	0.0	0.0	0.0	80.5	0.4	-5.7	0.0	0.0	4.8	0.0	0.0	13.2
50	427768.33	5409935.46	378.32	0	DEN	125	80.4	26.0	0.0	0.0	0.0	80.5	1.2	1.5	0.0	0.0	3.3	0.0	0.0	19.9
50	427768.33	5409935.46	378.32	0	DEN	250	74.6	26.0	0.0	0.0	0.0	80.5	3.1	-0.9	0.0	0.0	4.8	0.0	0.0	13.1
50	427768.33	5409935.46	378.32	0	DEN	500	74.5	26.0	0.0	0.0	0.0	80.5	5.8	-2.3	0.0	0.0	4.8	0.0	0.0	11.8
50	427768.33	5409935.46	378.32	0	DEN	1000	71.6	26.0	0.0	0.0	0.0	80.5	11.0	-2.3	0.0	0.0	4.8	0.0	0.0	3.7
50	427768.33	5409935.46	378.32	0	DEN	2000	67.9	26.0	0.0	0.0	0.0	80.5	29.0	-2.3	0.0	0.0	4.8	0.0	0.0	-18.0
50	427768.33	5409935.46	378.32	0	DEN	4000	63.5	26.0	0.0	0.0	0.0	80.5	98.3	-2.3	0.0	0.0	4.8	0.0	0.0	-91.8
50	427768.33	5409935.46	378.32	0	DEN	8000	57.7	26.0	0.0	0.0	0.0	80.5	350.7	-2.3	0.0	0.0	4.8	0.0	0.0	-349.9
59	427130.64	5409764.07	392.31	0	DEN	32	44.7	24.3	0.0	0.0	0.0	80.0	0.1	-5.7	0.0	0.0	0.0	0.0	0.0	-5.4
59	427130.64	5409764.07	392.31	0	DEN	63	67.1	24.3	0.0	0.0	0.0	80.0	0.3	-5.7	0.0	0.0	0.0	0.0	0.0	16.8
59	427130.64	5409764.07	392.31	0	DEN	125	80.4	24.3	0.0	0.0	0.0	80.0	1.2	1.8	0.0	0.0	0.0	0.0	0.0	21.7
59	427130.64	5409764.07	392.31	0	DEN	250	74.6	24.3	0.0	0.0	0.0	80.0	3.0	-0.6	0.0	0.0	0.0	0.0	0.0	16.6
59	427130.64	5409764.07	392.31	0	DEN	500	74.5	24.3	0.0	0.0	0.0	80.0	5.5	-2.0	0.0	0.0	0.0	0.0	0.0	15.4
59	427130.64	5409764.07	392.31	0	DEN	1000	71.6	24.3	0.0	0.0	0.0	80.0	10.4	-2.0	0.0	0.0	0.0	0.0	0.0	7.6
59	427130.64	5409764.07	392.31	0	DEN	2000	67.9	24.3	0.0	0.0	0.0	80.0	27.4	-2.0	0.0	0.0	0.0	0.0	0.0	-13.1
59	427130.64	5409764.07	392.31	0	DEN	4000	63.5	24.3	0.0	0.0	0.0	80.0	92.7	-2.0	0.0	0.0	0.0	0.0	0.0	-82.9
59	427130.64	5409764.07	392.31	0	DEN	8000	57.7	24.3	0.0	0.0	0.0	80.0	330.8	-2.0	0.0	0.0	0.0	0.0	0.0	-326.8
69	426731.13	5409642.73	379.00	0	DEN	32	44.7	22.6	0.0	0.0	0.0	79.9	0.1	-5.7	0.0	0.0	4.8	0.0	0.0	-11.8
69	426731.13	5409642.73	379.00	0	DEN	63	67.1	22.6	0.0	0.0	0.0	79.9	0.3	-5.7	0.0	0.0	4.8	0.0	0.0	10.4
69	426731.13	5409642.73	379.00	0	DEN	125	80.4	22.6	0.0	0.0	0.0	79.9	1.1	1.8	0.0	0.0	3.0	0.0	0.0	17.1
69	426731.13	5409642.73	379.00	0	DEN	250	74.6	22.6	0.0	0.0	0.0	79.9	2.9	-0.7	0.0	0.0	4.8	0.0	0.0	10.2
69	426731.13	5409642.73	379.00	0	DEN	500	74.5	22.6	0.0	0.0	0.0	79.9	5.4	-2.1	0.0	0.0	4.8	0.0	0.0	9.1
69	426731.13	5409642.73	379.00	0	DEN	1000	71.6	22.6	0.0	0.0	0.0	79.9	10.2	-2.1	0.0	0.0	4.9	0.0	0.0	1.3
69	426731.13	5409642.73	379.00	0	DEN	2000	67.9	22.6	0.0	0.0	0.0	79.9	26.9	-2.1	0.0	0.0	4.9	0.0	0.0	-19.2
69	426731.13	5409642.73	379.00	0	DEN	4000	63.5	22.6	0.0	0.0	0.0	79.9	91.3	-2.1	0.0	0.0	5.1	0.0	0.0	-88.1
69	426731.13	5409642.73	379.00	0	DEN	8000	57.7	22.6	0.0	0.0	0.0	79.9	325.5	-2.1	0.0	0.0	5.4	0.0	0.0	-328.5
71	426423.02	5409600.02	372.09	0	DEN	32	44.7	22.6	0.0	0.0	0.0	80.1	0.1	-5.7	0.0	0.0	4.8	0.0	0.0	-11.9
71	426423.02	5409600.02	372.09	0	DEN	63	67.1	22.6	0.0	0.0	0.0	80.1	0.3	-5.7	0.0	0.0	4.8	0.0	0.0	10.2
71	426423.02	5409600.02	372.09	0	DEN	125	80.4	22.6	0.0	0.0	0.0	80.1	1.2	2.0	0.0	0.0	2.7	0.0	0.0	17.0
71	426423.02	5409600.02	372.09	0	DEN	250	74.6	22.6	0.0	0.0	0.0	80.1	3.0	-0.4	0.0	0.0	4.8	0.0	0.0	9.8
71	426423.02	5409600.02	372.09	0	DEN	500	74.5	22.6	0.0	0.0	0.0	80.1	5.5	-1.8	0.0	0.0	4.8	0.0	0.0	8.6
71	426423.02	5409600.02	372.09	0	DEN	1000	71.6	22.6	0.0	0.0	0.0	80.1	10.4	-1.8	0.0	0.0	4.8	0.0	0.0	0.8
71	426423.02	5409600.02	372.09	0	DEN	2000	67.9	22.6	0.0	0.0	0.0	80.1	27.4	-1.8	0.0	0.0	4.8	0.0	0.0	-20.0
71	426423.02	5409600.02	372.09	0	DEN	4000	63.5	22.6	0.0	0.0	0.0	80.1	93.1	-1.8	0.0	0.0	4.8	0.0	0.0	-90.0
71	426423.02	5409600.02	372.09	0	DEN	8000	57.7	22.6	0.0	0.0	0.0	80.1	332.0	-1.8	0.0	0.0	4.8	0.0	0.0	-334.7
72	426257.88	5409501.70	362.21	0	DEN	32	44.7	22.5	0.0	0.0	0.0	80.0	0.1	-5.7	0.0	0.0	4.8	0.0	0.0	-12.0
72	426257.88	5409501.70	362.21	0	DEN	63	67.1	22.5	0.0	0.0	0.0	80.0	0.3	-5.7	0.0	0.0	4.8	0.0	0.0	10.2
72	426257.88	5409501.70	362.21	0	DEN	125	80.4	22.5	0.0	0.0	0.0	80.0	1.2	2.3	0.0	0.0	2.5	0.0	0.0	16.9
72	426257.88	5409501.70	362.21	0	DEN	250	74.6	22.5	0.0	0.0	0.0	80.0	2.9	-0.1	0.0	0.0	4.8	0.0	0.0	9.5
72	426257.88	5409501.70	362.21	0	DEN	500	74.5	22.5	0.0	0.0	0.0	80.0	5.4	-1.5	0.0	0.0	4.8	0.0	0.0	8.3
72	426257.88	5409501.70	362.21	0	DEN	1000	71.6	22.5	0.0	0.0	0.0	80.0	10.3	-1.5	0.0	0.0	4.8	0.0	0.0	0.5
72	426257.88	5409501.70	362.21	0	DEN	2000	67.9	22.5	0.0	0.0	0.0	80.0	27.2	-1.5	0.0	0.0	4.8	0.0	0.0	-20.1
72	426257.88	5409501.70	362.21	0	DEN	4000	63.5	22.5	0.0	0.0	0.0	80.0	92.2	-1.5	0.0	0.0	4.8	0.0	0.0	-89.5
72	426257.88	5409501.70	362.21	0	DEN	8000	57.7	22.5	0.0	0.0	0.0	80.0	329.0	-1.5	0.0	0.0	4.8	0.0	0.0	-332.1
79	425499.96	5409458.22	299.79	0	DEN	32	44.7	22.8	0.0	0.0	0.0	81.0	0.1	-5.8	0.0	0.0	5.2	0.0	0.0	-13.0
79	425499.96	5409458.22	299.79	0	DEN	63	67.1	22.8	0.0	0.0	0.0	81.0	0.4	-5.8	0.0	0.0	5.5	0.0	0.0	8.7
79	425499.96	5409458.22	299.79	0	DEN	125	80.4	22.8	0.0	0.0	0.0	81.0	1.3	2.2	0.0	0.0	4.0	0.0	0.0	14.7
79	425499.96	5409458.22	299.79	0	DEN	250	74.6	22.8	0.0	0.0	0.0	81.0	3.3	-0.3	0.0	0.0	7.2	0.0	0.0	6.1
79	425499.96	5409458.22	299.79	0	DEN	500	74.5	22.8	0.0	0.0	0.0	81.0	6.1	-1.7	0.0	0.0	8.8	0.0	0.0	3.1
79	425499.96	5409458.22	299.79	0	DEN	1000	71.6	22.8	0.0	0.0	0.0	81.0	11.6	-1.7	0.0	0.0	10.8	0.0	0.0	-7.4
79	425499.96	5409458.22	299.79	0	DEN	2000	67.9	22.8	0.0	0.0	0.0	81.0	30.7	-1.7	0.0	0.0	13.2	0.0	0.0	-32.6
79	425499.96	5409458.22	299.79	0	DEN	4000	63.5	22.8	0.0	0.0	0.0	81.0	104.1	-1.7	0.0	0.0	15.9	0.0	0.0	-113.0
79	425499.96	5409458.22	299.79	0	DEN	8000	57.7	22.8	0.0	0.0	0.0	81.0	371.2	-1.7	0.0	0.0	18.8	0.0	0.0	-388.8
84	426080.39	5409381.88	341.58	0	DEN	32	44.7	21.4	0.0	0.0	0.0	79.9	0.1	-5.7	0.0	0.0	4.8	0.0	0.0	-12.9
84	426080.39	5409381.88	341.58	0	DEN	63	67.1	21.4	0.0	0.0	0.0	79.9	0.3	-5.7	0.0	0.0	4.8	0.0	0.0	9.2
84	426080.39	5409381.88	341.58	0	DEN	125	80.4	21.4	0.0	0.0	0.0	79.9	1.1	2.1	0.0	0.0	2.6	0.0	0.0	16.0
84	426080.39	5409381.88	341.58	0	DEN	250	74.6	21.4	0.0	0.0	0.0	79.9	2.9	-0.3	0.0	0.0	4.8	0.0	0.0	8.7
84	426080.39	5409381.88	341.58	0	DEN	500	74.5	21.4	0.0	0.0	0.0	79.9	5.4	-1.7	0.0	0.0	4.8	0.0	0.0	7.5
84	426080.39	5409381.88	341.58	0	DEN	1000	71.6	21.4	0.0	0.0	0.0	79.9	10.2	-1.7	0.0	0.0	4.8	0.0	0.0	-0.2
84	426080.39	5409381.88	341.58	0	DEN	2000	67.9	21.4	0.0	0.0	0.0	79.9	27.0	-1.7	0.0	0.0	4.9	0.0	0.0	-20.7

Line Source, ISO 9613, Name: "TRL_OP-PAG", ID: ""																					
Nr.	X	Y	Z	Refl.	DEN	Freq.	Lw	l/a	Optime	K0	Dc	Adiv	Aatm	Agr	Afol	Ahous	Abar	Cmet	RL	Lr
	(m)	(m)	(m)			(Hz)	dB(A)	dB	dB	(dB)	(dB)	(dB)	(dB)	(dB)	(dB)	(dB)	(dB)	(dB)	(dB)	dB(A)
84	426080.39	5409381.88	341.58	0	DEN	4000	63.5	21.4	0.0	0.0	0.0	79.9	91.4	-1.7	0.0	0.0	5.0	0.0	0.0	-89.7
84	426080.39	5409381.88	341.58	0	DEN	8000	57.7	21.4	0.0	0.0	0.0	79.9	326.0	-1.7	0.0	0.0	5.2	0.0	0.0	-330.3
85	426580.65	5409592.39	378.09	0	DEN	32	44.7	21.5	0.0	0.0	0.0	79.9	0.1	-5.7	0.0	0.0	0.0	0.0	0.0	-8.1
85	426580.65	5409592.39	378.09	0	DEN	63	67.1	21.5	0.0	0.0	0.0	79.9	0.3	-5.7	0.0	0.0	0.0	0.0	0.0	14.0
85	426580.65	5409592.39	378.09	0	DEN	125	80.4	21.5	0.0	0.0	0.0	79.9	1.1	4.1	0.0	0.0	0.0	0.0	0.0	16.7
85	426580.65	5409592.39	378.09	0	DEN	250	74.6	21.5	0.0	0.0	0.0	79.9	2.9	0.9	0.0	0.0	0.0	0.0	0.0	12.4
85	426580.65	5409592.39	378.09	0	DEN	500	74.5	21.5	0.0	0.0	0.0	79.9	5.4	-1.2	0.0	0.0	0.0	0.0	0.0	11.9
85	426580.65	5409592.39	378.09	0	DEN	1000	71.6	21.5	0.0	0.0	0.0	79.9	10.2	-1.2	0.0	0.0	0.0	0.0	0.0	4.2
85	426580.65	5409592.39	378.09	0	DEN	2000	67.9	21.5	0.0	0.0	0.0	79.9	26.9	-1.2	0.0	0.0	0.0	0.0	0.0	-16.2
85	426580.65	5409592.39	378.09	0	DEN	4000	63.5	21.5	0.0	0.0	0.0	79.9	91.1	-1.2	0.0	0.0	0.0	0.0	0.0	-84.8
85	426580.65	5409592.39	378.09	0	DEN	8000	57.7	21.5	0.0	0.0	0.0	79.9	324.9	-1.2	0.0	0.0	0.0	0.0	0.0	-324.4
87	427333.70	5409813.61	388.46	0	DEN	32	44.7	21.7	0.0	0.0	0.0	80.1	0.1	-5.7	0.0	0.0	4.8	0.0	0.0	-12.9
87	427333.70	5409813.61	388.46	0	DEN	63	67.1	21.7	0.0	0.0	0.0	80.1	0.3	-5.7	0.0	0.0	4.8	0.0	0.0	9.2
87	427333.70	5409813.61	388.46	0	DEN	125	80.4	21.7	0.0	0.0	0.0	80.1	1.2	1.2	0.0	0.0	3.6	0.0	0.0	16.0
87	427333.70	5409813.61	388.46	0	DEN	250	74.6	21.7	0.0	0.0	0.0	80.1	3.0	-1.2	0.0	0.0	4.8	0.0	0.0	9.6
87	427333.70	5409813.61	388.46	0	DEN	500	74.5	21.7	0.0	0.0	0.0	80.1	5.5	-2.6	0.0	0.0	4.8	0.0	0.0	8.3
87	427333.70	5409813.61	388.46	0	DEN	1000	71.6	21.7	0.0	0.0	0.0	80.1	10.5	-2.6	0.0	0.0	4.8	0.0	0.0	0.5
87	427333.70	5409813.61	388.46	0	DEN	2000	67.9	21.7	0.0	0.0	0.0	80.1	27.7	-2.6	0.0	0.0	4.8	0.0	0.0	-20.4
87	427333.70	5409813.61	388.46	0	DEN	4000	63.5	21.7	0.0	0.0	0.0	80.1	93.9	-2.6	0.0	0.0	4.8	0.0	0.0	-91.0
87	427333.70	5409813.61	388.46	0	DEN	8000	57.7	21.7	0.0	0.0	0.0	80.1	334.8	-2.6	0.0	0.0	4.8	0.0	0.0	-337.7
99	426860.96	5409699.37	379.78	0	DEN	32	44.7	20.1	0.0	0.0	0.0	80.0	0.1	-5.7	0.0	0.0	0.0	0.0	0.0	-9.5
99	426860.96	5409699.37	379.78	0	DEN	63	67.1	20.1	0.0	0.0	0.0	80.0	0.3	-5.7	0.0	0.0	0.0	0.0	0.0	12.6
99	426860.96	5409699.37	379.78	0	DEN	125	80.4	20.1	0.0	0.0	0.0	80.0	1.2	1.7	0.0	0.0	0.0	0.0	0.0	17.7
99	426860.96	5409699.37	379.78	0	DEN	250	74.6	20.1	0.0	0.0	0.0	80.0	2.9	-0.7	0.0	0.0	0.0	0.0	0.0	12.5
99	426860.96	5409699.37	379.78	0	DEN	500	74.5	20.1	0.0	0.0	0.0	80.0	5.4	-2.1	0.0	0.0	0.0	0.0	0.0	11.3
99	426860.96	5409699.37	379.78	0	DEN	1000	71.6	20.1	0.0	0.0	0.0	80.0	10.3	-2.1	0.0	0.0	0.0	0.0	0.0	3.6
99	426860.96	5409699.37	379.78	0	DEN	2000	67.9	20.1	0.0	0.0	0.0	80.0	27.2	-2.1	0.0	0.0	0.0	0.0	0.0	-17.0
99	426860.96	5409699.37	379.78	0	DEN	4000	63.5	20.1	0.0	0.0	0.0	80.0	92.1	-2.1	0.0	0.0	0.0	0.0	0.0	-86.3
99	426860.96	5409699.37	379.78	0	DEN	8000	57.7	20.1	0.0	0.0	0.0	80.0	328.4	-2.1	0.0	0.0	0.0	0.0	0.0	-328.5
102	427519.35	5409885.10	381.51	0	DEN	32	44.7	20.2	0.0	0.0	0.0	80.3	0.1	-5.7	0.0	0.0	4.8	0.0	0.0	-14.5
102	427519.35	5409885.10	381.51	0	DEN	63	67.1	20.2	0.0	0.0	0.0	80.3	0.4	-5.7	0.0	0.0	4.8	0.0	0.0	7.6
102	427519.35	5409885.10	381.51	0	DEN	125	80.4	20.2	0.0	0.0	0.0	80.3	1.2	1.2	0.0	0.0	3.5	0.0	0.0	14.3
102	427519.35	5409885.10	381.51	0	DEN	250	74.6	20.2	0.0	0.0	0.0	80.3	3.1	-1.2	0.0	0.0	4.8	0.0	0.0	7.9
102	427519.35	5409885.10	381.51	0	DEN	500	74.5	20.2	0.0	0.0	0.0	80.3	5.7	-2.6	0.0	0.0	4.8	0.0	0.0	6.5
102	427519.35	5409885.10	381.51	0	DEN	1000	71.6	20.2	0.0	0.0	0.0	80.3	10.7	-2.6	0.0	0.0	4.8	0.0	0.0	-1.4
102	427519.35	5409885.10	381.51	0	DEN	2000	67.9	20.2	0.0	0.0	0.0	80.3	28.4	-2.6	0.0	0.0	4.8	0.0	0.0	-22.8
102	427519.35	5409885.10	381.51	0	DEN	4000	63.5	20.2	0.0	0.0	0.0	80.3	96.1	-2.6	0.0	0.0	4.8	0.0	0.0	-94.9
102	427519.35	5409885.10	381.51	0	DEN	8000	57.7	20.2	0.0	0.0	0.0	80.3	342.9	-2.6	0.0	0.0	4.8	0.0	0.0	-347.5
104	426954.21	5409723.21	387.28	0	DEN	32	44.7	19.6	0.0	0.0	0.0	80.0	0.1	-5.7	0.0	0.0	0.0	0.0	0.0	-10.0
104	426954.21	5409723.21	387.28	0	DEN	63	67.1	19.6	0.0	0.0	0.0	80.0	0.3	-5.7	0.0	0.0	0.0	0.0	0.0	12.1
104	426954.21	5409723.21	387.28	0	DEN	125	80.4	19.6	0.0	0.0	0.0	80.0	1.2	1.8	0.0	0.0	0.0	0.0	0.0	17.1
104	426954.21	5409723.21	387.28	0	DEN	250	74.6	19.6	0.0	0.0	0.0	80.0	2.9	-0.7	0.0	0.0	0.0	0.0	0.0	12.0
104	426954.21	5409723.21	387.28	0	DEN	500	74.5	19.6	0.0	0.0	0.0	80.0	5.4	-2.1	0.0	0.0	0.0	0.0	0.0	10.8
104	426954.21	5409723.21	387.28	0	DEN	1000	71.6	19.6	0.0	0.0	0.0	80.0	10.3	-2.1	0.0	0.0	0.0	0.0	0.0	3.0
104	426954.21	5409723.21	387.28	0	DEN	2000	67.9	19.6	0.0	0.0	0.0	80.0	27.2	-2.1	0.0	0.0	0.0	0.0	0.0	-17.6
104	426954.21	5409723.21	387.28	0	DEN	4000	63.5	19.6	0.0	0.0	0.0	80.0	92.3	-2.1	0.0	0.0	0.0	0.0	0.0	-87.1
104	426954.21	5409723.21	387.28	0	DEN	8000	57.7	19.6	0.0	0.0	0.0	80.0	329.1	-2.1	0.0	0.0	0.0	0.0	0.0	-329.7
108	426184.20	5409402.91	351.81	0	DEN	32	44.7	19.1	0.0	0.0	0.0	79.8	0.1	-5.7	0.0	0.0	4.8	0.0	0.0	-15.2
108	426184.20	5409402.91	351.81	0	DEN	63	67.1	19.1	0.0	0.0	0.0	79.8	0.3	-5.7	0.0	0.0	4.8	0.0	0.0	6.9
108	426184.20	5409402.91	351.81	0	DEN	125	80.4	19.1	0.0	0.0	0.0	79.8	1.1	2.1	0.0	0.0	2.7	0.0	0.0	13.7
108	426184.20	5409402.91	351.81	0	DEN	250	74.6	19.1	0.0	0.0	0.0	79.8	2.9	-0.3	0.0	0.0	4.9	0.0	0.0	6.4
108	426184.20	5409402.91	351.81	0	DEN	500	74.5	19.1	0.0	0.0	0.0	79.8	5.3	-1.7	0.0	0.0	5.0	0.0	0.0	5.2
108	426184.20	5409402.91	351.81	0	DEN	1000	71.6	19.1	0.0	0.0	0.0	79.8	10.1	-1.7	0.0	0.0	5.1	0.0	0.0	-2.7
108	426184.20	5409402.91	351.81	0	DEN	2000	67.9	19.1	0.0	0.0	0.0	79.8	26.7	-1.7	0.0	0.0	5.5	0.0	0.0	-23.3
108	426184.20	5409402.91	351.81	0	DEN	4000	63.5	19.1	0.0	0.0	0.0	79.8	90.4	-1.7	0.0	0.0	6.1	0.0	0.0	-92.0
108	426184.20	5409402.91	351.81	0	DEN	8000	57.7	19.1	0.0	0.0	0.0	79.8	322.4	-1.7	0.0	0.0	7.1	0.0	0.0	-330.8
136	426315.73	5409599.88	366.27	0	DEN	32	44.7	17.3	0.0	0.0	0.0	80.2	0.1	-5.7	0.0	0.0	4.8	0.0	0.0	-17.3
136	426315.73	5409599.88	366.27	0	DEN	63	67.1	17.3	0.0	0.0	0.0	80.2	0.4	-5.7	0.0	0.0	4.8	0.0	0.0	4.8
136	426315.73	5409599.88	366.27	0	DEN	125	80.4	17.3	0.0	0.0	0.0	80.2	1.2	5.0	0.0	0.0	0.0	0.0	0.0	11.3
136	426315.73	5409599.88	366.27	0	DEN	250	74.6	17.3	0.0	0.0	0.0	80.2	3.0	1.5	0.0	0.0	3.2	0.0	0.0	3.9
136	426315.73	5409599.88	366.27	0	DEN	500	74.5	17.3	0.0	0.0	0.0	80.2	5.6	-0.9	0.0	0.0	4.8	0.0	0.0	2.2
136	426315.73	5409599.88	366.27	0	DEN	1000	71.6	17.3	0.0	0.0	0.0	80.2	10.5	-0.9	0.0	0.0	4.8	0.0	0.0	-5.7
136	426315.73	5409599.88	366.27	0	DEN	2000	67.9	17.3	0.0	0.0	0.0	80.2	27.8	-0.9	0.0	0.0	4.8	0.0	0.0	-26.7

Line Source, ISO 9613, Name: "TRL_OP-PAG", ID: ""																				
Nr.	X	Y	Z	Refl.	DEN	Freq.	Lw	l/a	Optime	K0	Dc	Adiv	Aatm	Agr	Afol	Ahous	Abar	Cmet	RL	Lr
	(m)	(m)	(m)			(Hz)	dB(A)	dB	dB	(dB)	(dB)	(dB)	(dB)	(dB)	(dB)	(dB)	(dB)	(dB)	(dB)	dB(A)
136	426315.73	5409599.88	366.27	0	DEN	4000	63.5	17.3	0.0	0.0	0.0	80.2	94.4	-0.9	0.0	0.0	4.8	0.0	0.0	-97.6
136	426315.73	5409599.88	366.27	0	DEN	8000	57.7	17.3	0.0	0.0	0.0	80.2	336.7	-0.9	0.0	0.0	4.8	0.0	0.0	-345.7
149	427421.22	5409840.08	384.77	0	DEN	32	44.7	16.0	0.0	0.0	0.0	80.2	0.1	-5.7	0.0	0.0	4.8	0.0	0.0	-18.7
149	427421.22	5409840.08	384.77	0	DEN	63	67.1	16.0	0.0	0.0	0.0	80.2	0.4	-5.7	0.0	0.0	4.8	0.0	0.0	3.5
149	427421.22	5409840.08	384.77	0	DEN	125	80.4	16.0	0.0	0.0	0.0	80.2	1.2	1.2	0.0	0.0	3.5	0.0	0.0	10.2
149	427421.22	5409840.08	384.77	0	DEN	250	74.6	16.0	0.0	0.0	0.0	80.2	3.0	-1.2	0.0	0.0	4.8	0.0	0.0	3.8
149	427421.22	5409840.08	384.77	0	DEN	500	74.5	16.0	0.0	0.0	0.0	80.2	5.6	-2.6	0.0	0.0	4.8	0.0	0.0	2.5
149	427421.22	5409840.08	384.77	0	DEN	1000	71.6	16.0	0.0	0.0	0.0	80.2	10.6	-2.6	0.0	0.0	4.8	0.0	0.0	-5.4
149	427421.22	5409840.08	384.77	0	DEN	2000	67.9	16.0	0.0	0.0	0.0	80.2	27.9	-2.6	0.0	0.0	4.8	0.0	0.0	-26.4
149	427421.22	5409840.08	384.77	0	DEN	4000	63.5	16.0	0.0	0.0	0.0	80.2	94.6	-2.6	0.0	0.0	4.8	0.0	0.0	-97.6
149	427421.22	5409840.08	384.77	0	DEN	8000	57.7	16.0	0.0	0.0	0.0	80.2	337.6	-2.6	0.0	0.0	4.8	0.0	0.0	-346.3
151	427452.66	5409861.77	382.82	0	DEN	32	44.7	15.7	0.0	0.0	0.0	80.3	0.1	-5.7	0.0	0.0	4.8	0.0	0.0	-19.1
151	427452.66	5409861.77	382.82	0	DEN	63	67.1	15.7	0.0	0.0	0.0	80.3	0.4	-5.7	0.0	0.0	4.8	0.0	0.0	3.1
151	427452.66	5409861.77	382.82	0	DEN	125	80.4	15.7	0.0	0.0	0.0	80.3	1.2	1.2	0.0	0.0	3.5	0.0	0.0	9.8
151	427452.66	5409861.77	382.82	0	DEN	250	74.6	15.7	0.0	0.0	0.0	80.3	3.0	-1.2	0.0	0.0	4.8	0.0	0.0	3.4
151	427452.66	5409861.77	382.82	0	DEN	500	74.5	15.7	0.0	0.0	0.0	80.3	5.6	-2.6	0.0	0.0	4.8	0.0	0.0	2.1
151	427452.66	5409861.77	382.82	0	DEN	1000	71.6	15.7	0.0	0.0	0.0	80.3	10.6	-2.6	0.0	0.0	4.8	0.0	0.0	-5.8
151	427452.66	5409861.77	382.82	0	DEN	2000	67.9	15.7	0.0	0.0	0.0	80.3	28.1	-2.6	0.0	0.0	4.8	0.0	0.0	-27.0
151	427452.66	5409861.77	382.82	0	DEN	4000	63.5	15.7	0.0	0.0	0.0	80.3	95.4	-2.6	0.0	0.0	4.8	0.0	0.0	-98.7
151	427452.66	5409861.77	382.82	0	DEN	8000	57.7	15.7	0.0	0.0	0.0	80.3	340.1	-2.6	0.0	0.0	4.8	0.0	0.0	-349.2

Point Source, ISO 9613, Name: "TD17", ID: ""																				
Nr.	X	Y	Z	Refl.	DEN	Freq.	Lw	l/a	Optime	K0	Dc	Adiv	Aatm	Agr	Afol	Ahous	Abar	Cmet	RL	Lr
	(m)	(m)	(m)			(Hz)	dB(A)	dB	dB	(dB)	(dB)	(dB)	(dB)	(dB)	(dB)	(dB)	(dB)	(dB)	(dB)	dB(A)
166	423583.30	5411456.89	364.00	0	D	32	60.4	0.0	0.0	0.0	0.0	86.5	0.2	-5.9	0.0	0.0	0.0	0.0	0.0	-20.4
166	423583.30	5411456.89	364.00	0	D	63	76.8	0.0	0.0	0.0	0.0	86.5	0.7	-5.9	0.0	0.0	0.0	0.0	0.0	-4.5
166	423583.30	5411456.89	364.00	0	D	125	90.3	0.0	0.0	0.0	0.0	86.5	2.4	1.0	0.0	0.0	0.0	0.0	0.0	0.4
166	423583.30	5411456.89	364.00	0	D	250	98.5	0.0	0.0	0.0	0.0	86.5	6.2	-1.5	0.0	0.0	0.0	0.0	0.0	7.3
166	423583.30	5411456.89	364.00	0	D	500	102.8	0.0	0.0	0.0	0.0	86.5	11.4	-2.9	0.0	0.0	0.0	0.0	0.0	7.8
166	423583.30	5411456.89	364.00	0	D	1000	104.6	0.0	0.0	0.0	0.0	86.5	21.7	-2.9	0.0	0.0	0.0	0.0	0.0	-0.7
166	423583.30	5411456.89	364.00	0	D	2000	105.1	0.0	0.0	0.0	0.0	86.5	57.4	-2.9	0.0	0.0	0.0	0.0	0.0	-35.9
166	423583.30	5411456.89	364.00	0	D	4000	101.2	0.0	0.0	0.0	0.0	86.5	194.5	-2.9	0.0	0.0	0.0	0.0	0.0	-176.9
166	423583.30	5411456.89	364.00	0	D	8000	92.1	0.0	0.0	0.0	0.0	86.5	693.9	-2.9	0.0	0.0	0.0	0.0	0.0	-685.4
166	423583.30	5411456.89	364.00	0	N	32	60.4	0.0	-188.0	0.0	0.0	86.5	0.2	-5.9	0.0	0.0	0.0	0.0	0.0	-208.4
166	423583.30	5411456.89	364.00	0	N	63	76.8	0.0	-188.0	0.0	0.0	86.5	0.7	-5.9	0.0	0.0	0.0	0.0	0.0	-192.5
166	423583.30	5411456.89	364.00	0	N	125	90.3	0.0	-188.0	0.0	0.0	86.5	2.4	1.0	0.0	0.0	0.0	0.0	0.0	-187.6
166	423583.30	5411456.89	364.00	0	N	250	98.5	0.0	-188.0	0.0	0.0	86.5	6.2	-1.5	0.0	0.0	0.0	0.0	0.0	-180.7
166	423583.30	5411456.89	364.00	0	N	500	102.8	0.0	-188.0	0.0	0.0	86.5	11.4	-2.9	0.0	0.0	0.0	0.0	0.0	-180.2
166	423583.30	5411456.89	364.00	0	N	1000	104.6	0.0	-188.0	0.0	0.0	86.5	21.7	-2.9	0.0	0.0	0.0	0.0	0.0	-188.7
166	423583.30	5411456.89	364.00	0	N	2000	105.1	0.0	-188.0	0.0	0.0	86.5	57.4	-2.9	0.0	0.0	0.0	0.0	0.0	-223.9
166	423583.30	5411456.89	364.00	0	N	4000	101.2	0.0	-188.0	0.0	0.0	86.5	194.5	-2.9	0.0	0.0	0.0	0.0	0.0	-364.9
166	423583.30	5411456.89	364.00	0	N	8000	92.1	0.0	-188.0	0.0	0.0	86.5	693.9	-2.9	0.0	0.0	0.0	0.0	0.0	-873.4
166	423583.30	5411456.89	364.00	0	E	32	60.4	0.0	-188.0	0.0	0.0	86.5	0.2	-5.9	0.0	0.0	0.0	0.0	0.0	-208.4
166	423583.30	5411456.89	364.00	0	E	63	76.8	0.0	-188.0	0.0	0.0	86.5	0.7	-5.9	0.0	0.0	0.0	0.0	0.0	-192.5
166	423583.30	5411456.89	364.00	0	E	125	90.3	0.0	-188.0	0.0	0.0	86.5	2.4	1.0	0.0	0.0	0.0	0.0	0.0	-187.6
166	423583.30	5411456.89	364.00	0	E	250	98.5	0.0	-188.0	0.0	0.0	86.5	6.2	-1.5	0.0	0.0	0.0	0.0	0.0	-180.7
166	423583.30	5411456.89	364.00	0	E	500	102.8	0.0	-188.0	0.0	0.0	86.5	11.4	-2.9	0.0	0.0	0.0	0.0	0.0	-180.2
166	423583.30	5411456.89	364.00	0	E	1000	104.6	0.0	-188.0	0.0	0.0	86.5	21.7	-2.9	0.0	0.0	0.0	0.0	0.0	-188.7
166	423583.30	5411456.89	364.00	0	E	2000	105.1	0.0	-188.0	0.0	0.0	86.5	57.4	-2.9	0.0	0.0	0.0	0.0	0.0	-223.9
166	423583.30	5411456.89	364.00	0	E	4000	101.2	0.0	-188.0	0.0	0.0	86.5	194.5	-2.9	0.0	0.0	0.0	0.0	0.0	-364.9
166	423583.30	5411456.89	364.00	0	E	8000	92.1	0.0	-188.0	0.0	0.0	86.5	693.9	-2.9	0.0	0.0	0.0	0.0	0.0	-873.4

Line Source, ISO 9613, Name: "TRL_OP-Mill", ID: ""																				
Nr.	X	Y	Z	Refl.	DEN	Freq.	Lw	l/a	Optime	K0	Dc	Adiv	Aatm	Agr	Afol	Ahous	Abar	Cmet	RL	Lr
	(m)	(m)	(m)			(Hz)	dB(A)	dB	dB	(dB)	(dB)	(dB)	(dB)	(dB)	(dB)	(dB)	(dB)	(dB)	(dB)	dB(A)
106	425903.49	5409397.40	331.88	0	DEN	32	40.4	23.8	0.0	0.0	0.0	80.2	0.1	-5.7	0.0	0.0	4.8	0.0	0.0	-15.1
106	425903.49	5409397.40	331.88	0	DEN	63	62.8	23.8	0.0	0.0	0.0	80.2	0.4	-5.7	0.0	0.0	4.8	0.0	0.0	7.0
106	425903.49	5409397.40	331.88	0	DEN	125	76.1	23.8	0.0	0.0	0.0	80.2	1.2	2.2	0.0	0.0	2.6	0.0	0.0	13.7
106	425903.49	5409397.40	331.88	0	DEN	250	70.3	23.8	0.0	0.0	0.0	80.2	3.0	-0.2	0.0	0.0	4.8	0.0	0.0	6.3
106	425903.49	5409397.40	331.88	0	DEN	500	70.2	23.8	0.0	0.0	0.0	80.2	5.6	-1.6	0.0	0.0	4.8	0.0	0.0	5.1
106	425903.49	5409397.40	331.88	0	DEN	1000	67.3	23.8	0.0	0.0	0.0	80.2	10.6	-1.6	0.0	0.0	4.8	0.0	0.0	-2.9
106	425903.49	5409397.40	331.88	0	DEN	2000	63.6	23.8	0.0	0.0	0.0	80.2	28.0	-1.6	0.0	0.0	4.9	0.0	0.0	-24.0
106	425903.49	5409397.40	331.88	0	DEN	4000	59.2	23.8	0.0	0.0	0.0	80.2	94.8	-1.6	0.0	0.0	4.9	0.0	0.0	-95.3

Line Source, ISO 9613, Name: "TRL_OP-Mill", ID: ""																				
Nr.	X	Y	Z	Refl.	DEN	Freq.	Lw	l/a	Optime	K0	Dc	Adiv	Aatm	Agr	Afol	Ahous	Abar	Cmet	RL	Lr
	(m)	(m)	(m)			(Hz)	dB(A)	dB	dB	(dB)	(dB)	(dB)	(dB)	(dB)	(dB)	(dB)	(dB)	(dB)	(dB)	dB(A)
106	425903.49	5409397.40	331.88	0	DEN	8000	53.4	23.8	0.0	0.0	0.0	80.2	338.2	-1.6	0.0	0.0	5.1	0.0	0.0	-344.7
120	426679.20	5410062.91	390.08	0	DEN	32	40.4	23.8	0.0	0.0	0.0	81.1	0.1	-5.8	0.0	0.0	4.8	0.0	0.0	-16.0
120	426679.20	5410062.91	390.08	0	DEN	63	62.8	23.8	0.0	0.0	0.0	81.1	0.4	-5.8	0.0	0.0	4.8	0.0	0.0	6.1
120	426679.20	5410062.91	390.08	0	DEN	125	76.1	23.8	0.0	0.0	0.0	81.1	1.3	1.5	0.0	0.0	3.3	0.0	0.0	12.8
120	426679.20	5410062.91	390.08	0	DEN	250	70.3	23.8	0.0	0.0	0.0	81.1	3.3	-1.0	0.0	0.0	4.8	0.0	0.0	5.9
120	426679.20	5410062.91	390.08	0	DEN	500	70.2	23.8	0.0	0.0	0.0	81.1	6.2	-2.4	0.0	0.0	4.8	0.0	0.0	4.4
120	426679.20	5410062.91	390.08	0	DEN	1000	67.3	23.8	0.0	0.0	0.0	81.1	11.7	-2.4	0.0	0.0	4.8	0.0	0.0	-4.1
120	426679.20	5410062.91	390.08	0	DEN	2000	63.6	23.8	0.0	0.0	0.0	81.1	31.0	-2.4	0.0	0.0	4.8	0.0	0.0	-27.0
120	426679.20	5410062.91	390.08	0	DEN	4000	59.2	23.8	0.0	0.0	0.0	81.1	105.0	-2.4	0.0	0.0	4.8	0.0	0.0	-105.5
120	426679.20	5410062.91	390.08	0	DEN	8000	53.4	23.8	0.0	0.0	0.0	81.1	374.6	-2.4	0.0	0.0	4.8	0.0	0.0	-380.8
122	426260.61	5409507.61	362.88	0	DEN	32	40.4	22.6	0.0	0.0	0.0	80.0	0.1	-5.7	0.0	0.0	4.8	0.0	0.0	-16.1
122	426260.61	5409507.61	362.88	0	DEN	63	62.8	22.6	0.0	0.0	0.0	80.0	0.3	-5.7	0.0	0.0	4.8	0.0	0.0	6.1
122	426260.61	5409507.61	362.88	0	DEN	125	76.1	22.6	0.0	0.0	0.0	80.0	1.2	2.3	0.0	0.0	2.5	0.0	0.0	12.8
122	426260.61	5409507.61	362.88	0	DEN	250	70.3	22.6	0.0	0.0	0.0	80.0	2.9	-0.1	0.0	0.0	4.8	0.0	0.0	5.4
122	426260.61	5409507.61	362.88	0	DEN	500	70.2	22.6	0.0	0.0	0.0	80.0	5.4	-1.5	0.0	0.0	4.8	0.0	0.0	4.2
122	426260.61	5409507.61	362.88	0	DEN	1000	67.3	22.6	0.0	0.0	0.0	80.0	10.3	-1.5	0.0	0.0	4.8	0.0	0.0	-3.6
122	426260.61	5409507.61	362.88	0	DEN	2000	63.6	22.6	0.0	0.0	0.0	80.0	27.2	-1.5	0.0	0.0	4.8	0.0	0.0	-24.2
122	426260.61	5409507.61	362.88	0	DEN	4000	59.2	22.6	0.0	0.0	0.0	80.0	92.4	-1.5	0.0	0.0	4.8	0.0	0.0	-93.8
122	426260.61	5409507.61	362.88	0	DEN	8000	53.4	22.6	0.0	0.0	0.0	80.0	329.5	-1.5	0.0	0.0	4.8	0.0	0.0	-336.7
124	425688.37	5409424.96	316.47	0	DEN	32	40.4	22.9	0.0	0.0	0.0	80.6	0.1	-5.7	0.0	0.0	4.8	0.0	0.0	-16.5
124	425688.37	5409424.96	316.47	0	DEN	63	62.8	22.9	0.0	0.0	0.0	80.6	0.4	-5.7	0.0	0.0	4.8	0.0	0.0	5.7
124	425688.37	5409424.96	316.47	0	DEN	125	76.1	22.9	0.0	0.0	0.0	80.6	1.2	2.3	0.0	0.0	2.5	0.0	0.0	12.3
124	425688.37	5409424.96	316.47	0	DEN	250	70.3	22.9	0.0	0.0	0.0	80.6	3.2	-0.2	0.0	0.0	4.9	0.0	0.0	4.7
124	425688.37	5409424.96	316.47	0	DEN	500	70.2	22.9	0.0	0.0	0.0	80.6	5.9	-1.6	0.0	0.0	5.0	0.0	0.0	3.3
124	425688.37	5409424.96	316.47	0	DEN	1000	67.3	22.9	0.0	0.0	0.0	80.6	11.1	-1.6	0.0	0.0	5.1	0.0	0.0	-5.1
124	425688.37	5409424.96	316.47	0	DEN	2000	63.6	22.9	0.0	0.0	0.0	80.6	29.3	-1.6	0.0	0.0	5.5	0.0	0.0	-27.3
124	425688.37	5409424.96	316.47	0	DEN	4000	59.2	22.9	0.0	0.0	0.0	80.6	99.5	-1.6	0.0	0.0	6.1	0.0	0.0	-102.5
124	425688.37	5409424.96	316.47	0	DEN	8000	53.4	22.9	0.0	0.0	0.0	80.6	354.9	-1.6	0.0	0.0	7.1	0.0	0.0	-364.8
128	426364.46	5409644.32	369.88	0	DEN	32	40.4	22.3	0.0	0.0	0.0	80.3	0.1	-5.7	0.0	0.0	4.8	0.0	0.0	-16.6
128	426364.46	5409644.32	369.88	0	DEN	63	62.8	22.3	0.0	0.0	0.0	80.3	0.4	-5.7	0.0	0.0	4.8	0.0	0.0	5.5
128	426364.46	5409644.32	369.88	0	DEN	125	76.1	22.3	0.0	0.0	0.0	80.3	1.2	2.0	0.0	0.0	2.8	0.0	0.0	12.2
128	426364.46	5409644.32	369.88	0	DEN	250	70.3	22.3	0.0	0.0	0.0	80.3	3.0	-0.5	0.0	0.0	4.8	0.0	0.0	5.1
128	426364.46	5409644.32	369.88	0	DEN	500	70.2	22.3	0.0	0.0	0.0	80.3	5.6	-1.9	0.0	0.0	4.8	0.0	0.0	3.9
128	426364.46	5409644.32	369.88	0	DEN	1000	67.3	22.3	0.0	0.0	0.0	80.3	10.6	-1.9	0.0	0.0	4.8	0.0	0.0	-4.0
128	426364.46	5409644.32	369.88	0	DEN	2000	63.6	22.3	0.0	0.0	0.0	80.3	28.1	-1.9	0.0	0.0	4.8	0.0	0.0	-25.2
128	426364.46	5409644.32	369.88	0	DEN	4000	59.2	22.3	0.0	0.0	0.0	80.3	95.1	-1.9	0.0	0.0	4.8	0.0	0.0	-96.7
128	426364.46	5409644.32	369.88	0	DEN	8000	53.4	22.3	0.0	0.0	0.0	80.3	339.3	-1.9	0.0	0.0	4.8	0.0	0.0	-346.6
129	425499.74	5409457.81	299.87	0	DEN	32	40.4	22.8	0.0	0.0	0.0	81.0	0.1	-5.8	0.0	0.0	5.2	0.0	0.0	-17.3
129	425499.74	5409457.81	299.87	0	DEN	63	62.8	22.8	0.0	0.0	0.0	81.0	0.4	-5.8	0.0	0.0	5.5	0.0	0.0	4.4
129	425499.74	5409457.81	299.87	0	DEN	125	76.1	22.8	0.0	0.0	0.0	81.0	1.3	2.2	0.0	0.0	4.0	0.0	0.0	10.4
129	425499.74	5409457.81	299.87	0	DEN	250	70.3	22.8	0.0	0.0	0.0	81.0	3.3	-0.3	0.0	0.0	7.2	0.0	0.0	1.9
129	425499.74	5409457.81	299.87	0	DEN	500	70.2	22.8	0.0	0.0	0.0	81.0	6.1	-1.7	0.0	0.0	8.8	0.0	0.0	-1.2
129	425499.74	5409457.81	299.87	0	DEN	1000	67.3	22.8	0.0	0.0	0.0	81.0	11.6	-1.7	0.0	0.0	10.8	0.0	0.0	-11.6
129	425499.74	5409457.81	299.87	0	DEN	2000	63.6	22.8	0.0	0.0	0.0	81.0	30.7	-1.7	0.0	0.0	13.3	0.0	0.0	-36.9
129	425499.74	5409457.81	299.87	0	DEN	4000	59.2	22.8	0.0	0.0	0.0	81.0	104.1	-1.7	0.0	0.0	16.0	0.0	0.0	-117.3
129	425499.74	5409457.81	299.87	0	DEN	8000	53.4	22.8	0.0	0.0	0.0	81.0	371.2	-1.7	0.0	0.0	18.8	0.0	0.0	-393.1
130	426489.51	5409758.77	376.62	0	DEN	32	40.4	22.3	0.0	0.0	0.0	80.4	0.1	-5.7	0.0	0.0	4.8	0.0	0.0	-16.8
130	426489.51	5409758.77	376.62	0	DEN	63	62.8	22.3	0.0	0.0	0.0	80.4	0.4	-5.7	0.0	0.0	4.8	0.0	0.0	5.3
130	426489.51	5409758.77	376.62	0	DEN	125	76.1	22.3	0.0	0.0	0.0	80.4	1.2	2.0	0.0	0.0	2.7	0.0	0.0	12.0
130	426489.51	5409758.77	376.62	0	DEN	250	70.3	22.3	0.0	0.0	0.0	80.4	3.1	-0.4	0.0	0.0	4.8	0.0	0.0	4.7
130	426489.51	5409758.77	376.62	0	DEN	500	70.2	22.3	0.0	0.0	0.0	80.4	5.7	-1.9	0.0	0.0	4.8	0.0	0.0	3.4
130	426489.51	5409758.77	376.62	0	DEN	1000	67.3	22.3	0.0	0.0	0.0	80.4	10.9	-1.9	0.0	0.0	4.8	0.0	0.0	-4.6
130	426489.51	5409758.77	376.62	0	DEN	2000	63.6	22.3	0.0	0.0	0.0	80.4	28.7	-1.9	0.0	0.0	4.8	0.0	0.0	-26.1
130	426489.51	5409758.77	376.62	0	DEN	4000	59.2	22.3	0.0	0.0	0.0	80.4	97.2	-1.9	0.0	0.0	4.8	0.0	0.0	-99.1
130	426489.51	5409758.77	376.62	0	DEN	8000	53.4	22.3	0.0	0.0	0.0	80.4	346.7	-1.9	0.0	0.0	4.8	0.0	0.0	-354.4
133	425549.54	5409548.94	266.36	0	DEN	32	40.4	22.6	0.0	0.0	0.0	81.2	0.1	-5.8	0.0	0.0	17.8	0.0	0.0	-30.3
133	425549.54	5409548.94	266.36	0	DEN	63	62.8	22.6	0.0	0.0	0.0	81.2	0.4	-5.8	0.0	0.0	20.0	0.0	0.0	-10.3
133	425549.54	5409548.94	266.36	0	DEN	125	76.1	22.6	0.0	0.0	0.0	81.2	1.3	2.1	0.0	0.0	17.9	0.0	0.0	-3.7
133	425549.54	5409548.94	266.36	0	DEN	250	70.3	22.6	0.0	0.0	0.0	81.2	3.4	-0.4	0.0	0.0	20.0	0.0	0.0	-11.2
133	425549.54	5409548.94	266.36	0	DEN	500	70.2	22.6	0.0	0.0	0.0	81.2	6.2	-1.8	0.0	0.0	20.0	0.0	0.0	-12.7
133	425549.54	5409548.94	266.36	0	DEN	1000	67.3	22.6	0.0	0.0	0.0	81.2	11.8	-1.8	0.0	0.0	20.0	0.0	0.0	-21.2
133	425549.54	5409548.94	266.36	0	DEN	2000	63.6	22.6	0.0	0.0	0.0	81.2	31.1	-1.8	0.0	0.0	20.0	0.0	0.0	-44.2
133	425549.54	5409548.94	266.36	0	DEN	4000	59.2	22.6	0.0	0.0	0.0	81.2	105.5	-1.8	0.0	0.0	20.0	0.0	0.0	-123.0

Line Source, ISO 9613, Name: "TRL_OP-Mill", ID: ""																				
Nr.	X	Y	Z	Refl.	DEN	Freq.	Lw	l/a	Optime	K0	Dc	Adiv	Aatm	Agr	Afol	Ahous	Abar	Cmet	RL	Lr
	(m)	(m)	(m)			(Hz)	dB(A)	dB	dB	(dB)	(dB)	(dB)	(dB)	(dB)	(dB)	(dB)	(dB)	(dB)	(dB)	dB(A)
133	425549.54	5409548.94	266.36	0	DEN	8000	53.4	22.6	0.0	0.0	0.0	81.2	376.3	-1.8	0.0	0.0	20.0	0.0	0.0	-399.6
135	425716.98	5409561.66	261.97	0	DEN	32	40.4	22.3	0.0	0.0	0.0	80.9	0.1	-5.8	0.0	0.0	18.4	0.0	0.0	-30.9
135	425716.98	5409561.66	261.97	0	DEN	63	62.8	22.3	0.0	0.0	0.0	80.9	0.4	-5.8	0.0	0.0	20.0	0.0	0.0	-10.4
135	425716.98	5409561.66	261.97	0	DEN	125	76.1	22.3	0.0	0.0	0.0	80.9	1.3	2.0	0.0	0.0	18.0	0.0	0.0	-3.7
135	425716.98	5409561.66	261.97	0	DEN	250	70.3	22.3	0.0	0.0	0.0	80.9	3.3	-0.4	0.0	0.0	20.0	0.0	0.0	-11.1
135	425716.98	5409561.66	261.97	0	DEN	500	70.2	22.3	0.0	0.0	0.0	80.9	6.0	-1.8	0.0	0.0	20.0	0.0	0.0	-12.6
135	425716.98	5409561.66	261.97	0	DEN	1000	67.3	22.3	0.0	0.0	0.0	80.9	11.5	-1.8	0.0	0.0	20.0	0.0	0.0	-20.9
135	425716.98	5409561.66	261.97	0	DEN	2000	63.6	22.3	0.0	0.0	0.0	80.9	30.3	-1.8	0.0	0.0	20.0	0.0	0.0	-43.5
135	425716.98	5409561.66	261.97	0	DEN	4000	59.2	22.3	0.0	0.0	0.0	80.9	102.7	-1.8	0.0	0.0	20.0	0.0	0.0	-120.3
135	425716.98	5409561.66	261.97	0	DEN	8000	53.4	22.3	0.0	0.0	0.0	80.9	366.4	-1.8	0.0	0.0	20.0	0.0	0.0	-389.7
137	426087.88	5409382.57	342.63	0	DEN	32	40.4	21.2	0.0	0.0	0.0	79.9	0.1	-5.7	0.0	0.0	4.8	0.0	0.0	-17.4
137	426087.88	5409382.57	342.63	0	DEN	63	62.8	21.2	0.0	0.0	0.0	79.9	0.3	-5.7	0.0	0.0	4.8	0.0	0.0	4.7
137	426087.88	5409382.57	342.63	0	DEN	125	76.1	21.2	0.0	0.0	0.0	79.9	1.1	2.1	0.0	0.0	2.6	0.0	0.0	11.5
137	426087.88	5409382.57	342.63	0	DEN	250	70.3	21.2	0.0	0.0	0.0	79.9	2.9	-0.3	0.0	0.0	4.8	0.0	0.0	4.3
137	426087.88	5409382.57	342.63	0	DEN	500	70.2	21.2	0.0	0.0	0.0	79.9	5.4	-1.7	0.0	0.0	4.8	0.0	0.0	3.1
137	426087.88	5409382.57	342.63	0	DEN	1000	67.3	21.2	0.0	0.0	0.0	79.9	10.2	-1.7	0.0	0.0	4.8	0.0	0.0	-4.6
137	426087.88	5409382.57	342.63	0	DEN	2000	63.6	21.2	0.0	0.0	0.0	79.9	26.9	-1.7	0.0	0.0	4.8	0.0	0.0	-25.1
137	426087.88	5409382.57	342.63	0	DEN	4000	59.2	21.2	0.0	0.0	0.0	79.9	91.3	-1.7	0.0	0.0	4.9	0.0	0.0	-94.0
137	426087.88	5409382.57	342.63	0	DEN	8000	53.4	21.2	0.0	0.0	0.0	79.9	325.7	-1.7	0.0	0.0	5.1	0.0	0.0	-334.3
138	425455.23	5409792.68	252.00	0	DEN	32	40.4	23.0	0.0	0.0	0.0	81.8	0.1	-5.8	0.0	0.0	17.5	0.0	0.0	-30.1
138	425455.23	5409792.68	252.00	0	DEN	63	62.8	23.0	0.0	0.0	0.0	81.8	0.4	-5.8	0.0	0.0	20.7	0.0	0.0	-11.2
138	425455.23	5409792.68	252.00	0	DEN	125	76.1	23.0	0.0	0.0	0.0	81.8	1.4	1.8	0.0	0.0	21.8	0.0	0.0	-7.7
138	425455.23	5409792.68	252.00	0	DEN	250	70.3	23.0	0.0	0.0	0.0	81.8	3.6	-0.6	0.0	0.0	25.0	0.0	0.0	-16.4
138	425455.23	5409792.68	252.00	0	DEN	500	70.2	23.0	0.0	0.0	0.0	81.8	6.7	-2.0	0.0	0.0	25.0	0.0	0.0	-18.2
138	425455.23	5409792.68	252.00	0	DEN	1000	67.3	23.0	0.0	0.0	0.0	81.8	12.7	-2.0	0.0	0.0	25.0	0.0	0.0	-27.1
138	425455.23	5409792.68	252.00	0	DEN	2000	63.6	23.0	0.0	0.0	0.0	81.8	33.6	-2.0	0.0	0.0	25.0	0.0	0.0	-51.7
138	425455.23	5409792.68	252.00	0	DEN	4000	59.2	23.0	0.0	0.0	0.0	81.8	113.8	-2.0	0.0	0.0	25.0	0.0	0.0	-136.3
138	425455.23	5409792.68	252.00	0	DEN	8000	53.4	23.0	0.0	0.0	0.0	81.8	405.9	-2.0	0.0	0.0	25.0	0.0	0.0	-434.2
139	426583.83	5409889.11	381.50	0	DEN	32	40.4	21.9	0.0	0.0	0.0	80.7	0.1	-5.8	0.0	0.0	4.8	0.0	0.0	-17.5
139	426583.83	5409889.11	381.50	0	DEN	63	62.8	21.9	0.0	0.0	0.0	80.7	0.4	-5.8	0.0	0.0	4.8	0.0	0.0	4.6
139	426583.83	5409889.11	381.50	0	DEN	125	76.1	21.9	0.0	0.0	0.0	80.7	1.3	1.6	0.0	0.0	3.2	0.0	0.0	11.3
139	426583.83	5409889.11	381.50	0	DEN	250	70.3	21.9	0.0	0.0	0.0	80.7	3.2	-0.9	0.0	0.0	4.8	0.0	0.0	4.5
139	426583.83	5409889.11	381.50	0	DEN	500	70.2	21.9	0.0	0.0	0.0	80.7	5.9	-2.3	0.0	0.0	4.8	0.0	0.0	3.0
139	426583.83	5409889.11	381.50	0	DEN	1000	67.3	21.9	0.0	0.0	0.0	80.7	11.2	-2.3	0.0	0.0	4.8	0.0	0.0	-5.2
139	426583.83	5409889.11	381.50	0	DEN	2000	63.6	21.9	0.0	0.0	0.0	80.7	29.6	-2.3	0.0	0.0	4.8	0.0	0.0	-27.3
139	426583.83	5409889.11	381.50	0	DEN	4000	59.2	21.9	0.0	0.0	0.0	80.7	100.3	-2.3	0.0	0.0	4.8	0.0	0.0	-102.4
139	426583.83	5409889.11	381.50	0	DEN	8000	53.4	21.9	0.0	0.0	0.0	80.7	357.9	-2.3	0.0	0.0	4.8	0.0	0.0	-365.8
141	425632.20	5409752.41	250.04	0	DEN	32	40.4	22.5	0.0	0.0	0.0	81.5	0.1	-5.8	0.0	0.0	9.1	0.0	0.0	-22.0
141	425632.20	5409752.41	250.04	0	DEN	63	62.8	22.5	0.0	0.0	0.0	81.5	0.4	-5.8	0.0	0.0	12.4	0.0	0.0	-3.2
141	425632.20	5409752.41	250.04	0	DEN	125	76.1	22.5	0.0	0.0	0.0	81.5	1.4	1.9	0.0	0.0	14.4	0.0	0.0	-0.5
141	425632.20	5409752.41	250.04	0	DEN	250	70.3	22.5	0.0	0.0	0.0	81.5	3.5	-0.6	0.0	0.0	19.8	0.0	0.0	-11.4
141	425632.20	5409752.41	250.04	0	DEN	500	70.2	22.5	0.0	0.0	0.0	81.5	6.4	-2.0	0.0	0.0	23.0	0.0	0.0	-16.2
141	425632.20	5409752.41	250.04	0	DEN	1000	67.3	22.5	0.0	0.0	0.0	81.5	12.2	-2.0	0.0	0.0	25.0	0.0	0.0	-26.9
141	425632.20	5409752.41	250.04	0	DEN	2000	63.6	22.5	0.0	0.0	0.0	81.5	32.3	-2.0	0.0	0.0	25.0	0.0	0.0	-50.7
141	425632.20	5409752.41	250.04	0	DEN	4000	59.2	22.5	0.0	0.0	0.0	81.5	109.5	-2.0	0.0	0.0	25.0	0.0	0.0	-132.3
141	425632.20	5409752.41	250.04	0	DEN	8000	53.4	22.5	0.0	0.0	0.0	81.5	390.5	-2.0	0.0	0.0	25.0	0.0	0.0	-419.1
145	425751.95	5409649.62	247.87	0	DEN	32	40.4	21.6	0.0	0.0	0.0	81.1	0.1	-5.8	0.0	0.0	7.0	0.0	0.0	-20.3
145	425751.95	5409649.62	247.87	0	DEN	63	62.8	21.6	0.0	0.0	0.0	81.1	0.4	-5.8	0.0	0.0	8.5	0.0	0.0	0.3
145	425751.95	5409649.62	247.87	0	DEN	125	76.1	21.6	0.0	0.0	0.0	81.1	1.3	2.0	0.0	0.0	8.5	0.0	0.0	5.0
145	425751.95	5409649.62	247.87	0	DEN	250	70.3	21.6	0.0	0.0	0.0	81.1	3.3	-0.5	0.0	0.0	12.8	0.0	0.0	-4.7
145	425751.95	5409649.62	247.87	0	DEN	500	70.2	21.6	0.0	0.0	0.0	81.1	6.1	-1.9	0.0	0.0	15.4	0.0	0.0	-8.9
145	425751.95	5409649.62	247.87	0	DEN	1000	67.3	21.6	0.0	0.0	0.0	81.1	11.7	-1.9	0.0	0.0	18.3	0.0	0.0	-20.2
145	425751.95	5409649.62	247.87	0	DEN	2000	63.6	21.6	0.0	0.0	0.0	81.1	30.8	-1.9	0.0	0.0	21.2	0.0	0.0	-45.9
145	425751.95	5409649.62	247.87	0	DEN	4000	59.2	21.6	0.0	0.0	0.0	81.1	104.5	-1.9	0.0	0.0	24.1	0.0	0.0	-127.0
145	425751.95	5409649.62	247.87	0	DEN	8000	53.4	21.6	0.0	0.0	0.0	81.1	372.8	-1.9	0.0	0.0	25.0	0.0	0.0	-402.0
146	425358.79	5409535.17	277.40	0	DEN	32	40.4	21.7	0.0	0.0	0.0	81.4	0.1	-5.8	0.0	0.0	5.1	0.0	0.0	-18.7
146	425358.79	5409535.17	277.40	0	DEN	63	62.8	21.7	0.0	0.0	0.0	81.4	0.4	-5.8	0.0	0.0	5.4	0.0	0.0	3.0
146	425358.79	5409535.17	277.40	0	DEN	125	76.1	21.7	0.0	0.0	0.0	81.4	1.4	2.1	0.0	0.0	3.9	0.0	0.0	9.1
146	425358.79	5409535.17	277.40	0	DEN	250	70.3	21.7	0.0	0.0	0.0	81.4	3.5	-0.4	0.0	0.0	6.9	0.0	0.0	0.6
146	425358.79	5409535.17	277.40	0	DEN	500	70.2	21.7	0.0	0.0	0.0	81.4	6.4	-1.8	0.0	0.0	8.4	0.0	0.0	-2.5
146	425358.79	5409535.17	277.40	0	DEN	1000	67.3	21.7	0.0	0.0	0.0	81.4	12.2	-1.8	0.0	0.0	10.3	0.0	0.0	-13.1
146	425358.79	5409535.17	277.40	0	DEN	2000	63.6	21.7	0.0	0.0	0.0	81.4	32.1	-1.8	0.0	0.0	12.6	0.0	0.0	-39.1
146	425358.79	5409535.17	277.40	0	DEN	4000	59.2	21.7	0.0	0.0	0.0	81.4	109.0	-1.8	0.0	0.0	15.3	0.0	0.0	-123.0

Line Source, ISO 9613, Name: "TRL_OP-Mill", ID: ""																					
Nr.	X	Y	Z	Refl.	DEN	Freq.	Lw	l/a	Optime	K0	Dc	Adiv	Aatm	Agr	Afol	Ahous	Abar	Cmet	RL	Lr
	(m)	(m)	(m)			(Hz)	dB(A)	dB	dB	(dB)	(dB)	(dB)	(dB)	(dB)	(dB)	(dB)	(dB)	(dB)	(dB)	dB(A)
146	425358.79	5409535.17	277.40	0	DEN	8000	53.4	21.7	0.0	0.0	0.0	81.4	388.6	-1.8	0.0	0.0	18.1	0.0	0.0	-411.2
147	425307.93	5409669.75	264.69	0	DEN	32	40.4	22.1	0.0	0.0	0.0	81.8	0.1	-5.8	0.0	0.0	4.8	0.0	0.0	-18.4
147	425307.93	5409669.75	264.69	0	DEN	63	62.8	22.1	0.0	0.0	0.0	81.8	0.4	-5.8	0.0	0.0	4.8	0.0	0.0	3.7
147	425307.93	5409669.75	264.69	0	DEN	125	76.1	22.1	0.0	0.0	0.0	81.8	1.4	1.9	0.0	0.0	2.9	0.0	0.0	10.2
147	425307.93	5409669.75	264.69	0	DEN	250	70.3	22.1	0.0	0.0	0.0	81.8	3.6	-0.5	0.0	0.0	4.9	0.0	0.0	2.7
147	425307.93	5409669.75	264.69	0	DEN	500	70.2	22.1	0.0	0.0	0.0	81.8	6.7	-1.9	0.0	0.0	4.9	0.0	0.0	0.8
147	425307.93	5409669.75	264.69	0	DEN	1000	67.3	22.1	0.0	0.0	0.0	81.8	12.7	-1.9	0.0	0.0	5.1	0.0	0.0	-8.2
147	425307.93	5409669.75	264.69	0	DEN	2000	63.6	22.1	0.0	0.0	0.0	81.8	33.5	-1.9	0.0	0.0	5.4	0.0	0.0	-33.0
147	425307.93	5409669.75	264.69	0	DEN	4000	59.2	22.1	0.0	0.0	0.0	81.8	113.4	-1.9	0.0	0.0	6.0	0.0	0.0	-118.0
147	425307.93	5409669.75	264.69	0	DEN	8000	53.4	22.1	0.0	0.0	0.0	81.8	404.6	-1.9	0.0	0.0	6.9	0.0	0.0	-415.9
148	425373.63	5409676.11	281.78	0	DEN	32	40.4	21.8	0.0	0.0	0.0	81.7	0.1	-5.8	0.0	0.0	19.8	0.0	0.0	-33.6
148	425373.63	5409676.11	281.78	0	DEN	63	62.8	21.8	0.0	0.0	0.0	81.7	0.4	-5.8	0.0	0.0	23.6	0.0	0.0	-15.3
148	425373.63	5409676.11	281.78	0	DEN	125	76.1	21.8	0.0	0.0	0.0	81.7	1.4	1.9	0.0	0.0	23.1	0.0	0.0	-10.1
148	425373.63	5409676.11	281.78	0	DEN	250	70.3	21.8	0.0	0.0	0.0	81.7	3.6	-0.5	0.0	0.0	25.0	0.0	0.0	-17.6
148	425373.63	5409676.11	281.78	0	DEN	500	70.2	21.8	0.0	0.0	0.0	81.7	6.6	-1.9	0.0	0.0	25.0	0.0	0.0	-19.3
148	425373.63	5409676.11	281.78	0	DEN	1000	67.3	21.8	0.0	0.0	0.0	81.7	12.5	-1.9	0.0	0.0	25.0	0.0	0.0	-28.1
148	425373.63	5409676.11	281.78	0	DEN	2000	63.6	21.8	0.0	0.0	0.0	81.7	33.1	-1.9	0.0	0.0	25.0	0.0	0.0	-52.4
148	425373.63	5409676.11	281.78	0	DEN	4000	59.2	21.8	0.0	0.0	0.0	81.7	112.3	-1.9	0.0	0.0	25.0	0.0	0.0	-136.0
148	425373.63	5409676.11	281.78	0	DEN	8000	53.4	21.8	0.0	0.0	0.0	81.7	400.5	-1.9	0.0	0.0	25.0	0.0	0.0	-430.0
159	425413.90	5409600.87	235.41	0	DEN	32	40.4	20.9	0.0	0.0	0.0	81.5	0.1	-5.8	0.0	0.0	23.3	0.0	0.0	-37.8
159	425413.90	5409600.87	235.41	0	DEN	63	62.8	20.9	0.0	0.0	0.0	81.5	0.4	-5.8	0.0	0.0	25.0	0.0	0.0	-17.4
159	425413.90	5409600.87	235.41	0	DEN	125	76.1	20.9	0.0	0.0	0.0	81.5	1.4	2.0	0.0	0.0	23.0	0.0	0.0	-10.9
159	425413.90	5409600.87	235.41	0	DEN	250	70.3	20.9	0.0	0.0	0.0	81.5	3.5	-0.4	0.0	0.0	25.0	0.0	0.0	-18.3
159	425413.90	5409600.87	235.41	0	DEN	500	70.2	20.9	0.0	0.0	0.0	81.5	6.4	-1.8	0.0	0.0	25.0	0.0	0.0	-20.0
159	425413.90	5409600.87	235.41	0	DEN	1000	67.3	20.9	0.0	0.0	0.0	81.5	12.2	-1.8	0.0	0.0	25.0	0.0	0.0	-28.7
159	425413.90	5409600.87	235.41	0	DEN	2000	63.6	20.9	0.0	0.0	0.0	81.5	32.3	-1.8	0.0	0.0	25.0	0.0	0.0	-52.4
159	425413.90	5409600.87	235.41	0	DEN	4000	59.2	20.9	0.0	0.0	0.0	81.5	109.6	-1.8	0.0	0.0	25.0	0.0	0.0	-134.1
159	425413.90	5409600.87	235.41	0	DEN	8000	53.4	20.9	0.0	0.0	0.0	81.5	390.8	-1.8	0.0	0.0	25.0	0.0	0.0	-421.1
163	426188.55	5409404.82	352.74	0	DEN	32	40.4	19.1	0.0	0.0	0.0	79.8	0.1	-5.7	0.0	0.0	4.8	0.0	0.0	-19.4
163	426188.55	5409404.82	352.74	0	DEN	63	62.8	19.1	0.0	0.0	0.0	79.8	0.3	-5.7	0.0	0.0	4.8	0.0	0.0	2.7
163	426188.55	5409404.82	352.74	0	DEN	125	76.1	19.1	0.0	0.0	0.0	79.8	1.1	2.2	0.0	0.0	2.6	0.0	0.0	9.5
163	426188.55	5409404.82	352.74	0	DEN	250	70.3	19.1	0.0	0.0	0.0	79.8	2.9	-0.3	0.0	0.0	4.8	0.0	0.0	2.2
163	426188.55	5409404.82	352.74	0	DEN	500	70.2	19.1	0.0	0.0	0.0	79.8	5.3	-1.7	0.0	0.0	4.9	0.0	0.0	1.0
163	426188.55	5409404.82	352.74	0	DEN	1000	67.3	19.1	0.0	0.0	0.0	79.8	10.1	-1.7	0.0	0.0	5.0	0.0	0.0	-6.8
163	426188.55	5409404.82	352.74	0	DEN	2000	63.6	19.1	0.0	0.0	0.0	79.8	26.7	-1.7	0.0	0.0	5.2	0.0	0.0	-27.2
163	426188.55	5409404.82	352.74	0	DEN	4000	59.2	19.1	0.0	0.0	0.0	79.8	90.4	-1.7	0.0	0.0	5.5	0.0	0.0	-95.7
163	426188.55	5409404.82	352.74	0	DEN	8000	53.4	19.1	0.0	0.0	0.0	79.8	322.4	-1.7	0.0	0.0	6.1	0.0	0.0	-334.1
179	425425.56	5409721.68	359.01	0	DEN	32	40.4	19.8	0.0	0.0	0.0	81.7	0.1	-5.8	0.0	0.0	4.8	0.0	0.0	-20.6
179	425425.56	5409721.68	359.01	0	DEN	63	62.8	19.8	0.0	0.0	0.0	81.7	0.4	-5.8	0.0	0.0	4.8	0.0	0.0	1.5
179	425425.56	5409721.68	359.01	0	DEN	125	76.1	19.8	0.0	0.0	0.0	81.7	1.4	1.9	0.0	0.0	2.9	0.0	0.0	8.0
179	425425.56	5409721.68	359.01	0	DEN	250	70.3	19.8	0.0	0.0	0.0	81.7	3.6	-0.6	0.0	0.0	4.8	0.0	0.0	0.6
179	425425.56	5409721.68	359.01	0	DEN	500	70.2	19.8	0.0	0.0	0.0	81.7	6.6	-2.0	0.0	0.0	4.8	0.0	0.0	-1.1
179	425425.56	5409721.68	359.01	0	DEN	1000	67.3	19.8	0.0	0.0	0.0	81.7	12.5	-2.0	0.0	0.0	4.8	0.0	0.0	-9.9
179	425425.56	5409721.68	359.01	0	DEN	2000	63.6	19.8	0.0	0.0	0.0	81.7	33.2	-2.0	0.0	0.0	4.8	0.0	0.0	-34.3
179	425425.56	5409721.68	359.01	0	DEN	4000	59.2	19.8	0.0	0.0	0.0	81.7	112.4	-2.0	0.0	0.0	4.8	0.0	0.0	-117.9
179	425425.56	5409721.68	359.01	0	DEN	8000	53.4	19.8	0.0	0.0	0.0	81.7	401.0	-2.0	0.0	0.0	4.8	0.0	0.0	-412.3
216	425330.18	5409769.36	259.98	0	DEN	32	40.4	18.0	0.0	0.0	0.0	81.9	0.1	-5.8	0.0	0.0	16.6	0.0	0.0	-34.5
216	425330.18	5409769.36	259.98	0	DEN	63	62.8	18.0	0.0	0.0	0.0	81.9	0.4	-5.8	0.0	0.0	20.0	0.0	0.0	-15.8
216	425330.18	5409769.36	259.98	0	DEN	125	76.1	18.0	0.0	0.0	0.0	81.9	1.4	1.8	0.0	0.0	21.2	0.0	0.0	-12.3
216	425330.18	5409769.36	259.98	0	DEN	250	70.3	18.0	0.0	0.0	0.0	81.9	3.7	-0.6	0.0	0.0	25.0	0.0	0.0	-21.7
216	425330.18	5409769.36	259.98	0	DEN	500	70.2	18.0	0.0	0.0	0.0	81.9	6.8	-2.0	0.0	0.0	25.0	0.0	0.0	-23.5
216	425330.18	5409769.36	259.98	0	DEN	1000	67.3	18.0	0.0	0.0	0.0	81.9	12.9	-2.0	0.0	0.0	25.0	0.0	0.0	-32.5
216	425330.18	5409769.36	259.98	0	DEN	2000	63.6	18.0	0.0	0.0	0.0	81.9	34.1	-2.0	0.0	0.0	25.0	0.0	0.0	-57.4
216	425330.18	5409769.36	259.98	0	DEN	4000	59.2	18.0	0.0	0.0	0.0	81.9	115.6	-2.0	0.0	0.0	25.0	0.0	0.0	-143.3
216	425330.18	5409769.36	259.98	0	DEN	8000	53.4	18.0	0.0	0.0	0.0	81.9	412.3	-2.0	0.0	0.0	25.0	0.0	0.0	-445.8

vert. Area Source, ISO 9613, Name: "MB_W-N", ID: ""																					
Nr.	X	Y	Z	Refl.	DEN	Freq.	Lw	l/a	Optime	K0	Dc	Adiv	Aatm	Agr	Afol	Ahous	Abar	Cmet	RL	Lr
	(m)	(m)	(m)			(Hz)	dB(A)	dB	dB	(dB)	(dB)	(dB)	(dB)	(dB)	(dB)	(dB)	(dB)	(dB)	(dB)	dB(A)
282	426611.67	5411104.87	385.50	0	DEN	63	52.0	14.7	0.0	3.0	0.0	83.5	0.5	-5.6	0.0	0.0	4.8	0.0	0.0	-13.6
282	426611.67	5411104.87	385.50	0	DEN	125	63.8	14.7	0.0	3.0	0.0	83.5	1.7	1.2	0.0	0.0	3.6	0.0	0.0	-8.6
282	426611.67	5411104.87	385.50	0	DEN	250	68.5	14.7	0.0	3.0	0.0	83.5	4.4	-1.3	0.0	0.0	4.8	0.0	0.0	-5.3
282	426611.67	5411104.87	385.50	0	DEN	500	72.3	14.7	0.0	3.0	0.0	83.5	8.2	-2.6	0.0	0.0	4.8	0.0	0.0	-3.8

vert. Area Source, ISO 9613, Name: "MB_W-N", ID: ""																					
Nr.	X	Y	Z	Refl.	DEN	Freq.	Lw	l/a	Optime	K0	Dc	Adiv	Aatm	Agr	Afol	Ahous	Abar	Cmet	RL	Lr
	(m)	(m)	(m)			(Hz)	dB(A)	dB	dB	(dB)	(dB)	(dB)	(dB)	(dB)	(dB)	(dB)	(dB)	(dB)	(dB)	dB(A)
282	426611.67	5411104.87	385.50	0	DEN	1000	73.2	14.7	0.0	3.0	0.0	83.5	15.5	-2.6	0.0	0.0	4.8	0.0	0.0	-10.3
282	426611.67	5411104.87	385.50	0	DEN	2000	71.5	14.7	0.0	3.0	0.0	83.5	40.9	-2.6	0.0	0.0	4.8	0.0	0.0	-37.4
282	426611.67	5411104.87	385.50	0	DEN	4000	70.4	14.7	0.0	3.0	0.0	83.5	138.8	-2.6	0.0	0.0	4.8	0.0	0.0	-136.4
282	426611.67	5411104.87	385.50	0	DEN	8000	67.4	14.7	0.0	3.0	0.0	83.5	495.2	-2.6	0.0	0.0	4.8	0.0	0.0	-495.8
283	426611.67	5411104.87	386.50	0	DEN	63	52.0	14.7	0.0	3.0	0.0	83.5	0.5	-5.5	0.0	0.0	4.8	0.0	0.0	-13.6
283	426611.67	5411104.87	386.50	0	DEN	125	63.8	14.7	0.0	3.0	0.0	83.5	1.7	1.2	0.0	0.0	3.6	0.0	0.0	-8.6
283	426611.67	5411104.87	386.50	0	DEN	250	68.5	14.7	0.0	3.0	0.0	83.5	4.4	-1.2	0.0	0.0	4.8	0.0	0.0	-5.3
283	426611.67	5411104.87	386.50	0	DEN	500	72.3	14.7	0.0	3.0	0.0	83.5	8.2	-2.6	0.0	0.0	4.8	0.0	0.0	-3.9
283	426611.67	5411104.87	386.50	0	DEN	1000	73.2	14.7	0.0	3.0	0.0	83.5	15.5	-2.6	0.0	0.0	4.8	0.0	0.0	-10.3
283	426611.67	5411104.87	386.50	0	DEN	2000	71.5	14.7	0.0	3.0	0.0	83.5	40.9	-2.6	0.0	0.0	4.8	0.0	0.0	-37.4
283	426611.67	5411104.87	386.50	0	DEN	4000	70.4	14.7	0.0	3.0	0.0	83.5	138.8	-2.6	0.0	0.0	4.8	0.0	0.0	-136.4
283	426611.67	5411104.87	386.50	0	DEN	8000	67.4	14.7	0.0	3.0	0.0	83.5	495.2	-2.6	0.0	0.0	4.8	0.0	0.0	-495.8
284	426611.67	5411104.87	372.50	0	DEN	63	52.0	14.7	0.0	3.0	0.0	83.5	0.5	-5.8	0.0	0.0	4.8	0.0	0.0	-13.3
284	426611.67	5411104.87	372.50	0	DEN	125	63.8	14.7	0.0	3.0	0.0	83.5	1.7	1.0	0.0	0.0	3.8	0.0	0.0	-8.6
284	426611.67	5411104.87	372.50	0	DEN	250	68.5	14.7	0.0	3.0	0.0	83.5	4.4	-1.5	0.0	0.0	4.8	0.0	0.0	-5.0
284	426611.67	5411104.87	372.50	0	DEN	500	72.3	14.7	0.0	3.0	0.0	83.5	8.2	-2.9	0.0	0.0	4.8	0.0	0.0	-3.6
284	426611.67	5411104.87	372.50	0	DEN	1000	73.2	14.7	0.0	3.0	0.0	83.5	15.5	-2.9	0.0	0.0	4.8	0.0	0.0	-10.0
284	426611.67	5411104.87	372.50	0	DEN	2000	71.5	14.7	0.0	3.0	0.0	83.5	40.9	-2.9	0.0	0.0	4.8	0.0	0.0	-37.2
284	426611.67	5411104.87	372.50	0	DEN	4000	70.4	14.7	0.0	3.0	0.0	83.5	138.8	-2.9	0.0	0.0	4.8	0.0	0.0	-136.1
284	426611.67	5411104.87	372.50	0	DEN	8000	67.4	14.7	0.0	3.0	0.0	83.5	495.2	-2.9	0.0	0.0	4.8	0.0	0.0	-495.5
285	426611.67	5411104.87	373.50	0	DEN	63	52.0	14.7	0.0	3.0	0.0	83.5	0.5	-5.8	0.0	0.0	4.8	0.0	0.0	-13.3
285	426611.67	5411104.87	373.50	0	DEN	125	63.8	14.7	0.0	3.0	0.0	83.5	1.7	0.9	0.0	0.0	3.8	0.0	0.0	-8.6
285	426611.67	5411104.87	373.50	0	DEN	250	68.5	14.7	0.0	3.0	0.0	83.5	4.4	-1.5	0.0	0.0	4.8	0.0	0.0	-5.0
285	426611.67	5411104.87	373.50	0	DEN	500	72.3	14.7	0.0	3.0	0.0	83.5	8.2	-2.9	0.0	0.0	4.8	0.0	0.0	-3.6
285	426611.67	5411104.87	373.50	0	DEN	1000	73.2	14.7	0.0	3.0	0.0	83.5	15.5	-2.9	0.0	0.0	4.8	0.0	0.0	-10.0
285	426611.67	5411104.87	373.50	0	DEN	2000	71.5	14.7	0.0	3.0	0.0	83.5	40.9	-2.9	0.0	0.0	4.8	0.0	0.0	-37.2
285	426611.67	5411104.87	373.50	0	DEN	4000	70.4	14.7	0.0	3.0	0.0	83.5	138.8	-2.9	0.0	0.0	4.8	0.0	0.0	-136.2
285	426611.67	5411104.87	373.50	0	DEN	8000	67.4	14.7	0.0	3.0	0.0	83.5	495.2	-2.9	0.0	0.0	4.8	0.0	0.0	-495.5
286	426611.67	5411104.87	388.50	0	DEN	63	52.0	14.7	0.0	3.0	0.0	83.5	0.5	-5.5	0.0	0.0	4.8	0.0	0.0	-13.6
286	426611.67	5411104.87	388.50	0	DEN	125	63.8	14.7	0.0	3.0	0.0	83.5	1.7	1.2	0.0	0.0	3.5	0.0	0.0	-8.6
286	426611.67	5411104.87	388.50	0	DEN	250	68.5	14.7	0.0	3.0	0.0	83.5	4.4	-1.2	0.0	0.0	4.8	0.0	0.0	-5.3
286	426611.67	5411104.87	388.50	0	DEN	500	72.3	14.7	0.0	3.0	0.0	83.5	8.2	-2.6	0.0	0.0	4.8	0.0	0.0	-3.9
286	426611.67	5411104.87	388.50	0	DEN	1000	73.2	14.7	0.0	3.0	0.0	83.5	15.5	-2.6	0.0	0.0	4.8	0.0	0.0	-10.3
286	426611.67	5411104.87	388.50	0	DEN	2000	71.5	14.7	0.0	3.0	0.0	83.5	40.9	-2.6	0.0	0.0	4.8	0.0	0.0	-37.5
286	426611.67	5411104.87	388.50	0	DEN	4000	70.4	14.7	0.0	3.0	0.0	83.5	138.8	-2.6	0.0	0.0	4.8	0.0	0.0	-136.5
286	426611.67	5411104.87	388.50	0	DEN	8000	67.4	14.7	0.0	3.0	0.0	83.5	495.2	-2.6	0.0	0.0	4.8	0.0	0.0	-495.8
287	426611.67	5411104.87	387.50	0	DEN	63	52.0	14.7	0.0	3.0	0.0	83.5	0.5	-5.5	0.0	0.0	4.8	0.0	0.0	-13.6
287	426611.67	5411104.87	387.50	0	DEN	125	63.8	14.7	0.0	3.0	0.0	83.5	1.7	1.2	0.0	0.0	3.5	0.0	0.0	-8.6
287	426611.67	5411104.87	387.50	0	DEN	250	68.5	14.7	0.0	3.0	0.0	83.5	4.4	-1.2	0.0	0.0	4.8	0.0	0.0	-5.3
287	426611.67	5411104.87	387.50	0	DEN	500	72.3	14.7	0.0	3.0	0.0	83.5	8.2	-2.6	0.0	0.0	4.8	0.0	0.0	-3.9
287	426611.67	5411104.87	387.50	0	DEN	1000	73.2	14.7	0.0	3.0	0.0	83.5	15.5	-2.6	0.0	0.0	4.8	0.0	0.0	-10.3
287	426611.67	5411104.87	387.50	0	DEN	2000	71.5	14.7	0.0	3.0	0.0	83.5	40.9	-2.6	0.0	0.0	4.8	0.0	0.0	-37.5
287	426611.67	5411104.87	387.50	0	DEN	4000	70.4	14.7	0.0	3.0	0.0	83.5	138.8	-2.6	0.0	0.0	4.8	0.0	0.0	-136.5
287	426611.67	5411104.87	387.50	0	DEN	8000	67.4	14.7	0.0	3.0	0.0	83.5	495.2	-2.6	0.0	0.0	4.8	0.0	0.0	-495.8
288	426611.67	5411104.87	377.50	0	DEN	63	52.0	14.7	0.0	3.0	0.0	83.5	0.5	-5.7	0.0	0.0	4.8	0.0	0.0	-13.4
288	426611.67	5411104.87	377.50	0	DEN	125	63.8	14.7	0.0	3.0	0.0	83.5	1.7	1.0	0.0	0.0	3.8	0.0	0.0	-8.6
288	426611.67	5411104.87	377.50	0	DEN	250	68.5	14.7	0.0	3.0	0.0	83.5	4.4	-1.4	0.0	0.0	4.8	0.0	0.0	-5.1
288	426611.67	5411104.87	377.50	0	DEN	500	72.3	14.7	0.0	3.0	0.0	83.5	8.2	-2.8	0.0	0.0	4.8	0.0	0.0	-3.7
288	426611.67	5411104.87	377.50	0	DEN	1000	73.2	14.7	0.0	3.0	0.0	83.5	15.5	-2.8	0.0	0.0	4.8	0.0	0.0	-10.1
288	426611.67	5411104.87	377.50	0	DEN	2000	71.5	14.7	0.0	3.0	0.0	83.5	40.9	-2.8	0.0	0.0	4.8	0.0	0.0	-37.2
288	426611.67	5411104.87	377.50	0	DEN	4000	70.4	14.7	0.0	3.0	0.0	83.5	138.8	-2.8	0.0	0.0	4.8	0.0	0.0	-136.2
288	426611.67	5411104.87	377.50	0	DEN	8000	67.4	14.7	0.0	3.0	0.0	83.5	495.2	-2.8	0.0	0.0	4.8	0.0	0.0	-495.6
289	426611.67	5411104.87	374.50	0	DEN	63	52.0	14.7	0.0	3.0	0.0	83.5	0.5	-5.8	0.0	0.0	4.8	0.0	0.0	-13.4
289	426611.67	5411104.87	374.50	0	DEN	125	63.8	14.7	0.0	3.0	0.0	83.5	1.7	1.0	0.0	0.0	3.8	0.0	0.0	-8.6
289	426611.67	5411104.87	374.50	0	DEN	250	68.5	14.7	0.0	3.0	0.0	83.5	4.4	-1.5	0.0	0.0	4.8	0.0	0.0	-5.1
289	426611.67	5411104.87	374.50	0	DEN	500	72.3	14.7	0.0	3.0	0.0	83.5	8.2	-2.9	0.0	0.0	4.8	0.0	0.0	-3.6
289	426611.67	5411104.87	374.50	0	DEN	1000	73.2	14.7	0.0	3.0	0.0	83.5	15.5	-2.9	0.0	0.0	4.8	0.0	0.0	-10.0
289	426611.67	5411104.87	374.50	0	DEN	2000	71.5	14.7	0.0	3.0	0.0	83.5	40.9	-2.9	0.0	0.0	4.8	0.0	0.0	-37.2
289	426611.67	5411104.87	374.50	0	DEN	4000	70.4	14.7	0.0	3.0	0.0	83.5	138.8	-2.9	0.0	0.0	4.8	0.0	0.0	-136.2
289	426611.67	5411104.87	374.50	0	DEN	8000	67.4	14.7	0.0	3.0	0.0	83.5	495.2	-2.9	0.0	0.0	4.8	0.0	0.0	-495.5
290	426611.67	5411104.87	378.50	0	DEN	63	52.0	14.7	0.0	3.0	0.0	83.5	0.5	-5.7	0.0	0.0	4.8	0.0	0.0	-13.4
290	426611.67	5411104.87	378.50	0	DEN	125	63.8	14.7	0.0	3.0	0.0	83.5	1.7	1.0	0.0	0.0	3.7	0.0	0.0	-8.6
290	426611.67	5411104.87	378.50	0	DEN	250	68.5	14.7	0.0	3.0	0.0	83.5	4.4	-1.4	0.0	0.0	4.8	0.0	0.0	-5.1

vert. Area Source, ISO 9613, Name: "MB_W-N", ID: ""																					
Nr.	X	Y	Z	Refl.	DEN	Freq.	Lw	l/a	Optime	K0	Dc	Adiv	Aatm	Agr	Afol	Ahous	Abar	Cmet	RL	Lr
	(m)	(m)	(m)			(Hz)	dB(A)	dB	dB	(dB)	(dB)	(dB)	(dB)	(dB)	(dB)	(dB)	(dB)	(dB)	(dB)	dB(A)
290	426611.67	5411104.87	378.50	0	DEN	500	72.3	14.7	0.0	3.0	0.0	83.5	8.2	-2.8	0.0	0.0	4.8	0.0	0.0	-3.7
290	426611.67	5411104.87	378.50	0	DEN	1000	73.2	14.7	0.0	3.0	0.0	83.5	15.5	-2.8	0.0	0.0	4.8	0.0	0.0	-10.1
290	426611.67	5411104.87	378.50	0	DEN	2000	71.5	14.7	0.0	3.0	0.0	83.5	40.9	-2.8	0.0	0.0	4.8	0.0	0.0	-37.3
290	426611.67	5411104.87	378.50	0	DEN	4000	70.4	14.7	0.0	3.0	0.0	83.5	138.8	-2.8	0.0	0.0	4.8	0.0	0.0	-136.3
290	426611.67	5411104.87	378.50	0	DEN	8000	67.4	14.7	0.0	3.0	0.0	83.5	495.2	-2.8	0.0	0.0	4.8	0.0	0.0	-495.6
291	426611.67	5411104.87	371.50	0	DEN	63	52.0	14.7	0.0	3.0	0.0	83.5	0.5	-5.9	0.0	0.0	4.8	0.0	0.0	-13.3
291	426611.67	5411104.87	371.50	0	DEN	125	63.8	14.7	0.0	3.0	0.0	83.5	1.7	1.0	0.0	0.0	3.8	0.0	0.0	-8.6
291	426611.67	5411104.87	371.50	0	DEN	250	68.5	14.7	0.0	3.0	0.0	83.5	4.4	-1.4	0.0	0.0	4.8	0.0	0.0	-5.1
291	426611.67	5411104.87	371.50	0	DEN	500	72.3	14.7	0.0	3.0	0.0	83.5	8.2	-2.9	0.0	0.0	4.8	0.0	0.0	-3.6
291	426611.67	5411104.87	371.50	0	DEN	1000	73.2	14.7	0.0	3.0	0.0	83.5	15.5	-2.9	0.0	0.0	4.8	0.0	0.0	-10.0
291	426611.67	5411104.87	371.50	0	DEN	2000	71.5	14.7	0.0	3.0	0.0	83.5	40.9	-2.9	0.0	0.0	4.8	0.0	0.0	-37.1
291	426611.67	5411104.87	371.50	0	DEN	4000	70.4	14.7	0.0	3.0	0.0	83.5	138.8	-2.9	0.0	0.0	4.8	0.0	0.0	-136.1
291	426611.67	5411104.87	371.50	0	DEN	8000	67.4	14.7	0.0	3.0	0.0	83.5	495.2	-2.9	0.0	0.0	4.8	0.0	0.0	-495.5
292	426611.67	5411104.87	370.50	0	DEN	63	52.0	14.7	0.0	3.0	0.0	83.5	0.5	-5.9	0.0	0.0	4.8	0.0	0.0	-13.3
292	426611.67	5411104.87	370.50	0	DEN	125	63.8	14.7	0.0	3.0	0.0	83.5	1.7	0.9	0.0	0.0	3.9	0.0	0.0	-8.6
292	426611.67	5411104.87	370.50	0	DEN	250	68.5	14.7	0.0	3.0	0.0	83.5	4.4	-1.6	0.0	0.0	4.8	0.0	0.0	-5.0
292	426611.67	5411104.87	370.50	0	DEN	500	72.3	14.7	0.0	3.0	0.0	83.5	8.2	-3.0	0.0	0.0	4.8	0.0	0.0	-3.5
292	426611.67	5411104.87	370.50	0	DEN	1000	73.2	14.7	0.0	3.0	0.0	83.5	15.5	-3.0	0.0	0.0	4.8	0.0	0.0	-10.0
292	426611.67	5411104.87	370.50	0	DEN	2000	71.5	14.7	0.0	3.0	0.0	83.5	40.9	-3.0	0.0	0.0	4.8	0.0	0.0	-37.1
292	426611.67	5411104.87	370.50	0	DEN	4000	70.4	14.7	0.0	3.0	0.0	83.5	138.8	-3.0	0.0	0.0	4.8	0.0	0.0	-136.1
292	426611.67	5411104.87	370.50	0	DEN	8000	67.4	14.7	0.0	3.0	0.0	83.5	495.2	-3.0	0.0	0.0	4.8	0.0	0.0	-495.4
293	426611.67	5411104.87	369.50	0	DEN	63	52.0	14.7	0.0	3.0	0.0	83.5	0.5	-5.9	0.0	0.0	4.8	0.0	0.0	-13.2
293	426611.67	5411104.87	369.50	0	DEN	125	63.8	14.7	0.0	3.0	0.0	83.5	1.7	1.2	0.0	0.0	3.6	0.0	0.0	-8.6
293	426611.67	5411104.87	369.50	0	DEN	250	68.5	14.7	0.0	3.0	0.0	83.5	4.4	-1.1	0.0	0.0	4.8	0.0	0.0	-5.4
293	426611.67	5411104.87	369.50	0	DEN	500	72.3	14.7	0.0	3.0	0.0	83.5	8.2	-2.3	0.0	0.0	4.8	0.0	0.0	-4.2
293	426611.67	5411104.87	369.50	0	DEN	1000	73.2	14.7	0.0	3.0	0.0	83.5	15.5	-2.7	0.0	0.0	4.8	0.0	0.0	-10.2
293	426611.67	5411104.87	369.50	0	DEN	2000	71.5	14.7	0.0	3.0	0.0	83.5	40.9	-2.9	0.0	0.0	4.8	0.0	0.0	-37.1
293	426611.67	5411104.87	369.50	0	DEN	4000	70.4	14.7	0.0	3.0	0.0	83.5	138.8	-2.9	0.0	0.0	4.8	0.0	0.0	-136.1
293	426611.67	5411104.87	369.50	0	DEN	8000	67.4	14.7	0.0	3.0	0.0	83.5	495.2	-2.9	0.0	0.0	4.8	0.0	0.0	-495.5
294	426611.67	5411104.87	375.50	0	DEN	63	52.0	14.7	0.0	3.0	0.0	83.5	0.5	-5.8	0.0	0.0	4.8	0.0	0.0	-13.4
294	426611.67	5411104.87	375.50	0	DEN	125	63.8	14.7	0.0	3.0	0.0	83.5	1.7	1.0	0.0	0.0	3.8	0.0	0.0	-8.6
294	426611.67	5411104.87	375.50	0	DEN	250	68.5	14.7	0.0	3.0	0.0	83.5	4.4	-1.5	0.0	0.0	4.8	0.0	0.0	-5.1
294	426611.67	5411104.87	375.50	0	DEN	500	72.3	14.7	0.0	3.0	0.0	83.5	8.2	-2.9	0.0	0.0	4.8	0.0	0.0	-3.6
294	426611.67	5411104.87	375.50	0	DEN	1000	73.2	14.7	0.0	3.0	0.0	83.5	15.5	-2.9	0.0	0.0	4.8	0.0	0.0	-10.1
294	426611.67	5411104.87	375.50	0	DEN	2000	71.5	14.7	0.0	3.0	0.0	83.5	40.9	-2.9	0.0	0.0	4.8	0.0	0.0	-37.2
294	426611.67	5411104.87	375.50	0	DEN	4000	70.4	14.7	0.0	3.0	0.0	83.5	138.8	-2.9	0.0	0.0	4.8	0.0	0.0	-136.2
294	426611.67	5411104.87	375.50	0	DEN	8000	67.4	14.7	0.0	3.0	0.0	83.5	495.2	-2.9	0.0	0.0	4.8	0.0	0.0	-495.6
295	426611.67	5411104.87	379.50	0	DEN	63	52.0	14.7	0.0	3.0	0.0	83.5	0.5	-5.7	0.0	0.0	4.8	0.0	0.0	-13.5
295	426611.67	5411104.87	379.50	0	DEN	125	63.8	14.7	0.0	3.0	0.0	83.5	1.7	1.1	0.0	0.0	3.7	0.0	0.0	-8.6
295	426611.67	5411104.87	379.50	0	DEN	250	68.5	14.7	0.0	3.0	0.0	83.5	4.4	-1.4	0.0	0.0	4.8	0.0	0.0	-5.2
295	426611.67	5411104.87	379.50	0	DEN	500	72.3	14.7	0.0	3.0	0.0	83.5	8.2	-2.8	0.0	0.0	4.8	0.0	0.0	-3.7
295	426611.67	5411104.87	379.50	0	DEN	1000	73.2	14.7	0.0	3.0	0.0	83.5	15.5	-2.8	0.0	0.0	4.8	0.0	0.0	-10.1
295	426611.67	5411104.87	379.50	0	DEN	2000	71.5	14.7	0.0	3.0	0.0	83.5	40.9	-2.8	0.0	0.0	4.8	0.0	0.0	-37.3
295	426611.67	5411104.87	379.50	0	DEN	4000	70.4	14.7	0.0	3.0	0.0	83.5	138.8	-2.8	0.0	0.0	4.8	0.0	0.0	-136.3
295	426611.67	5411104.87	379.50	0	DEN	8000	67.4	14.7	0.0	3.0	0.0	83.5	495.2	-2.8	0.0	0.0	4.8	0.0	0.0	-495.6
296	426611.67	5411104.87	384.50	0	DEN	63	52.0	14.7	0.0	3.0	0.0	83.5	0.5	-5.6	0.0	0.0	4.8	0.0	0.0	-13.6
296	426611.67	5411104.87	384.50	0	DEN	125	63.8	14.7	0.0	3.0	0.0	83.5	1.7	1.2	0.0	0.0	3.6	0.0	0.0	-8.6
296	426611.67	5411104.87	384.50	0	DEN	250	68.5	14.7	0.0	3.0	0.0	83.5	4.4	-1.3	0.0	0.0	4.8	0.0	0.0	-5.3
296	426611.67	5411104.87	384.50	0	DEN	500	72.3	14.7	0.0	3.0	0.0	83.5	8.2	-2.7	0.0	0.0	4.8	0.0	0.0	-3.8
296	426611.67	5411104.87	384.50	0	DEN	1000	73.2	14.7	0.0	3.0	0.0	83.5	15.5	-2.7	0.0	0.0	4.8	0.0	0.0	-10.3
296	426611.67	5411104.87	384.50	0	DEN	2000	71.5	14.7	0.0	3.0	0.0	83.5	40.9	-2.7	0.0	0.0	4.8	0.0	0.0	-37.4
296	426611.67	5411104.87	384.50	0	DEN	4000	70.4	14.7	0.0	3.0	0.0	83.5	138.8	-2.7	0.0	0.0	4.8	0.0	0.0	-136.4
296	426611.67	5411104.87	384.50	0	DEN	8000	67.4	14.7	0.0	3.0	0.0	83.5	495.2	-2.7	0.0	0.0	4.8	0.0	0.0	-495.7
297	426611.67	5411104.87	382.50	0	DEN	63	52.0	14.7	0.0	3.0	0.0	83.5	0.5	-5.6	0.0	0.0	4.8	0.0	0.0	-13.5
297	426611.67	5411104.87	382.50	0	DEN	125	63.8	14.7	0.0	3.0	0.0	83.5	1.7	1.1	0.0	0.0	3.6	0.0	0.0	-8.6
297	426611.67	5411104.87	382.50	0	DEN	250	68.5	14.7	0.0	3.0	0.0	83.5	4.4	-1.3	0.0	0.0	4.8	0.0	0.0	-5.2
297	426611.67	5411104.87	382.50	0	DEN	500	72.3	14.7	0.0	3.0	0.0	83.5	8.2	-2.7	0.0	0.0	4.8	0.0	0.0	-3.8
297	426611.67	5411104.87	382.50	0	DEN	1000	73.2	14.7	0.0	3.0	0.0	83.5	15.5	-2.7	0.0	0.0	4.8	0.0	0.0	-10.2
297	426611.67	5411104.87	382.50	0	DEN	2000	71.5	14.7	0.0	3.0	0.0	83.5	40.9	-2.7	0.0	0.0	4.8	0.0	0.0	-37.4
297	426611.67	5411104.87	382.50	0	DEN	4000	70.4	14.7	0.0	3.0	0.0	83.5	138.8	-2.7	0.0	0.0	4.8	0.0	0.0	-136.3
297	426611.67	5411104.87	382.50	0	DEN	8000	67.4	14.7	0.0	3.0	0.0	83.5	495.2	-2.7	0.0	0.0	4.8	0.0	0.0	-495.7
298	426611.67	5411104.87	383.50	0	DEN	63	52.0	14.7	0.0	3.0	0.0	83.5	0.5	-5.6	0.0	0.0	4.8	0.0	0.0	-13.5
298	426611.67	5411104.87	383.50	0	DEN	125	63.8	14.7	0.0	3.0	0.0	83.5	1.7	1.1	0.0	0.0	3.6	0.0	0.0	-8.6

vert. Area Source, ISO 9613, Name: "MB_W-N", ID: ""																					
Nr.	X	Y	Z	Refl.	DEN	Freq.	Lw	l/a	Optime	K0	Dc	Adiv	Aatm	Agr	Afol	Ahous	Abar	Cmet	RL	Lr
	(m)	(m)	(m)			(Hz)	dB(A)	dB	dB	(dB)	(dB)	(dB)	(dB)	(dB)	(dB)	(dB)	(dB)	(dB)	(dB)	dB(A)
298	426611.67	5411104.87	383.50	0	DEN	250	68.5	14.7	0.0	3.0	0.0	83.5	4.4	-1.3	0.0	0.0	4.8	0.0	0.0	-5.2
298	426611.67	5411104.87	383.50	0	DEN	500	72.3	14.7	0.0	3.0	0.0	83.5	8.2	-2.7	0.0	0.0	4.8	0.0	0.0	-3.8
298	426611.67	5411104.87	383.50	0	DEN	1000	73.2	14.7	0.0	3.0	0.0	83.5	15.5	-2.7	0.0	0.0	4.8	0.0	0.0	-10.2
298	426611.67	5411104.87	383.50	0	DEN	2000	71.5	14.7	0.0	3.0	0.0	83.5	40.9	-2.7	0.0	0.0	4.8	0.0	0.0	-37.4
298	426611.67	5411104.87	383.50	0	DEN	4000	70.4	14.7	0.0	3.0	0.0	83.5	138.8	-2.7	0.0	0.0	4.8	0.0	0.0	-136.4
298	426611.67	5411104.87	383.50	0	DEN	8000	67.4	14.7	0.0	3.0	0.0	83.5	495.2	-2.7	0.0	0.0	4.8	0.0	0.0	-495.7
299	426611.67	5411104.87	376.50	0	DEN	63	52.0	14.7	0.0	3.0	0.0	83.5	0.5	-5.7	0.0	0.0	4.8	0.0	0.0	-13.4
299	426611.67	5411104.87	376.50	0	DEN	125	63.8	14.7	0.0	3.0	0.0	83.5	1.7	1.0	0.0	0.0	3.8	0.0	0.0	-8.6
299	426611.67	5411104.87	376.50	0	DEN	250	68.5	14.7	0.0	3.0	0.0	83.5	4.4	-1.4	0.0	0.0	4.8	0.0	0.0	-5.1
299	426611.67	5411104.87	376.50	0	DEN	500	72.3	14.7	0.0	3.0	0.0	83.5	8.2	-2.8	0.0	0.0	4.8	0.0	0.0	-3.7
299	426611.67	5411104.87	376.50	0	DEN	1000	73.2	14.7	0.0	3.0	0.0	83.5	15.5	-2.8	0.0	0.0	4.8	0.0	0.0	-10.1
299	426611.67	5411104.87	376.50	0	DEN	2000	71.5	14.7	0.0	3.0	0.0	83.5	40.9	-2.8	0.0	0.0	4.8	0.0	0.0	-37.2
299	426611.67	5411104.87	376.50	0	DEN	4000	70.4	14.7	0.0	3.0	0.0	83.5	138.8	-2.8	0.0	0.0	4.8	0.0	0.0	-136.2
299	426611.67	5411104.87	376.50	0	DEN	8000	67.4	14.7	0.0	3.0	0.0	83.5	495.2	-2.8	0.0	0.0	4.8	0.0	0.0	-495.6
300	426611.67	5411104.87	380.50	0	DEN	63	52.0	14.7	0.0	3.0	0.0	83.5	0.5	-5.7	0.0	0.0	4.8	0.0	0.0	-13.5
300	426611.67	5411104.87	380.50	0	DEN	125	63.8	14.7	0.0	3.0	0.0	83.5	1.7	1.1	0.0	0.0	3.7	0.0	0.0	-8.6
300	426611.67	5411104.87	380.50	0	DEN	250	68.5	14.7	0.0	3.0	0.0	83.5	4.4	-1.4	0.0	0.0	4.8	0.0	0.0	-5.2
300	426611.67	5411104.87	380.50	0	DEN	500	72.3	14.7	0.0	3.0	0.0	83.5	8.2	-2.8	0.0	0.0	4.8	0.0	0.0	-3.7
300	426611.67	5411104.87	380.50	0	DEN	1000	73.2	14.7	0.0	3.0	0.0	83.5	15.5	-2.8	0.0	0.0	4.8	0.0	0.0	-10.2
300	426611.67	5411104.87	380.50	0	DEN	2000	71.5	14.7	0.0	3.0	0.0	83.5	40.9	-2.8	0.0	0.0	4.8	0.0	0.0	-37.3
300	426611.67	5411104.87	380.50	0	DEN	4000	70.4	14.7	0.0	3.0	0.0	83.5	138.8	-2.8	0.0	0.0	4.8	0.0	0.0	-136.3
300	426611.67	5411104.87	380.50	0	DEN	8000	67.4	14.7	0.0	3.0	0.0	83.5	495.2	-2.8	0.0	0.0	4.8	0.0	0.0	-495.7
301	426611.67	5411104.87	381.50	0	DEN	63	52.0	14.7	0.0	3.0	0.0	83.5	0.5	-5.6	0.0	0.0	4.8	0.0	0.0	-13.5
301	426611.67	5411104.87	381.50	0	DEN	125	63.8	14.7	0.0	3.0	0.0	83.5	1.7	1.1	0.0	0.0	3.7	0.0	0.0	-8.6
301	426611.67	5411104.87	381.50	0	DEN	250	68.5	14.7	0.0	3.0	0.0	83.5	4.4	-1.3	0.0	0.0	4.8	0.0	0.0	-5.2
301	426611.67	5411104.87	381.50	0	DEN	500	72.3	14.7	0.0	3.0	0.0	83.5	8.2	-2.7	0.0	0.0	4.8	0.0	0.0	-3.8
301	426611.67	5411104.87	381.50	0	DEN	1000	73.2	14.7	0.0	3.0	0.0	83.5	15.5	-2.7	0.0	0.0	4.8	0.0	0.0	-10.2
301	426611.67	5411104.87	381.50	0	DEN	2000	71.5	14.7	0.0	3.0	0.0	83.5	40.9	-2.7	0.0	0.0	4.8	0.0	0.0	-37.3
301	426611.67	5411104.87	381.50	0	DEN	4000	70.4	14.7	0.0	3.0	0.0	83.5	138.8	-2.7	0.0	0.0	4.8	0.0	0.0	-136.3
301	426611.67	5411104.87	381.50	0	DEN	8000	67.4	14.7	0.0	3.0	0.0	83.5	495.2	-2.7	0.0	0.0	4.8	0.0	0.0	-495.7

Line Source, ISO 9613, Name: "TRL_OP-LGO", ID: ""																					
Nr.	X	Y	Z	Refl.	DEN	Freq.	Lw	l/a	Optime	K0	Dc	Adiv	Aatm	Agr	Afol	Ahous	Abar	Cmet	RL	Lr
	(m)	(m)	(m)			(Hz)	dB(A)	dB	dB	(dB)	(dB)	(dB)	(dB)	(dB)	(dB)	(dB)	(dB)	(dB)	(dB)	dB(A)
114	425807.01	5409407.94	324.36	0	DEN	32	37.4	26.3	0.0	0.0	0.0	80.4	0.1	-5.7	0.0	0.0	4.8	0.0	0.0	-15.8
114	425807.01	5409407.94	324.36	0	DEN	63	59.8	26.3	0.0	0.0	0.0	80.4	0.4	-5.7	0.0	0.0	4.8	0.0	0.0	6.3
114	425807.01	5409407.94	324.36	0	DEN	125	73.1	26.3	0.0	0.0	0.0	80.4	1.2	2.2	0.0	0.0	2.6	0.0	0.0	13.0
114	425807.01	5409407.94	324.36	0	DEN	250	67.3	26.3	0.0	0.0	0.0	80.4	3.1	-0.2	0.0	0.0	4.8	0.0	0.0	5.6
114	425807.01	5409407.94	324.36	0	DEN	500	67.2	26.3	0.0	0.0	0.0	80.4	5.7	-1.6	0.0	0.0	4.8	0.0	0.0	4.2
114	425807.01	5409407.94	324.36	0	DEN	1000	64.3	26.3	0.0	0.0	0.0	80.4	10.8	-1.6	0.0	0.0	4.8	0.0	0.0	-3.8
114	425807.01	5409407.94	324.36	0	DEN	2000	60.6	26.3	0.0	0.0	0.0	80.4	28.6	-1.6	0.0	0.0	4.9	0.0	0.0	-25.3
114	425807.01	5409407.94	324.36	0	DEN	4000	56.2	26.3	0.0	0.0	0.0	80.4	96.8	-1.6	0.0	0.0	5.0	0.0	0.0	-98.1
114	425807.01	5409407.94	324.36	0	DEN	8000	50.4	26.3	0.0	0.0	0.0	80.4	345.4	-1.6	0.0	0.0	5.3	0.0	0.0	-352.7
134	427615.12	5409653.01	392.39	0	DEN	32	37.4	24.0	0.0	0.0	0.0	79.6	0.1	-5.7	0.0	0.0	0.0	0.0	0.0	-12.6
134	427615.12	5409653.01	392.39	0	DEN	63	59.8	24.0	0.0	0.0	0.0	79.6	0.3	-5.7	0.0	0.0	0.0	0.0	0.0	9.6
134	427615.12	5409653.01	392.39	0	DEN	125	73.1	24.0	0.0	0.0	0.0	79.6	1.1	1.4	0.0	0.0	0.0	0.0	0.0	14.9
134	427615.12	5409653.01	392.39	0	DEN	250	67.3	24.0	0.0	0.0	0.0	79.6	2.8	-1.0	0.0	0.0	0.0	0.0	0.0	9.9
134	427615.12	5409653.01	392.39	0	DEN	500	67.2	24.0	0.0	0.0	0.0	79.6	5.2	-2.4	0.0	0.0	0.0	0.0	0.0	8.8
134	427615.12	5409653.01	392.39	0	DEN	1000	64.3	24.0	0.0	0.0	0.0	79.6	9.9	-2.4	0.0	0.0	0.0	0.0	0.0	1.2
134	427615.12	5409653.01	392.39	0	DEN	2000	60.6	24.0	0.0	0.0	0.0	79.6	26.2	-2.4	0.0	0.0	0.0	0.0	0.0	-18.8
134	427615.12	5409653.01	392.39	0	DEN	4000	56.2	24.0	0.0	0.0	0.0	79.6	88.7	-2.4	0.0	0.0	0.0	0.0	0.0	-85.7
134	427615.12	5409653.01	392.39	0	DEN	8000	50.4	24.0	0.0	0.0	0.0	79.6	316.3	-2.4	0.0	0.0	0.0	0.0	0.0	-319.1
140	427128.16	5409763.49	392.48	0	DEN	32	37.4	24.2	0.0	0.0	0.0	80.0	0.1	-5.7	0.0	0.0	0.0	0.0	0.0	-12.8
140	427128.16	5409763.49	392.48	0	DEN	63	59.8	24.2	0.0	0.0	0.0	80.0	0.3	-5.7	0.0	0.0	0.0	0.0	0.0	9.4
140	427128.16	5409763.49	392.48	0	DEN	125	73.1	24.2	0.0	0.0	0.0	80.0	1.2	1.8	0.0	0.0	0.0	0.0	0.0	14.3
140	427128.16	5409763.49	392.48	0	DEN	250	67.3	24.2	0.0	0.0	0.0	80.0	3.0	-0.6	0.0	0.0	0.0	0.0	0.0	9.2
140	427128.16	5409763.49	392.48	0	DEN	500	67.2	24.2	0.0	0.0	0.0	80.0	5.5	-2.0	0.0	0.0	0.0	0.0	0.0	8.0
140	427128.16	5409763.49	392.48	0	DEN	1000	64.3	24.2	0.0	0.0	0.0	80.0	10.4	-2.0	0.0	0.0	0.0	0.0	0.0	0.2
140	427128.16	5409763.49	392.48	0	DEN	2000	60.6	24.2	0.0	0.0	0.0	80.0	27.3	-2.0	0.0	0.0	0.0	0.0	0.0	-20.5
140	427128.16	5409763.49	392.48	0	DEN	4000	56.2	24.2	0.0	0.0	0.0	80.0	92.7	-2.0	0.0	0.0	0.0	0.0	0.0	-90.3
140	427128.16	5409763.49	392.48	0	DEN	8000	50.4	24.2	0.0	0.0	0.0	80.0	330.8	-2.0	0.0	0.0	0.0	0.0	0.0	-334.1
152	427802.60	5409569.61	391.84	0	DEN	32	37.4	22.1	0.0	0.0	0.0	79.4	0.1	-5.7	0.0	0.0	0.0	0.0	0.0	-14.3
152	427802.60	5409569.61	391.84	0	DEN	63	59.8	22.1	0.0	0.0	0.0	79.4	0.3	-5.7	0.0	0.0	0.0	0.0	0.0	7.8

Line Source, ISO 9613, Name: "TRL_OP-LGO", ID: ""																					
Nr.	X	Y	Z	Refl.	DEN	Freq.	Lw	l/a	Optime	K0	Dc	Adiv	Aatm	Agr	Afol	Ahous	Abar	Cmet	RL	Lr
	(m)	(m)	(m)			(Hz)	dB(A)	dB	dB	(dB)	(dB)	(dB)	(dB)	(dB)	(dB)	(dB)	(dB)	(dB)	(dB)	dB(A)
152	427802.60	5409569.61	391.84	0	DEN	125	73.1	22.1	0.0	0.0	0.0	79.4	1.1	2.0	0.0	0.0	0.0	0.0	0.0	12.7
152	427802.60	5409569.61	391.84	0	DEN	250	67.3	22.1	0.0	0.0	0.0	79.4	2.8	-0.5	0.0	0.0	0.0	0.0	0.0	7.6
152	427802.60	5409569.61	391.84	0	DEN	500	67.2	22.1	0.0	0.0	0.0	79.4	5.1	-1.8	0.0	0.0	0.0	0.0	0.0	6.6
152	427802.60	5409569.61	391.84	0	DEN	1000	64.3	22.1	0.0	0.0	0.0	79.4	9.7	-1.8	0.0	0.0	0.0	0.0	0.0	-0.9
152	427802.60	5409569.61	391.84	0	DEN	2000	60.6	22.1	0.0	0.0	0.0	79.4	25.5	-1.8	0.0	0.0	0.0	0.0	0.0	-20.4
152	427802.60	5409569.61	391.84	0	DEN	4000	56.2	22.1	0.0	0.0	0.0	79.4	86.6	-1.8	0.0	0.0	0.0	0.0	0.0	-85.9
152	427802.60	5409569.61	391.84	0	DEN	8000	50.4	22.1	0.0	0.0	0.0	79.4	308.7	-1.8	0.0	0.0	0.0	0.0	0.0	-313.9
153	426424.04	5409599.48	372.10	0	DEN	32	37.4	22.5	0.0	0.0	0.0	80.1	0.1	-5.7	0.0	0.0	4.8	0.0	0.0	-19.2
153	426424.04	5409599.48	372.10	0	DEN	63	59.8	22.5	0.0	0.0	0.0	80.1	0.3	-5.7	0.0	0.0	4.8	0.0	0.0	2.9
153	426424.04	5409599.48	372.10	0	DEN	125	73.1	22.5	0.0	0.0	0.0	80.1	1.2	2.0	0.0	0.0	2.7	0.0	0.0	9.7
153	426424.04	5409599.48	372.10	0	DEN	250	67.3	22.5	0.0	0.0	0.0	80.1	3.0	-0.4	0.0	0.0	4.8	0.0	0.0	2.5
153	426424.04	5409599.48	372.10	0	DEN	500	67.2	22.5	0.0	0.0	0.0	80.1	5.5	-1.8	0.0	0.0	4.8	0.0	0.0	1.2
153	426424.04	5409599.48	372.10	0	DEN	1000	64.3	22.5	0.0	0.0	0.0	80.1	10.4	-1.8	0.0	0.0	4.8	0.0	0.0	-6.6
153	426424.04	5409599.48	372.10	0	DEN	2000	60.6	22.5	0.0	0.0	0.0	80.1	27.4	-1.8	0.0	0.0	4.8	0.0	0.0	-27.3
153	426424.04	5409599.48	372.10	0	DEN	4000	56.2	22.5	0.0	0.0	0.0	80.1	93.0	-1.8	0.0	0.0	4.8	0.0	0.0	-97.3
153	426424.04	5409599.48	372.10	0	DEN	8000	50.4	22.5	0.0	0.0	0.0	80.1	331.9	-1.8	0.0	0.0	4.8	0.0	0.0	-341.9
156	426257.93	5409503.31	362.49	0	DEN	32	37.4	22.4	0.0	0.0	0.0	80.0	0.1	-5.7	0.0	0.0	4.8	0.0	0.0	-19.3
156	426257.93	5409503.31	362.49	0	DEN	63	59.8	22.4	0.0	0.0	0.0	80.0	0.3	-5.7	0.0	0.0	4.8	0.0	0.0	2.8
156	426257.93	5409503.31	362.49	0	DEN	125	73.1	22.4	0.0	0.0	0.0	80.0	1.2	2.3	0.0	0.0	2.5	0.0	0.0	9.6
156	426257.93	5409503.31	362.49	0	DEN	250	67.3	22.4	0.0	0.0	0.0	80.0	2.9	-0.2	0.0	0.0	4.8	0.0	0.0	2.2
156	426257.93	5409503.31	362.49	0	DEN	500	67.2	22.4	0.0	0.0	0.0	80.0	5.4	-1.5	0.0	0.0	4.8	0.0	0.0	1.0
156	426257.93	5409503.31	362.49	0	DEN	1000	64.3	22.4	0.0	0.0	0.0	80.0	10.3	-1.5	0.0	0.0	4.8	0.0	0.0	-6.8
156	426257.93	5409503.31	362.49	0	DEN	2000	60.6	22.4	0.0	0.0	0.0	80.0	27.2	-1.5	0.0	0.0	4.8	0.0	0.0	-27.4
156	426257.93	5409503.31	362.49	0	DEN	4000	56.2	22.4	0.0	0.0	0.0	80.0	92.3	-1.5	0.0	0.0	4.8	0.0	0.0	-96.9
156	426257.93	5409503.31	362.49	0	DEN	8000	50.4	22.4	0.0	0.0	0.0	80.0	329.1	-1.5	0.0	0.0	4.8	0.0	0.0	-339.6
161	426728.72	5409640.81	379.00	0	DEN	32	37.4	22.3	0.0	0.0	0.0	79.9	0.1	-5.7	0.0	0.0	4.8	0.0	0.0	-19.3
161	426728.72	5409640.81	379.00	0	DEN	63	59.8	22.3	0.0	0.0	0.0	79.9	0.3	-5.7	0.0	0.0	4.8	0.0	0.0	2.8
161	426728.72	5409640.81	379.00	0	DEN	125	73.1	22.3	0.0	0.0	0.0	79.9	1.1	1.8	0.0	0.0	3.0	0.0	0.0	9.6
161	426728.72	5409640.81	379.00	0	DEN	250	67.3	22.3	0.0	0.0	0.0	79.9	2.9	-0.7	0.0	0.0	4.8	0.0	0.0	2.7
161	426728.72	5409640.81	379.00	0	DEN	500	67.2	22.3	0.0	0.0	0.0	79.9	5.4	-2.1	0.0	0.0	4.8	0.0	0.0	1.5
161	426728.72	5409640.81	379.00	0	DEN	1000	64.3	22.3	0.0	0.0	0.0	79.9	10.2	-2.1	0.0	0.0	4.9	0.0	0.0	-6.3
161	426728.72	5409640.81	379.00	0	DEN	2000	60.6	22.3	0.0	0.0	0.0	79.9	26.9	-2.1	0.0	0.0	5.0	0.0	0.0	-26.8
161	426728.72	5409640.81	379.00	0	DEN	4000	56.2	22.3	0.0	0.0	0.0	79.9	91.2	-2.1	0.0	0.0	5.1	0.0	0.0	-95.7
161	426728.72	5409640.81	379.00	0	DEN	8000	50.4	22.3	0.0	0.0	0.0	79.9	325.4	-2.1	0.0	0.0	5.5	0.0	0.0	-336.0
164	425501.73	5409457.61	299.91	0	DEN	32	37.4	22.9	0.0	0.0	0.0	81.0	0.1	-5.8	0.0	0.0	5.2	0.0	0.0	-20.2
164	425501.73	5409457.61	299.91	0	DEN	63	59.8	22.9	0.0	0.0	0.0	81.0	0.4	-5.8	0.0	0.0	5.5	0.0	0.0	1.5
164	425501.73	5409457.61	299.91	0	DEN	125	73.1	22.9	0.0	0.0	0.0	81.0	1.3	2.1	0.0	0.0	4.1	0.0	0.0	7.5
164	425501.73	5409457.61	299.91	0	DEN	250	67.3	22.9	0.0	0.0	0.0	81.0	3.3	-0.3	0.0	0.0	7.2	0.0	0.0	-1.1
164	425501.73	5409457.61	299.91	0	DEN	500	67.2	22.9	0.0	0.0	0.0	81.0	6.1	-1.7	0.0	0.0	8.8	0.0	0.0	-4.2
164	425501.73	5409457.61	299.91	0	DEN	1000	64.3	22.9	0.0	0.0	0.0	81.0	11.6	-1.7	0.0	0.0	10.9	0.0	0.0	-14.6
164	425501.73	5409457.61	299.91	0	DEN	2000	60.6	22.9	0.0	0.0	0.0	81.0	30.7	-1.7	0.0	0.0	13.3	0.0	0.0	-39.8
164	425501.73	5409457.61	299.91	0	DEN	4000	56.2	22.9	0.0	0.0	0.0	81.0	104.0	-1.7	0.0	0.0	16.0	0.0	0.0	-120.3
164	425501.73	5409457.61	299.91	0	DEN	8000	50.4	22.9	0.0	0.0	0.0	81.0	371.1	-1.7	0.0	0.0	18.9	0.0	0.0	-395.9
172	427438.12	5409740.24	392.57	0	DEN	32	37.4	21.6	0.0	0.0	0.0	79.9	0.1	-5.7	0.0	0.0	4.8	0.0	0.0	-20.1
172	427438.12	5409740.24	392.57	0	DEN	63	59.8	21.6	0.0	0.0	0.0	79.9	0.3	-5.7	0.0	0.0	4.8	0.0	0.0	2.1
172	427438.12	5409740.24	392.57	0	DEN	125	73.1	21.6	0.0	0.0	0.0	79.9	1.1	1.3	0.0	0.0	3.5	0.0	0.0	8.9
172	427438.12	5409740.24	392.57	0	DEN	250	67.3	21.6	0.0	0.0	0.0	79.9	2.9	-1.1	0.0	0.0	4.8	0.0	0.0	2.4
172	427438.12	5409740.24	392.57	0	DEN	500	67.2	21.6	0.0	0.0	0.0	79.9	5.4	-2.5	0.0	0.0	4.8	0.0	0.0	1.2
172	427438.12	5409740.24	392.57	0	DEN	1000	64.3	21.6	0.0	0.0	0.0	79.9	10.2	-2.5	0.0	0.0	4.8	0.0	0.0	-6.5
172	427438.12	5409740.24	392.57	0	DEN	2000	60.6	21.6	0.0	0.0	0.0	79.9	26.9	-2.5	0.0	0.0	4.8	0.0	0.0	-26.9
172	427438.12	5409740.24	392.57	0	DEN	4000	56.2	21.6	0.0	0.0	0.0	79.9	91.4	-2.5	0.0	0.0	4.8	0.0	0.0	-95.8
172	427438.12	5409740.24	392.57	0	DEN	8000	50.4	21.6	0.0	0.0	0.0	79.9	325.9	-2.5	0.0	0.0	4.8	0.0	0.0	-336.1
174	426581.95	5409592.33	378.07	0	DEN	32	37.4	21.6	0.0	0.0	0.0	79.9	0.1	-5.7	0.0	0.0	0.0	0.0	0.0	-15.3
174	426581.95	5409592.33	378.07	0	DEN	63	59.8	21.6	0.0	0.0	0.0	79.9	0.3	-5.7	0.0	0.0	0.0	0.0	0.0	6.9
174	426581.95	5409592.33	378.07	0	DEN	125	73.1	21.6	0.0	0.0	0.0	79.9	1.1	3.1	0.0	0.0	0.0	0.0	0.0	10.6
174	426581.95	5409592.33	378.07	0	DEN	250	67.3	21.6	0.0	0.0	0.0	79.9	2.9	0.3	0.0	0.0	0.0	0.0	0.0	5.8
174	426581.95	5409592.33	378.07	0	DEN	500	67.2	21.6	0.0	0.0	0.0	79.9	5.4	-1.5	0.0	0.0	0.0	0.0	0.0	5.0
174	426581.95	5409592.33	378.07	0	DEN	1000	64.3	21.6	0.0	0.0	0.0	79.9	10.2	-1.5	0.0	0.0	0.0	0.0	0.0	-2.7
174	426581.95	5409592.33	378.07	0	DEN	2000	60.6	21.6	0.0	0.0	0.0	79.9	26.9	-1.5	0.0	0.0	0.0	0.0	0.0	-23.1
174	426581.95	5409592.33	378.07	0	DEN	4000	56.2	21.6	0.0	0.0	0.0	79.9	91.1	-1.5	0.0	0.0	0.0	0.0	0.0	-91.7
174	426581.95	5409592.33	378.07	0	DEN	8000	50.4	21.6	0.0	0.0	0.0	79.9	324.9	-1.5	0.0	0.0	0.0	0.0	0.0	-331.3
178	426082.81	5409381.18	341.86	0	DEN	32	37.4	21.1	0.0	0.0	0.0	79.9	0.1	-5.7	0.0	0.0	4.8	0.0	0.0	-20.5
178	426082.81	5409381.18	341.86	0	DEN	63	59.8	21.1	0.0	0.0	0.0	79.9	0.3	-5.7	0.0	0.0	4.8	0.0	0.0	1.6

Line Source, ISO 9613, Name: "TRL_OP-LGO", ID: ""																					
Nr.	X	Y	Z	Refl.	DEN	Freq.	Lw	l/a	Optime	K0	Dc	Adiv	Aatm	Agr	Afol	Ahous	Abar	Cmet	RL	Lr
	(m)	(m)	(m)			(Hz)	dB(A)	dB	dB	(dB)	(dB)	(dB)	(dB)	(dB)	(dB)	(dB)	(dB)	(dB)	(dB)	dB(A)
178	426082.81	5409381.18	341.86	0	DEN	125	73.1	21.1	0.0	0.0	0.0	79.9	1.1	2.1	0.0	0.0	2.7	0.0	0.0	8.4
178	426082.81	5409381.18	341.86	0	DEN	250	67.3	21.1	0.0	0.0	0.0	79.9	2.9	-0.3	0.0	0.0	4.8	0.0	0.0	1.1
178	426082.81	5409381.18	341.86	0	DEN	500	67.2	21.1	0.0	0.0	0.0	79.9	5.4	-1.7	0.0	0.0	4.8	0.0	0.0	-0.1
178	426082.81	5409381.18	341.86	0	DEN	1000	64.3	21.1	0.0	0.0	0.0	79.9	10.2	-1.7	0.0	0.0	4.8	0.0	0.0	-7.8
178	426082.81	5409381.18	341.86	0	DEN	2000	60.6	21.1	0.0	0.0	0.0	79.9	26.9	-1.7	0.0	0.0	4.9	0.0	0.0	-28.3
178	426082.81	5409381.18	341.86	0	DEN	4000	56.2	21.1	0.0	0.0	0.0	79.9	91.3	-1.7	0.0	0.0	5.0	0.0	0.0	-97.2
178	426082.81	5409381.18	341.86	0	DEN	8000	50.4	21.1	0.0	0.0	0.0	79.9	325.8	-1.7	0.0	0.0	5.2	0.0	0.0	-337.7
182	427314.03	5409783.00	391.51	0	DEN	32	37.4	20.8	0.0	0.0	0.0	80.0	0.1	-5.7	0.0	0.0	4.8	0.0	0.0	-21.0
182	427314.03	5409783.00	391.51	0	DEN	63	59.8	20.8	0.0	0.0	0.0	80.0	0.3	-5.7	0.0	0.0	4.8	0.0	0.0	1.2
182	427314.03	5409783.00	391.51	0	DEN	125	73.1	20.8	0.0	0.0	0.0	80.0	1.2	1.3	0.0	0.0	3.5	0.0	0.0	7.9
182	427314.03	5409783.00	391.51	0	DEN	250	67.3	20.8	0.0	0.0	0.0	80.0	3.0	-1.2	0.0	0.0	4.8	0.0	0.0	1.5
182	427314.03	5409783.00	391.51	0	DEN	500	67.2	20.8	0.0	0.0	0.0	80.0	5.5	-2.6	0.0	0.0	4.8	0.0	0.0	0.3
182	427314.03	5409783.00	391.51	0	DEN	1000	64.3	20.8	0.0	0.0	0.0	80.0	10.4	-2.6	0.0	0.0	4.8	0.0	0.0	-7.5
182	427314.03	5409783.00	391.51	0	DEN	2000	60.6	20.8	0.0	0.0	0.0	80.0	27.4	-2.6	0.0	0.0	4.8	0.0	0.0	-28.2
182	427314.03	5409783.00	391.51	0	DEN	4000	56.2	20.8	0.0	0.0	0.0	80.0	92.9	-2.6	0.0	0.0	4.8	0.0	0.0	-98.1
182	427314.03	5409783.00	391.51	0	DEN	8000	50.4	20.8	0.0	0.0	0.0	80.0	331.3	-2.6	0.0	0.0	4.8	0.0	0.0	-342.3
188	426858.01	5409696.72	379.92	0	DEN	32	37.4	20.6	0.0	0.0	0.0	80.0	0.1	-5.7	0.0	0.0	0.0	0.0	0.0	-16.4
188	426858.01	5409696.72	379.92	0	DEN	63	59.8	20.6	0.0	0.0	0.0	80.0	0.3	-5.7	0.0	0.0	0.0	0.0	0.0	5.8
188	426858.01	5409696.72	379.92	0	DEN	125	73.1	20.6	0.0	0.0	0.0	80.0	1.2	1.8	0.0	0.0	0.0	0.0	0.0	10.8
188	426858.01	5409696.72	379.92	0	DEN	250	67.3	20.6	0.0	0.0	0.0	80.0	2.9	-0.7	0.0	0.0	0.0	0.0	0.0	5.7
188	426858.01	5409696.72	379.92	0	DEN	500	67.2	20.6	0.0	0.0	0.0	80.0	5.4	-2.1	0.0	0.0	0.0	0.0	0.0	4.5
188	426858.01	5409696.72	379.92	0	DEN	1000	64.3	20.6	0.0	0.0	0.0	80.0	10.3	-2.1	0.0	0.0	0.0	0.0	0.0	-3.3
188	426858.01	5409696.72	379.92	0	DEN	2000	60.6	20.6	0.0	0.0	0.0	80.0	27.1	-2.1	0.0	0.0	0.0	0.0	0.0	-23.8
188	426858.01	5409696.72	379.92	0	DEN	4000	56.2	20.6	0.0	0.0	0.0	80.0	92.0	-2.1	0.0	0.0	0.0	0.0	0.0	-93.1
188	426858.01	5409696.72	379.92	0	DEN	8000	50.4	20.6	0.0	0.0	0.0	80.0	328.2	-2.1	0.0	0.0	0.0	0.0	0.0	-335.1
207	426955.72	5409723.27	387.42	0	DEN	32	37.4	19.6	0.0	0.0	0.0	80.0	0.1	-5.7	0.0	0.0	0.0	0.0	0.0	-17.3
207	426955.72	5409723.27	387.42	0	DEN	63	59.8	19.6	0.0	0.0	0.0	80.0	0.3	-5.7	0.0	0.0	0.0	0.0	0.0	4.8
207	426955.72	5409723.27	387.42	0	DEN	125	73.1	19.6	0.0	0.0	0.0	80.0	1.2	1.8	0.0	0.0	0.0	0.0	0.0	9.8
207	426955.72	5409723.27	387.42	0	DEN	250	67.3	19.6	0.0	0.0	0.0	80.0	2.9	-0.7	0.0	0.0	0.0	0.0	0.0	4.7
207	426955.72	5409723.27	387.42	0	DEN	500	67.2	19.6	0.0	0.0	0.0	80.0	5.4	-2.1	0.0	0.0	0.0	0.0	0.0	3.5
207	426955.72	5409723.27	387.42	0	DEN	1000	64.3	19.6	0.0	0.0	0.0	80.0	10.3	-2.1	0.0	0.0	0.0	0.0	0.0	-4.3
207	426955.72	5409723.27	387.42	0	DEN	2000	60.6	19.6	0.0	0.0	0.0	80.0	27.2	-2.1	0.0	0.0	0.0	0.0	0.0	-24.9
207	426955.72	5409723.27	387.42	0	DEN	4000	56.2	19.6	0.0	0.0	0.0	80.0	92.3	-2.1	0.0	0.0	0.0	0.0	0.0	-94.3
207	426955.72	5409723.27	387.42	0	DEN	8000	50.4	19.6	0.0	0.0	0.0	80.0	329.0	-2.1	0.0	0.0	0.0	0.0	0.0	-336.9
208	426183.22	5409403.17	351.94	0	DEN	32	37.4	19.4	0.0	0.0	0.0	79.8	0.1	-5.7	0.0	0.0	4.8	0.0	0.0	-22.2
208	426183.22	5409403.17	351.94	0	DEN	63	59.8	19.4	0.0	0.0	0.0	79.8	0.3	-5.7	0.0	0.0	4.8	0.0	0.0	-0.0
208	426183.22	5409403.17	351.94	0	DEN	125	73.1	19.4	0.0	0.0	0.0	79.8	1.1	2.1	0.0	0.0	2.7	0.0	0.0	6.7
208	426183.22	5409403.17	351.94	0	DEN	250	67.3	19.4	0.0	0.0	0.0	79.8	2.9	-0.3	0.0	0.0	4.8	0.0	0.0	-0.5
208	426183.22	5409403.17	351.94	0	DEN	500	67.2	19.4	0.0	0.0	0.0	79.8	5.3	-1.7	0.0	0.0	4.9	0.0	0.0	-1.7
208	426183.22	5409403.17	351.94	0	DEN	1000	64.3	19.4	0.0	0.0	0.0	79.8	10.1	-1.7	0.0	0.0	5.1	0.0	0.0	-9.5
208	426183.22	5409403.17	351.94	0	DEN	2000	60.6	19.4	0.0	0.0	0.0	79.8	26.7	-1.7	0.0	0.0	5.3	0.0	0.0	-30.1
208	426183.22	5409403.17	351.94	0	DEN	4000	56.2	19.4	0.0	0.0	0.0	79.8	90.4	-1.7	0.0	0.0	5.8	0.0	0.0	-98.7
208	426183.22	5409403.17	351.94	0	DEN	8000	50.4	19.4	0.0	0.0	0.0	79.8	322.5	-1.7	0.0	0.0	6.6	0.0	0.0	-337.4
305	426316.48	5409600.28	366.28	0	DEN	32	37.4	17.5	0.0	0.0	0.0	80.2	0.1	-5.7	0.0	0.0	4.8	0.0	0.0	-24.4
305	426316.48	5409600.28	366.28	0	DEN	63	59.8	17.5	0.0	0.0	0.0	80.2	0.4	-5.7	0.0	0.0	4.8	0.0	0.0	-2.3
305	426316.48	5409600.28	366.28	0	DEN	125	73.1	17.5	0.0	0.0	0.0	80.2	1.2	5.0	0.0	0.0	0.0	0.0	0.0	4.2
305	426316.48	5409600.28	366.28	0	DEN	250	67.3	17.5	0.0	0.0	0.0	80.2	3.0	1.5	0.0	0.0	3.3	0.0	0.0	-3.2
305	426316.48	5409600.28	366.28	0	DEN	500	67.2	17.5	0.0	0.0	0.0	80.2	5.6	-0.9	0.0	0.0	4.8	0.0	0.0	-4.9
305	426316.48	5409600.28	366.28	0	DEN	1000	64.3	17.5	0.0	0.0	0.0	80.2	10.5	-0.9	0.0	0.0	4.8	0.0	0.0	-12.8
305	426316.48	5409600.28	366.28	0	DEN	2000	60.6	17.5	0.0	0.0	0.0	80.2	27.8	-0.9	0.0	0.0	4.8	0.0	0.0	-33.8
305	426316.48	5409600.28	366.28	0	DEN	4000	56.2	17.5	0.0	0.0	0.0	80.2	94.4	-0.9	0.0	0.0	4.8	0.0	0.0	-104.7
305	426316.48	5409600.28	366.28	0	DEN	8000	50.4	17.5	0.0	0.0	0.0	80.2	336.7	-0.9	0.0	0.0	4.8	0.0	0.0	-352.8

Line Source, ISO 9613, Name: "TRL_OP-NPAG", ID: ""																					
Nr.	X	Y	Z	Refl.	DEN	Freq.	Lw	l/a	Optime	K0	Dc	Adiv	Aatm	Agr	Afol	Ahous	Abar	Cmet	RL	Lr
	(m)	(m)	(m)			(Hz)	dB(A)	dB	dB	(dB)	(dB)	(dB)	(dB)	(dB)	(dB)	(dB)	(dB)	(dB)	(dB)	dB(A)
70	425584.38	5409336.42	338.65	0	DEN	32	43.1	24.7	0.0	0.0	0.0	80.6	0.1	-5.7	0.0	0.0	4.8	0.0	0.0	-11.9
70	425584.38	5409336.42	338.65	0	DEN	63	65.5	24.7	0.0	0.0	0.0	80.6	0.4	-5.7	0.0	0.0	4.8	0.0	0.0	10.2
70	425584.38	5409336.42	338.65	0	DEN	125	78.8	24.7	0.0	0.0	0.0	80.6	1.2	2.3	0.0	0.0	2.5	0.0	0.0	16.9
70	425584.38	5409336.42	338.65	0	DEN	250	73.0	24.7	0.0	0.0	0.0	80.6	3.2	-0.2	0.0	0.0	4.8	0.0	0.0	9.3
70	425584.38	5409336.42	338.65	0	DEN	500	72.9	24.7	0.0	0.0	0.0	80.6	5.8	-1.6	0.0	0.0	4.8	0.0	0.0	7.9
70	425584.38	5409336.42	338.65	0	DEN	1000	70.0	24.7	0.0	0.0	0.0	80.6	11.1	-1.6	0.0	0.0	4.8	0.0	0.0	-0.2
70	425584.38	5409336.42	338.65	0	DEN	2000	66.3	24.7	0.0	0.0	0.0	80.6	29.3	-1.6	0.0	0.0	4.8	0.0	0.0	-22.1

Line Source, ISO 9613, Name: "TRL_OP-NPAG", ID: ""																					
Nr.	X	Y	Z	Refl.	DEN	Freq.	Lw	l/a	Optime	K0	Dc	Adiv	Aatm	Agr	Afol	Ahous	Abar	Cmet	RL	Lr
	(m)	(m)	(m)			(Hz)	dB(A)	dB	dB	(dB)	(dB)	(dB)	(dB)	(dB)	(dB)	(dB)	(dB)	(dB)	(dB)	dB(A)
70	425584.38	5409336.42	338.65	0	DEN	4000	61.9	24.7	0.0	0.0	0.0	80.6	99.2	-1.6	0.0	0.0	4.8	0.0	0.0	-96.5
70	425584.38	5409336.42	338.65	0	DEN	8000	56.1	24.7	0.0	0.0	0.0	80.6	353.9	-1.6	0.0	0.0	4.8	0.0	0.0	-356.9
81	425299.82	5409344.20	349.02	0	DEN	32	43.1	24.4	0.0	0.0	0.0	81.1	0.1	-5.8	0.0	0.0	4.8	0.0	0.0	-12.8
81	425299.82	5409344.20	349.02	0	DEN	63	65.5	24.4	0.0	0.0	0.0	81.1	0.4	-5.8	0.0	0.0	4.8	0.0	0.0	9.3
81	425299.82	5409344.20	349.02	0	DEN	125	78.8	24.4	0.0	0.0	0.0	81.1	1.3	4.7	0.0	0.0	0.1	0.0	0.0	16.0
81	425299.82	5409344.20	349.02	0	DEN	250	73.0	24.4	0.0	0.0	0.0	81.1	3.4	1.4	0.0	0.0	3.4	0.0	0.0	8.1
81	425299.82	5409344.20	349.02	0	DEN	500	72.9	24.4	0.0	0.0	0.0	81.1	6.2	-0.9	0.0	0.0	4.8	0.0	0.0	6.0
81	425299.82	5409344.20	349.02	0	DEN	1000	70.0	24.4	0.0	0.0	0.0	81.1	11.8	-0.9	0.0	0.0	4.8	0.0	0.0	-2.4
81	425299.82	5409344.20	349.02	0	DEN	2000	66.3	24.4	0.0	0.0	0.0	81.1	31.1	-0.9	0.0	0.0	4.8	0.0	0.0	-25.4
81	425299.82	5409344.20	349.02	0	DEN	4000	61.9	24.4	0.0	0.0	0.0	81.1	105.4	-0.9	0.0	0.0	4.8	0.0	0.0	-104.2
81	425299.82	5409344.20	349.02	0	DEN	8000	56.1	24.4	0.0	0.0	0.0	81.1	376.0	-0.9	0.0	0.0	4.8	0.0	0.0	-380.5
86	425705.28	5409421.88	317.89	0	DEN	32	43.1	23.6	0.0	0.0	0.0	80.6	0.1	-5.7	0.0	0.0	4.8	0.0	0.0	-13.1
86	425705.28	5409421.88	317.89	0	DEN	63	65.5	23.6	0.0	0.0	0.0	80.6	0.4	-5.7	0.0	0.0	4.8	0.0	0.0	9.0
86	425705.28	5409421.88	317.89	0	DEN	125	78.8	23.6	0.0	0.0	0.0	80.6	1.2	2.2	0.0	0.0	2.6	0.0	0.0	15.7
86	425705.28	5409421.88	317.89	0	DEN	250	73.0	23.6	0.0	0.0	0.0	80.6	3.2	-0.3	0.0	0.0	4.9	0.0	0.0	8.2
86	425705.28	5409421.88	317.89	0	DEN	500	72.9	23.6	0.0	0.0	0.0	80.6	5.8	-1.6	0.0	0.0	4.9	0.0	0.0	6.7
86	425705.28	5409421.88	317.89	0	DEN	1000	70.0	23.6	0.0	0.0	0.0	80.6	11.1	-1.6	0.0	0.0	5.1	0.0	0.0	-1.6
86	425705.28	5409421.88	317.89	0	DEN	2000	66.3	23.6	0.0	0.0	0.0	80.6	29.2	-1.6	0.0	0.0	5.4	0.0	0.0	-23.7
86	425705.28	5409421.88	317.89	0	DEN	4000	61.9	23.6	0.0	0.0	0.0	80.6	99.1	-1.6	0.0	0.0	5.9	0.0	0.0	-98.5
86	425705.28	5409421.88	317.89	0	DEN	8000	56.1	23.6	0.0	0.0	0.0	80.6	353.5	-1.6	0.0	0.0	6.8	0.0	0.0	-359.6
90	424417.87	5410109.72	360.56	0	DEN	32	43.1	25.8	0.0	0.0	0.0	83.8	0.1	-5.8	0.0	0.0	0.0	0.0	0.0	-9.3
90	424417.87	5410109.72	360.56	0	DEN	63	65.5	25.8	0.0	0.0	0.0	83.8	0.5	-5.8	0.0	0.0	0.0	0.0	0.0	12.7
90	424417.87	5410109.72	360.56	0	DEN	125	78.8	25.8	0.0	0.0	0.0	83.8	1.8	1.7	0.0	0.0	0.0	0.0	0.0	17.2
90	424417.87	5410109.72	360.56	0	DEN	250	73.0	25.8	0.0	0.0	0.0	83.8	4.6	-0.7	0.0	0.0	0.0	0.0	0.0	11.1
90	424417.87	5410109.72	360.56	0	DEN	500	72.9	25.8	0.0	0.0	0.0	83.8	8.4	-2.1	0.0	0.0	0.0	0.0	0.0	8.5
90	424417.87	5410109.72	360.56	0	DEN	1000	70.0	25.8	0.0	0.0	0.0	83.8	16.0	-2.1	0.0	0.0	0.0	0.0	0.0	-1.9
90	424417.87	5410109.72	360.56	0	DEN	2000	66.3	25.8	0.0	0.0	0.0	83.8	42.3	-2.1	0.0	0.0	0.0	0.0	0.0	-31.9
90	424417.87	5410109.72	360.56	0	DEN	4000	61.9	25.8	0.0	0.0	0.0	83.8	143.5	-2.1	0.0	0.0	0.0	0.0	0.0	-137.5
90	424417.87	5410109.72	360.56	0	DEN	8000	56.1	25.8	0.0	0.0	0.0	83.8	511.7	-2.1	0.0	0.0	0.0	0.0	0.0	-511.5
97	425500.03	5409457.77	299.84	0	DEN	32	43.1	22.8	0.0	0.0	0.0	81.0	0.1	-5.8	0.0	0.0	5.2	0.0	0.0	-14.7
97	425500.03	5409457.77	299.84	0	DEN	63	65.5	22.8	0.0	0.0	0.0	81.0	0.4	-5.8	0.0	0.0	5.5	0.0	0.0	7.1
97	425500.03	5409457.77	299.84	0	DEN	125	78.8	22.8	0.0	0.0	0.0	81.0	1.3	2.2	0.0	0.0	4.0	0.0	0.0	13.0
97	425500.03	5409457.77	299.84	0	DEN	250	73.0	22.8	0.0	0.0	0.0	81.0	3.3	-0.3	0.0	0.0	7.2	0.0	0.0	4.5
97	425500.03	5409457.77	299.84	0	DEN	500	72.9	22.8	0.0	0.0	0.0	81.0	6.1	-1.7	0.0	0.0	8.8	0.0	0.0	1.4
97	425500.03	5409457.77	299.84	0	DEN	1000	70.0	22.8	0.0	0.0	0.0	81.0	11.6	-1.7	0.0	0.0	10.9	0.0	0.0	-9.1
97	425500.03	5409457.77	299.84	0	DEN	2000	66.3	22.8	0.0	0.0	0.0	81.0	30.7	-1.7	0.0	0.0	13.3	0.0	0.0	-34.3
97	425500.03	5409457.77	299.84	0	DEN	4000	61.9	22.8	0.0	0.0	0.0	81.0	104.1	-1.7	0.0	0.0	16.0	0.0	0.0	-114.7
97	425500.03	5409457.77	299.84	0	DEN	8000	56.1	22.8	0.0	0.0	0.0	81.0	371.2	-1.7	0.0	0.0	18.9	0.0	0.0	-390.5
98	424642.89	5409858.56	354.60	0	DEN	32	43.1	24.8	0.0	0.0	0.0	83.1	0.1	-5.8	0.0	0.0	4.8	0.0	0.0	-14.4
98	424642.89	5409858.56	354.60	0	DEN	63	65.5	24.8	0.0	0.0	0.0	83.1	0.5	-5.8	0.0	0.0	4.8	0.0	0.0	7.7
98	424642.89	5409858.56	354.60	0	DEN	125	78.8	24.8	0.0	0.0	0.0	83.1	1.7	2.0	0.0	0.0	2.7	0.0	0.0	14.0
98	424642.89	5409858.56	354.60	0	DEN	250	73.0	24.8	0.0	0.0	0.0	83.1	4.2	-0.5	0.0	0.0	4.8	0.0	0.0	6.1
98	424642.89	5409858.56	354.60	0	DEN	500	72.9	24.8	0.0	0.0	0.0	83.1	7.8	-1.9	0.0	0.0	4.8	0.0	0.0	3.9
98	424642.89	5409858.56	354.60	0	DEN	1000	70.0	24.8	0.0	0.0	0.0	83.1	14.8	-1.9	0.0	0.0	4.8	0.0	0.0	-6.0
98	424642.89	5409858.56	354.60	0	DEN	2000	66.3	24.8	0.0	0.0	0.0	83.1	39.0	-1.9	0.0	0.0	4.8	0.0	0.0	-34.0
98	424642.89	5409858.56	354.60	0	DEN	4000	61.9	24.8	0.0	0.0	0.0	83.1	132.4	-1.9	0.0	0.0	4.8	0.0	0.0	-131.8
98	424642.89	5409858.56	354.60	0	DEN	8000	56.1	24.8	0.0	0.0	0.0	83.1	472.3	-1.9	0.0	0.0	4.8	0.0	0.0	-477.4
100	424815.74	5409646.59	350.53	0	DEN	32	43.1	24.0	0.0	0.0	0.0	82.5	0.1	-5.8	0.0	0.0	4.8	0.0	0.0	-14.6
100	424815.74	5409646.59	350.53	0	DEN	63	65.5	24.0	0.0	0.0	0.0	82.5	0.5	-5.8	0.0	0.0	4.8	0.0	0.0	7.5
100	424815.74	5409646.59	350.53	0	DEN	125	78.8	24.0	0.0	0.0	0.0	82.5	1.5	2.1	0.0	0.0	2.7	0.0	0.0	13.9
100	424815.74	5409646.59	350.53	0	DEN	250	73.0	24.0	0.0	0.0	0.0	82.5	3.9	-0.3	0.0	0.0	4.8	0.0	0.0	6.0
100	424815.74	5409646.59	350.53	0	DEN	500	72.9	24.0	0.0	0.0	0.0	82.5	7.3	-1.7	0.0	0.0	4.8	0.0	0.0	4.0
100	424815.74	5409646.59	350.53	0	DEN	1000	70.0	24.0	0.0	0.0	0.0	82.5	13.8	-1.7	0.0	0.0	4.8	0.0	0.0	-5.4
100	424815.74	5409646.59	350.53	0	DEN	2000	66.3	24.0	0.0	0.0	0.0	82.5	36.4	-1.7	0.0	0.0	4.8	0.0	0.0	-31.7
100	424815.74	5409646.59	350.53	0	DEN	4000	61.9	24.0	0.0	0.0	0.0	82.5	123.5	-1.7	0.0	0.0	4.8	0.0	0.0	-123.2
100	424815.74	5409646.59	350.53	0	DEN	8000	56.1	24.0	0.0	0.0	0.0	82.5	440.4	-1.7	0.0	0.0	4.8	0.0	0.0	-446.0
105	424036.85	5410283.13	364.00	0	DEN	32	43.1	25.5	0.0	0.0	0.0	84.6	0.2	-5.8	0.0	0.0	0.0	0.0	0.0	-10.3
105	424036.85	5410283.13	364.00	0	DEN	63	65.5	25.5	0.0	0.0	0.0	84.6	0.6	-5.8	0.0	0.0	0.0	0.0	0.0	11.7
105	424036.85	5410283.13	364.00	0	DEN	125	78.8	25.5	0.0	0.0	0.0	84.6	2.0	2.1	0.0	0.0	0.0	0.0	0.0	15.7
105	424036.85	5410283.13	364.00	0	DEN	250	73.0	25.5	0.0	0.0	0.0	84.6	5.0	-0.4	0.0	0.0	0.0	0.0	0.0	9.3
105	424036.85	5410283.13	364.00	0	DEN	500	72.9	25.5	0.0	0.0	0.0	84.6	9.2	-1.8	0.0	0.0	0.0	0.0	0.0	6.4
105	424036.85	5410283.13	364.00	0	DEN	1000	70.0	25.5	0.0	0.0	0.0	84.6	17.4	-1.8	0.0	0.0	0.0	0.0	0.0	-4.8
105	424036.85	5410283.13	364.00	0	DEN	2000	66.3	25.5	0.0	0.0	0.0	84.6	46.1	-1.8	0.0	0.0	0.0	0.0	0.0	-37.1

Line Source, ISO 9613, Name: "TRL_OP-NPAG", ID: ""																				
Nr.	X	Y	Z	Refl.	DEN	Freq.	Lw	l/a	Optime	K0	Dc	Adiv	Aatm	Agr	Afol	Ahous	Abar	Cmet	RL	Lr
	(m)	(m)	(m)			(Hz)	dB(A)	dB	dB	(dB)	(dB)	(dB)	(dB)	(dB)	(dB)	(dB)	(dB)	(dB)	(dB)	dB(A)
105	424036.85	5410283.13	364.00	0	DEN	4000	61.9	25.5	0.0	0.0	0.0	84.6	156.3	-1.8	0.0	0.0	0.0	0.0	0.0	-151.7
105	424036.85	5410283.13	364.00	0	DEN	8000	56.1	25.5	0.0	0.0	0.0	84.6	557.4	-1.8	0.0	0.0	0.0	0.0	0.0	-558.7
111	424973.04	5409499.81	349.00	0	DEN	32	43.1	22.6	0.0	0.0	0.0	82.0	0.1	-5.8	0.0	0.0	4.8	0.0	0.0	-15.5
111	424973.04	5409499.81	349.00	0	DEN	63	65.5	22.6	0.0	0.0	0.0	82.0	0.4	-5.8	0.0	0.0	4.8	0.0	0.0	6.6
111	424973.04	5409499.81	349.00	0	DEN	125	78.8	22.6	0.0	0.0	0.0	82.0	1.5	2.3	0.0	0.0	2.5	0.0	0.0	13.1
111	424973.04	5409499.81	349.00	0	DEN	250	73.0	22.6	0.0	0.0	0.0	82.0	3.7	-0.2	0.0	0.0	4.8	0.0	0.0	5.2
111	424973.04	5409499.81	349.00	0	DEN	500	72.9	22.6	0.0	0.0	0.0	82.0	6.9	-1.6	0.0	0.0	4.8	0.0	0.0	3.4
111	424973.04	5409499.81	349.00	0	DEN	1000	70.0	22.6	0.0	0.0	0.0	82.0	13.0	-1.6	0.0	0.0	4.8	0.0	0.0	-5.7
111	424973.04	5409499.81	349.00	0	DEN	2000	66.3	22.6	0.0	0.0	0.0	82.0	34.3	-1.6	0.0	0.0	4.8	0.0	0.0	-30.7
111	424973.04	5409499.81	349.00	0	DEN	4000	61.9	22.6	0.0	0.0	0.0	82.0	116.4	-1.6	0.0	0.0	4.8	0.0	0.0	-117.2
111	424973.04	5409499.81	349.00	0	DEN	8000	56.1	22.6	0.0	0.0	0.0	82.0	415.3	-1.6	0.0	0.0	4.8	0.0	0.0	-421.9
119	423606.00	5410411.07	364.00	0	DEN	32	43.1	25.3	0.0	0.0	0.0	85.3	0.2	-5.9	0.0	0.0	0.0	0.0	0.0	-11.2
119	423606.00	5410411.07	364.00	0	DEN	63	65.5	25.3	0.0	0.0	0.0	85.3	0.6	-5.9	0.0	0.0	0.0	0.0	0.0	10.7
119	423606.00	5410411.07	364.00	0	DEN	125	78.8	25.3	0.0	0.0	0.0	85.3	2.1	1.9	0.0	0.0	0.0	0.0	0.0	14.7
119	423606.00	5410411.07	364.00	0	DEN	250	73.0	25.3	0.0	0.0	0.0	85.3	5.4	-0.5	0.0	0.0	0.0	0.0	0.0	8.1
119	423606.00	5410411.07	364.00	0	DEN	500	72.9	25.3	0.0	0.0	0.0	85.3	10.0	-1.9	0.0	0.0	0.0	0.0	0.0	4.8
119	423606.00	5410411.07	364.00	0	DEN	1000	70.0	25.3	0.0	0.0	0.0	85.3	18.9	-1.9	0.0	0.0	0.0	0.0	0.0	-7.0
119	423606.00	5410411.07	364.00	0	DEN	2000	66.3	25.3	0.0	0.0	0.0	85.3	50.0	-1.9	0.0	0.0	0.0	0.0	0.0	-41.8
119	423606.00	5410411.07	364.00	0	DEN	4000	61.9	25.3	0.0	0.0	0.0	85.3	169.5	-1.9	0.0	0.0	0.0	0.0	0.0	-165.7
119	423606.00	5410411.07	364.00	0	DEN	8000	56.1	25.3	0.0	0.0	0.0	85.3	604.4	-1.9	0.0	0.0	0.0	0.0	0.0	-606.4
123	425102.15	5409403.92	349.02	0	DEN	32	43.1	21.5	0.0	0.0	0.0	81.6	0.1	-5.8	0.0	0.0	4.8	0.0	0.0	-16.1
123	425102.15	5409403.92	349.02	0	DEN	63	65.5	21.5	0.0	0.0	0.0	81.6	0.4	-5.8	0.0	0.0	4.8	0.0	0.0	6.0
123	425102.15	5409403.92	349.02	0	DEN	125	78.8	21.5	0.0	0.0	0.0	81.6	1.4	2.9	0.0	0.0	1.9	0.0	0.0	12.5
123	425102.15	5409403.92	349.02	0	DEN	250	73.0	21.5	0.0	0.0	0.0	81.6	3.5	0.2	0.0	0.0	4.5	0.0	0.0	4.6
123	425102.15	5409403.92	349.02	0	DEN	500	72.9	21.5	0.0	0.0	0.0	81.6	6.5	-1.3	0.0	0.0	4.8	0.0	0.0	2.8
123	425102.15	5409403.92	349.02	0	DEN	1000	70.0	21.5	0.0	0.0	0.0	81.6	12.4	-1.3	0.0	0.0	4.8	0.0	0.0	-6.0
123	425102.15	5409403.92	349.02	0	DEN	2000	66.3	21.5	0.0	0.0	0.0	81.6	32.8	-1.3	0.0	0.0	4.8	0.0	0.0	-30.1
123	425102.15	5409403.92	349.02	0	DEN	4000	61.9	21.5	0.0	0.0	0.0	81.6	111.2	-1.3	0.0	0.0	4.8	0.0	0.0	-112.9
123	425102.15	5409403.92	349.02	0	DEN	8000	56.1	21.5	0.0	0.0	0.0	81.6	396.8	-1.3	0.0	0.0	4.8	0.0	0.0	-404.2
127	425777.04	5409373.77	328.24	0	DEN	32	43.1	20.0	0.0	0.0	0.0	80.4	0.1	-5.7	0.0	0.0	4.8	0.0	0.0	-16.5
127	425777.04	5409373.77	328.24	0	DEN	63	65.5	20.0	0.0	0.0	0.0	80.4	0.4	-5.7	0.0	0.0	4.8	0.0	0.0	5.7
127	425777.04	5409373.77	328.24	0	DEN	125	78.8	20.0	0.0	0.0	0.0	80.4	1.2	2.3	0.0	0.0	2.5	0.0	0.0	12.4
127	425777.04	5409373.77	328.24	0	DEN	250	73.0	20.0	0.0	0.0	0.0	80.4	3.1	-0.2	0.0	0.0	4.8	0.0	0.0	4.8
127	425777.04	5409373.77	328.24	0	DEN	500	72.9	20.0	0.0	0.0	0.0	80.4	5.7	-1.6	0.0	0.0	4.9	0.0	0.0	3.5
127	425777.04	5409373.77	328.24	0	DEN	1000	70.0	20.0	0.0	0.0	0.0	80.4	10.8	-1.6	0.0	0.0	5.1	0.0	0.0	-4.7
127	425777.04	5409373.77	328.24	0	DEN	2000	66.3	20.0	0.0	0.0	0.0	80.4	28.4	-1.6	0.0	0.0	5.3	0.0	0.0	-26.3
127	425777.04	5409373.77	328.24	0	DEN	4000	61.9	20.0	0.0	0.0	0.0	80.4	96.5	-1.6	0.0	0.0	5.8	0.0	0.0	-99.2
127	425777.04	5409373.77	328.24	0	DEN	8000	56.1	20.0	0.0	0.0	0.0	80.4	344.1	-1.6	0.0	0.0	6.7	0.0	0.0	-353.5
165	423795.93	5410301.42	364.00	0	DEN	32	43.1	21.2	0.0	0.0	0.0	84.9	0.2	-5.8	0.0	0.0	0.0	0.0	0.0	-15.0
165	423795.93	5410301.42	364.00	0	DEN	63	65.5	21.2	0.0	0.0	0.0	84.9	0.6	-5.8	0.0	0.0	0.0	0.0	0.0	7.0
165	423795.93	5410301.42	364.00	0	DEN	125	78.8	21.2	0.0	0.0	0.0	84.9	2.0	2.1	0.0	0.0	0.0	0.0	0.0	10.9
165	423795.93	5410301.42	364.00	0	DEN	250	73.0	21.2	0.0	0.0	0.0	84.9	5.2	-0.4	0.0	0.0	0.0	0.0	0.0	4.4
165	423795.93	5410301.42	364.00	0	DEN	500	72.9	21.2	0.0	0.0	0.0	84.9	9.6	-1.8	0.0	0.0	0.0	0.0	0.0	1.3
165	423795.93	5410301.42	364.00	0	DEN	1000	70.0	21.2	0.0	0.0	0.0	84.9	18.1	-1.8	0.0	0.0	0.0	0.0	0.0	-10.1
165	423795.93	5410301.42	364.00	0	DEN	2000	66.3	21.2	0.0	0.0	0.0	84.9	47.9	-1.8	0.0	0.0	0.0	0.0	0.0	-43.6
165	423795.93	5410301.42	364.00	0	DEN	4000	61.9	21.2	0.0	0.0	0.0	84.9	162.4	-1.8	0.0	0.0	0.0	0.0	0.0	-162.5
165	423795.93	5410301.42	364.00	0	DEN	8000	56.1	21.2	0.0	0.0	0.0	84.9	579.4	-1.8	0.0	0.0	0.0	0.0	0.0	-585.3
204	424244.57	5410248.06	364.00	0	DEN	32	43.1	18.3	0.0	0.0	0.0	84.3	0.1	-5.8	0.0	0.0	0.0	0.0	0.0	-17.2
204	424244.57	5410248.06	364.00	0	DEN	63	65.5	18.3	0.0	0.0	0.0	84.3	0.6	-5.8	0.0	0.0	0.0	0.0	0.0	4.8
204	424244.57	5410248.06	364.00	0	DEN	125	78.8	18.3	0.0	0.0	0.0	84.3	1.9	1.6	0.0	0.0	0.0	0.0	0.0	9.4
204	424244.57	5410248.06	364.00	0	DEN	250	73.0	18.3	0.0	0.0	0.0	84.3	4.8	-0.9	0.0	0.0	0.0	0.0	0.0	3.1
204	424244.57	5410248.06	364.00	0	DEN	500	72.9	18.3	0.0	0.0	0.0	84.3	8.9	-2.2	0.0	0.0	0.0	0.0	0.0	0.3
204	424244.57	5410248.06	364.00	0	DEN	1000	70.0	18.3	0.0	0.0	0.0	84.3	16.8	-2.2	0.0	0.0	0.0	0.0	0.0	-10.5
204	424244.57	5410248.06	364.00	0	DEN	2000	66.3	18.3	0.0	0.0	0.0	84.3	44.4	-2.2	0.0	0.0	0.0	0.0	0.0	-41.8
204	424244.57	5410248.06	364.00	0	DEN	4000	61.9	18.3	0.0	0.0	0.0	84.3	150.7	-2.2	0.0	0.0	0.0	0.0	0.0	-152.5
204	424244.57	5410248.06	364.00	0	DEN	8000	56.1	18.3	0.0	0.0	0.0	84.3	537.4	-2.2	0.0	0.0	0.0	0.0	0.0	-545.0
325	425820.22	5409402.51	327.37	0	DEN	32	43.1	11.5	0.0	0.0	0.0	80.4	0.1	-5.7	0.0	0.0	4.8	0.0	0.0	-25.0
325	425820.22	5409402.51	327.37	0	DEN	63	65.5	11.5	0.0	0.0	0.0	80.4	0.4	-5.7	0.0	0.0	4.8	0.0	0.0	-2.9
325	425820.22	5409402.51	327.37	0	DEN	125	78.8	11.5	0.0	0.0	0.0	80.4	1.2	2.2	0.0	0.0	2.6	0.0	0.0	3.9
325	425820.22	5409402.51	327.37	0	DEN	250	73.0	11.5	0.0	0.0	0.0	80.4	3.1	-0.2	0.0	0.0	4.8	0.0	0.0	-3.6
325	425820.22	5409402.51	327.37	0	DEN	500	72.9	11.5	0.0	0.0	0.0	80.4	5.7	-1.6	0.0	0.0	4.8	0.0	0.0	-4.9
325	425820.22	5409402.51	327.37	0	DEN	1000	70.0	11.5	0.0	0.0	0.0	80.4	10.8	-1.6	0.0	0.0	4.8	0.0	0.0	-12.9
325	425820.22	5409402.51	327.37	0	DEN	2000	66.3	11.5	0.0	0.0	0.0	80.4	28.4	-1.6	0.0	0.0	4.8	0.0	0.0	-34.3

Line Source, ISO 9613, Name: "TRL_OP-NPAG", ID: ""																				
Nr.	X	Y	Z	Refl.	DEN	Freq.	Lw	l/a	Optime	K0	Dc	Adiv	Aatm	Agr	Afol	Ahous	Abar	Cmet	RL	Lr
	(m)	(m)	(m)			(Hz)	dB(A)	dB	dB	(dB)	(dB)	(dB)	(dB)	(dB)	(dB)	(dB)	(dB)	(dB)	(dB)	dB(A)
325	425820.22	5409402.51	327.37	0	DEN	4000	61.9	11.5	0.0	0.0	0.0	80.4	96.4	-1.6	0.0	0.0	4.9	0.0	0.0	-106.8
325	425820.22	5409402.51	327.37	0	DEN	8000	56.1	11.5	0.0	0.0	0.0	80.4	344.0	-1.6	0.0	0.0	5.0	0.0	0.0	-360.2

vert. Area Source, ISO 9613, Name: "MB_BD-E", ID: ""																				
Nr.	X	Y	Z	Refl.	DEN	Freq.	Lw	l/a	Optime	K0	Dc	Adiv	Aatm	Agr	Afol	Ahous	Abar	Cmet	RL	Lr
	(m)	(m)	(m)			(Hz)	dB(A)	dB	dB	(dB)	(dB)	(dB)	(dB)	(dB)	(dB)	(dB)	(dB)	(dB)	(dB)	dB(A)
366	426596.12	5410952.85	382.50	0	DEN	63	55.1	13.1	0.0	3.0	0.0	83.2	0.5	-5.6	0.0	0.0	4.8	0.0	0.0	-11.7
366	426596.12	5410952.85	382.50	0	DEN	125	64.8	13.1	0.0	3.0	0.0	83.2	1.7	1.2	0.0	0.0	3.6	0.0	0.0	-8.7
366	426596.12	5410952.85	382.50	0	DEN	250	64.1	13.1	0.0	3.0	0.0	83.2	4.3	-1.3	0.0	0.0	4.8	0.0	0.0	-10.8
366	426596.12	5410952.85	382.50	0	DEN	500	74.0	13.1	0.0	3.0	0.0	83.2	7.9	-2.7	0.0	0.0	4.8	0.0	0.0	-3.1
366	426596.12	5410952.85	382.50	0	DEN	1000	72.6	13.1	0.0	3.0	0.0	83.2	15.0	-2.7	0.0	0.0	4.8	0.0	0.0	-11.6
366	426596.12	5410952.85	382.50	0	DEN	2000	70.5	13.1	0.0	3.0	0.0	83.2	39.5	-2.7	0.0	0.0	4.8	0.0	0.0	-38.2
366	426596.12	5410952.85	382.50	0	DEN	4000	65.2	13.1	0.0	3.0	0.0	83.2	134.1	-2.7	0.0	0.0	4.8	0.0	0.0	-138.1
366	426596.12	5410952.85	382.50	0	DEN	8000	57.2	13.1	0.0	3.0	0.0	83.2	478.2	-2.7	0.0	0.0	4.8	0.0	0.0	-490.2
367	426596.12	5410952.85	378.50	0	DEN	63	55.1	13.1	0.0	3.0	0.0	83.2	0.5	-5.7	0.0	0.0	4.8	0.0	0.0	-11.6
367	426596.12	5410952.85	378.50	0	DEN	125	64.8	13.1	0.0	3.0	0.0	83.2	1.7	1.1	0.0	0.0	3.7	0.0	0.0	-8.7
367	426596.12	5410952.85	378.50	0	DEN	250	64.1	13.1	0.0	3.0	0.0	83.2	4.3	-1.4	0.0	0.0	4.8	0.0	0.0	-10.7
367	426596.12	5410952.85	378.50	0	DEN	500	74.0	13.1	0.0	3.0	0.0	83.2	7.9	-2.7	0.0	0.0	4.8	0.0	0.0	-3.0
367	426596.12	5410952.85	378.50	0	DEN	1000	72.6	13.1	0.0	3.0	0.0	83.2	15.0	-2.7	0.0	0.0	4.8	0.0	0.0	-11.5
367	426596.12	5410952.85	378.50	0	DEN	2000	70.5	13.1	0.0	3.0	0.0	83.2	39.5	-2.7	0.0	0.0	4.8	0.0	0.0	-38.2
367	426596.12	5410952.85	378.50	0	DEN	4000	65.2	13.1	0.0	3.0	0.0	83.2	134.1	-2.7	0.0	0.0	4.8	0.0	0.0	-138.0
367	426596.12	5410952.85	378.50	0	DEN	8000	57.2	13.1	0.0	3.0	0.0	83.2	478.2	-2.7	0.0	0.0	4.8	0.0	0.0	-490.1
368	426596.12	5410952.85	377.50	0	DEN	63	55.1	13.1	0.0	3.0	0.0	83.2	0.5	-5.7	0.0	0.0	4.8	0.0	0.0	-11.6
368	426596.12	5410952.85	377.50	0	DEN	125	64.8	13.1	0.0	3.0	0.0	83.2	1.7	1.1	0.0	0.0	3.7	0.0	0.0	-8.7
368	426596.12	5410952.85	377.50	0	DEN	250	64.1	13.1	0.0	3.0	0.0	83.2	4.3	-1.4	0.0	0.0	4.8	0.0	0.0	-10.7
368	426596.12	5410952.85	377.50	0	DEN	500	74.0	13.1	0.0	3.0	0.0	83.2	7.9	-2.8	0.0	0.0	4.8	0.0	0.0	-3.0
368	426596.12	5410952.85	377.50	0	DEN	1000	72.6	13.1	0.0	3.0	0.0	83.2	15.0	-2.8	0.0	0.0	4.8	0.0	0.0	-11.5
368	426596.12	5410952.85	377.50	0	DEN	2000	70.5	13.1	0.0	3.0	0.0	83.2	39.5	-2.8	0.0	0.0	4.8	0.0	0.0	-38.1
368	426596.12	5410952.85	377.50	0	DEN	4000	65.2	13.1	0.0	3.0	0.0	83.2	134.1	-2.8	0.0	0.0	4.8	0.0	0.0	-138.0
368	426596.12	5410952.85	377.50	0	DEN	8000	57.2	13.1	0.0	3.0	0.0	83.2	478.2	-2.8	0.0	0.0	4.8	0.0	0.0	-490.1
369	426596.12	5410952.85	380.50	0	DEN	63	55.1	13.1	0.0	3.0	0.0	83.2	0.5	-5.6	0.0	0.0	4.8	0.0	0.0	-11.6
369	426596.12	5410952.85	380.50	0	DEN	125	64.8	13.1	0.0	3.0	0.0	83.2	1.7	1.1	0.0	0.0	3.6	0.0	0.0	-8.7
369	426596.12	5410952.85	380.50	0	DEN	250	64.1	13.1	0.0	3.0	0.0	83.2	4.3	-1.3	0.0	0.0	4.8	0.0	0.0	-10.7
369	426596.12	5410952.85	380.50	0	DEN	500	74.0	13.1	0.0	3.0	0.0	83.2	7.9	-2.7	0.0	0.0	4.8	0.0	0.0	-3.1
369	426596.12	5410952.85	380.50	0	DEN	1000	72.6	13.1	0.0	3.0	0.0	83.2	15.0	-2.7	0.0	0.0	4.8	0.0	0.0	-11.5
369	426596.12	5410952.85	380.50	0	DEN	2000	70.5	13.1	0.0	3.0	0.0	83.2	39.5	-2.7	0.0	0.0	4.8	0.0	0.0	-38.2
369	426596.12	5410952.85	380.50	0	DEN	4000	65.2	13.1	0.0	3.0	0.0	83.2	134.1	-2.7	0.0	0.0	4.8	0.0	0.0	-138.0
369	426596.12	5410952.85	380.50	0	DEN	8000	57.2	13.1	0.0	3.0	0.0	83.2	478.2	-2.7	0.0	0.0	4.8	0.0	0.0	-490.1
370	426596.12	5410952.85	371.50	0	DEN	63	55.1	13.1	0.0	3.0	0.0	83.2	0.5	-5.8	0.0	0.0	4.8	0.0	0.0	-11.4
370	426596.12	5410952.85	371.50	0	DEN	125	64.8	13.1	0.0	3.0	0.0	83.2	1.7	1.0	0.0	0.0	3.7	0.0	0.0	-8.7
370	426596.12	5410952.85	371.50	0	DEN	250	64.1	13.1	0.0	3.0	0.0	83.2	4.3	-1.4	0.0	0.0	4.8	0.0	0.0	-10.6
370	426596.12	5410952.85	371.50	0	DEN	500	74.0	13.1	0.0	3.0	0.0	83.2	7.9	-2.9	0.0	0.0	4.8	0.0	0.0	-2.9
370	426596.12	5410952.85	371.50	0	DEN	1000	72.6	13.1	0.0	3.0	0.0	83.2	15.0	-2.9	0.0	0.0	4.8	0.0	0.0	-11.4
370	426596.12	5410952.85	371.50	0	DEN	2000	70.5	13.1	0.0	3.0	0.0	83.2	39.5	-2.9	0.0	0.0	4.8	0.0	0.0	-38.0
370	426596.12	5410952.85	371.50	0	DEN	4000	65.2	13.1	0.0	3.0	0.0	83.2	134.1	-2.9	0.0	0.0	4.8	0.0	0.0	-137.9
370	426596.12	5410952.85	371.50	0	DEN	8000	57.2	13.1	0.0	3.0	0.0	83.2	478.2	-2.9	0.0	0.0	4.8	0.0	0.0	-490.0
371	426596.12	5410952.85	381.50	0	DEN	63	55.1	13.1	0.0	3.0	0.0	83.2	0.5	-5.6	0.0	0.0	4.8	0.0	0.0	-11.6
371	426596.12	5410952.85	381.50	0	DEN	125	64.8	13.1	0.0	3.0	0.0	83.2	1.7	1.2	0.0	0.0	3.6	0.0	0.0	-8.7
371	426596.12	5410952.85	381.50	0	DEN	250	64.1	13.1	0.0	3.0	0.0	83.2	4.3	-1.3	0.0	0.0	4.8	0.0	0.0	-10.8
371	426596.12	5410952.85	381.50	0	DEN	500	74.0	13.1	0.0	3.0	0.0	83.2	7.9	-2.7	0.0	0.0	4.8	0.0	0.0	-3.1
371	426596.12	5410952.85	381.50	0	DEN	1000	72.6	13.1	0.0	3.0	0.0	83.2	15.0	-2.7	0.0	0.0	4.8	0.0	0.0	-11.6
371	426596.12	5410952.85	381.50	0	DEN	2000	70.5	13.1	0.0	3.0	0.0	83.2	39.5	-2.7	0.0	0.0	4.8	0.0	0.0	-38.2
371	426596.12	5410952.85	381.50	0	DEN	4000	65.2	13.1	0.0	3.0	0.0	83.2	134.1	-2.7	0.0	0.0	4.8	0.0	0.0	-138.1
371	426596.12	5410952.85	381.50	0	DEN	8000	57.2	13.1	0.0	3.0	0.0	83.2	478.2	-2.7	0.0	0.0	4.8	0.0	0.0	-490.2
372	426596.12	5410952.85	372.50	0	DEN	63	55.1	13.1	0.0	3.0	0.0	83.2	0.5	-5.8	0.0	0.0	4.8	0.0	0.0	-11.4
372	426596.12	5410952.85	372.50	0	DEN	125	64.8	13.1	0.0	3.0	0.0	83.2	1.7	1.0	0.0	0.0	3.8	0.0	0.0	-8.7
372	426596.12	5410952.85	372.50	0	DEN	250	64.1	13.1	0.0	3.0	0.0	83.2	4.3	-1.5	0.0	0.0	4.8	0.0	0.0	-10.6
372	426596.12	5410952.85	372.50	0	DEN	500	74.0	13.1	0.0	3.0	0.0	83.2	7.9	-2.9	0.0	0.0	4.8	0.0	0.0	-2.9
372	426596.12	5410952.85	372.50	0	DEN	1000	72.6	13.1	0.0	3.0	0.0	83.2	15.0	-2.9	0.0	0.0	4.8	0.0	0.0	-11.4
372	426596.12	5410952.85	372.50	0	DEN	2000	70.5	13.1	0.0	3.0	0.0	83.2	39.5	-2.9	0.0	0.0	4.8	0.0	0.0	-38.0
372	426596.12	5410952.85	372.50	0	DEN	4000	65.2	13.1	0.0	3.0	0.0	83.2	134.1	-2.9	0.0	0.0	4.8	0.0	0.0	-137.9
372	426596.12	5410952.85	372.50	0	DEN	8000	57.2	13.1	0.0	3.0	0.0	83.2	478.2	-2.9	0.0	0.0	4.8	0.0	0.0	-490.0
373	426596.12	5410952.85	370.50	0	DEN	63	55.1	13.1	0.0	3.0	0.0	83.2	0.5	-5.9	0.0	0.0	4.8	0.0	0.0	-11.4

vert. Area Source, ISO 9613, Name: "MB_BD-E", ID: ""																					
Nr.	X	Y	Z	Refl.	DEN	Freq.	Lw	l/a	Optime	K0	Dc	Adiv	Aatm	Agr	Afol	Ahous	Abar	Cmet	RL	Lr
	(m)	(m)	(m)			(Hz)	dB(A)	dB	dB	(dB)	(dB)	(dB)	(dB)	(dB)	(dB)	(dB)	(dB)	(dB)	(dB)	dB(A)
373	426596.12	5410952.85	370.50	0	DEN	125	64.8	13.1	0.0	3.0	0.0	83.2	1.7	0.9	0.0	0.0	3.9	0.0	0.0	-8.7
373	426596.12	5410952.85	370.50	0	DEN	250	64.1	13.1	0.0	3.0	0.0	83.2	4.3	-1.5	0.0	0.0	4.8	0.0	0.0	-10.5
373	426596.12	5410952.85	370.50	0	DEN	500	74.0	13.1	0.0	3.0	0.0	83.2	7.9	-2.9	0.0	0.0	4.8	0.0	0.0	-2.8
373	426596.12	5410952.85	370.50	0	DEN	1000	72.6	13.1	0.0	3.0	0.0	83.2	15.0	-2.9	0.0	0.0	4.8	0.0	0.0	-11.3
373	426596.12	5410952.85	370.50	0	DEN	2000	70.5	13.1	0.0	3.0	0.0	83.2	39.5	-2.9	0.0	0.0	4.8	0.0	0.0	-38.0
373	426596.12	5410952.85	370.50	0	DEN	4000	65.2	13.1	0.0	3.0	0.0	83.2	134.1	-2.9	0.0	0.0	4.8	0.0	0.0	-137.8
373	426596.12	5410952.85	370.50	0	DEN	8000	57.2	13.1	0.0	3.0	0.0	83.2	478.2	-2.9	0.0	0.0	4.8	0.0	0.0	-489.9
374	426596.12	5410952.85	376.50	0	DEN	63	55.1	13.1	0.0	3.0	0.0	83.2	0.5	-5.7	0.0	0.0	4.8	0.0	0.0	-11.5
374	426596.12	5410952.85	376.50	0	DEN	125	64.8	13.1	0.0	3.0	0.0	83.2	1.7	1.0	0.0	0.0	3.7	0.0	0.0	-8.7
374	426596.12	5410952.85	376.50	0	DEN	250	64.1	13.1	0.0	3.0	0.0	83.2	4.3	-1.4	0.0	0.0	4.8	0.0	0.0	-10.6
374	426596.12	5410952.85	376.50	0	DEN	500	74.0	13.1	0.0	3.0	0.0	83.2	7.9	-2.8	0.0	0.0	4.8	0.0	0.0	-3.0
374	426596.12	5410952.85	376.50	0	DEN	1000	72.6	13.1	0.0	3.0	0.0	83.2	15.0	-2.8	0.0	0.0	4.8	0.0	0.0	-11.4
374	426596.12	5410952.85	376.50	0	DEN	2000	70.5	13.1	0.0	3.0	0.0	83.2	39.5	-2.8	0.0	0.0	4.8	0.0	0.0	-38.1
374	426596.12	5410952.85	376.50	0	DEN	4000	65.2	13.1	0.0	3.0	0.0	83.2	134.1	-2.8	0.0	0.0	4.8	0.0	0.0	-137.9
374	426596.12	5410952.85	376.50	0	DEN	8000	57.2	13.1	0.0	3.0	0.0	83.2	478.2	-2.8	0.0	0.0	4.8	0.0	0.0	-490.0
375	426596.12	5410952.85	369.50	0	DEN	63	55.1	13.1	0.0	3.0	0.0	83.2	0.5	-5.9	0.0	0.0	4.8	0.0	0.0	-11.4
375	426596.12	5410952.85	369.50	0	DEN	125	64.8	13.1	0.0	3.0	0.0	83.2	1.7	1.2	0.0	0.0	3.5	0.0	0.0	-8.7
375	426596.12	5410952.85	369.50	0	DEN	250	64.1	13.1	0.0	3.0	0.0	83.2	4.3	-1.1	0.0	0.0	4.8	0.0	0.0	-10.9
375	426596.12	5410952.85	369.50	0	DEN	500	74.0	13.1	0.0	3.0	0.0	83.2	7.9	-2.3	0.0	0.0	4.8	0.0	0.0	-3.5
375	426596.12	5410952.85	369.50	0	DEN	1000	72.6	13.1	0.0	3.0	0.0	83.2	15.0	-2.7	0.0	0.0	4.8	0.0	0.0	-11.5
375	426596.12	5410952.85	369.50	0	DEN	2000	70.5	13.1	0.0	3.0	0.0	83.2	39.5	-2.9	0.0	0.0	4.8	0.0	0.0	-38.0
375	426596.12	5410952.85	369.50	0	DEN	4000	65.2	13.1	0.0	3.0	0.0	83.2	134.1	-2.9	0.0	0.0	4.8	0.0	0.0	-137.9
375	426596.12	5410952.85	369.50	0	DEN	8000	57.2	13.1	0.0	3.0	0.0	83.2	478.2	-2.9	0.0	0.0	4.8	0.0	0.0	-490.0
376	426596.12	5410952.85	383.50	0	DEN	63	55.1	13.1	0.0	3.0	0.0	83.2	0.5	-5.6	0.0	0.0	4.8	0.0	0.0	-11.7
376	426596.12	5410952.85	383.50	0	DEN	125	64.8	13.1	0.0	3.0	0.0	83.2	1.7	1.2	0.0	0.0	3.6	0.0	0.0	-8.7
376	426596.12	5410952.85	383.50	0	DEN	250	64.1	13.1	0.0	3.0	0.0	83.2	4.3	-1.2	0.0	0.0	4.8	0.0	0.0	-10.8
376	426596.12	5410952.85	383.50	0	DEN	500	74.0	13.1	0.0	3.0	0.0	83.2	7.9	-2.6	0.0	0.0	4.8	0.0	0.0	-3.1
376	426596.12	5410952.85	383.50	0	DEN	1000	72.6	13.1	0.0	3.0	0.0	83.2	15.0	-2.6	0.0	0.0	4.8	0.0	0.0	-11.6
376	426596.12	5410952.85	383.50	0	DEN	2000	70.5	13.1	0.0	3.0	0.0	83.2	39.5	-2.6	0.0	0.0	4.8	0.0	0.0	-38.3
376	426596.12	5410952.85	383.50	0	DEN	4000	65.2	13.1	0.0	3.0	0.0	83.2	134.1	-2.6	0.0	0.0	4.8	0.0	0.0	-138.1
376	426596.12	5410952.85	383.50	0	DEN	8000	57.2	13.1	0.0	3.0	0.0	83.2	478.2	-2.6	0.0	0.0	4.8	0.0	0.0	-490.2
377	426596.12	5410952.85	374.50	0	DEN	63	55.1	13.1	0.0	3.0	0.0	83.2	0.5	-5.8	0.0	0.0	4.8	0.0	0.0	-11.5
377	426596.12	5410952.85	374.50	0	DEN	125	64.8	13.1	0.0	3.0	0.0	83.2	1.7	1.0	0.0	0.0	3.7	0.0	0.0	-8.7
377	426596.12	5410952.85	374.50	0	DEN	250	64.1	13.1	0.0	3.0	0.0	83.2	4.3	-1.4	0.0	0.0	4.8	0.0	0.0	-10.6
377	426596.12	5410952.85	374.50	0	DEN	500	74.0	13.1	0.0	3.0	0.0	83.2	7.9	-2.8	0.0	0.0	4.8	0.0	0.0	-2.9
377	426596.12	5410952.85	374.50	0	DEN	1000	72.6	13.1	0.0	3.0	0.0	83.2	15.0	-2.8	0.0	0.0	4.8	0.0	0.0	-11.4
377	426596.12	5410952.85	374.50	0	DEN	2000	70.5	13.1	0.0	3.0	0.0	83.2	39.5	-2.8	0.0	0.0	4.8	0.0	0.0	-38.1
377	426596.12	5410952.85	374.50	0	DEN	4000	65.2	13.1	0.0	3.0	0.0	83.2	134.1	-2.8	0.0	0.0	4.8	0.0	0.0	-137.9
377	426596.12	5410952.85	374.50	0	DEN	8000	57.2	13.1	0.0	3.0	0.0	83.2	478.2	-2.8	0.0	0.0	4.8	0.0	0.0	-490.0
378	426596.12	5410952.85	379.50	0	DEN	63	55.1	13.1	0.0	3.0	0.0	83.2	0.5	-5.7	0.0	0.0	4.8	0.0	0.0	-11.6
378	426596.12	5410952.85	379.50	0	DEN	125	64.8	13.1	0.0	3.0	0.0	83.2	1.7	1.1	0.0	0.0	3.7	0.0	0.0	-8.7
378	426596.12	5410952.85	379.50	0	DEN	250	64.1	13.1	0.0	3.0	0.0	83.2	4.3	-1.3	0.0	0.0	4.8	0.0	0.0	-10.7
378	426596.12	5410952.85	379.50	0	DEN	500	74.0	13.1	0.0	3.0	0.0	83.2	7.9	-2.7	0.0	0.0	4.8	0.0	0.0	-3.0
378	426596.12	5410952.85	379.50	0	DEN	1000	72.6	13.1	0.0	3.0	0.0	83.2	15.0	-2.7	0.0	0.0	4.8	0.0	0.0	-11.5
378	426596.12	5410952.85	379.50	0	DEN	2000	70.5	13.1	0.0	3.0	0.0	83.2	39.5	-2.7	0.0	0.0	4.8	0.0	0.0	-38.2
378	426596.12	5410952.85	379.50	0	DEN	4000	65.2	13.1	0.0	3.0	0.0	83.2	134.1	-2.7	0.0	0.0	4.8	0.0	0.0	-138.0
378	426596.12	5410952.85	379.50	0	DEN	8000	57.2	13.1	0.0	3.0	0.0	83.2	478.2	-2.7	0.0	0.0	4.8	0.0	0.0	-490.1
379	426596.12	5410952.85	375.50	0	DEN	63	55.1	13.1	0.0	3.0	0.0	83.2	0.5	-5.8	0.0	0.0	4.8	0.0	0.0	-11.5
379	426596.12	5410952.85	375.50	0	DEN	125	64.8	13.1	0.0	3.0	0.0	83.2	1.7	1.0	0.0	0.0	3.7	0.0	0.0	-8.7
379	426596.12	5410952.85	375.50	0	DEN	250	64.1	13.1	0.0	3.0	0.0	83.2	4.3	-1.4	0.0	0.0	4.8	0.0	0.0	-10.6
379	426596.12	5410952.85	375.50	0	DEN	500	74.0	13.1	0.0	3.0	0.0	83.2	7.9	-2.8	0.0	0.0	4.8	0.0	0.0	-3.0
379	426596.12	5410952.85	375.50	0	DEN	1000	72.6	13.1	0.0	3.0	0.0	83.2	15.0	-2.8	0.0	0.0	4.8	0.0	0.0	-11.4
379	426596.12	5410952.85	375.50	0	DEN	2000	70.5	13.1	0.0	3.0	0.0	83.2	39.5	-2.8	0.0	0.0	4.8	0.0	0.0	-38.1
379	426596.12	5410952.85	375.50	0	DEN	4000	65.2	13.1	0.0	3.0	0.0	83.2	134.1	-2.8	0.0	0.0	4.8	0.0	0.0	-137.9
379	426596.12	5410952.85	375.50	0	DEN	8000	57.2	13.1	0.0	3.0	0.0	83.2	478.2	-2.8	0.0	0.0	4.8	0.0	0.0	-490.0
380	426596.12	5410952.85	373.50	0	DEN	63	55.1	13.1	0.0	3.0	0.0	83.2	0.5	-5.8	0.0	0.0	4.8	0.0	0.0	-11.5
380	426596.12	5410952.85	373.50	0	DEN	125	64.8	13.1	0.0	3.0	0.0	83.2	1.7	1.0	0.0	0.0	3.8	0.0	0.0	-8.7
380	426596.12	5410952.85	373.50	0	DEN	250	64.1	13.1	0.0	3.0	0.0	83.2	4.3	-1.5	0.0	0.0	4.8	0.0	0.0	-10.6
380	426596.12	5410952.85	373.50	0	DEN	500	74.0	13.1	0.0	3.0	0.0	83.2	7.9	-2.9	0.0	0.0	4.8	0.0	0.0	-2.9
380	426596.12	5410952.85	373.50	0	DEN	1000	72.6	13.1	0.0	3.0	0.0	83.2	15.0	-2.9	0.0	0.0	4.8	0.0	0.0	-11.4
380	426596.12	5410952.85	373.50	0	DEN	2000	70.5	13.1	0.0	3.0	0.0	83.2	39.5	-2.9	0.0	0.0	4.8	0.0	0.0	-38.0
380	426596.12	5410952.85	373.50	0	DEN	4000	65.2	13.1	0.0	3.0	0.0	83.2	134.1	-2.9	0.0	0.0	4.8	0.0	0.0	-137.9
380	426596.12	5410952.85	373.50	0	DEN	8000	57.2	13.1	0.0	3.0	0.0	83.2	478.2	-2.9	0.0	0.0	4.8	0.0	0.0	-490.0

Point Source, ISO 9613, Name: "AC1", ID: ""																				
Nr.	X	Y	Z	Refl.	DEN	Freq.	Lw	l/a	Optime	K0	Dc	Adiv	Aatm	Agr	Afol	Ahous	Abar	Cmet	RL	Lr
	(m)	(m)	(m)			(Hz)	dB(A)	dB	dB	(dB)	(dB)	(dB)	(dB)	(dB)	(dB)	(dB)	(dB)	(dB)	(dB)	dB(A)
397	421213.68	5411429.46	366.73	0	DEN	500	99.0	0.0	0.0	0.0	0.0	88.7	14.8	-2.1	0.0	0.0	0.0	0.0	0.0	-2.4

Point Source, ISO 9613, Name: "AC4", ID: ""																				
Nr.	X	Y	Z	Refl.	DEN	Freq.	Lw	l/a	Optime	K0	Dc	Adiv	Aatm	Agr	Afol	Ahous	Abar	Cmet	RL	Lr
	(m)	(m)	(m)			(Hz)	dB(A)	dB	dB	(dB)	(dB)	(dB)	(dB)	(dB)	(dB)	(dB)	(dB)	(dB)	(dB)	dB(A)
403	421338.21	5411992.64	372.50	0	DEN	500	99.0	0.0	0.0	0.0	0.0	89.0	15.3	-2.3	0.0	0.0	0.0	0.0	0.0	-2.9

Point Source, ISO 9613, Name: "AC2", ID: ""																				
Nr.	X	Y	Z	Refl.	DEN	Freq.	Lw	l/a	Optime	K0	Dc	Adiv	Aatm	Agr	Afol	Ahous	Abar	Cmet	RL	Lr
	(m)	(m)	(m)			(Hz)	dB(A)	dB	dB	(dB)	(dB)	(dB)	(dB)	(dB)	(dB)	(dB)	(dB)	(dB)	(dB)	dB(A)
410	420461.43	5411544.61	366.60	0	DEN	500	99.0	0.0	0.0	0.0	0.0	89.4	16.1	-2.3	0.0	0.0	0.0	0.0	0.0	-4.2

Line Source, ISO 9613, Name: "WTR_SP", ID: ""																				
Nr.	X	Y	Z	Refl.	DEN	Freq.	Lw	l/a	Optime	K0	Dc	Adiv	Aatm	Agr	Afol	Ahous	Abar	Cmet	RL	Lr
	(m)	(m)	(m)			(Hz)	dB(A)	dB	dB	(dB)	(dB)	(dB)	(dB)	(dB)	(dB)	(dB)	(dB)	(dB)	(dB)	dB(A)
154	425807.01	5409407.94	324.36	0	DEN	32	20.2	26.3	0.0	0.0	0.0	80.4	0.1	-5.7	0.0	0.0	4.8	0.0	0.0	-33.0
154	425807.01	5409407.94	324.36	0	DEN	63	38.7	26.3	0.0	0.0	0.0	80.4	0.4	-5.7	0.0	0.0	4.8	0.0	0.0	-14.8
154	425807.01	5409407.94	324.36	0	DEN	125	54.6	26.3	0.0	0.0	0.0	80.4	1.2	2.2	0.0	0.0	2.6	0.0	0.0	-5.5
154	425807.01	5409407.94	324.36	0	DEN	250	59.5	26.3	0.0	0.0	0.0	80.4	3.1	-0.2	0.0	0.0	4.8	0.0	0.0	-2.2
154	425807.01	5409407.94	324.36	0	DEN	500	62.6	26.3	0.0	0.0	0.0	80.4	5.7	-1.6	0.0	0.0	4.8	0.0	0.0	-0.3
154	425807.01	5409407.94	324.36	0	DEN	1000	68.1	26.3	0.0	0.0	0.0	80.4	10.8	-1.6	0.0	0.0	4.8	0.0	0.0	0.0
154	425807.01	5409407.94	324.36	0	DEN	2000	67.0	26.3	0.0	0.0	0.0	80.4	28.6	-1.6	0.0	0.0	4.9	0.0	0.0	-18.9
154	425807.01	5409407.94	324.36	0	DEN	4000	59.5	26.3	0.0	0.0	0.0	80.4	96.8	-1.6	0.0	0.0	5.0	0.0	0.0	-94.8
154	425807.01	5409407.94	324.36	0	DEN	8000	50.7	26.3	0.0	0.0	0.0	80.4	345.4	-1.6	0.0	0.0	5.3	0.0	0.0	-352.4
181	427615.12	5409653.01	392.39	0	DEN	32	20.2	24.0	0.0	0.0	0.0	79.6	0.1	-5.7	0.0	0.0	0.0	0.0	0.0	-29.8
181	427615.12	5409653.01	392.39	0	DEN	63	38.7	24.0	0.0	0.0	0.0	79.6	0.3	-5.7	0.0	0.0	0.0	0.0	0.0	-11.5
181	427615.12	5409653.01	392.39	0	DEN	125	54.6	24.0	0.0	0.0	0.0	79.6	1.1	1.4	0.0	0.0	0.0	0.0	0.0	-3.6
181	427615.12	5409653.01	392.39	0	DEN	250	59.5	24.0	0.0	0.0	0.0	79.6	2.8	-1.0	0.0	0.0	0.0	0.0	0.0	2.1
181	427615.12	5409653.01	392.39	0	DEN	500	62.6	24.0	0.0	0.0	0.0	79.6	5.2	-2.4	0.0	0.0	0.0	0.0	0.0	4.2
181	427615.12	5409653.01	392.39	0	DEN	1000	68.1	24.0	0.0	0.0	0.0	79.6	9.9	-2.4	0.0	0.0	0.0	0.0	0.0	5.0
181	427615.12	5409653.01	392.39	0	DEN	2000	67.0	24.0	0.0	0.0	0.0	79.6	26.2	-2.4	0.0	0.0	0.0	0.0	0.0	-12.4
181	427615.12	5409653.01	392.39	0	DEN	4000	59.5	24.0	0.0	0.0	0.0	79.6	88.7	-2.4	0.0	0.0	0.0	0.0	0.0	-82.4
181	427615.12	5409653.01	392.39	0	DEN	8000	50.7	24.0	0.0	0.0	0.0	79.6	316.3	-2.4	0.0	0.0	0.0	0.0	0.0	-318.8
190	427128.16	5409763.49	392.48	0	DEN	32	20.2	24.2	0.0	0.0	0.0	80.0	0.1	-5.7	0.0	0.0	0.0	0.0	0.0	-29.9
190	427128.16	5409763.49	392.48	0	DEN	63	38.7	24.2	0.0	0.0	0.0	80.0	0.3	-5.7	0.0	0.0	0.0	0.0	0.0	-11.7
190	427128.16	5409763.49	392.48	0	DEN	125	54.6	24.2	0.0	0.0	0.0	80.0	1.2	1.8	0.0	0.0	0.0	0.0	0.0	-4.1
190	427128.16	5409763.49	392.48	0	DEN	250	59.5	24.2	0.0	0.0	0.0	80.0	3.0	-0.6	0.0	0.0	0.0	0.0	0.0	1.4
190	427128.16	5409763.49	392.48	0	DEN	500	62.6	24.2	0.0	0.0	0.0	80.0	5.5	-2.0	0.0	0.0	0.0	0.0	0.0	3.4
190	427128.16	5409763.49	392.48	0	DEN	1000	68.1	24.2	0.0	0.0	0.0	80.0	10.4	-2.0	0.0	0.0	0.0	0.0	0.0	4.0
190	427128.16	5409763.49	392.48	0	DEN	2000	67.0	24.2	0.0	0.0	0.0	80.0	27.3	-2.0	0.0	0.0	0.0	0.0	0.0	-14.1
190	427128.16	5409763.49	392.48	0	DEN	4000	59.5	24.2	0.0	0.0	0.0	80.0	92.7	-2.0	0.0	0.0	0.0	0.0	0.0	-87.0
190	427128.16	5409763.49	392.48	0	DEN	8000	50.7	24.2	0.0	0.0	0.0	80.0	330.8	-2.0	0.0	0.0	0.0	0.0	0.0	-333.8
222	427802.73	5409569.91	391.86	0	DEN	32	20.2	22.1	0.0	0.0	0.0	79.4	0.1	-5.7	0.0	0.0	0.0	0.0	0.0	-31.5
222	427802.73	5409569.91	391.86	0	DEN	63	38.7	22.1	0.0	0.0	0.0	79.4	0.3	-5.7	0.0	0.0	0.0	0.0	0.0	-13.3
222	427802.73	5409569.91	391.86	0	DEN	125	54.6	22.1	0.0	0.0	0.0	79.4	1.1	2.0	0.0	0.0	0.0	0.0	0.0	-5.8
222	427802.73	5409569.91	391.86	0	DEN	250	59.5	22.1	0.0	0.0	0.0	79.4	2.8	-0.5	0.0	0.0	0.0	0.0	0.0	-0.1
222	427802.73	5409569.91	391.86	0	DEN	500	62.6	22.1	0.0	0.0	0.0	79.4	5.1	-1.8	0.0	0.0	0.0	0.0	0.0	2.0
222	427802.73	5409569.91	391.86	0	DEN	1000	68.1	22.1	0.0	0.0	0.0	79.4	9.7	-1.8	0.0	0.0	0.0	0.0	0.0	2.9
222	427802.73	5409569.91	391.86	0	DEN	2000	67.0	22.1	0.0	0.0	0.0	79.4	25.5	-1.8	0.0	0.0	0.0	0.0	0.0	-14.0
222	427802.73	5409569.91	391.86	0	DEN	4000	59.5	22.1	0.0	0.0	0.0	79.4	86.6	-1.8	0.0	0.0	0.0	0.0	0.0	-82.6
222	427802.73	5409569.91	391.86	0	DEN	8000	50.7	22.1	0.0	0.0	0.0	79.4	308.8	-1.8	0.0	0.0	0.0	0.0	0.0	-313.6
225	426424.04	5409599.48	372.10	0	DEN	32	20.2	22.5	0.0	0.0	0.0	80.1	0.1	-5.7	0.0	0.0	4.8	0.0	0.0	-36.4
225	426424.04	5409599.48	372.10	0	DEN	63	38.7	22.5	0.0	0.0	0.0	80.1	0.3	-5.7	0.0	0.0	4.8	0.0	0.0	-18.2
225	426424.04	5409599.48	372.10	0	DEN	125	54.6	22.5	0.0	0.0	0.0	80.1	1.2	2.0	0.0	0.0	2.7	0.0	0.0	-8.8
225	426424.04	5409599.48	372.10	0	DEN	250	59.5	22.5	0.0	0.0	0.0	80.1	3.0	-0.4	0.0	0.0	4.8	0.0	0.0	-5.3
225	426424.04	5409599.48	372.10	0	DEN	500	62.6	22.5	0.0	0.0	0.0	80.1	5.5	-1.8	0.0	0.0	4.8	0.0	0.0	-3.3
225	426424.04	5409599.48	372.10	0	DEN	1000	68.1	22.5	0.0	0.0	0.0	80.1	10.4	-1.8	0.0	0.0	4.8	0.0	0.0	-2.7
225	426424.04	5409599.48	372.10	0	DEN	2000	67.0	22.5	0.0	0.0	0.0	80.1	27.4	-1.8	0.0	0.0	4.8	0.0	0.0	-20.9
225	426424.04	5409599.48	372.10	0	DEN	4000	59.5	22.5	0.0	0.0	0.0	80.1	93.0	-1.8	0.0	0.0	4.8	0.0	0.0	-94.0
225	426424.04	5409599.48	372.10	0	DEN	8000	50.7	22.5	0.0	0.0	0.0	80.1	331.9	-1.8	0.0	0.0	4.8	0.0	0.0	-341.6
226	426257.93	5409503.31	362.49	0	DEN	32	20.2	22.4	0.0	0.0	0.0	80.0	0.1	-5.7	0.0	0.0	4.8	0.0	0.0	-36.5
226	426257.93	5409503.31	362.49	0	DEN	63	38.7	22.4	0.0	0.0	0.0	80.0	0.3	-5.7	0.0	0.0	4.8	0.0	0.0	-18.3
226	426257.93	5409503.31	362.49	0	DEN	125	54.6	22.4	0.0	0.0	0.0	80.0	1.2	2.3	0.0	0.0	2.5	0.0	0.0	-8.9

Line Source, ISO 9613, Name: "WTR_SP", ID: ""																					
Nr.	X	Y	Z	Refl.	DEN	Freq.	Lw	l/a	Optime	K0	Dc	Adiv	Aatm	Agr	Afol	Ahous	Abar	Cmet	RL	Lr
	(m)	(m)	(m)			(Hz)	dB(A)	dB	dB	(dB)	(dB)	(dB)	(dB)	(dB)	(dB)	(dB)	(dB)	(dB)	(dB)	dB(A)
226	426257.93	5409503.31	362.49	0	DEN	250	59.5	22.4	0.0	0.0	0.0	80.0	2.9	-0.2	0.0	0.0	4.8	0.0	0.0	-5.6
226	426257.93	5409503.31	362.49	0	DEN	500	62.6	22.4	0.0	0.0	0.0	80.0	5.4	-1.5	0.0	0.0	4.8	0.0	0.0	-3.6
226	426257.93	5409503.31	362.49	0	DEN	1000	68.1	22.4	0.0	0.0	0.0	80.0	10.3	-1.5	0.0	0.0	4.8	0.0	0.0	-3.0
226	426257.93	5409503.31	362.49	0	DEN	2000	67.0	22.4	0.0	0.0	0.0	80.0	27.2	-1.5	0.0	0.0	4.8	0.0	0.0	-21.0
226	426257.93	5409503.31	362.49	0	DEN	4000	59.5	22.4	0.0	0.0	0.0	80.0	92.3	-1.5	0.0	0.0	4.8	0.0	0.0	-93.6
226	426257.93	5409503.31	362.49	0	DEN	8000	50.7	22.4	0.0	0.0	0.0	80.0	329.1	-1.5	0.0	0.0	4.8	0.0	0.0	-339.2
228	426728.72	5409640.81	379.00	0	DEN	32	20.2	22.3	0.0	0.0	0.0	79.9	0.1	-5.7	0.0	0.0	4.8	0.0	0.0	-36.5
228	426728.72	5409640.81	379.00	0	DEN	63	38.7	22.3	0.0	0.0	0.0	79.9	0.3	-5.7	0.0	0.0	4.8	0.0	0.0	-18.3
228	426728.72	5409640.81	379.00	0	DEN	125	54.6	22.3	0.0	0.0	0.0	79.9	1.1	1.8	0.0	0.0	3.0	0.0	0.0	-8.9
228	426728.72	5409640.81	379.00	0	DEN	250	59.5	22.3	0.0	0.0	0.0	79.9	2.9	-0.7	0.0	0.0	4.8	0.0	0.0	-5.1
228	426728.72	5409640.81	379.00	0	DEN	500	62.6	22.3	0.0	0.0	0.0	79.9	5.4	-2.1	0.0	0.0	4.8	0.0	0.0	-3.1
228	426728.72	5409640.81	379.00	0	DEN	1000	68.1	22.3	0.0	0.0	0.0	79.9	10.2	-2.1	0.0	0.0	4.9	0.0	0.0	-2.5
228	426728.72	5409640.81	379.00	0	DEN	2000	67.0	22.3	0.0	0.0	0.0	79.9	26.9	-2.1	0.0	0.0	5.0	0.0	0.0	-20.4
228	426728.72	5409640.81	379.00	0	DEN	4000	59.5	22.3	0.0	0.0	0.0	79.9	91.2	-2.1	0.0	0.0	5.1	0.0	0.0	-92.4
228	426728.72	5409640.81	379.00	0	DEN	8000	50.7	22.3	0.0	0.0	0.0	79.9	325.4	-2.1	0.0	0.0	5.5	0.0	0.0	-335.7
234	425501.73	5409457.61	299.91	0	DEN	32	20.2	22.9	0.0	0.0	0.0	81.0	0.1	-5.8	0.0	0.0	5.2	0.0	0.0	-37.4
234	425501.73	5409457.61	299.91	0	DEN	63	38.7	22.9	0.0	0.0	0.0	81.0	0.4	-5.8	0.0	0.0	5.5	0.0	0.0	-19.6
234	425501.73	5409457.61	299.91	0	DEN	125	54.6	22.9	0.0	0.0	0.0	81.0	1.3	2.1	0.0	0.0	4.1	0.0	0.0	-11.0
234	425501.73	5409457.61	299.91	0	DEN	250	59.5	22.9	0.0	0.0	0.0	81.0	3.3	-0.3	0.0	0.0	7.2	0.0	0.0	-8.9
234	425501.73	5409457.61	299.91	0	DEN	500	62.6	22.9	0.0	0.0	0.0	81.0	6.1	-1.7	0.0	0.0	8.8	0.0	0.0	-8.7
234	425501.73	5409457.61	299.91	0	DEN	1000	68.1	22.9	0.0	0.0	0.0	81.0	11.6	-1.7	0.0	0.0	10.9	0.0	0.0	-10.8
234	425501.73	5409457.61	299.91	0	DEN	2000	67.0	22.9	0.0	0.0	0.0	81.0	30.7	-1.7	0.0	0.0	13.3	0.0	0.0	-33.4
234	425501.73	5409457.61	299.91	0	DEN	4000	59.5	22.9	0.0	0.0	0.0	81.0	104.0	-1.7	0.0	0.0	16.0	0.0	0.0	-116.9
234	425501.73	5409457.61	299.91	0	DEN	8000	50.7	22.9	0.0	0.0	0.0	81.0	371.1	-1.7	0.0	0.0	18.9	0.0	0.0	-395.6
253	427438.12	5409740.24	392.57	0	DEN	32	20.2	21.6	0.0	0.0	0.0	79.9	0.1	-5.7	0.0	0.0	4.8	0.0	0.0	-37.2
253	427438.12	5409740.24	392.57	0	DEN	63	38.7	21.6	0.0	0.0	0.0	79.9	0.3	-5.7	0.0	0.0	4.8	0.0	0.0	-19.0
253	427438.12	5409740.24	392.57	0	DEN	125	54.6	21.6	0.0	0.0	0.0	79.9	1.1	1.3	0.0	0.0	3.5	0.0	0.0	-9.6
253	427438.12	5409740.24	392.57	0	DEN	250	59.5	21.6	0.0	0.0	0.0	79.9	2.9	-1.1	0.0	0.0	4.8	0.0	0.0	-5.4
253	427438.12	5409740.24	392.57	0	DEN	500	62.6	21.6	0.0	0.0	0.0	79.9	5.4	-2.5	0.0	0.0	4.8	0.0	0.0	-3.3
253	427438.12	5409740.24	392.57	0	DEN	1000	68.1	21.6	0.0	0.0	0.0	79.9	10.2	-2.5	0.0	0.0	4.8	0.0	0.0	-2.7
253	427438.12	5409740.24	392.57	0	DEN	2000	67.0	21.6	0.0	0.0	0.0	79.9	26.9	-2.5	0.0	0.0	4.8	0.0	0.0	-20.5
253	427438.12	5409740.24	392.57	0	DEN	4000	59.5	21.6	0.0	0.0	0.0	79.9	91.4	-2.5	0.0	0.0	4.8	0.0	0.0	-92.5
253	427438.12	5409740.24	392.57	0	DEN	8000	50.7	21.6	0.0	0.0	0.0	79.9	325.9	-2.5	0.0	0.0	4.8	0.0	0.0	-335.8
255	426581.95	5409592.33	378.07	0	DEN	32	20.2	21.6	0.0	0.0	0.0	79.9	0.1	-5.7	0.0	0.0	0.0	0.0	0.0	-32.4
255	426581.95	5409592.33	378.07	0	DEN	63	38.7	21.6	0.0	0.0	0.0	79.9	0.3	-5.7	0.0	0.0	0.0	0.0	0.0	-14.2
255	426581.95	5409592.33	378.07	0	DEN	125	54.6	21.6	0.0	0.0	0.0	79.9	1.1	3.1	0.0	0.0	0.0	0.0	0.0	-7.9
255	426581.95	5409592.33	378.07	0	DEN	250	59.5	21.6	0.0	0.0	0.0	79.9	2.9	0.3	0.0	0.0	0.0	0.0	0.0	-2.0
255	426581.95	5409592.33	378.07	0	DEN	500	62.6	21.6	0.0	0.0	0.0	79.9	5.4	-1.5	0.0	0.0	0.0	0.0	0.0	0.5
255	426581.95	5409592.33	378.07	0	DEN	1000	68.1	21.6	0.0	0.0	0.0	79.9	10.2	-1.5	0.0	0.0	0.0	0.0	0.0	1.2
255	426581.95	5409592.33	378.07	0	DEN	2000	67.0	21.6	0.0	0.0	0.0	79.9	26.9	-1.5	0.0	0.0	0.0	0.0	0.0	-16.6
255	426581.95	5409592.33	378.07	0	DEN	4000	59.5	21.6	0.0	0.0	0.0	79.9	91.1	-1.5	0.0	0.0	0.0	0.0	0.0	-88.4
255	426581.95	5409592.33	378.07	0	DEN	8000	50.7	21.6	0.0	0.0	0.0	79.9	324.9	-1.5	0.0	0.0	0.0	0.0	0.0	-330.9
273	426082.81	5409381.18	341.86	0	DEN	32	20.2	21.1	0.0	0.0	0.0	79.9	0.1	-5.7	0.0	0.0	4.8	0.0	0.0	-37.7
273	426082.81	5409381.18	341.86	0	DEN	63	38.7	21.1	0.0	0.0	0.0	79.9	0.3	-5.7	0.0	0.0	4.8	0.0	0.0	-19.5
273	426082.81	5409381.18	341.86	0	DEN	125	54.6	21.1	0.0	0.0	0.0	79.9	1.1	2.1	0.0	0.0	2.7	0.0	0.0	-10.1
273	426082.81	5409381.18	341.86	0	DEN	250	59.5	21.1	0.0	0.0	0.0	79.9	2.9	-0.3	0.0	0.0	4.8	0.0	0.0	-6.6
273	426082.81	5409381.18	341.86	0	DEN	500	62.6	21.1	0.0	0.0	0.0	79.9	5.4	-1.7	0.0	0.0	4.8	0.0	0.0	-4.6
273	426082.81	5409381.18	341.86	0	DEN	1000	68.1	21.1	0.0	0.0	0.0	79.9	10.2	-1.7	0.0	0.0	4.8	0.0	0.0	-4.0
273	426082.81	5409381.18	341.86	0	DEN	2000	67.0	21.1	0.0	0.0	0.0	79.9	26.9	-1.7	0.0	0.0	4.9	0.0	0.0	-21.9
273	426082.81	5409381.18	341.86	0	DEN	4000	59.5	21.1	0.0	0.0	0.0	79.9	91.3	-1.7	0.0	0.0	5.0	0.0	0.0	-93.9
273	426082.81	5409381.18	341.86	0	DEN	8000	50.7	21.1	0.0	0.0	0.0	79.9	325.8	-1.7	0.0	0.0	5.2	0.0	0.0	-337.4
311	427314.03	5409783.00	391.51	0	DEN	32	20.2	20.8	0.0	0.0	0.0	80.0	0.1	-5.7	0.0	0.0	4.8	0.0	0.0	-38.2
311	427314.03	5409783.00	391.51	0	DEN	63	38.7	20.8	0.0	0.0	0.0	80.0	0.3	-5.7	0.0	0.0	4.8	0.0	0.0	-19.9
311	427314.03	5409783.00	391.51	0	DEN	125	54.6	20.8	0.0	0.0	0.0	80.0	1.2	1.3	0.0	0.0	3.5	0.0	0.0	-10.6
311	427314.03	5409783.00	391.51	0	DEN	250	59.5	20.8	0.0	0.0	0.0	80.0	3.0	-1.2	0.0	0.0	4.8	0.0	0.0	-6.3
311	427314.03	5409783.00	391.51	0	DEN	500	62.6	20.8	0.0	0.0	0.0	80.0	5.5	-2.6	0.0	0.0	4.8	0.0	0.0	-4.3
311	427314.03	5409783.00	391.51	0	DEN	1000	68.1	20.8	0.0	0.0	0.0	80.0	10.4	-2.6	0.0	0.0	4.8	0.0	0.0	-3.7
311	427314.03	5409783.00	391.51	0	DEN	2000	67.0	20.8	0.0	0.0	0.0	80.0	27.4	-2.6	0.0	0.0	4.8	0.0	0.0	-21.8
311	427314.03	5409783.00	391.51	0	DEN	4000	59.5	20.8	0.0	0.0	0.0	80.0	92.9	-2.6	0.0	0.0	4.8	0.0	0.0	-94.8
311	427314.03	5409783.00	391.51	0	DEN	8000	50.7	20.8	0.0	0.0	0.0	80.0	331.3	-2.6	0.0	0.0	4.8	0.0	0.0	-342.0
318	426858.01	5409696.72	379.92	0	DEN	32	20.2	20.6	0.0	0.0	0.0	80.0	0.1	-5.7	0.0	0.0	0.0	0.0	0.0	-33.5
318	426858.01	5409696.72	379.92	0	DEN	63	38.7	20.6	0.0	0.0	0.0	80.0	0.3	-5.7	0.0	0.0	0.0	0.0	0.0	-15.3
318	426858.01	5409696.72	379.92	0	DEN	125	54.6	20.6	0.0	0.0	0.0	80.0	1.2	1.8	0.0	0.0	0.0	0.0	0.0	-7.7

Line Source, ISO 9613, Name: "WTR_SP", ID: ""																					
Nr.	X	Y	Z	Refl.	DEN	Freq.	Lw	l/a	Optime	K0	Dc	Adiv	Aatm	Agr	Afol	Ahous	Abar	Cmet	RL	Lr
	(m)	(m)	(m)			(Hz)	dB(A)	dB	dB	(dB)	(dB)	(dB)	(dB)	(dB)	(dB)	(dB)	(dB)	(dB)	(dB)	dB(A)
318	426858.01	5409696.72	379.92	0	DEN	250	59.5	20.6	0.0	0.0	0.0	80.0	2.9	-0.7	0.0	0.0	0.0	0.0	0.0	-2.1
318	426858.01	5409696.72	379.92	0	DEN	500	62.6	20.6	0.0	0.0	0.0	80.0	5.4	-2.1	0.0	0.0	0.0	0.0	0.0	-0.1
318	426858.01	5409696.72	379.92	0	DEN	1000	68.1	20.6	0.0	0.0	0.0	80.0	10.3	-2.1	0.0	0.0	0.0	0.0	0.0	0.6
318	426858.01	5409696.72	379.92	0	DEN	2000	67.0	20.6	0.0	0.0	0.0	80.0	27.1	-2.1	0.0	0.0	0.0	0.0	0.0	-17.4
318	426858.01	5409696.72	379.92	0	DEN	4000	59.5	20.6	0.0	0.0	0.0	80.0	92.0	-2.1	0.0	0.0	0.0	0.0	0.0	-89.8
318	426858.01	5409696.72	379.92	0	DEN	8000	50.7	20.6	0.0	0.0	0.0	80.0	328.2	-2.1	0.0	0.0	0.0	0.0	0.0	-334.8
348	426955.72	5409723.27	387.42	0	DEN	32	20.2	19.6	0.0	0.0	0.0	80.0	0.1	-5.7	0.0	0.0	0.0	0.0	0.0	-34.5
348	426955.72	5409723.27	387.42	0	DEN	63	38.7	19.6	0.0	0.0	0.0	80.0	0.3	-5.7	0.0	0.0	0.0	0.0	0.0	-16.3
348	426955.72	5409723.27	387.42	0	DEN	125	54.6	19.6	0.0	0.0	0.0	80.0	1.2	1.8	0.0	0.0	0.0	0.0	0.0	-8.7
348	426955.72	5409723.27	387.42	0	DEN	250	59.5	19.6	0.0	0.0	0.0	80.0	2.9	-0.7	0.0	0.0	0.0	0.0	0.0	-3.1
348	426955.72	5409723.27	387.42	0	DEN	500	62.6	19.6	0.0	0.0	0.0	80.0	5.4	-2.1	0.0	0.0	0.0	0.0	0.0	-1.1
348	426955.72	5409723.27	387.42	0	DEN	1000	68.1	19.6	0.0	0.0	0.0	80.0	10.3	-2.1	0.0	0.0	0.0	0.0	0.0	-0.5
348	426955.72	5409723.27	387.42	0	DEN	2000	67.0	19.6	0.0	0.0	0.0	80.0	27.2	-2.1	0.0	0.0	0.0	0.0	0.0	-18.5
348	426955.72	5409723.27	387.42	0	DEN	4000	59.5	19.6	0.0	0.0	0.0	80.0	92.3	-2.1	0.0	0.0	0.0	0.0	0.0	-91.0
348	426955.72	5409723.27	387.42	0	DEN	8000	50.7	19.6	0.0	0.0	0.0	80.0	329.0	-2.1	0.0	0.0	0.0	0.0	0.0	-336.6
349	426183.22	5409403.17	351.94	0	DEN	32	20.2	19.4	0.0	0.0	0.0	79.8	0.1	-5.7	0.0	0.0	4.8	0.0	0.0	-39.3
349	426183.22	5409403.17	351.94	0	DEN	63	38.7	19.4	0.0	0.0	0.0	79.8	0.3	-5.7	0.0	0.0	4.8	0.0	0.0	-21.1
349	426183.22	5409403.17	351.94	0	DEN	125	54.6	19.4	0.0	0.0	0.0	79.8	1.1	2.1	0.0	0.0	2.7	0.0	0.0	-11.7
349	426183.22	5409403.17	351.94	0	DEN	250	59.5	19.4	0.0	0.0	0.0	79.8	2.9	-0.3	0.0	0.0	4.8	0.0	0.0	-8.3
349	426183.22	5409403.17	351.94	0	DEN	500	62.6	19.4	0.0	0.0	0.0	79.8	5.3	-1.7	0.0	0.0	4.9	0.0	0.0	-6.3
349	426183.22	5409403.17	351.94	0	DEN	1000	68.1	19.4	0.0	0.0	0.0	79.8	10.1	-1.7	0.0	0.0	5.1	0.0	0.0	-5.7
349	426183.22	5409403.17	351.94	0	DEN	2000	67.0	19.4	0.0	0.0	0.0	79.8	26.7	-1.7	0.0	0.0	5.3	0.0	0.0	-23.7
349	426183.22	5409403.17	351.94	0	DEN	4000	59.5	19.4	0.0	0.0	0.0	79.8	90.4	-1.7	0.0	0.0	5.8	0.0	0.0	-95.4
349	426183.22	5409403.17	351.94	0	DEN	8000	50.7	19.4	0.0	0.0	0.0	79.8	322.5	-1.7	0.0	0.0	6.6	0.0	0.0	-337.1
415	426316.48	5409600.28	366.28	0	DEN	32	20.2	17.5	0.0	0.0	0.0	80.2	0.1	-5.7	0.0	0.0	4.8	0.0	0.0	-41.6
415	426316.48	5409600.28	366.28	0	DEN	63	38.7	17.5	0.0	0.0	0.0	80.2	0.4	-5.7	0.0	0.0	4.8	0.0	0.0	-23.4
415	426316.48	5409600.28	366.28	0	DEN	125	54.6	17.5	0.0	0.0	0.0	80.2	1.2	5.0	0.0	0.0	0.0	0.0	0.0	-14.3
415	426316.48	5409600.28	366.28	0	DEN	250	59.5	17.5	0.0	0.0	0.0	80.2	3.0	1.5	0.0	0.0	3.3	0.0	0.0	-11.0
415	426316.48	5409600.28	366.28	0	DEN	500	62.6	17.5	0.0	0.0	0.0	80.2	5.6	-0.9	0.0	0.0	4.8	0.0	0.0	-9.5
415	426316.48	5409600.28	366.28	0	DEN	1000	68.1	17.5	0.0	0.0	0.0	80.2	10.5	-0.9	0.0	0.0	4.8	0.0	0.0	-8.9
415	426316.48	5409600.28	366.28	0	DEN	2000	67.0	17.5	0.0	0.0	0.0	80.2	27.8	-0.9	0.0	0.0	4.8	0.0	0.0	-27.3
415	426316.48	5409600.28	366.28	0	DEN	4000	59.5	17.5	0.0	0.0	0.0	80.2	94.4	-0.9	0.0	0.0	4.8	0.0	0.0	-101.4
415	426316.48	5409600.28	366.28	0	DEN	8000	50.7	17.5	0.0	0.0	0.0	80.2	336.7	-0.9	0.0	0.0	4.8	0.0	0.0	-352.5

Line Source, ISO 9613, Name: "WTR_PAG", ID: ""																					
Nr.	X	Y	Z	Refl.	DEN	Freq.	Lw	l/a	Optime	K0	Dc	Adiv	Aatm	Agr	Afol	Ahous	Abar	Cmet	RL	Lr
	(m)	(m)	(m)			(Hz)	dB(A)	dB	dB	(dB)	(dB)	(dB)	(dB)	(dB)	(dB)	(dB)	(dB)	(dB)	(dB)	dB(A)
155	425801.66	5409408.25	323.64	0	DEN	32	20.2	26.3	0.0	0.0	0.0	80.4	0.1	-5.7	0.0	0.0	4.8	0.0	0.0	-33.0
155	425801.66	5409408.25	323.64	0	DEN	63	38.7	26.3	0.0	0.0	0.0	80.4	0.4	-5.7	0.0	0.0	4.8	0.0	0.0	-14.8
155	425801.66	5409408.25	323.64	0	DEN	125	54.6	26.3	0.0	0.0	0.0	80.4	1.2	2.2	0.0	0.0	2.6	0.0	0.0	-5.5
155	425801.66	5409408.25	323.64	0	DEN	250	59.5	26.3	0.0	0.0	0.0	80.4	3.1	-0.2	0.0	0.0	4.8	0.0	0.0	-2.3
155	425801.66	5409408.25	323.64	0	DEN	500	62.6	26.3	0.0	0.0	0.0	80.4	5.7	-1.6	0.0	0.0	4.8	0.0	0.0	-0.4
155	425801.66	5409408.25	323.64	0	DEN	1000	68.1	26.3	0.0	0.0	0.0	80.4	10.8	-1.6	0.0	0.0	4.9	0.0	0.0	-0.1
155	425801.66	5409408.25	323.64	0	DEN	2000	67.0	26.3	0.0	0.0	0.0	80.4	28.6	-1.6	0.0	0.0	4.9	0.0	0.0	-19.0
155	425801.66	5409408.25	323.64	0	DEN	4000	59.5	26.3	0.0	0.0	0.0	80.4	96.9	-1.6	0.0	0.0	5.1	0.0	0.0	-95.1
155	425801.66	5409408.25	323.64	0	DEN	8000	50.7	26.3	0.0	0.0	0.0	80.4	345.8	-1.6	0.0	0.0	5.4	0.0	0.0	-353.0
184	427130.64	5409764.07	392.31	0	DEN	32	20.2	24.3	0.0	0.0	0.0	80.0	0.1	-5.7	0.0	0.0	0.0	0.0	0.0	-29.8
184	427130.64	5409764.07	392.31	0	DEN	63	38.7	24.3	0.0	0.0	0.0	80.0	0.3	-5.7	0.0	0.0	0.0	0.0	0.0	-11.6
184	427130.64	5409764.07	392.31	0	DEN	125	54.6	24.3	0.0	0.0	0.0	80.0	1.2	1.8	0.0	0.0	0.0	0.0	0.0	-4.0
184	427130.64	5409764.07	392.31	0	DEN	250	59.5	24.3	0.0	0.0	0.0	80.0	3.0	-0.6	0.0	0.0	0.0	0.0	0.0	1.5
184	427130.64	5409764.07	392.31	0	DEN	500	62.6	24.3	0.0	0.0	0.0	80.0	5.5	-2.0	0.0	0.0	0.0	0.0	0.0	3.5
184	427130.64	5409764.07	392.31	0	DEN	1000	68.1	24.3	0.0	0.0	0.0	80.0	10.4	-2.0	0.0	0.0	0.0	0.0	0.0	4.1
184	427130.64	5409764.07	392.31	0	DEN	2000	67.0	24.3	0.0	0.0	0.0	80.0	27.4	-2.0	0.0	0.0	0.0	0.0	0.0	-14.0
184	427130.64	5409764.07	392.31	0	DEN	4000	59.5	24.3	0.0	0.0	0.0	80.0	92.7	-2.0	0.0	0.0	0.0	0.0	0.0	-86.9
184	427130.64	5409764.07	392.31	0	DEN	8000	50.7	24.3	0.0	0.0	0.0	80.0	330.8	-2.0	0.0	0.0	0.0	0.0	0.0	-333.7
193	427661.47	5409915.08	379.87	0	DEN	32	20.2	24.3	0.0	0.0	0.0	80.5	0.1	-5.7	0.0	0.0	4.8	0.0	0.0	-35.0
193	427661.47	5409915.08	379.87	0	DEN	63	38.7	24.3	0.0	0.0	0.0	80.5	0.4	-5.7	0.0	0.0	4.8	0.0	0.0	-16.8
193	427661.47	5409915.08	379.87	0	DEN	125	54.6	24.3	0.0	0.0	0.0	80.5	1.2	1.3	0.0	0.0	3.5	0.0	0.0	-7.5
193	427661.47	5409915.08	379.87	0	DEN	250	59.5	24.3	0.0	0.0	0.0	80.5	3.1	-1.2	0.0	0.0	4.8	0.0	0.0	-3.3
193	427661.47	5409915.08	379.87	0	DEN	500	62.6	24.3	0.0	0.0	0.0	80.5	5.7	-2.5	0.0	0.0	4.8	0.0	0.0	-1.4
193	427661.47	5409915.08	379.87	0	DEN	1000	68.1	24.3	0.0	0.0	0.0	80.5	10.9	-2.5	0.0	0.0	4.8	0.0	0.0	-1.1
193	427661.47	5409915.08	379.87	0	DEN	2000	67.0	24.3	0.0	0.0	0.0	80.5	28.7	-2.5	0.0	0.0	4.8	0.0	0.0	-20.0
193	427661.47	5409915.08	379.87	0	DEN	4000	59.5	24.3	0.0	0.0	0.0	80.5	97.3	-2.5	0.0	0.0	4.8	0.0	0.0	-96.1

Line Source, ISO 9613, Name: "WTR_PAG", ID: ""																					
Nr.	X	Y	Z	Refl.	DEN	Freq.	Lw	l/a	Optime	K0	Dc	Adiv	Aatm	Agr	Afol	Ahous	Abar	Cmet	RL	Lr
	(m)	(m)	(m)			(Hz)	dB(A)	dB	dB	(dB)	(dB)	(dB)	(dB)	(dB)	(dB)	(dB)	(dB)	(dB)	(dB)	dB(A)
193	427661.47	5409915.08	379.87	0	DEN	8000	50.7	24.3	0.0	0.0	0.0	80.5	347.2	-2.5	0.0	0.0	4.8	0.0	0.0	-354.8
217	426731.13	5409642.73	379.00	0	DEN	32	20.2	22.6	0.0	0.0	0.0	79.9	0.1	-5.7	0.0	0.0	4.8	0.0	0.0	-36.2
217	426731.13	5409642.73	379.00	0	DEN	63	38.7	22.6	0.0	0.0	0.0	79.9	0.3	-5.7	0.0	0.0	4.8	0.0	0.0	-18.0
217	426731.13	5409642.73	379.00	0	DEN	125	54.6	22.6	0.0	0.0	0.0	79.9	1.1	1.8	0.0	0.0	3.0	0.0	0.0	-8.6
217	426731.13	5409642.73	379.00	0	DEN	250	59.5	22.6	0.0	0.0	0.0	79.9	2.9	-0.7	0.0	0.0	4.8	0.0	0.0	-4.8
217	426731.13	5409642.73	379.00	0	DEN	500	62.6	22.6	0.0	0.0	0.0	79.9	5.4	-2.1	0.0	0.0	4.8	0.0	0.0	-2.8
217	426731.13	5409642.73	379.00	0	DEN	1000	68.1	22.6	0.0	0.0	0.0	79.9	10.2	-2.1	0.0	0.0	4.9	0.0	0.0	-2.2
217	426731.13	5409642.73	379.00	0	DEN	2000	67.0	22.6	0.0	0.0	0.0	79.9	26.9	-2.1	0.0	0.0	4.9	0.0	0.0	-20.1
217	426731.13	5409642.73	379.00	0	DEN	4000	59.5	22.6	0.0	0.0	0.0	79.9	91.3	-2.1	0.0	0.0	5.1	0.0	0.0	-92.1
217	426731.13	5409642.73	379.00	0	DEN	8000	50.7	22.6	0.0	0.0	0.0	79.9	325.5	-2.1	0.0	0.0	5.4	0.0	0.0	-335.5
220	426423.02	5409600.02	372.09	0	DEN	32	20.2	22.6	0.0	0.0	0.0	80.1	0.1	-5.7	0.0	0.0	4.8	0.0	0.0	-36.4
220	426423.02	5409600.02	372.09	0	DEN	63	38.7	22.6	0.0	0.0	0.0	80.1	0.3	-5.7	0.0	0.0	4.8	0.0	0.0	-18.1
220	426423.02	5409600.02	372.09	0	DEN	125	54.6	22.6	0.0	0.0	0.0	80.1	1.2	2.0	0.0	0.0	2.7	0.0	0.0	-8.8
220	426423.02	5409600.02	372.09	0	DEN	250	59.5	22.6	0.0	0.0	0.0	80.1	3.0	-0.4	0.0	0.0	4.8	0.0	0.0	-5.3
220	426423.02	5409600.02	372.09	0	DEN	500	62.6	22.6	0.0	0.0	0.0	80.1	5.5	-1.8	0.0	0.0	4.8	0.0	0.0	-3.3
220	426423.02	5409600.02	372.09	0	DEN	1000	68.1	22.6	0.0	0.0	0.0	80.1	10.4	-1.8	0.0	0.0	4.8	0.0	0.0	-2.7
220	426423.02	5409600.02	372.09	0	DEN	2000	67.0	22.6	0.0	0.0	0.0	80.1	27.4	-1.8	0.0	0.0	4.8	0.0	0.0	-20.8
220	426423.02	5409600.02	372.09	0	DEN	4000	59.5	22.6	0.0	0.0	0.0	80.1	93.1	-1.8	0.0	0.0	4.8	0.0	0.0	-94.0
220	426423.02	5409600.02	372.09	0	DEN	8000	50.7	22.6	0.0	0.0	0.0	80.1	332.0	-1.8	0.0	0.0	4.8	0.0	0.0	-341.7
223	426257.88	5409501.70	362.21	0	DEN	32	20.2	22.5	0.0	0.0	0.0	80.0	0.1	-5.7	0.0	0.0	4.8	0.0	0.0	-36.4
223	426257.88	5409501.70	362.21	0	DEN	63	38.7	22.5	0.0	0.0	0.0	80.0	0.3	-5.7	0.0	0.0	4.8	0.0	0.0	-18.2
223	426257.88	5409501.70	362.21	0	DEN	125	54.6	22.5	0.0	0.0	0.0	80.0	1.2	2.3	0.0	0.0	2.5	0.0	0.0	-8.8
223	426257.88	5409501.70	362.21	0	DEN	250	59.5	22.5	0.0	0.0	0.0	80.0	2.9	-0.1	0.0	0.0	4.8	0.0	0.0	-5.5
223	426257.88	5409501.70	362.21	0	DEN	500	62.6	22.5	0.0	0.0	0.0	80.0	5.4	-1.5	0.0	0.0	4.8	0.0	0.0	-3.6
223	426257.88	5409501.70	362.21	0	DEN	1000	68.1	22.5	0.0	0.0	0.0	80.0	10.3	-1.5	0.0	0.0	4.8	0.0	0.0	-2.9
223	426257.88	5409501.70	362.21	0	DEN	2000	67.0	22.5	0.0	0.0	0.0	80.0	27.2	-1.5	0.0	0.0	4.8	0.0	0.0	-20.9
223	426257.88	5409501.70	362.21	0	DEN	4000	59.5	22.5	0.0	0.0	0.0	80.0	92.2	-1.5	0.0	0.0	4.8	0.0	0.0	-93.5
223	426257.88	5409501.70	362.21	0	DEN	8000	50.7	22.5	0.0	0.0	0.0	80.0	329.0	-1.5	0.0	0.0	4.8	0.0	0.0	-339.0
239	425499.96	5409458.22	299.79	0	DEN	32	20.2	22.8	0.0	0.0	0.0	81.0	0.1	-5.8	0.0	0.0	5.2	0.0	0.0	-37.5
239	425499.96	5409458.22	299.79	0	DEN	63	38.7	22.8	0.0	0.0	0.0	81.0	0.4	-5.8	0.0	0.0	5.5	0.0	0.0	-19.6
239	425499.96	5409458.22	299.79	0	DEN	125	54.6	22.8	0.0	0.0	0.0	81.0	1.3	2.2	0.0	0.0	4.0	0.0	0.0	-11.1
239	425499.96	5409458.22	299.79	0	DEN	250	59.5	22.8	0.0	0.0	0.0	81.0	3.3	-0.3	0.0	0.0	7.2	0.0	0.0	-8.9
239	425499.96	5409458.22	299.79	0	DEN	500	62.6	22.8	0.0	0.0	0.0	81.0	6.1	-1.7	0.0	0.0	8.8	0.0	0.0	-8.8
239	425499.96	5409458.22	299.79	0	DEN	1000	68.1	22.8	0.0	0.0	0.0	81.0	11.6	-1.7	0.0	0.0	10.8	0.0	0.0	-10.8
239	425499.96	5409458.22	299.79	0	DEN	2000	67.0	22.8	0.0	0.0	0.0	81.0	30.7	-1.7	0.0	0.0	13.2	0.0	0.0	-33.4
239	425499.96	5409458.22	299.79	0	DEN	4000	59.5	22.8	0.0	0.0	0.0	81.0	104.1	-1.7	0.0	0.0	15.9	0.0	0.0	-117.0
239	425499.96	5409458.22	299.79	0	DEN	8000	50.7	22.8	0.0	0.0	0.0	81.0	371.2	-1.7	0.0	0.0	18.8	0.0	0.0	-395.8
246	427882.07	5409955.49	378.12	0	DEN	32	20.2	22.5	0.0	0.0	0.0	80.6	0.1	-5.7	0.0	0.0	4.8	0.0	0.0	-37.1
246	427882.07	5409955.49	378.12	0	DEN	63	38.7	22.5	0.0	0.0	0.0	80.6	0.4	-5.7	0.0	0.0	4.8	0.0	0.0	-18.8
246	427882.07	5409955.49	378.12	0	DEN	125	54.6	22.5	0.0	0.0	0.0	80.6	1.2	1.6	0.0	0.0	3.1	0.0	0.0	-9.6
246	427882.07	5409955.49	378.12	0	DEN	250	59.5	22.5	0.0	0.0	0.0	80.6	3.2	-0.8	0.0	0.0	4.8	0.0	0.0	-5.8
246	427882.07	5409955.49	378.12	0	DEN	500	62.6	22.5	0.0	0.0	0.0	80.6	5.9	-2.2	0.0	0.0	4.8	0.0	0.0	-4.0
246	427882.07	5409955.49	378.12	0	DEN	1000	68.1	22.5	0.0	0.0	0.0	80.6	11.1	-2.2	0.0	0.0	4.8	0.0	0.0	-3.7
246	427882.07	5409955.49	378.12	0	DEN	2000	67.0	22.5	0.0	0.0	0.0	80.6	29.3	-2.2	0.0	0.0	4.8	0.0	0.0	-23.0
246	427882.07	5409955.49	378.12	0	DEN	4000	59.5	22.5	0.0	0.0	0.0	80.6	99.4	-2.2	0.0	0.0	4.8	0.0	0.0	-100.7
246	427882.07	5409955.49	378.12	0	DEN	8000	50.7	22.5	0.0	0.0	0.0	80.6	354.7	-2.2	0.0	0.0	4.8	0.0	0.0	-364.7
257	426080.39	5409381.88	341.58	0	DEN	32	20.2	21.4	0.0	0.0	0.0	79.9	0.1	-5.7	0.0	0.0	4.8	0.0	0.0	-37.4
257	426080.39	5409381.88	341.58	0	DEN	63	38.7	21.4	0.0	0.0	0.0	79.9	0.3	-5.7	0.0	0.0	4.8	0.0	0.0	-19.1
257	426080.39	5409381.88	341.58	0	DEN	125	54.6	21.4	0.0	0.0	0.0	79.9	1.1	2.1	0.0	0.0	2.6	0.0	0.0	-9.8
257	426080.39	5409381.88	341.58	0	DEN	250	59.5	21.4	0.0	0.0	0.0	79.9	2.9	-0.3	0.0	0.0	4.8	0.0	0.0	-6.3
257	426080.39	5409381.88	341.58	0	DEN	500	62.6	21.4	0.0	0.0	0.0	79.9	5.4	-1.7	0.0	0.0	4.8	0.0	0.0	-4.3
257	426080.39	5409381.88	341.58	0	DEN	1000	68.1	21.4	0.0	0.0	0.0	79.9	10.2	-1.7	0.0	0.0	4.8	0.0	0.0	-3.7
257	426080.39	5409381.88	341.58	0	DEN	2000	67.0	21.4	0.0	0.0	0.0	79.9	27.0	-1.7	0.0	0.0	4.9	0.0	0.0	-21.6
257	426080.39	5409381.88	341.58	0	DEN	4000	59.5	21.4	0.0	0.0	0.0	79.9	91.4	-1.7	0.0	0.0	5.0	0.0	0.0	-93.6
257	426080.39	5409381.88	341.58	0	DEN	8000	50.7	21.4	0.0	0.0	0.0	79.9	326.0	-1.7	0.0	0.0	5.2	0.0	0.0	-337.2
259	426580.65	5409592.39	378.09	0	DEN	32	20.2	21.5	0.0	0.0	0.0	79.9	0.1	-5.7	0.0	0.0	0.0	0.0	0.0	-32.6
259	426580.65	5409592.39	378.09	0	DEN	63	38.7	21.5	0.0	0.0	0.0	79.9	0.3	-5.7	0.0	0.0	0.0	0.0	0.0	-14.3
259	426580.65	5409592.39	378.09	0	DEN	125	54.6	21.5	0.0	0.0	0.0	79.9	1.1	4.1	0.0	0.0	0.0	0.0	0.0	-9.0
259	426580.65	5409592.39	378.09	0	DEN	250	59.5	21.5	0.0	0.0	0.0	79.9	2.9	0.9	0.0	0.0	0.0	0.0	0.0	-2.7
259	426580.65	5409592.39	378.09	0	DEN	500	62.6	21.5	0.0	0.0	0.0	79.9	5.4	-1.2	0.0	0.0	0.0	0.0	0.0	0.1
259	426580.65	5409592.39	378.09	0	DEN	1000	68.1	21.5	0.0	0.0	0.0	79.9	10.2	-1.2	0.0	0.0	0.0	0.0	0.0	0.8
259	426580.65	5409592.39	378.09	0	DEN	2000	67.0	21.5	0.0	0.0	0.0	79.9	26.9	-1.2	0.0	0.0	0.0	0.0	0.0	-17.0
259	426580.65	5409592.39	378.09	0	DEN	4000	59.5	21.5	0.0	0.0	0.0	79.9	91.1	-1.2	0.0	0.0	0.0	0.0	0.0	-88.7

Line Source, ISO 9613, Name: "WTR_PAG", ID: ""																				
Nr.	X	Y	Z	Refl.	DEN	Freq.	Lw	l/a	Optime	K0	Dc	Adiv	Aatm	Agr	Afol	Ahous	Abar	Cmet	RL	Lr
	(m)	(m)	(m)			(Hz)	dB(A)	dB	dB	(dB)	(dB)	(dB)	(dB)	(dB)	(dB)	(dB)	(dB)	(dB)	(dB)	dB(A)
259	426580.65	5409592.39	378.09	0	DEN	8000	50.7	21.5	0.0	0.0	0.0	79.9	324.9	-1.2	0.0	0.0	0.0	0.0	0.0	-331.4
264	427334.09	5409814.00	388.41	0	DEN	32	20.2	21.7	0.0	0.0	0.0	80.1	0.1	-5.7	0.0	0.0	4.8	0.0	0.0	-37.4
264	427334.09	5409814.00	388.41	0	DEN	63	38.7	21.7	0.0	0.0	0.0	80.1	0.3	-5.7	0.0	0.0	4.8	0.0	0.0	-19.1
264	427334.09	5409814.00	388.41	0	DEN	125	54.6	21.7	0.0	0.0	0.0	80.1	1.2	1.2	0.0	0.0	3.6	0.0	0.0	-9.8
264	427334.09	5409814.00	388.41	0	DEN	250	59.5	21.7	0.0	0.0	0.0	80.1	3.0	-1.2	0.0	0.0	4.8	0.0	0.0	-5.4
264	427334.09	5409814.00	388.41	0	DEN	500	62.6	21.7	0.0	0.0	0.0	80.1	5.5	-2.6	0.0	0.0	4.8	0.0	0.0	-3.5
264	427334.09	5409814.00	388.41	0	DEN	1000	68.1	21.7	0.0	0.0	0.0	80.1	10.5	-2.6	0.0	0.0	4.8	0.0	0.0	-2.9
264	427334.09	5409814.00	388.41	0	DEN	2000	67.0	21.7	0.0	0.0	0.0	80.1	27.7	-2.6	0.0	0.0	4.8	0.0	0.0	-21.2
264	427334.09	5409814.00	388.41	0	DEN	4000	59.5	21.7	0.0	0.0	0.0	80.1	93.9	-2.6	0.0	0.0	4.8	0.0	0.0	-94.9
264	427334.09	5409814.00	388.41	0	DEN	8000	50.7	21.7	0.0	0.0	0.0	80.1	334.8	-2.6	0.0	0.0	4.8	0.0	0.0	-344.7
332	426860.96	5409699.37	379.78	0	DEN	32	20.2	20.1	0.0	0.0	0.0	80.0	0.1	-5.7	0.0	0.0	0.0	0.0	0.0	-34.0
332	426860.96	5409699.37	379.78	0	DEN	63	38.7	20.1	0.0	0.0	0.0	80.0	0.3	-5.7	0.0	0.0	0.0	0.0	0.0	-15.7
332	426860.96	5409699.37	379.78	0	DEN	125	54.6	20.1	0.0	0.0	0.0	80.0	1.2	1.7	0.0	0.0	0.0	0.0	0.0	-8.1
332	426860.96	5409699.37	379.78	0	DEN	250	59.5	20.1	0.0	0.0	0.0	80.0	2.9	-0.7	0.0	0.0	0.0	0.0	0.0	-2.5
332	426860.96	5409699.37	379.78	0	DEN	500	62.6	20.1	0.0	0.0	0.0	80.0	5.4	-2.1	0.0	0.0	0.0	0.0	0.0	-0.5
332	426860.96	5409699.37	379.78	0	DEN	1000	68.1	20.1	0.0	0.0	0.0	80.0	10.3	-2.1	0.0	0.0	0.0	0.0	0.0	0.1
332	426860.96	5409699.37	379.78	0	DEN	2000	67.0	20.1	0.0	0.0	0.0	80.0	27.2	-2.1	0.0	0.0	0.0	0.0	0.0	-17.8
332	426860.96	5409699.37	379.78	0	DEN	4000	59.5	20.1	0.0	0.0	0.0	80.0	92.1	-2.1	0.0	0.0	0.0	0.0	0.0	-90.3
332	426860.96	5409699.37	379.78	0	DEN	8000	50.7	20.1	0.0	0.0	0.0	80.0	328.4	-2.1	0.0	0.0	0.0	0.0	0.0	-335.4
343	426954.21	5409723.21	387.28	0	DEN	32	20.2	19.6	0.0	0.0	0.0	80.0	0.1	-5.7	0.0	0.0	0.0	0.0	0.0	-34.5
343	426954.21	5409723.21	387.28	0	DEN	63	38.7	19.6	0.0	0.0	0.0	80.0	0.3	-5.7	0.0	0.0	0.0	0.0	0.0	-16.2
343	426954.21	5409723.21	387.28	0	DEN	125	54.6	19.6	0.0	0.0	0.0	80.0	1.2	1.8	0.0	0.0	0.0	0.0	0.0	-8.6
343	426954.21	5409723.21	387.28	0	DEN	250	59.5	19.6	0.0	0.0	0.0	80.0	2.9	-0.7	0.0	0.0	0.0	0.0	0.0	-3.1
343	426954.21	5409723.21	387.28	0	DEN	500	62.6	19.6	0.0	0.0	0.0	80.0	5.4	-2.1	0.0	0.0	0.0	0.0	0.0	-1.1
343	426954.21	5409723.21	387.28	0	DEN	1000	68.1	19.6	0.0	0.0	0.0	80.0	10.3	-2.1	0.0	0.0	0.0	0.0	0.0	-0.4
343	426954.21	5409723.21	387.28	0	DEN	2000	67.0	19.6	0.0	0.0	0.0	80.0	27.2	-2.1	0.0	0.0	0.0	0.0	0.0	-18.5
343	426954.21	5409723.21	387.28	0	DEN	4000	59.5	19.6	0.0	0.0	0.0	80.0	92.3	-2.1	0.0	0.0	0.0	0.0	0.0	-91.0
343	426954.21	5409723.21	387.28	0	DEN	8000	50.7	19.6	0.0	0.0	0.0	80.0	329.1	-2.1	0.0	0.0	0.0	0.0	0.0	-336.6
360	426184.20	5409402.91	351.81	0	DEN	32	20.2	19.1	0.0	0.0	0.0	79.8	0.1	-5.7	0.0	0.0	4.8	0.0	0.0	-39.6
360	426184.20	5409402.91	351.81	0	DEN	63	38.7	19.1	0.0	0.0	0.0	79.8	0.3	-5.7	0.0	0.0	4.8	0.0	0.0	-21.4
360	426184.20	5409402.91	351.81	0	DEN	125	54.6	19.1	0.0	0.0	0.0	79.8	1.1	2.1	0.0	0.0	2.7	0.0	0.0	-12.1
360	426184.20	5409402.91	351.81	0	DEN	250	59.5	19.1	0.0	0.0	0.0	79.8	2.9	-0.3	0.0	0.0	4.9	0.0	0.0	-8.6
360	426184.20	5409402.91	351.81	0	DEN	500	62.6	19.1	0.0	0.0	0.0	79.8	5.3	-1.7	0.0	0.0	5.0	0.0	0.0	-6.7
360	426184.20	5409402.91	351.81	0	DEN	1000	68.1	19.1	0.0	0.0	0.0	79.8	10.1	-1.7	0.0	0.0	5.1	0.0	0.0	-6.1
360	426184.20	5409402.91	351.81	0	DEN	2000	67.0	19.1	0.0	0.0	0.0	79.8	26.7	-1.7	0.0	0.0	5.5	0.0	0.0	-24.1
360	426184.20	5409402.91	351.81	0	DEN	4000	59.5	19.1	0.0	0.0	0.0	79.8	90.4	-1.7	0.0	0.0	6.1	0.0	0.0	-96.0
360	426184.20	5409402.91	351.81	0	DEN	8000	50.7	19.1	0.0	0.0	0.0	79.8	322.4	-1.7	0.0	0.0	7.1	0.0	0.0	-337.8
387	427439.26	5409849.90	384.38	0	DEN	32	20.2	18.9	0.0	0.0	0.0	80.2	0.1	-5.7	0.0	0.0	4.8	0.0	0.0	-40.2
387	427439.26	5409849.90	384.38	0	DEN	63	38.7	18.9	0.0	0.0	0.0	80.2	0.4	-5.7	0.0	0.0	4.8	0.0	0.0	-21.9
387	427439.26	5409849.90	384.38	0	DEN	125	54.6	18.9	0.0	0.0	0.0	80.2	1.2	1.2	0.0	0.0	3.5	0.0	0.0	-12.6
387	427439.26	5409849.90	384.38	0	DEN	250	59.5	18.9	0.0	0.0	0.0	80.2	3.0	-1.2	0.0	0.0	4.8	0.0	0.0	-8.3
387	427439.26	5409849.90	384.38	0	DEN	500	62.6	18.9	0.0	0.0	0.0	80.2	5.6	-2.6	0.0	0.0	4.8	0.0	0.0	-6.4
387	427439.26	5409849.90	384.38	0	DEN	1000	68.1	18.9	0.0	0.0	0.0	80.2	10.6	-2.6	0.0	0.0	4.8	0.0	0.0	-5.9
387	427439.26	5409849.90	384.38	0	DEN	2000	67.0	18.9	0.0	0.0	0.0	80.2	28.0	-2.6	0.0	0.0	4.8	0.0	0.0	-24.4
387	427439.26	5409849.90	384.38	0	DEN	4000	59.5	18.9	0.0	0.0	0.0	80.2	95.0	-2.6	0.0	0.0	4.8	0.0	0.0	-98.9
387	427439.26	5409849.90	384.38	0	DEN	8000	50.7	18.9	0.0	0.0	0.0	80.2	338.7	-2.6	0.0	0.0	4.8	0.0	0.0	-351.5
413	427500.05	5409880.48	381.02	0	DEN	32	20.2	17.7	0.0	0.0	0.0	80.3	0.1	-5.7	0.0	0.0	4.8	0.0	0.0	-41.5
413	427500.05	5409880.48	381.02	0	DEN	63	38.7	17.7	0.0	0.0	0.0	80.3	0.4	-5.7	0.0	0.0	4.8	0.0	0.0	-23.3
413	427500.05	5409880.48	381.02	0	DEN	125	54.6	17.7	0.0	0.0	0.0	80.3	1.2	1.2	0.0	0.0	3.5	0.0	0.0	-14.0
413	427500.05	5409880.48	381.02	0	DEN	250	59.5	17.7	0.0	0.0	0.0	80.3	3.1	-1.2	0.0	0.0	4.8	0.0	0.0	-9.7
413	427500.05	5409880.48	381.02	0	DEN	500	62.6	17.7	0.0	0.0	0.0	80.3	5.6	-2.6	0.0	0.0	4.8	0.0	0.0	-7.8
413	427500.05	5409880.48	381.02	0	DEN	1000	68.1	17.7	0.0	0.0	0.0	80.3	10.7	-2.6	0.0	0.0	4.8	0.0	0.0	-7.4
413	427500.05	5409880.48	381.02	0	DEN	2000	67.0	17.7	0.0	0.0	0.0	80.3	28.3	-2.6	0.0	0.0	4.8	0.0	0.0	-26.1
413	427500.05	5409880.48	381.02	0	DEN	4000	59.5	17.7	0.0	0.0	0.0	80.3	96.0	-2.6	0.0	0.0	4.8	0.0	0.0	-101.3
413	427500.05	5409880.48	381.02	0	DEN	8000	50.7	17.7	0.0	0.0	0.0	80.3	342.3	-2.6	0.0	0.0	4.8	0.0	0.0	-356.4
418	426315.73	5409599.88	366.27	0	DEN	32	20.2	17.3	0.0	0.0	0.0	80.2	0.1	-5.7	0.0	0.0	4.8	0.0	0.0	-41.8
418	426315.73	5409599.88	366.27	0	DEN	63	38.7	17.3	0.0	0.0	0.0	80.2	0.4	-5.7	0.0	0.0	4.8	0.0	0.0	-23.5
418	426315.73	5409599.88	366.27	0	DEN	125	54.6	17.3	0.0	0.0	0.0	80.2	1.2	5.0	0.0	0.0	0.0	0.0	0.0	-14.4
418	426315.73	5409599.88	366.27	0	DEN	250	59.5	17.3	0.0	0.0	0.0	80.2	3.0	1.5	0.0	0.0	3.2	0.0	0.0	-11.1
418	426315.73	5409599.88	366.27	0	DEN	500	62.6	17.3	0.0	0.0	0.0	80.2	5.6	-0.9	0.0	0.0	4.8	0.0	0.0	-9.6
418	426315.73	5409599.88	366.27	0	DEN	1000	68.1	17.3	0.0	0.0	0.0	80.2	10.5	-0.9	0.0	0.0	4.8	0.0	0.0	-9.1
418	426315.73	5409599.88	366.27	0	DEN	2000	67.0	17.3	0.0	0.0	0.0	80.2	27.8	-0.9	0.0	0.0	4.8	0.0	0.0	-27.5
418	426315.73	5409599.88	366.27	0	DEN	4000	59.5	17.3	0.0	0.0	0.0	80.2	94.4	-0.9	0.0	0.0	4.8	0.0	0.0	-101.6

Line Source, ISO 9613, Name: "WTR_PAG", ID: ""																				
Nr.	X	Y	Z	Refl.	DEN	Freq.	Lw	l/a	Optime	K0	Dc	Adiv	Aatm	Agr	Afol	Ahous	Abar	Cmet	RL	Lr
	(m)	(m)	(m)			(Hz)	dB(A)	dB	dB	(dB)	(dB)	(dB)	(dB)	(dB)	(dB)	(dB)	(dB)	(dB)	(dB)	dB(A)
418	426315.73	5409599.88	366.27	0	DEN	8000	50.7	17.3	0.0	0.0	0.0	80.2	336.7	-0.9	0.0	0.0	4.8	0.0	0.0	-352.7

Line Source, ISO 9613, Name: "TRL_OP-TMA", ID: ""																				
Nr.	X	Y	Z	Refl.	DEN	Freq.	Lw	l/a	Optime	K0	Dc	Adiv	Aatm	Agr	Afol	Ahous	Abar	Cmet	RL	Lr
	(m)	(m)	(m)			(Hz)	dB(A)	dB	dB	(dB)	(dB)	(dB)	(dB)	(dB)	(dB)	(dB)	(dB)	(dB)	(dB)	dB(A)
107	424882.86	5409587.72	350.54	0	DEN	32	39.6	26.3	0.0	0.0	0.0	82.3	0.1	-5.8	0.0	0.0	4.8	0.0	0.0	-15.4
107	424882.86	5409587.72	350.54	0	DEN	63	62.0	26.3	0.0	0.0	0.0	82.3	0.4	-5.8	0.0	0.0	4.8	0.0	0.0	6.6
107	424882.86	5409587.72	350.54	0	DEN	125	75.3	26.3	0.0	0.0	0.0	82.3	1.5	2.2	0.0	0.0	2.6	0.0	0.0	13.1
107	424882.86	5409587.72	350.54	0	DEN	250	69.5	26.3	0.0	0.0	0.0	82.3	3.8	-0.3	0.0	0.0	4.8	0.0	0.0	5.2
107	424882.86	5409587.72	350.54	0	DEN	500	69.4	26.3	0.0	0.0	0.0	82.3	7.1	-1.7	0.0	0.0	4.8	0.0	0.0	3.3
107	424882.86	5409587.72	350.54	0	DEN	1000	66.5	26.3	0.0	0.0	0.0	82.3	13.5	-1.7	0.0	0.0	4.8	0.0	0.0	-6.0
107	424882.86	5409587.72	350.54	0	DEN	2000	62.8	26.3	0.0	0.0	0.0	82.3	35.6	-1.7	0.0	0.0	4.8	0.0	0.0	-31.8
107	424882.86	5409587.72	350.54	0	DEN	4000	58.4	26.3	0.0	0.0	0.0	82.3	120.6	-1.7	0.0	0.0	4.8	0.0	0.0	-121.2
107	424882.86	5409587.72	350.54	0	DEN	8000	52.6	26.3	0.0	0.0	0.0	82.3	430.0	-1.7	0.0	0.0	4.8	0.0	0.0	-436.5
109	425584.45	5409336.16	338.66	0	DEN	32	39.6	24.7	0.0	0.0	0.0	80.6	0.1	-5.7	0.0	0.0	4.8	0.0	0.0	-15.4
109	425584.45	5409336.16	338.66	0	DEN	63	62.0	24.7	0.0	0.0	0.0	80.6	0.4	-5.7	0.0	0.0	4.8	0.0	0.0	6.7
109	425584.45	5409336.16	338.66	0	DEN	125	75.3	24.7	0.0	0.0	0.0	80.6	1.2	2.3	0.0	0.0	2.5	0.0	0.0	13.4
109	425584.45	5409336.16	338.66	0	DEN	250	69.5	24.7	0.0	0.0	0.0	80.6	3.2	-0.2	0.0	0.0	4.8	0.0	0.0	5.9
109	425584.45	5409336.16	338.66	0	DEN	500	69.4	24.7	0.0	0.0	0.0	80.6	5.8	-1.6	0.0	0.0	4.8	0.0	0.0	4.5
109	425584.45	5409336.16	338.66	0	DEN	1000	66.5	24.7	0.0	0.0	0.0	80.6	11.1	-1.6	0.0	0.0	4.8	0.0	0.0	-3.6
109	425584.45	5409336.16	338.66	0	DEN	2000	62.8	24.7	0.0	0.0	0.0	80.6	29.3	-1.6	0.0	0.0	4.8	0.0	0.0	-25.5
109	425584.45	5409336.16	338.66	0	DEN	4000	58.4	24.7	0.0	0.0	0.0	80.6	99.2	-1.6	0.0	0.0	4.8	0.0	0.0	-99.9
109	425584.45	5409336.16	338.66	0	DEN	8000	52.6	24.7	0.0	0.0	0.0	80.6	353.8	-1.6	0.0	0.0	4.8	0.0	0.0	-360.4
112	424344.42	5410176.96	360.56	0	DEN	32	39.6	27.6	0.0	0.0	0.0	84.0	0.1	-5.8	0.0	0.0	0.0	0.0	0.0	-11.1
112	424344.42	5410176.96	360.56	0	DEN	63	62.0	27.6	0.0	0.0	0.0	84.0	0.5	-5.8	0.0	0.0	0.0	0.0	0.0	10.9
112	424344.42	5410176.96	360.56	0	DEN	125	75.3	27.6	0.0	0.0	0.0	84.0	1.8	1.7	0.0	0.0	0.0	0.0	0.0	15.5
112	424344.42	5410176.96	360.56	0	DEN	250	69.5	27.6	0.0	0.0	0.0	84.0	4.7	-0.8	0.0	0.0	0.0	0.0	0.0	9.3
112	424344.42	5410176.96	360.56	0	DEN	500	69.4	27.6	0.0	0.0	0.0	84.0	8.6	-2.2	0.0	0.0	0.0	0.0	0.0	6.6
112	424344.42	5410176.96	360.56	0	DEN	1000	66.5	27.6	0.0	0.0	0.0	84.0	16.4	-2.2	0.0	0.0	0.0	0.0	0.0	-4.0
112	424344.42	5410176.96	360.56	0	DEN	2000	62.8	27.6	0.0	0.0	0.0	84.0	43.3	-2.2	0.0	0.0	0.0	0.0	0.0	-34.6
112	424344.42	5410176.96	360.56	0	DEN	4000	58.4	27.6	0.0	0.0	0.0	84.0	146.7	-2.2	0.0	0.0	0.0	0.0	0.0	-142.5
112	424344.42	5410176.96	360.56	0	DEN	8000	52.6	27.6	0.0	0.0	0.0	84.0	523.3	-2.2	0.0	0.0	0.0	0.0	0.0	-524.9
121	425299.74	5409343.89	349.02	0	DEN	32	39.6	24.5	0.0	0.0	0.0	81.1	0.1	-5.8	0.0	0.0	4.8	0.0	0.0	-16.2
121	425299.74	5409343.89	349.02	0	DEN	63	62.0	24.5	0.0	0.0	0.0	81.1	0.4	-5.8	0.0	0.0	4.8	0.0	0.0	6.0
121	425299.74	5409343.89	349.02	0	DEN	125	75.3	24.5	0.0	0.0	0.0	81.1	1.3	4.7	0.0	0.0	0.1	0.0	0.0	12.6
121	425299.74	5409343.89	349.02	0	DEN	250	69.5	24.5	0.0	0.0	0.0	81.1	3.4	1.4	0.0	0.0	3.4	0.0	0.0	4.7
121	425299.74	5409343.89	349.02	0	DEN	500	69.4	24.5	0.0	0.0	0.0	81.1	6.2	-0.9	0.0	0.0	4.8	0.0	0.0	2.6
121	425299.74	5409343.89	349.02	0	DEN	1000	66.5	24.5	0.0	0.0	0.0	81.1	11.8	-0.9	0.0	0.0	4.8	0.0	0.0	-5.8
121	425299.74	5409343.89	349.02	0	DEN	2000	62.8	24.5	0.0	0.0	0.0	81.1	31.1	-0.9	0.0	0.0	4.8	0.0	0.0	-28.8
121	425299.74	5409343.89	349.02	0	DEN	4000	58.4	24.5	0.0	0.0	0.0	81.1	105.4	-0.9	0.0	0.0	4.8	0.0	0.0	-107.6
121	425299.74	5409343.89	349.02	0	DEN	8000	52.6	24.5	0.0	0.0	0.0	81.1	375.9	-0.9	0.0	0.0	4.8	0.0	0.0	-383.9
125	425705.23	5409422.07	317.83	0	DEN	32	39.6	23.6	0.0	0.0	0.0	80.6	0.1	-5.7	0.0	0.0	4.8	0.0	0.0	-16.5
125	425705.23	5409422.07	317.83	0	DEN	63	62.0	23.6	0.0	0.0	0.0	80.6	0.4	-5.7	0.0	0.0	4.8	0.0	0.0	5.6
125	425705.23	5409422.07	317.83	0	DEN	125	75.3	23.6	0.0	0.0	0.0	80.6	1.2	2.2	0.0	0.0	2.6	0.0	0.0	12.3
125	425705.23	5409422.07	317.83	0	DEN	250	69.5	23.6	0.0	0.0	0.0	80.6	3.2	-0.3	0.0	0.0	4.9	0.0	0.0	4.8
125	425705.23	5409422.07	317.83	0	DEN	500	69.4	23.6	0.0	0.0	0.0	80.6	5.8	-1.6	0.0	0.0	4.9	0.0	0.0	3.3
125	425705.23	5409422.07	317.83	0	DEN	1000	66.5	23.6	0.0	0.0	0.0	80.6	11.1	-1.6	0.0	0.0	5.1	0.0	0.0	-5.0
125	425705.23	5409422.07	317.83	0	DEN	2000	62.8	23.6	0.0	0.0	0.0	80.6	29.2	-1.6	0.0	0.0	5.4	0.0	0.0	-27.2
125	425705.23	5409422.07	317.83	0	DEN	4000	58.4	23.6	0.0	0.0	0.0	80.6	99.1	-1.6	0.0	0.0	5.9	0.0	0.0	-102.0
125	425705.23	5409422.07	317.83	0	DEN	8000	52.6	23.6	0.0	0.0	0.0	80.6	353.5	-1.6	0.0	0.0	6.8	0.0	0.0	-363.1
142	425499.98	5409457.87	299.87	0	DEN	32	39.6	22.8	0.0	0.0	0.0	81.0	0.1	-5.8	0.0	0.0	5.2	0.0	0.0	-18.1
142	425499.98	5409457.87	299.87	0	DEN	63	62.0	22.8	0.0	0.0	0.0	81.0	0.4	-5.8	0.0	0.0	5.5	0.0	0.0	3.7
142	425499.98	5409457.87	299.87	0	DEN	125	75.3	22.8	0.0	0.0	0.0	81.0	1.3	2.2	0.0	0.0	4.0	0.0	0.0	9.6
142	425499.98	5409457.87	299.87	0	DEN	250	69.5	22.8	0.0	0.0	0.0	81.0	3.3	-0.3	0.0	0.0	7.2	0.0	0.0	1.1
142	425499.98	5409457.87	299.87	0	DEN	500	69.4	22.8	0.0	0.0	0.0	81.0	6.1	-1.7	0.0	0.0	8.8	0.0	0.0	-2.0
142	425499.98	5409457.87	299.87	0	DEN	1000	66.5	22.8	0.0	0.0	0.0	81.0	11.6	-1.7	0.0	0.0	10.8	0.0	0.0	-12.4
142	425499.98	5409457.87	299.87	0	DEN	2000	62.8	22.8	0.0	0.0	0.0	81.0	30.7	-1.7	0.0	0.0	13.3	0.0	0.0	-37.6
142	425499.98	5409457.87	299.87	0	DEN	4000	58.4	22.8	0.0	0.0	0.0	81.0	104.1	-1.7	0.0	0.0	16.0	0.0	0.0	-118.1
142	425499.98	5409457.87	299.87	0	DEN	8000	52.6	22.8	0.0	0.0	0.0	81.0	371.2	-1.7	0.0	0.0	18.8	0.0	0.0	-393.9
143	424642.58	5409858.65	354.60	0	DEN	32	39.6	24.8	0.0	0.0	0.0	83.1	0.1	-5.8	0.0	0.0	4.8	0.0	0.0	-17.8
143	424642.58	5409858.65	354.60	0	DEN	63	62.0	24.8	0.0	0.0	0.0	83.1	0.5	-5.8	0.0	0.0	4.8	0.0	0.0	4.2
143	424642.58	5409858.65	354.60	0	DEN	125	75.3	24.8	0.0	0.0	0.0	83.1	1.7	2.0	0.0	0.0	2.7	0.0	0.0	10.5
143	424642.58	5409858.65	354.60	0	DEN	250	69.5	24.8	0.0	0.0	0.0	83.1	4.2	-0.5	0.0	0.0	4.8	0.0	0.0	2.6

Line Source, ISO 9613, Name: "TRL_OP-TMA", ID: ""																					
Nr.	X	Y	Z	Refl.	DEN	Freq.	Lw	l/a	Optime	K0	Dc	Adiv	Aatm	Agr	Afol	Ahous	Abar	Cmet	RL	Lr
	(m)	(m)	(m)			(Hz)	dB(A)	dB	dB	(dB)	(dB)	(dB)	(dB)	(dB)	(dB)	(dB)	(dB)	(dB)	(dB)	dB(A)
143	424642.58	5409858.65	354.60	0	DEN	500	69.4	24.8	0.0	0.0	0.0	83.1	7.8	-1.9	0.0	0.0	4.8	0.0	0.0	0.4
143	424642.58	5409858.65	354.60	0	DEN	1000	66.5	24.8	0.0	0.0	0.0	83.1	14.8	-1.9	0.0	0.0	4.8	0.0	0.0	-9.5
143	424642.58	5409858.65	354.60	0	DEN	2000	62.8	24.8	0.0	0.0	0.0	83.1	39.1	-1.9	0.0	0.0	4.8	0.0	0.0	-37.4
143	424642.58	5409858.65	354.60	0	DEN	4000	58.4	24.8	0.0	0.0	0.0	83.1	132.4	-1.9	0.0	0.0	4.8	0.0	0.0	-135.2
143	424642.58	5409858.65	354.60	0	DEN	8000	52.6	24.8	0.0	0.0	0.0	83.1	472.3	-1.9	0.0	0.0	4.8	0.0	0.0	-480.9
162	425100.99	5409404.00	349.02	0	DEN	32	39.6	21.5	0.0	0.0	0.0	81.6	0.1	-5.8	0.0	0.0	4.8	0.0	0.0	-19.5
162	425100.99	5409404.00	349.02	0	DEN	63	62.0	21.5	0.0	0.0	0.0	81.6	0.4	-5.8	0.0	0.0	4.8	0.0	0.0	2.6
162	425100.99	5409404.00	349.02	0	DEN	125	75.3	21.5	0.0	0.0	0.0	81.6	1.4	3.0	0.0	0.0	1.8	0.0	0.0	9.1
162	425100.99	5409404.00	349.02	0	DEN	250	69.5	21.5	0.0	0.0	0.0	81.6	3.5	0.3	0.0	0.0	4.4	0.0	0.0	1.2
162	425100.99	5409404.00	349.02	0	DEN	500	69.4	21.5	0.0	0.0	0.0	81.6	6.5	-1.3	0.0	0.0	4.8	0.0	0.0	-0.6
162	425100.99	5409404.00	349.02	0	DEN	1000	66.5	21.5	0.0	0.0	0.0	81.6	12.4	-1.3	0.0	0.0	4.8	0.0	0.0	-9.4
162	425100.99	5409404.00	349.02	0	DEN	2000	62.8	21.5	0.0	0.0	0.0	81.6	32.8	-1.3	0.0	0.0	4.8	0.0	0.0	-33.5
162	425100.99	5409404.00	349.02	0	DEN	4000	58.4	21.5	0.0	0.0	0.0	81.6	111.3	-1.3	0.0	0.0	4.8	0.0	0.0	-116.4
162	425100.99	5409404.00	349.02	0	DEN	8000	52.6	21.5	0.0	0.0	0.0	81.6	396.9	-1.3	0.0	0.0	4.8	0.0	0.0	-407.8
168	425776.63	5409373.74	328.24	0	DEN	32	39.6	20.0	0.0	0.0	0.0	80.4	0.1	-5.7	0.0	0.0	4.8	0.0	0.0	-19.8
168	425776.63	5409373.74	328.24	0	DEN	63	62.0	20.0	0.0	0.0	0.0	80.4	0.4	-5.7	0.0	0.0	4.8	0.0	0.0	2.3
168	425776.63	5409373.74	328.24	0	DEN	125	75.3	20.0	0.0	0.0	0.0	80.4	1.2	2.3	0.0	0.0	2.5	0.0	0.0	9.0
168	425776.63	5409373.74	328.24	0	DEN	250	69.5	20.0	0.0	0.0	0.0	80.4	3.1	-0.2	0.0	0.0	4.8	0.0	0.0	1.4
168	425776.63	5409373.74	328.24	0	DEN	500	69.4	20.0	0.0	0.0	0.0	80.4	5.7	-1.6	0.0	0.0	4.9	0.0	0.0	0.1
168	425776.63	5409373.74	328.24	0	DEN	1000	66.5	20.0	0.0	0.0	0.0	80.4	10.8	-1.6	0.0	0.0	5.1	0.0	0.0	-8.1
168	425776.63	5409373.74	328.24	0	DEN	2000	62.8	20.0	0.0	0.0	0.0	80.4	28.4	-1.6	0.0	0.0	5.3	0.0	0.0	-29.7
168	425776.63	5409373.74	328.24	0	DEN	4000	58.4	20.0	0.0	0.0	0.0	80.4	96.5	-1.6	0.0	0.0	5.8	0.0	0.0	-102.6
168	425776.63	5409373.74	328.24	0	DEN	8000	52.6	20.0	0.0	0.0	0.0	80.4	344.1	-1.6	0.0	0.0	6.7	0.0	0.0	-356.9
170	423876.07	5410922.04	364.00	0	DEN	32	39.6	24.9	0.0	0.0	0.0	85.6	0.2	-5.9	0.0	0.0	0.0	0.0	0.0	-15.3
170	423876.07	5410922.04	364.00	0	DEN	63	62.0	24.9	0.0	0.0	0.0	85.6	0.7	-5.9	0.0	0.0	0.0	0.0	0.0	6.6
170	423876.07	5410922.04	364.00	0	DEN	125	75.3	24.9	0.0	0.0	0.0	85.6	2.2	1.2	0.0	0.0	0.0	0.0	0.0	11.4
170	423876.07	5410922.04	364.00	0	DEN	250	69.5	24.9	0.0	0.0	0.0	85.6	5.6	-1.3	0.0	0.0	0.0	0.0	0.0	4.6
170	423876.07	5410922.04	364.00	0	DEN	500	69.4	24.9	0.0	0.0	0.0	85.6	10.3	-2.7	0.0	0.0	0.0	0.0	0.0	1.2
170	423876.07	5410922.04	364.00	0	DEN	1000	66.5	24.9	0.0	0.0	0.0	85.6	19.5	-2.7	0.0	0.0	0.0	0.0	0.0	-11.0
170	423876.07	5410922.04	364.00	0	DEN	2000	62.8	24.9	0.0	0.0	0.0	85.6	51.6	-2.7	0.0	0.0	0.0	0.0	0.0	-46.7
170	423876.07	5410922.04	364.00	0	DEN	4000	58.4	24.9	0.0	0.0	0.0	85.6	175.0	-2.7	0.0	0.0	0.0	0.0	0.0	-174.6
170	423876.07	5410922.04	364.00	0	DEN	8000	52.6	24.9	0.0	0.0	0.0	85.6	624.4	-2.7	0.0	0.0	0.0	0.0	0.0	-629.7
177	424083.09	5410477.06	364.00	0	DEN	32	39.6	23.6	0.0	0.0	0.0	84.8	0.2	-5.8	0.0	0.0	0.0	0.0	0.0	-15.8
177	424083.09	5410477.06	364.00	0	DEN	63	62.0	23.6	0.0	0.0	0.0	84.8	0.6	-5.8	0.0	0.0	0.0	0.0	0.0	6.2
177	424083.09	5410477.06	364.00	0	DEN	125	75.3	23.6	0.0	0.0	0.0	84.8	2.0	1.4	0.0	0.0	0.0	0.0	0.0	10.8
177	424083.09	5410477.06	364.00	0	DEN	250	69.5	23.6	0.0	0.0	0.0	84.8	5.1	-1.0	0.0	0.0	0.0	0.0	0.0	4.4
177	424083.09	5410477.06	364.00	0	DEN	500	69.4	23.6	0.0	0.0	0.0	84.8	9.4	-2.4	0.0	0.0	0.0	0.0	0.0	1.3
177	424083.09	5410477.06	364.00	0	DEN	1000	66.5	23.6	0.0	0.0	0.0	84.8	17.8	-2.4	0.0	0.0	0.0	0.0	0.0	-10.0
177	424083.09	5410477.06	364.00	0	DEN	2000	62.8	23.6	0.0	0.0	0.0	84.8	47.1	-2.4	0.0	0.0	0.0	0.0	0.0	-43.0
177	424083.09	5410477.06	364.00	0	DEN	4000	58.4	23.6	0.0	0.0	0.0	84.8	159.7	-2.4	0.0	0.0	0.0	0.0	0.0	-160.0
177	424083.09	5410477.06	364.00	0	DEN	8000	52.6	23.6	0.0	0.0	0.0	84.8	569.8	-2.4	0.0	0.0	0.0	0.0	0.0	-575.8
183	423987.97	5410681.39	364.00	0	DEN	32	39.6	23.4	0.0	0.0	0.0	85.1	0.2	-5.8	0.0	0.0	0.0	0.0	0.0	-16.4
183	423987.97	5410681.39	364.00	0	DEN	63	62.0	23.4	0.0	0.0	0.0	85.1	0.6	-5.8	0.0	0.0	0.0	0.0	0.0	5.6
183	423987.97	5410681.39	364.00	0	DEN	125	75.3	23.4	0.0	0.0	0.0	85.1	2.1	1.3	0.0	0.0	0.0	0.0	0.0	10.2
183	423987.97	5410681.39	364.00	0	DEN	250	69.5	23.4	0.0	0.0	0.0	85.1	5.3	-1.1	0.0	0.0	0.0	0.0	0.0	3.7
183	423987.97	5410681.39	364.00	0	DEN	500	69.4	23.4	0.0	0.0	0.0	85.1	9.8	-2.5	0.0	0.0	0.0	0.0	0.0	0.4
183	423987.97	5410681.39	364.00	0	DEN	1000	66.5	23.4	0.0	0.0	0.0	85.1	18.6	-2.5	0.0	0.0	0.0	0.0	0.0	-11.3
183	423987.97	5410681.39	364.00	0	DEN	2000	62.8	23.4	0.0	0.0	0.0	85.1	49.2	-2.5	0.0	0.0	0.0	0.0	0.0	-45.5
183	423987.97	5410681.39	364.00	0	DEN	4000	58.4	23.4	0.0	0.0	0.0	85.1	166.8	-2.5	0.0	0.0	0.0	0.0	0.0	-167.5
183	423987.97	5410681.39	364.00	0	DEN	8000	52.6	23.4	0.0	0.0	0.0	85.1	594.8	-2.5	0.0	0.0	0.0	0.0	0.0	-601.3
189	423764.42	5411184.91	364.00	0	DEN	32	39.6	24.1	0.0	0.0	0.0	86.0	0.2	-5.9	0.0	0.0	0.0	0.0	0.0	-16.5
189	423764.42	5411184.91	364.00	0	DEN	63	62.0	24.1	0.0	0.0	0.0	86.0	0.7	-5.9	0.0	0.0	0.0	0.0	0.0	5.4
189	423764.42	5411184.91	364.00	0	DEN	125	75.3	24.1	0.0	0.0	0.0	86.0	2.3	1.1	0.0	0.0	0.0	0.0	0.0	10.1
189	423764.42	5411184.91	364.00	0	DEN	250	69.5	24.1	0.0	0.0	0.0	86.0	5.9	-1.4	0.0	0.0	0.0	0.0	0.0	3.2
189	423764.42	5411184.91	364.00	0	DEN	500	69.4	24.1	0.0	0.0	0.0	86.0	10.8	-2.8	0.0	0.0	0.0	0.0	0.0	-0.4
189	423764.42	5411184.91	364.00	0	DEN	1000	66.5	24.1	0.0	0.0	0.0	86.0	20.5	-2.8	0.0	0.0	0.0	0.0	0.0	-13.0
189	423764.42	5411184.91	364.00	0	DEN	2000	62.8	24.1	0.0	0.0	0.0	86.0	54.2	-2.8	0.0	0.0	0.0	0.0	0.0	-50.5
189	423764.42	5411184.91	364.00	0	DEN	4000	58.4	24.1	0.0	0.0	0.0	86.0	183.9	-2.8	0.0	0.0	0.0	0.0	0.0	-184.5
189	423764.42	5411184.91	364.00	0	DEN	8000	52.6	24.1	0.0	0.0	0.0	86.0	656.0	-2.8	0.0	0.0	0.0	0.0	0.0	-662.4
192	423671.30	5411434.40	364.00	0	DEN	32	39.6	24.4	0.0	0.0	0.0	86.4	0.2	-5.9	0.0	0.0	0.0	0.0	0.0	-16.7
192	423671.30	5411434.40	364.00	0	DEN	63	62.0	24.4	0.0	0.0	0.0	86.4	0.7	-5.9	0.0	0.0	0.0	0.0	0.0	5.2
192	423671.30	5411434.40	364.00	0	DEN	125	75.3	24.4	0.0	0.0	0.0	86.4	2.4	0.9	0.0	0.0	0.0	0.0	0.0	10.0
192	423671.30	5411434.40	364.00	0	DEN	250	69.5	24.4	0.0	0.0	0.0	86.4	6.1	-1.5	0.0	0.0	0.0	0.0	0.0	2.9

Line Source, ISO 9613, Name: "TRL_OP-TMA", ID: ""																				
Nr.	X	Y	Z	Refl.	DEN	Freq.	Lw	l/a	Optime	K0	Dc	Adiv	Aatm	Agr	Afol	Ahous	Abar	Cmet	RL	Lr
	(m)	(m)	(m)			(Hz)	dB(A)	dB	dB	(dB)	(dB)	(dB)	(dB)	(dB)	(dB)	(dB)	(dB)	(dB)	(dB)	dB(A)
192	423671.30	5411434.40	364.00	0	DEN	500	69.4	24.4	0.0	0.0	0.0	86.4	11.3	-2.9	0.0	0.0	0.0	0.0	0.0	-1.0
192	423671.30	5411434.40	364.00	0	DEN	1000	66.5	24.4	0.0	0.0	0.0	86.4	21.4	-2.9	0.0	0.0	0.0	0.0	0.0	-14.0
192	423671.30	5411434.40	364.00	0	DEN	2000	62.8	24.4	0.0	0.0	0.0	86.4	56.7	-2.9	0.0	0.0	0.0	0.0	0.0	-52.9
192	423671.30	5411434.40	364.00	0	DEN	4000	58.4	24.4	0.0	0.0	0.0	86.4	192.1	-2.9	0.0	0.0	0.0	0.0	0.0	-192.8
192	423671.30	5411434.40	364.00	0	DEN	8000	52.6	24.4	0.0	0.0	0.0	86.4	685.2	-2.9	0.0	0.0	0.0	0.0	0.0	-691.7
382	423581.42	5411560.00	364.00	0	DEN	32	39.6	19.6	0.0	0.0	0.0	86.6	0.2	-5.9	0.0	0.0	0.0	0.0	0.0	-21.7
382	423581.42	5411560.00	364.00	0	DEN	63	62.0	19.6	0.0	0.0	0.0	86.6	0.7	-5.9	0.0	0.0	0.0	0.0	0.0	0.2
382	423581.42	5411560.00	364.00	0	DEN	125	75.3	19.6	0.0	0.0	0.0	86.6	2.5	0.9	0.0	0.0	0.0	0.0	0.0	5.0
382	423581.42	5411560.00	364.00	0	DEN	250	69.5	19.6	0.0	0.0	0.0	86.6	6.3	-1.6	0.0	0.0	0.0	0.0	0.0	-2.2
382	423581.42	5411560.00	364.00	0	DEN	500	69.4	19.6	0.0	0.0	0.0	86.6	11.6	-3.0	0.0	0.0	0.0	0.0	0.0	-6.2
382	423581.42	5411560.00	364.00	0	DEN	1000	66.5	19.6	0.0	0.0	0.0	86.6	22.0	-3.0	0.0	0.0	0.0	0.0	0.0	-19.5
382	423581.42	5411560.00	364.00	0	DEN	2000	62.8	19.6	0.0	0.0	0.0	86.6	58.1	-3.0	0.0	0.0	0.0	0.0	0.0	-59.4
382	423581.42	5411560.00	364.00	0	DEN	4000	58.4	19.6	0.0	0.0	0.0	86.6	197.2	-3.0	0.0	0.0	0.0	0.0	0.0	-202.8
382	423581.42	5411560.00	364.00	0	DEN	8000	52.6	19.6	0.0	0.0	0.0	86.6	703.2	-3.0	0.0	0.0	0.0	0.0	0.0	-714.6
423	425819.99	5409402.62	327.35	0	DEN	32	39.6	11.4	0.0	0.0	0.0	80.4	0.1	-5.7	0.0	0.0	4.8	0.0	0.0	-28.4
423	425819.99	5409402.62	327.35	0	DEN	63	62.0	11.4	0.0	0.0	0.0	80.4	0.4	-5.7	0.0	0.0	4.8	0.0	0.0	-6.3
423	425819.99	5409402.62	327.35	0	DEN	125	75.3	11.4	0.0	0.0	0.0	80.4	1.2	2.2	0.0	0.0	2.6	0.0	0.0	0.4
423	425819.99	5409402.62	327.35	0	DEN	250	69.5	11.4	0.0	0.0	0.0	80.4	3.1	-0.2	0.0	0.0	4.8	0.0	0.0	-7.0
423	425819.99	5409402.62	327.35	0	DEN	500	69.4	11.4	0.0	0.0	0.0	80.4	5.7	-1.6	0.0	0.0	4.8	0.0	0.0	-8.3
423	425819.99	5409402.62	327.35	0	DEN	1000	66.5	11.4	0.0	0.0	0.0	80.4	10.8	-1.6	0.0	0.0	4.8	0.0	0.0	-16.3
423	425819.99	5409402.62	327.35	0	DEN	2000	62.8	11.4	0.0	0.0	0.0	80.4	28.4	-1.6	0.0	0.0	4.8	0.0	0.0	-37.8
423	425819.99	5409402.62	327.35	0	DEN	4000	58.4	11.4	0.0	0.0	0.0	80.4	96.5	-1.6	0.0	0.0	4.9	0.0	0.0	-110.2
423	425819.99	5409402.62	327.35	0	DEN	8000	52.6	11.4	0.0	0.0	0.0	80.4	344.0	-1.6	0.0	0.0	5.0	0.0	0.0	-363.7

Point Source, ISO 9613, Name: "AC3", ID: ""																				
Nr.	X	Y	Z	Refl.	DEN	Freq.	Lw	l/a	Optime	K0	Dc	Adiv	Aatm	Agr	Afol	Ahous	Abar	Cmet	RL	Lr
	(m)	(m)	(m)			(Hz)	dB(A)	dB	dB	(dB)	(dB)	(dB)	(dB)	(dB)	(dB)	(dB)	(dB)	(dB)	(dB)	dB(A)
425	420185.80	5412295.08	365.62	0	DEN	500	99.0	0.0	0.0	0.0	0.0	90.1	17.4	-2.5	0.0	0.0	4.8	0.0	0.0	-10.8

Line Source, ISO 9613, Name: "MGR_SP", ID: ""																				
Nr.	X	Y	Z	Refl.	DEN	Freq.	Lw	l/a	Optime	K0	Dc	Adiv	Aatm	Agr	Afol	Ahous	Abar	Cmet	RL	Lr
	(m)	(m)	(m)			(Hz)	dB(A)	dB	dB	(dB)	(dB)	(dB)	(dB)	(dB)	(dB)	(dB)	(dB)	(dB)	(dB)	dB(A)
171	425807.01	5409407.94	324.36	0	DEN	32	29.1	26.3	0.0	0.0	0.0	80.4	0.1	-5.7	0.0	0.0	4.8	0.0	0.0	-24.1
171	425807.01	5409407.94	324.36	0	DEN	63	46.6	26.3	0.0	0.0	0.0	80.4	0.4	-5.7	0.0	0.0	4.8	0.0	0.0	-6.9
171	425807.01	5409407.94	324.36	0	DEN	125	58.3	26.3	0.0	0.0	0.0	80.4	1.2	2.2	0.0	0.0	2.6	0.0	0.0	-1.8
171	425807.01	5409407.94	324.36	0	DEN	250	60.9	26.3	0.0	0.0	0.0	80.4	3.1	-0.2	0.0	0.0	4.8	0.0	0.0	-0.8
171	425807.01	5409407.94	324.36	0	DEN	500	65.1	26.3	0.0	0.0	0.0	80.4	5.7	-1.6	0.0	0.0	4.8	0.0	0.0	2.1
171	425807.01	5409407.94	324.36	0	DEN	1000	65.6	26.3	0.0	0.0	0.0	80.4	10.8	-1.6	0.0	0.0	4.8	0.0	0.0	-2.5
171	425807.01	5409407.94	324.36	0	DEN	2000	64.3	26.3	0.0	0.0	0.0	80.4	28.6	-1.6	0.0	0.0	4.9	0.0	0.0	-21.6
171	425807.01	5409407.94	324.36	0	DEN	4000	60.4	26.3	0.0	0.0	0.0	80.4	96.8	-1.6	0.0	0.0	5.0	0.0	0.0	-94.0
171	425807.01	5409407.94	324.36	0	DEN	8000	55.1	26.3	0.0	0.0	0.0	80.4	345.4	-1.6	0.0	0.0	5.3	0.0	0.0	-348.1
198	427615.12	5409653.01	392.39	0	DEN	32	29.1	24.0	0.0	0.0	0.0	79.6	0.1	-5.7	0.0	0.0	0.0	0.0	0.0	-20.9
198	427615.12	5409653.01	392.39	0	DEN	63	46.6	24.0	0.0	0.0	0.0	79.6	0.3	-5.7	0.0	0.0	0.0	0.0	0.0	-3.7
198	427615.12	5409653.01	392.39	0	DEN	125	58.3	24.0	0.0	0.0	0.0	79.6	1.1	1.4	0.0	0.0	0.0	0.0	0.0	0.1
198	427615.12	5409653.01	392.39	0	DEN	250	60.9	24.0	0.0	0.0	0.0	79.6	2.8	-1.0	0.0	0.0	0.0	0.0	0.0	3.4
198	427615.12	5409653.01	392.39	0	DEN	500	65.1	24.0	0.0	0.0	0.0	79.6	5.2	-2.4	0.0	0.0	0.0	0.0	0.0	6.6
198	427615.12	5409653.01	392.39	0	DEN	1000	65.6	24.0	0.0	0.0	0.0	79.6	9.9	-2.4	0.0	0.0	0.0	0.0	0.0	2.5
198	427615.12	5409653.01	392.39	0	DEN	2000	64.3	24.0	0.0	0.0	0.0	79.6	26.2	-2.4	0.0	0.0	0.0	0.0	0.0	-15.1
198	427615.12	5409653.01	392.39	0	DEN	4000	60.4	24.0	0.0	0.0	0.0	79.6	88.7	-2.4	0.0	0.0	0.0	0.0	0.0	-81.5
198	427615.12	5409653.01	392.39	0	DEN	8000	55.1	24.0	0.0	0.0	0.0	79.6	316.3	-2.4	0.0	0.0	0.0	0.0	0.0	-314.5
205	427128.16	5409763.49	392.48	0	DEN	32	29.1	24.2	0.0	0.0	0.0	80.0	0.1	-5.7	0.0	0.0	0.0	0.0	0.0	-21.1
205	427128.16	5409763.49	392.48	0	DEN	63	46.6	24.2	0.0	0.0	0.0	80.0	0.3	-5.7	0.0	0.0	0.0	0.0	0.0	-3.8
205	427128.16	5409763.49	392.48	0	DEN	125	58.3	24.2	0.0	0.0	0.0	80.0	1.2	1.8	0.0	0.0	0.0	0.0	0.0	-0.5
205	427128.16	5409763.49	392.48	0	DEN	250	60.9	24.2	0.0	0.0	0.0	80.0	3.0	-0.6	0.0	0.0	0.0	0.0	0.0	2.8
205	427128.16	5409763.49	392.48	0	DEN	500	65.1	24.2	0.0	0.0	0.0	80.0	5.5	-2.0	0.0	0.0	0.0	0.0	0.0	5.9
205	427128.16	5409763.49	392.48	0	DEN	1000	65.6	24.2	0.0	0.0	0.0	80.0	10.4	-2.0	0.0	0.0	0.0	0.0	0.0	1.5
205	427128.16	5409763.49	392.48	0	DEN	2000	64.3	24.2	0.0	0.0	0.0	80.0	27.3	-2.0	0.0	0.0	0.0	0.0	0.0	-16.8
205	427128.16	5409763.49	392.48	0	DEN	4000	60.4	24.2	0.0	0.0	0.0	80.0	92.7	-2.0	0.0	0.0	0.0	0.0	0.0	-86.1
205	427128.16	5409763.49	392.48	0	DEN	8000	55.1	24.2	0.0	0.0	0.0	80.0	330.8	-2.0	0.0	0.0	0.0	0.0	0.0	-329.5
248	427803.65	5409569.97	391.88	0	DEN	32	29.1	22.1	0.0	0.0	0.0	79.4	0.1	-5.7	0.0	0.0	0.0	0.0	0.0	-22.6
248	427803.65	5409569.97	391.88	0	DEN	63	46.6	22.1	0.0	0.0	0.0	79.4	0.3	-5.7	0.0	0.0	0.0	0.0	0.0	-5.3
248	427803.65	5409569.97	391.88	0	DEN	125	58.3	22.1	0.0	0.0	0.0	79.4	1.1	2.0	0.0	0.0	0.0	0.0	0.0	-2.2
248	427803.65	5409569.97	391.88	0	DEN	250	60.9	22.1	0.0	0.0	0.0	79.4	2.8	-0.4	0.0	0.0	0.0	0.0	0.0	1.2

Line Source, ISO 9613, Name: "MGR_SP", ID: ""																					
Nr.	X	Y	Z	Refl.	DEN	Freq.	Lw	l/a	Optime	K0	Dc	Adiv	Aatm	Agr	Afol	Ahous	Abar	Cmet	RL	Lr
	(m)	(m)	(m)			(Hz)	dB(A)	dB	dB	(dB)	(dB)	(dB)	(dB)	(dB)	(dB)	(dB)	(dB)	(dB)	(dB)	dB(A)
248	427803.65	5409569.97	391.88	0	DEN	500	65.1	22.1	0.0	0.0	0.0	79.4	5.1	-1.8	0.0	0.0	0.0	0.0	0.0	4.5
248	427803.65	5409569.97	391.88	0	DEN	1000	65.6	22.1	0.0	0.0	0.0	79.4	9.7	-1.8	0.0	0.0	0.0	0.0	0.0	0.4
248	427803.65	5409569.97	391.88	0	DEN	2000	64.3	22.1	0.0	0.0	0.0	79.4	25.5	-1.8	0.0	0.0	0.0	0.0	0.0	-16.7
248	427803.65	5409569.97	391.88	0	DEN	4000	60.4	22.1	0.0	0.0	0.0	79.4	86.6	-1.8	0.0	0.0	0.0	0.0	0.0	-81.7
248	427803.65	5409569.97	391.88	0	DEN	8000	55.1	22.1	0.0	0.0	0.0	79.4	308.8	-1.8	0.0	0.0	0.0	0.0	0.0	-309.2
251	426424.04	5409599.48	372.10	0	DEN	32	29.1	22.5	0.0	0.0	0.0	80.1	0.1	-5.7	0.0	0.0	4.8	0.0	0.0	-27.5
251	426424.04	5409599.48	372.10	0	DEN	63	46.6	22.5	0.0	0.0	0.0	80.1	0.3	-5.7	0.0	0.0	4.8	0.0	0.0	-10.3
251	426424.04	5409599.48	372.10	0	DEN	125	58.3	22.5	0.0	0.0	0.0	80.1	1.2	2.0	0.0	0.0	2.7	0.0	0.0	-5.2
251	426424.04	5409599.48	372.10	0	DEN	250	60.9	22.5	0.0	0.0	0.0	80.1	3.0	-0.4	0.0	0.0	4.8	0.0	0.0	-3.9
251	426424.04	5409599.48	372.10	0	DEN	500	65.1	22.5	0.0	0.0	0.0	80.1	5.5	-1.8	0.0	0.0	4.8	0.0	0.0	-0.9
251	426424.04	5409599.48	372.10	0	DEN	1000	65.6	22.5	0.0	0.0	0.0	80.1	10.4	-1.8	0.0	0.0	4.8	0.0	0.0	-5.3
251	426424.04	5409599.48	372.10	0	DEN	2000	64.3	22.5	0.0	0.0	0.0	80.1	27.4	-1.8	0.0	0.0	4.8	0.0	0.0	-23.6
251	426424.04	5409599.48	372.10	0	DEN	4000	60.4	22.5	0.0	0.0	0.0	80.1	93.0	-1.8	0.0	0.0	4.8	0.0	0.0	-93.1
251	426424.04	5409599.48	372.10	0	DEN	8000	55.1	22.5	0.0	0.0	0.0	80.1	331.9	-1.8	0.0	0.0	4.8	0.0	0.0	-337.3
254	426257.93	5409503.31	362.49	0	DEN	32	29.1	22.4	0.0	0.0	0.0	80.0	0.1	-5.7	0.0	0.0	4.8	0.0	0.0	-27.6
254	426257.93	5409503.31	362.49	0	DEN	63	46.6	22.4	0.0	0.0	0.0	80.0	0.3	-5.7	0.0	0.0	4.8	0.0	0.0	-10.4
254	426257.93	5409503.31	362.49	0	DEN	125	58.3	22.4	0.0	0.0	0.0	80.0	1.2	2.3	0.0	0.0	2.5	0.0	0.0	-5.2
254	426257.93	5409503.31	362.49	0	DEN	250	60.9	22.4	0.0	0.0	0.0	80.0	2.9	-0.2	0.0	0.0	4.8	0.0	0.0	-4.3
254	426257.93	5409503.31	362.49	0	DEN	500	65.1	22.4	0.0	0.0	0.0	80.0	5.4	-1.5	0.0	0.0	4.8	0.0	0.0	-1.2
254	426257.93	5409503.31	362.49	0	DEN	1000	65.6	22.4	0.0	0.0	0.0	80.0	10.3	-1.5	0.0	0.0	4.8	0.0	0.0	-5.5
254	426257.93	5409503.31	362.49	0	DEN	2000	64.3	22.4	0.0	0.0	0.0	80.0	27.2	-1.5	0.0	0.0	4.8	0.0	0.0	-23.7
254	426257.93	5409503.31	362.49	0	DEN	4000	60.4	22.4	0.0	0.0	0.0	80.0	92.3	-1.5	0.0	0.0	4.8	0.0	0.0	-92.7
254	426257.93	5409503.31	362.49	0	DEN	8000	55.1	22.4	0.0	0.0	0.0	80.0	329.1	-1.5	0.0	0.0	4.8	0.0	0.0	-334.9
263	426728.72	5409640.81	379.00	0	DEN	32	29.1	22.3	0.0	0.0	0.0	79.9	0.1	-5.7	0.0	0.0	4.8	0.0	0.0	-27.7
263	426728.72	5409640.81	379.00	0	DEN	63	46.6	22.3	0.0	0.0	0.0	79.9	0.3	-5.7	0.0	0.0	4.8	0.0	0.0	-10.4
263	426728.72	5409640.81	379.00	0	DEN	125	58.3	22.3	0.0	0.0	0.0	79.9	1.1	1.8	0.0	0.0	3.0	0.0	0.0	-5.3
263	426728.72	5409640.81	379.00	0	DEN	250	60.9	22.3	0.0	0.0	0.0	79.9	2.9	-0.7	0.0	0.0	4.8	0.0	0.0	-3.7
263	426728.72	5409640.81	379.00	0	DEN	500	65.1	22.3	0.0	0.0	0.0	79.9	5.4	-2.1	0.0	0.0	4.8	0.0	0.0	-0.6
263	426728.72	5409640.81	379.00	0	DEN	1000	65.6	22.3	0.0	0.0	0.0	79.9	10.2	-2.1	0.0	0.0	4.9	0.0	0.0	-5.0
263	426728.72	5409640.81	379.00	0	DEN	2000	64.3	22.3	0.0	0.0	0.0	79.9	26.9	-2.1	0.0	0.0	5.0	0.0	0.0	-23.1
263	426728.72	5409640.81	379.00	0	DEN	4000	60.4	22.3	0.0	0.0	0.0	79.9	91.2	-2.1	0.0	0.0	5.1	0.0	0.0	-91.5
263	426728.72	5409640.81	379.00	0	DEN	8000	55.1	22.3	0.0	0.0	0.0	79.9	325.4	-2.1	0.0	0.0	5.5	0.0	0.0	-331.3
274	425501.73	5409457.61	299.91	0	DEN	32	29.1	22.9	0.0	0.0	0.0	81.0	0.1	-5.8	0.0	0.0	5.2	0.0	0.0	-28.6
274	425501.73	5409457.61	299.91	0	DEN	63	46.6	22.9	0.0	0.0	0.0	81.0	0.4	-5.8	0.0	0.0	5.5	0.0	0.0	-11.7
274	425501.73	5409457.61	299.91	0	DEN	125	58.3	22.9	0.0	0.0	0.0	81.0	1.3	2.1	0.0	0.0	4.1	0.0	0.0	-7.3
274	425501.73	5409457.61	299.91	0	DEN	250	60.9	22.9	0.0	0.0	0.0	81.0	3.3	-0.3	0.0	0.0	7.2	0.0	0.0	-7.5
274	425501.73	5409457.61	299.91	0	DEN	500	65.1	22.9	0.0	0.0	0.0	81.0	6.1	-1.7	0.0	0.0	8.8	0.0	0.0	-6.3
274	425501.73	5409457.61	299.91	0	DEN	1000	65.6	22.9	0.0	0.0	0.0	81.0	11.6	-1.7	0.0	0.0	10.9	0.0	0.0	-13.3
274	425501.73	5409457.61	299.91	0	DEN	2000	64.3	22.9	0.0	0.0	0.0	81.0	30.7	-1.7	0.0	0.0	13.3	0.0	0.0	-36.1
274	425501.73	5409457.61	299.91	0	DEN	4000	60.4	22.9	0.0	0.0	0.0	81.0	104.0	-1.7	0.0	0.0	16.0	0.0	0.0	-116.1
274	425501.73	5409457.61	299.91	0	DEN	8000	55.1	22.9	0.0	0.0	0.0	81.0	371.1	-1.7	0.0	0.0	18.9	0.0	0.0	-391.2
307	427438.12	5409740.24	392.57	0	DEN	32	29.1	21.6	0.0	0.0	0.0	79.9	0.1	-5.7	0.0	0.0	4.8	0.0	0.0	-28.4
307	427438.12	5409740.24	392.57	0	DEN	63	46.6	21.6	0.0	0.0	0.0	79.9	0.3	-5.7	0.0	0.0	4.8	0.0	0.0	-11.1
307	427438.12	5409740.24	392.57	0	DEN	125	58.3	21.6	0.0	0.0	0.0	79.9	1.1	1.3	0.0	0.0	3.5	0.0	0.0	-6.0
307	427438.12	5409740.24	392.57	0	DEN	250	60.9	21.6	0.0	0.0	0.0	79.9	2.9	-1.1	0.0	0.0	4.8	0.0	0.0	-4.0
307	427438.12	5409740.24	392.57	0	DEN	500	65.1	21.6	0.0	0.0	0.0	79.9	5.4	-2.5	0.0	0.0	4.8	0.0	0.0	-0.9
307	427438.12	5409740.24	392.57	0	DEN	1000	65.6	21.6	0.0	0.0	0.0	79.9	10.2	-2.5	0.0	0.0	4.8	0.0	0.0	-5.2
307	427438.12	5409740.24	392.57	0	DEN	2000	64.3	21.6	0.0	0.0	0.0	79.9	26.9	-2.5	0.0	0.0	4.8	0.0	0.0	-23.3
307	427438.12	5409740.24	392.57	0	DEN	4000	60.4	21.6	0.0	0.0	0.0	79.9	91.4	-2.5	0.0	0.0	4.8	0.0	0.0	-91.6
307	427438.12	5409740.24	392.57	0	DEN	8000	55.1	21.6	0.0	0.0	0.0	79.9	325.9	-2.5	0.0	0.0	4.8	0.0	0.0	-331.5
308	426581.95	5409592.33	378.07	0	DEN	32	29.1	21.6	0.0	0.0	0.0	79.9	0.1	-5.7	0.0	0.0	0.0	0.0	0.0	-23.6
308	426581.95	5409592.33	378.07	0	DEN	63	46.6	21.6	0.0	0.0	0.0	79.9	0.3	-5.7	0.0	0.0	0.0	0.0	0.0	-6.3
308	426581.95	5409592.33	378.07	0	DEN	125	58.3	21.6	0.0	0.0	0.0	79.9	1.1	3.1	0.0	0.0	0.0	0.0	0.0	-4.3
308	426581.95	5409592.33	378.07	0	DEN	250	60.9	21.6	0.0	0.0	0.0	79.9	2.9	0.3	0.0	0.0	0.0	0.0	0.0	-0.6
308	426581.95	5409592.33	378.07	0	DEN	500	65.1	21.6	0.0	0.0	0.0	79.9	5.4	-1.5	0.0	0.0	0.0	0.0	0.0	2.9
308	426581.95	5409592.33	378.07	0	DEN	1000	65.6	21.6	0.0	0.0	0.0	79.9	10.2	-1.5	0.0	0.0	0.0	0.0	0.0	-1.4
308	426581.95	5409592.33	378.07	0	DEN	2000	64.3	21.6	0.0	0.0	0.0	79.9	26.9	-1.5	0.0	0.0	0.0	0.0	0.0	-19.4
308	426581.95	5409592.33	378.07	0	DEN	4000	60.4	21.6	0.0	0.0	0.0	79.9	91.1	-1.5	0.0	0.0	0.0	0.0	0.0	-87.5
308	426581.95	5409592.33	378.07	0	DEN	8000	55.1	21.6	0.0	0.0	0.0	79.9	324.9	-1.5	0.0	0.0	0.0	0.0	0.0	-326.6
323	426082.81	5409381.18	341.86	0	DEN	32	29.1	21.1	0.0	0.0	0.0	79.9	0.1	-5.7	0.0	0.0	4.8	0.0	0.0	-28.9
323	426082.81	5409381.18	341.86	0	DEN	63	46.6	21.1	0.0	0.0	0.0	79.9	0.3	-5.7	0.0	0.0	4.8	0.0	0.0	-11.6
323	426082.81	5409381.18	341.86	0	DEN	125	58.3	21.1	0.0	0.0	0.0	79.9	1.1	2.1	0.0	0.0	2.7	0.0	0.0	-6.4
323	426082.81	5409381.18	341.86	0	DEN	250	60.9	21.1	0.0	0.0	0.0	79.9	2.9	-0.3	0.0	0.0	4.8	0.0	0.0	-5.3

Line Source, ISO 9613, Name: "MGR_SP", ID: ""																					
Nr.	X	Y	Z	Refl.	DEN	Freq.	Lw	l/a	Optime	K0	Dc	Adiv	Aatm	Agr	Afol	Ahous	Abar	Cmet	RL	Lr
	(m)	(m)	(m)			(Hz)	dB(A)	dB	dB	(dB)	(dB)	(dB)	(dB)	(dB)	(dB)	(dB)	(dB)	(dB)	(dB)	dB(A)
323	426082.81	5409381.18	341.86	0	DEN	500	65.1	21.1	0.0	0.0	0.0	79.9	5.4	-1.7	0.0	0.0	4.8	0.0	0.0	-2.2
323	426082.81	5409381.18	341.86	0	DEN	1000	65.6	21.1	0.0	0.0	0.0	79.9	10.2	-1.7	0.0	0.0	4.8	0.0	0.0	-6.5
323	426082.81	5409381.18	341.86	0	DEN	2000	64.3	21.1	0.0	0.0	0.0	79.9	26.9	-1.7	0.0	0.0	4.9	0.0	0.0	-24.6
323	426082.81	5409381.18	341.86	0	DEN	4000	60.4	21.1	0.0	0.0	0.0	79.9	91.3	-1.7	0.0	0.0	5.0	0.0	0.0	-93.0
323	426082.81	5409381.18	341.86	0	DEN	8000	55.1	21.1	0.0	0.0	0.0	79.9	325.8	-1.7	0.0	0.0	5.2	0.0	0.0	-333.0
338	427314.03	5409783.00	391.51	0	DEN	32	29.1	20.8	0.0	0.0	0.0	80.0	0.1	-5.7	0.0	0.0	4.8	0.0	0.0	-29.3
338	427314.03	5409783.00	391.51	0	DEN	63	46.6	20.8	0.0	0.0	0.0	80.0	0.3	-5.7	0.0	0.0	4.8	0.0	0.0	-12.0
338	427314.03	5409783.00	391.51	0	DEN	125	58.3	20.8	0.0	0.0	0.0	80.0	1.2	1.3	0.0	0.0	3.5	0.0	0.0	-6.9
338	427314.03	5409783.00	391.51	0	DEN	250	60.9	20.8	0.0	0.0	0.0	80.0	3.0	-1.2	0.0	0.0	4.8	0.0	0.0	-4.9
338	427314.03	5409783.00	391.51	0	DEN	500	65.1	20.8	0.0	0.0	0.0	80.0	5.5	-2.6	0.0	0.0	4.8	0.0	0.0	-1.8
338	427314.03	5409783.00	391.51	0	DEN	1000	65.6	20.8	0.0	0.0	0.0	80.0	10.4	-2.6	0.0	0.0	4.8	0.0	0.0	-6.2
338	427314.03	5409783.00	391.51	0	DEN	2000	64.3	20.8	0.0	0.0	0.0	80.0	27.4	-2.6	0.0	0.0	4.8	0.0	0.0	-24.5
338	427314.03	5409783.00	391.51	0	DEN	4000	60.4	20.8	0.0	0.0	0.0	80.0	92.9	-2.6	0.0	0.0	4.8	0.0	0.0	-93.9
338	427314.03	5409783.00	391.51	0	DEN	8000	55.1	20.8	0.0	0.0	0.0	80.0	331.3	-2.6	0.0	0.0	4.8	0.0	0.0	-337.6
341	426858.01	5409696.72	379.92	0	DEN	32	29.1	20.6	0.0	0.0	0.0	80.0	0.1	-5.7	0.0	0.0	0.0	0.0	0.0	-24.7
341	426858.01	5409696.72	379.92	0	DEN	63	46.6	20.6	0.0	0.0	0.0	80.0	0.3	-5.7	0.0	0.0	0.0	0.0	0.0	-7.4
341	426858.01	5409696.72	379.92	0	DEN	125	58.3	20.6	0.0	0.0	0.0	80.0	1.2	1.8	0.0	0.0	0.0	0.0	0.0	-4.0
341	426858.01	5409696.72	379.92	0	DEN	250	60.9	20.6	0.0	0.0	0.0	80.0	2.9	-0.7	0.0	0.0	0.0	0.0	0.0	-0.8
341	426858.01	5409696.72	379.92	0	DEN	500	65.1	20.6	0.0	0.0	0.0	80.0	5.4	-2.1	0.0	0.0	0.0	0.0	0.0	2.4
341	426858.01	5409696.72	379.92	0	DEN	1000	65.6	20.6	0.0	0.0	0.0	80.0	10.3	-2.1	0.0	0.0	0.0	0.0	0.0	-2.0
341	426858.01	5409696.72	379.92	0	DEN	2000	64.3	20.6	0.0	0.0	0.0	80.0	27.1	-2.1	0.0	0.0	0.0	0.0	0.0	-20.1
341	426858.01	5409696.72	379.92	0	DEN	4000	60.4	20.6	0.0	0.0	0.0	80.0	92.0	-2.1	0.0	0.0	0.0	0.0	0.0	-88.9
341	426858.01	5409696.72	379.92	0	DEN	8000	55.1	20.6	0.0	0.0	0.0	80.0	328.2	-2.1	0.0	0.0	0.0	0.0	0.0	-330.4
386	426955.72	5409723.27	387.42	0	DEN	32	29.1	19.6	0.0	0.0	0.0	80.0	0.1	-5.7	0.0	0.0	0.0	0.0	0.0	-25.6
386	426955.72	5409723.27	387.42	0	DEN	63	46.6	19.6	0.0	0.0	0.0	80.0	0.3	-5.7	0.0	0.0	0.0	0.0	0.0	-8.4
386	426955.72	5409723.27	387.42	0	DEN	125	58.3	19.6	0.0	0.0	0.0	80.0	1.2	1.8	0.0	0.0	0.0	0.0	0.0	-5.0
386	426955.72	5409723.27	387.42	0	DEN	250	60.9	19.6	0.0	0.0	0.0	80.0	2.9	-0.7	0.0	0.0	0.0	0.0	0.0	-1.7
386	426955.72	5409723.27	387.42	0	DEN	500	65.1	19.6	0.0	0.0	0.0	80.0	5.4	-2.1	0.0	0.0	0.0	0.0	0.0	1.4
386	426955.72	5409723.27	387.42	0	DEN	1000	65.6	19.6	0.0	0.0	0.0	80.0	10.3	-2.1	0.0	0.0	0.0	0.0	0.0	-3.0
386	426955.72	5409723.27	387.42	0	DEN	2000	64.3	19.6	0.0	0.0	0.0	80.0	27.2	-2.1	0.0	0.0	0.0	0.0	0.0	-21.2
386	426955.72	5409723.27	387.42	0	DEN	4000	60.4	19.6	0.0	0.0	0.0	80.0	92.3	-2.1	0.0	0.0	0.0	0.0	0.0	-90.2
386	426955.72	5409723.27	387.42	0	DEN	8000	55.1	19.6	0.0	0.0	0.0	80.0	329.0	-2.1	0.0	0.0	0.0	0.0	0.0	-332.2
388	426183.22	5409403.17	351.94	0	DEN	32	29.1	19.4	0.0	0.0	0.0	79.8	0.1	-5.7	0.0	0.0	4.8	0.0	0.0	-30.5
388	426183.22	5409403.17	351.94	0	DEN	63	46.6	19.4	0.0	0.0	0.0	79.8	0.3	-5.7	0.0	0.0	4.8	0.0	0.0	-13.2
388	426183.22	5409403.17	351.94	0	DEN	125	58.3	19.4	0.0	0.0	0.0	79.8	1.1	2.1	0.0	0.0	2.7	0.0	0.0	-8.1
388	426183.22	5409403.17	351.94	0	DEN	250	60.9	19.4	0.0	0.0	0.0	79.8	2.9	-0.3	0.0	0.0	4.8	0.0	0.0	-6.9
388	426183.22	5409403.17	351.94	0	DEN	500	65.1	19.4	0.0	0.0	0.0	79.8	5.3	-1.7	0.0	0.0	4.9	0.0	0.0	-3.8
388	426183.22	5409403.17	351.94	0	DEN	1000	65.6	19.4	0.0	0.0	0.0	79.8	10.1	-1.7	0.0	0.0	5.1	0.0	0.0	-8.3
388	426183.22	5409403.17	351.94	0	DEN	2000	64.3	19.4	0.0	0.0	0.0	79.8	26.7	-1.7	0.0	0.0	5.3	0.0	0.0	-26.4
388	426183.22	5409403.17	351.94	0	DEN	4000	60.4	19.4	0.0	0.0	0.0	79.8	90.4	-1.7	0.0	0.0	5.8	0.0	0.0	-94.5
388	426183.22	5409403.17	351.94	0	DEN	8000	55.1	19.4	0.0	0.0	0.0	79.8	322.5	-1.7	0.0	0.0	6.6	0.0	0.0	-332.7
432	426316.48	5409600.28	366.28	0	DEN	32	29.1	17.5	0.0	0.0	0.0	80.2	0.1	-5.7	0.0	0.0	4.8	0.0	0.0	-32.7
432	426316.48	5409600.28	366.28	0	DEN	63	46.6	17.5	0.0	0.0	0.0	80.2	0.4	-5.7	0.0	0.0	4.8	0.0	0.0	-15.5
432	426316.48	5409600.28	366.28	0	DEN	125	58.3	17.5	0.0	0.0	0.0	80.2	1.2	5.0	0.0	0.0	0.0	0.0	0.0	-10.6
432	426316.48	5409600.28	366.28	0	DEN	250	60.9	17.5	0.0	0.0	0.0	80.2	3.0	1.5	0.0	0.0	3.3	0.0	0.0	-9.6
432	426316.48	5409600.28	366.28	0	DEN	500	65.1	17.5	0.0	0.0	0.0	80.2	5.6	-0.9	0.0	0.0	4.8	0.0	0.0	-7.0
432	426316.48	5409600.28	366.28	0	DEN	1000	65.6	17.5	0.0	0.0	0.0	80.2	10.5	-0.9	0.0	0.0	4.8	0.0	0.0	-11.5
432	426316.48	5409600.28	366.28	0	DEN	2000	64.3	17.5	0.0	0.0	0.0	80.2	27.8	-0.9	0.0	0.0	4.8	0.0	0.0	-30.1
432	426316.48	5409600.28	366.28	0	DEN	4000	60.4	17.5	0.0	0.0	0.0	80.2	94.4	-0.9	0.0	0.0	4.8	0.0	0.0	-100.5
432	426316.48	5409600.28	366.28	0	DEN	8000	55.1	17.5	0.0	0.0	0.0	80.2	336.7	-0.9	0.0	0.0	4.8	0.0	0.0	-348.1

Line Source, ISO 9613, Name: "WTR_OPMill", ID: ""																					
Nr.	X	Y	Z	Refl.	DEN	Freq.	Lw	l/a	Optime	K0	Dc	Adiv	Aatm	Agr	Afol	Ahous	Abar	Cmet	RL	Lr
	(m)	(m)	(m)			(Hz)	dB(A)	dB	dB	(dB)	(dB)	(dB)	(dB)	(dB)	(dB)	(dB)	(dB)	(dB)	(dB)	dB(A)
196	425903.49	5409397.40	331.88	0	DEN	32	20.2	23.8	0.0	0.0	0.0	80.2	0.1	-5.7	0.0	0.0	4.8	0.0	0.0	-35.3
196	425903.49	5409397.40	331.88	0	DEN	63	38.7	23.8	0.0	0.0	0.0	80.2	0.4	-5.7	0.0	0.0	4.8	0.0	0.0	-17.1
196	425903.49	5409397.40	331.88	0	DEN	125	54.6	23.8	0.0	0.0	0.0	80.2	1.2	2.2	0.0	0.0	2.6	0.0	0.0	-7.7
196	425903.49	5409397.40	331.88	0	DEN	250	59.5	23.8	0.0	0.0	0.0	80.2	3.0	-0.2	0.0	0.0	4.8	0.0	0.0	-4.5
196	425903.49	5409397.40	331.88	0	DEN	500	62.6	23.8	0.0	0.0	0.0	80.2	5.6	-1.6	0.0	0.0	4.8	0.0	0.0	-2.5
196	425903.49	5409397.40	331.88	0	DEN	1000	68.1	23.8	0.0	0.0	0.0	80.2	10.6	-1.6	0.0	0.0	4.8	0.0	0.0	-2.1
196	425903.49	5409397.40	331.88	0	DEN	2000	67.0	23.8	0.0	0.0	0.0	80.2	28.0	-1.6	0.0	0.0	4.9	0.0	0.0	-20.6
196	425903.49	5409397.40	331.88	0	DEN	4000	59.5	23.8	0.0	0.0	0.0	80.2	94.8	-1.6	0.0	0.0	4.9	0.0	0.0	-95.0
196	425903.49	5409397.40	331.88	0	DEN	8000	50.7	23.8	0.0	0.0	0.0	80.2	338.2	-1.6	0.0	0.0	5.1	0.0	0.0	-347.4

Line Source, ISO 9613, Name: "WTR_OPMill", ID: ""																					
Nr.	X	Y	Z	Refl.	DEN	Freq.	Lw	l/a	Optime	K0	Dc	Adiv	Aatm	Agr	Afol	Ahous	Abar	Cmet	RL	Lr
	(m)	(m)	(m)			(Hz)	dB(A)	dB	dB	(dB)	(dB)	(dB)	(dB)	(dB)	(dB)	(dB)	(dB)	(dB)	(dB)	dB(A)
212	426679.20	5410062.91	390.08	0	DEN	32	20.2	23.8	0.0	0.0	0.0	81.1	0.1	-5.8	0.0	0.0	4.8	0.0	0.0	-36.2
212	426679.20	5410062.91	390.08	0	DEN	63	38.7	23.8	0.0	0.0	0.0	81.1	0.4	-5.8	0.0	0.0	4.8	0.0	0.0	-18.0
212	426679.20	5410062.91	390.08	0	DEN	125	54.6	23.8	0.0	0.0	0.0	81.1	1.3	1.5	0.0	0.0	3.3	0.0	0.0	-8.7
212	426679.20	5410062.91	390.08	0	DEN	250	59.5	23.8	0.0	0.0	0.0	81.1	3.3	-1.0	0.0	0.0	4.8	0.0	0.0	-4.9
212	426679.20	5410062.91	390.08	0	DEN	500	62.6	23.8	0.0	0.0	0.0	81.1	6.2	-2.4	0.0	0.0	4.8	0.0	0.0	-3.2
212	426679.20	5410062.91	390.08	0	DEN	1000	68.1	23.8	0.0	0.0	0.0	81.1	11.7	-2.4	0.0	0.0	4.8	0.0	0.0	-3.2
212	426679.20	5410062.91	390.08	0	DEN	2000	67.0	23.8	0.0	0.0	0.0	81.1	31.0	-2.4	0.0	0.0	4.8	0.0	0.0	-23.6
212	426679.20	5410062.91	390.08	0	DEN	4000	59.5	23.8	0.0	0.0	0.0	81.1	105.0	-2.4	0.0	0.0	4.8	0.0	0.0	-105.2
212	426679.20	5410062.91	390.08	0	DEN	8000	50.7	23.8	0.0	0.0	0.0	81.1	374.6	-2.4	0.0	0.0	4.8	0.0	0.0	-383.5
213	426260.61	5409507.61	362.88	0	DEN	32	20.2	22.6	0.0	0.0	0.0	80.0	0.1	-5.7	0.0	0.0	4.8	0.0	0.0	-36.3
213	426260.61	5409507.61	362.88	0	DEN	63	38.7	22.6	0.0	0.0	0.0	80.0	0.3	-5.7	0.0	0.0	4.8	0.0	0.0	-18.0
213	426260.61	5409507.61	362.88	0	DEN	125	54.6	22.6	0.0	0.0	0.0	80.0	1.2	2.3	0.0	0.0	2.5	0.0	0.0	-8.7
213	426260.61	5409507.61	362.88	0	DEN	250	59.5	22.6	0.0	0.0	0.0	80.0	2.9	-0.1	0.0	0.0	4.8	0.0	0.0	-5.4
213	426260.61	5409507.61	362.88	0	DEN	500	62.6	22.6	0.0	0.0	0.0	80.0	5.4	-1.5	0.0	0.0	4.8	0.0	0.0	-3.4
213	426260.61	5409507.61	362.88	0	DEN	1000	68.1	22.6	0.0	0.0	0.0	80.0	10.3	-1.5	0.0	0.0	4.8	0.0	0.0	-2.8
213	426260.61	5409507.61	362.88	0	DEN	2000	67.0	22.6	0.0	0.0	0.0	80.0	27.2	-1.5	0.0	0.0	4.8	0.0	0.0	-20.8
213	426260.61	5409507.61	362.88	0	DEN	4000	59.5	22.6	0.0	0.0	0.0	80.0	92.4	-1.5	0.0	0.0	4.8	0.0	0.0	-93.5
213	426260.61	5409507.61	362.88	0	DEN	8000	50.7	22.6	0.0	0.0	0.0	80.0	329.5	-1.5	0.0	0.0	4.8	0.0	0.0	-339.4
227	425688.37	5409424.96	316.47	0	DEN	32	20.2	22.9	0.0	0.0	0.0	80.6	0.1	-5.7	0.0	0.0	4.8	0.0	0.0	-36.7
227	425688.37	5409424.96	316.47	0	DEN	63	38.7	22.9	0.0	0.0	0.0	80.6	0.4	-5.7	0.0	0.0	4.8	0.0	0.0	-18.4
227	425688.37	5409424.96	316.47	0	DEN	125	54.6	22.9	0.0	0.0	0.0	80.6	1.2	2.3	0.0	0.0	2.5	0.0	0.0	-9.2
227	425688.37	5409424.96	316.47	0	DEN	250	59.5	22.9	0.0	0.0	0.0	80.6	3.2	-0.2	0.0	0.0	4.9	0.0	0.0	-6.1
227	425688.37	5409424.96	316.47	0	DEN	500	62.6	22.9	0.0	0.0	0.0	80.6	5.9	-1.6	0.0	0.0	5.0	0.0	0.0	-4.3
227	425688.37	5409424.96	316.47	0	DEN	1000	68.1	22.9	0.0	0.0	0.0	80.6	11.1	-1.6	0.0	0.0	5.1	0.0	0.0	-4.3
227	425688.37	5409424.96	316.47	0	DEN	2000	67.0	22.9	0.0	0.0	0.0	80.6	29.3	-1.6	0.0	0.0	5.5	0.0	0.0	-23.9
227	425688.37	5409424.96	316.47	0	DEN	4000	59.5	22.9	0.0	0.0	0.0	80.6	99.5	-1.6	0.0	0.0	6.1	0.0	0.0	-102.2
227	425688.37	5409424.96	316.47	0	DEN	8000	50.7	22.9	0.0	0.0	0.0	80.6	354.9	-1.6	0.0	0.0	7.1	0.0	0.0	-367.5
232	426364.46	5409644.32	369.88	0	DEN	32	20.2	22.3	0.0	0.0	0.0	80.3	0.1	-5.7	0.0	0.0	4.8	0.0	0.0	-36.8
232	426364.46	5409644.32	369.88	0	DEN	63	38.7	22.3	0.0	0.0	0.0	80.3	0.4	-5.7	0.0	0.0	4.8	0.0	0.0	-18.6
232	426364.46	5409644.32	369.88	0	DEN	125	54.6	22.3	0.0	0.0	0.0	80.3	1.2	2.0	0.0	0.0	2.8	0.0	0.0	-9.3
232	426364.46	5409644.32	369.88	0	DEN	250	59.5	22.3	0.0	0.0	0.0	80.3	3.0	-0.5	0.0	0.0	4.8	0.0	0.0	-5.7
232	426364.46	5409644.32	369.88	0	DEN	500	62.6	22.3	0.0	0.0	0.0	80.3	5.6	-1.9	0.0	0.0	4.8	0.0	0.0	-3.7
232	426364.46	5409644.32	369.88	0	DEN	1000	68.1	22.3	0.0	0.0	0.0	80.3	10.6	-1.9	0.0	0.0	4.8	0.0	0.0	-3.2
232	426364.46	5409644.32	369.88	0	DEN	2000	67.0	22.3	0.0	0.0	0.0	80.3	28.1	-1.9	0.0	0.0	4.8	0.0	0.0	-21.8
232	426364.46	5409644.32	369.88	0	DEN	4000	59.5	22.3	0.0	0.0	0.0	80.3	95.1	-1.9	0.0	0.0	4.8	0.0	0.0	-96.4
232	426364.46	5409644.32	369.88	0	DEN	8000	50.7	22.3	0.0	0.0	0.0	80.3	339.3	-1.9	0.0	0.0	4.8	0.0	0.0	-349.3
237	425499.74	5409457.81	299.87	0	DEN	32	20.2	22.8	0.0	0.0	0.0	81.0	0.1	-5.8	0.0	0.0	5.2	0.0	0.0	-37.5
237	425499.74	5409457.81	299.87	0	DEN	63	38.7	22.8	0.0	0.0	0.0	81.0	0.4	-5.8	0.0	0.0	5.5	0.0	0.0	-19.6
237	425499.74	5409457.81	299.87	0	DEN	125	54.6	22.8	0.0	0.0	0.0	81.0	1.3	2.2	0.0	0.0	4.0	0.0	0.0	-11.1
237	425499.74	5409457.81	299.87	0	DEN	250	59.5	22.8	0.0	0.0	0.0	81.0	3.3	-0.3	0.0	0.0	7.2	0.0	0.0	-8.9
237	425499.74	5409457.81	299.87	0	DEN	500	62.6	22.8	0.0	0.0	0.0	81.0	6.1	-1.7	0.0	0.0	8.8	0.0	0.0	-8.8
237	425499.74	5409457.81	299.87	0	DEN	1000	68.1	22.8	0.0	0.0	0.0	81.0	11.6	-1.7	0.0	0.0	10.8	0.0	0.0	-10.8
237	425499.74	5409457.81	299.87	0	DEN	2000	67.0	22.8	0.0	0.0	0.0	81.0	30.7	-1.7	0.0	0.0	13.3	0.0	0.0	-33.4
237	425499.74	5409457.81	299.87	0	DEN	4000	59.5	22.8	0.0	0.0	0.0	81.0	104.1	-1.7	0.0	0.0	16.0	0.0	0.0	-117.0
237	425499.74	5409457.81	299.87	0	DEN	8000	50.7	22.8	0.0	0.0	0.0	81.0	371.2	-1.7	0.0	0.0	18.8	0.0	0.0	-395.8
243	426489.51	5409758.77	376.62	0	DEN	32	20.2	22.3	0.0	0.0	0.0	80.4	0.1	-5.7	0.0	0.0	4.8	0.0	0.0	-37.0
243	426489.51	5409758.77	376.62	0	DEN	63	38.7	22.3	0.0	0.0	0.0	80.4	0.4	-5.7	0.0	0.0	4.8	0.0	0.0	-18.8
243	426489.51	5409758.77	376.62	0	DEN	125	54.6	22.3	0.0	0.0	0.0	80.4	1.2	2.0	0.0	0.0	2.7	0.0	0.0	-9.5
243	426489.51	5409758.77	376.62	0	DEN	250	59.5	22.3	0.0	0.0	0.0	80.4	3.1	-0.4	0.0	0.0	4.8	0.0	0.0	-6.0
243	426489.51	5409758.77	376.62	0	DEN	500	62.6	22.3	0.0	0.0	0.0	80.4	5.7	-1.9	0.0	0.0	4.8	0.0	0.0	-4.2
243	426489.51	5409758.77	376.62	0	DEN	1000	68.1	22.3	0.0	0.0	0.0	80.4	10.9	-1.9	0.0	0.0	4.8	0.0	0.0	-3.8
243	426489.51	5409758.77	376.62	0	DEN	2000	67.0	22.3	0.0	0.0	0.0	80.4	28.7	-1.9	0.0	0.0	4.8	0.0	0.0	-22.7
243	426489.51	5409758.77	376.62	0	DEN	4000	59.5	22.3	0.0	0.0	0.0	80.4	97.2	-1.9	0.0	0.0	4.8	0.0	0.0	-98.7
243	426489.51	5409758.77	376.62	0	DEN	8000	50.7	22.3	0.0	0.0	0.0	80.4	346.7	-1.9	0.0	0.0	4.8	0.0	0.0	-357.1
256	425549.54	5409548.94	266.36	0	DEN	32	20.2	22.6	0.0	0.0	0.0	81.2	0.1	-5.8	0.0	0.0	17.8	0.0	0.0	-50.5
256	425549.54	5409548.94	266.36	0	DEN	63	38.7	22.6	0.0	0.0	0.0	81.2	0.4	-5.8	0.0	0.0	20.0	0.0	0.0	-34.4
256	425549.54	5409548.94	266.36	0	DEN	125	54.6	22.6	0.0	0.0	0.0	81.2	1.3	2.1	0.0	0.0	17.9	0.0	0.0	-25.2
256	425549.54	5409548.94	266.36	0	DEN	250	59.5	22.6	0.0	0.0	0.0	81.2	3.4	-0.4	0.0	0.0	20.0	0.0	0.0	-22.0
256	425549.54	5409548.94	266.36	0	DEN	500	62.6	22.6	0.0	0.0	0.0	81.2	6.2	-1.8	0.0	0.0	20.0	0.0	0.0	-20.3
256	425549.54	5409548.94	266.36	0	DEN	1000	68.1	22.6	0.0	0.0	0.0	81.2	11.8	-1.8	0.0	0.0	20.0	0.0	0.0	-20.4
256	425549.54	5409548.94	266.36	0	DEN	2000	67.0	22.6	0.0	0.0	0.0	81.2	31.1	-1.8	0.0	0.0	20.0	0.0	0.0	-40.8
256	425549.54	5409548.94	266.36	0	DEN	4000	59.5	22.6	0.0	0.0	0.0	81.2	105.5	-1.8	0.0	0.0	20.0	0.0	0.0	-122.7
256	425549.54	5409548.94	266.36	0	DEN	8000	50.7	22.6	0.0	0.0	0.0	81.2	376.3	-1.8	0.0	0.0	20.0	0.0	0.0	-402.3

Line Source, ISO 9613, Name: "WTR_OPMill", ID: ""																					
Nr.	X	Y	Z	Refl.	DEN	Freq.	Lw	l/a	Optime	K0	Dc	Adiv	Aatm	Agr	Afol	Ahous	Abar	Cmet	RL	Lr
	(m)	(m)	(m)			(Hz)	dB(A)	dB	dB	(dB)	(dB)	(dB)	(dB)	(dB)	(dB)	(dB)	(dB)	(dB)	(dB)	dB(A)
268	425716.98	5409561.66	261.97	0	DEN	32	20.2	22.3	0.0	0.0	0.0	80.9	0.1	-5.8	0.0	0.0	18.4	0.0	0.0	-51.1
268	425716.98	5409561.66	261.97	0	DEN	63	38.7	22.3	0.0	0.0	0.0	80.9	0.4	-5.8	0.0	0.0	20.0	0.0	0.0	-34.5
268	425716.98	5409561.66	261.97	0	DEN	125	54.6	22.3	0.0	0.0	0.0	80.9	1.3	2.0	0.0	0.0	18.0	0.0	0.0	-25.2
268	425716.98	5409561.66	261.97	0	DEN	250	59.5	22.3	0.0	0.0	0.0	80.9	3.3	-0.4	0.0	0.0	20.0	0.0	0.0	-21.9
268	425716.98	5409561.66	261.97	0	DEN	500	62.6	22.3	0.0	0.0	0.0	80.9	6.0	-1.8	0.0	0.0	20.0	0.0	0.0	-20.2
268	425716.98	5409561.66	261.97	0	DEN	1000	68.1	22.3	0.0	0.0	0.0	80.9	11.5	-1.8	0.0	0.0	20.0	0.0	0.0	-20.1
268	425716.98	5409561.66	261.97	0	DEN	2000	67.0	22.3	0.0	0.0	0.0	80.9	30.3	-1.8	0.0	0.0	20.0	0.0	0.0	-40.0
268	425716.98	5409561.66	261.97	0	DEN	4000	59.5	22.3	0.0	0.0	0.0	80.9	102.7	-1.8	0.0	0.0	20.0	0.0	0.0	-120.0
268	425716.98	5409561.66	261.97	0	DEN	8000	50.7	22.3	0.0	0.0	0.0	80.9	366.4	-1.8	0.0	0.0	20.0	0.0	0.0	-392.4
269	426087.88	5409382.57	342.63	0	DEN	32	20.2	21.2	0.0	0.0	0.0	79.9	0.1	-5.7	0.0	0.0	4.8	0.0	0.0	-37.6
269	426087.88	5409382.57	342.63	0	DEN	63	38.7	21.2	0.0	0.0	0.0	79.9	0.3	-5.7	0.0	0.0	4.8	0.0	0.0	-19.4
269	426087.88	5409382.57	342.63	0	DEN	125	54.6	21.2	0.0	0.0	0.0	79.9	1.1	2.1	0.0	0.0	2.6	0.0	0.0	-10.0
269	426087.88	5409382.57	342.63	0	DEN	250	59.5	21.2	0.0	0.0	0.0	79.9	2.9	-0.3	0.0	0.0	4.8	0.0	0.0	-6.5
269	426087.88	5409382.57	342.63	0	DEN	500	62.6	21.2	0.0	0.0	0.0	79.9	5.4	-1.7	0.0	0.0	4.8	0.0	0.0	-4.5
269	426087.88	5409382.57	342.63	0	DEN	1000	68.1	21.2	0.0	0.0	0.0	79.9	10.2	-1.7	0.0	0.0	4.8	0.0	0.0	-3.8
269	426087.88	5409382.57	342.63	0	DEN	2000	67.0	21.2	0.0	0.0	0.0	79.9	26.9	-1.7	0.0	0.0	4.8	0.0	0.0	-21.7
269	426087.88	5409382.57	342.63	0	DEN	4000	59.5	21.2	0.0	0.0	0.0	79.9	91.3	-1.7	0.0	0.0	4.9	0.0	0.0	-93.7
269	426087.88	5409382.57	342.63	0	DEN	8000	50.7	21.2	0.0	0.0	0.0	79.9	325.7	-1.7	0.0	0.0	5.1	0.0	0.0	-337.0
270	425455.23	5409792.68	252.00	0	DEN	32	20.2	23.0	0.0	0.0	0.0	81.8	0.1	-5.8	0.0	0.0	17.5	0.0	0.0	-50.3
270	425455.23	5409792.68	252.00	0	DEN	63	38.7	23.0	0.0	0.0	0.0	81.8	0.4	-5.8	0.0	0.0	20.7	0.0	0.0	-35.3
270	425455.23	5409792.68	252.00	0	DEN	125	54.6	23.0	0.0	0.0	0.0	81.8	1.4	1.8	0.0	0.0	21.8	0.0	0.0	-29.2
270	425455.23	5409792.68	252.00	0	DEN	250	59.5	23.0	0.0	0.0	0.0	81.8	3.6	-0.6	0.0	0.0	25.0	0.0	0.0	-27.2
270	425455.23	5409792.68	252.00	0	DEN	500	62.6	23.0	0.0	0.0	0.0	81.8	6.7	-2.0	0.0	0.0	25.0	0.0	0.0	-25.8
270	425455.23	5409792.68	252.00	0	DEN	1000	68.1	23.0	0.0	0.0	0.0	81.8	12.7	-2.0	0.0	0.0	25.0	0.0	0.0	-26.3
270	425455.23	5409792.68	252.00	0	DEN	2000	67.0	23.0	0.0	0.0	0.0	81.8	33.6	-2.0	0.0	0.0	25.0	0.0	0.0	-48.3
270	425455.23	5409792.68	252.00	0	DEN	4000	59.5	23.0	0.0	0.0	0.0	81.8	113.8	-2.0	0.0	0.0	25.0	0.0	0.0	-136.0
270	425455.23	5409792.68	252.00	0	DEN	8000	50.7	23.0	0.0	0.0	0.0	81.8	405.9	-2.0	0.0	0.0	25.0	0.0	0.0	-436.9
271	426583.83	5409889.11	381.50	0	DEN	32	20.2	21.9	0.0	0.0	0.0	80.7	0.1	-5.8	0.0	0.0	4.8	0.0	0.0	-37.7
271	426583.83	5409889.11	381.50	0	DEN	63	38.7	21.9	0.0	0.0	0.0	80.7	0.4	-5.8	0.0	0.0	4.8	0.0	0.0	-19.5
271	426583.83	5409889.11	381.50	0	DEN	125	54.6	21.9	0.0	0.0	0.0	80.7	1.3	1.6	0.0	0.0	3.2	0.0	0.0	-10.2
271	426583.83	5409889.11	381.50	0	DEN	250	59.5	21.9	0.0	0.0	0.0	80.7	3.2	-0.9	0.0	0.0	4.8	0.0	0.0	-6.3
271	426583.83	5409889.11	381.50	0	DEN	500	62.6	21.9	0.0	0.0	0.0	80.7	5.9	-2.3	0.0	0.0	4.8	0.0	0.0	-4.6
271	426583.83	5409889.11	381.50	0	DEN	1000	68.1	21.9	0.0	0.0	0.0	80.7	11.2	-2.3	0.0	0.0	4.8	0.0	0.0	-4.4
271	426583.83	5409889.11	381.50	0	DEN	2000	67.0	21.9	0.0	0.0	0.0	80.7	29.6	-2.3	0.0	0.0	4.8	0.0	0.0	-23.8
271	426583.83	5409889.11	381.50	0	DEN	4000	59.5	21.9	0.0	0.0	0.0	80.7	100.3	-2.3	0.0	0.0	4.8	0.0	0.0	-102.1
271	426583.83	5409889.11	381.50	0	DEN	8000	50.7	21.9	0.0	0.0	0.0	80.7	357.9	-2.3	0.0	0.0	4.8	0.0	0.0	-368.5
275	425632.20	5409752.41	250.04	0	DEN	32	20.2	22.5	0.0	0.0	0.0	81.5	0.1	-5.8	0.0	0.0	9.1	0.0	0.0	-42.2
275	425632.20	5409752.41	250.04	0	DEN	63	38.7	22.5	0.0	0.0	0.0	81.5	0.4	-5.8	0.0	0.0	12.4	0.0	0.0	-27.3
275	425632.20	5409752.41	250.04	0	DEN	125	54.6	22.5	0.0	0.0	0.0	81.5	1.4	1.9	0.0	0.0	14.4	0.0	0.0	-22.0
275	425632.20	5409752.41	250.04	0	DEN	250	59.5	22.5	0.0	0.0	0.0	81.5	3.5	-0.6	0.0	0.0	19.8	0.0	0.0	-22.2
275	425632.20	5409752.41	250.04	0	DEN	500	62.6	22.5	0.0	0.0	0.0	81.5	6.4	-2.0	0.0	0.0	23.0	0.0	0.0	-23.8
275	425632.20	5409752.41	250.04	0	DEN	1000	68.1	22.5	0.0	0.0	0.0	81.5	12.2	-2.0	0.0	0.0	25.0	0.0	0.0	-26.1
275	425632.20	5409752.41	250.04	0	DEN	2000	67.0	22.5	0.0	0.0	0.0	81.5	32.3	-2.0	0.0	0.0	25.0	0.0	0.0	-47.3
275	425632.20	5409752.41	250.04	0	DEN	4000	59.5	22.5	0.0	0.0	0.0	81.5	109.5	-2.0	0.0	0.0	25.0	0.0	0.0	-132.0
275	425632.20	5409752.41	250.04	0	DEN	8000	50.7	22.5	0.0	0.0	0.0	81.5	390.5	-2.0	0.0	0.0	25.0	0.0	0.0	-421.8
314	425751.95	5409649.62	247.87	0	DEN	32	20.2	21.6	0.0	0.0	0.0	81.1	0.1	-5.8	0.0	0.0	7.0	0.0	0.0	-40.5
314	425751.95	5409649.62	247.87	0	DEN	63	38.7	21.6	0.0	0.0	0.0	81.1	0.4	-5.8	0.0	0.0	8.5	0.0	0.0	-23.8
314	425751.95	5409649.62	247.87	0	DEN	125	54.6	21.6	0.0	0.0	0.0	81.1	1.3	2.0	0.0	0.0	8.5	0.0	0.0	-16.5
314	425751.95	5409649.62	247.87	0	DEN	250	59.5	21.6	0.0	0.0	0.0	81.1	3.3	-0.5	0.0	0.0	12.8	0.0	0.0	-15.5
314	425751.95	5409649.62	247.87	0	DEN	500	62.6	21.6	0.0	0.0	0.0	81.1	6.1	-1.9	0.0	0.0	15.4	0.0	0.0	-16.5
314	425751.95	5409649.62	247.87	0	DEN	1000	68.1	21.6	0.0	0.0	0.0	81.1	11.7	-1.9	0.0	0.0	18.3	0.0	0.0	-19.4
314	425751.95	5409649.62	247.87	0	DEN	2000	67.0	21.6	0.0	0.0	0.0	81.1	30.8	-1.9	0.0	0.0	21.2	0.0	0.0	-42.5
314	425751.95	5409649.62	247.87	0	DEN	4000	59.5	21.6	0.0	0.0	0.0	81.1	104.5	-1.9	0.0	0.0	24.1	0.0	0.0	-126.7
314	425751.95	5409649.62	247.87	0	DEN	8000	50.7	21.6	0.0	0.0	0.0	81.1	372.8	-1.9	0.0	0.0	25.0	0.0	0.0	-404.6
322	425358.79	5409535.17	277.40	0	DEN	32	20.2	21.7	0.0	0.0	0.0	81.4	0.1	-5.8	0.0	0.0	5.1	0.0	0.0	-38.9
322	425358.79	5409535.17	277.40	0	DEN	63	38.7	21.7	0.0	0.0	0.0	81.4	0.4	-5.8	0.0	0.0	5.4	0.0	0.0	-21.1
322	425358.79	5409535.17	277.40	0	DEN	125	54.6	21.7	0.0	0.0	0.0	81.4	1.4	2.1	0.0	0.0	3.9	0.0	0.0	-12.4
322	425358.79	5409535.17	277.40	0	DEN	250	59.5	21.7	0.0	0.0	0.0	81.4	3.5	-0.4	0.0	0.0	6.9	0.0	0.0	-10.2
322	425358.79	5409535.17	277.40	0	DEN	500	62.6	21.7	0.0	0.0	0.0	81.4	6.4	-1.8	0.0	0.0	8.4	0.0	0.0	-10.1
322	425358.79	5409535.17	277.40	0	DEN	1000	68.1	21.7	0.0	0.0	0.0	81.4	12.2	-1.8	0.0	0.0	10.3	0.0	0.0	-12.3
322	425358.79	5409535.17	277.40	0	DEN	2000	67.0	21.7	0.0	0.0	0.0	81.4	32.1	-1.8	0.0	0.0	12.6	0.0	0.0	-35.7
322	425358.79	5409535.17	277.40	0	DEN	4000	59.5	21.7	0.0	0.0	0.0	81.4	109.0	-1.8	0.0	0.0	15.3	0.0	0.0	-122.7
322	425358.79	5409535.17	277.40	0	DEN	8000	50.7	21.7	0.0	0.0	0.0	81.4	388.6	-1.8	0.0	0.0	18.1	0.0	0.0	-413.9

Line Source, ISO 9613, Name: "WTR_OPMill", ID: ""																					
Nr.	X	Y	Z	Refl.	DEN	Freq.	Lw	l/a	Optime	K0	Dc	Adiv	Aatm	Agr	Afol	Ahous	Abar	Cmet	RL	Lr
	(m)	(m)	(m)			(Hz)	dB(A)	dB	dB	(dB)	(dB)	(dB)	(dB)	(dB)	(dB)	(dB)	(dB)	(dB)	(dB)	dB(A)
324	425307.93	5409669.75	264.69	0	DEN	32	20.2	22.1	0.0	0.0	0.0	81.8	0.1	-5.8	0.0	0.0	4.8	0.0	0.0	-38.6
324	425307.93	5409669.75	264.69	0	DEN	63	38.7	22.1	0.0	0.0	0.0	81.8	0.4	-5.8	0.0	0.0	4.8	0.0	0.0	-20.4
324	425307.93	5409669.75	264.69	0	DEN	125	54.6	22.1	0.0	0.0	0.0	81.8	1.4	1.9	0.0	0.0	2.9	0.0	0.0	-11.3
324	425307.93	5409669.75	264.69	0	DEN	250	59.5	22.1	0.0	0.0	0.0	81.8	3.6	-0.5	0.0	0.0	4.9	0.0	0.0	-8.1
324	425307.93	5409669.75	264.69	0	DEN	500	62.6	22.1	0.0	0.0	0.0	81.8	6.7	-1.9	0.0	0.0	4.9	0.0	0.0	-6.8
324	425307.93	5409669.75	264.69	0	DEN	1000	68.1	22.1	0.0	0.0	0.0	81.8	12.7	-1.9	0.0	0.0	5.1	0.0	0.0	-7.4
324	425307.93	5409669.75	264.69	0	DEN	2000	67.0	22.1	0.0	0.0	0.0	81.8	33.5	-1.9	0.0	0.0	5.4	0.0	0.0	-29.6
324	425307.93	5409669.75	264.69	0	DEN	4000	59.5	22.1	0.0	0.0	0.0	81.8	113.4	-1.9	0.0	0.0	6.0	0.0	0.0	-117.6
324	425307.93	5409669.75	264.69	0	DEN	8000	50.7	22.1	0.0	0.0	0.0	81.8	404.6	-1.9	0.0	0.0	6.9	0.0	0.0	-418.6
331	425373.63	5409676.11	281.78	0	DEN	32	20.2	21.8	0.0	0.0	0.0	81.7	0.1	-5.8	0.0	0.0	19.8	0.0	0.0	-53.7
331	425373.63	5409676.11	281.78	0	DEN	63	38.7	21.8	0.0	0.0	0.0	81.7	0.4	-5.8	0.0	0.0	23.6	0.0	0.0	-39.4
331	425373.63	5409676.11	281.78	0	DEN	125	54.6	21.8	0.0	0.0	0.0	81.7	1.4	1.9	0.0	0.0	23.1	0.0	0.0	-31.6
331	425373.63	5409676.11	281.78	0	DEN	250	59.5	21.8	0.0	0.0	0.0	81.7	3.6	-0.5	0.0	0.0	25.0	0.0	0.0	-28.3
331	425373.63	5409676.11	281.78	0	DEN	500	62.6	21.8	0.0	0.0	0.0	81.7	6.6	-1.9	0.0	0.0	25.0	0.0	0.0	-26.9
331	425373.63	5409676.11	281.78	0	DEN	1000	68.1	21.8	0.0	0.0	0.0	81.7	12.5	-1.9	0.0	0.0	25.0	0.0	0.0	-27.3
331	425373.63	5409676.11	281.78	0	DEN	2000	67.0	21.8	0.0	0.0	0.0	81.7	33.1	-1.9	0.0	0.0	25.0	0.0	0.0	-49.0
331	425373.63	5409676.11	281.78	0	DEN	4000	59.5	21.8	0.0	0.0	0.0	81.7	112.3	-1.9	0.0	0.0	25.0	0.0	0.0	-135.7
331	425373.63	5409676.11	281.78	0	DEN	8000	50.7	21.8	0.0	0.0	0.0	81.7	400.5	-1.9	0.0	0.0	25.0	0.0	0.0	-432.6
352	425413.90	5409600.87	235.41	0	DEN	32	20.2	20.9	0.0	0.0	0.0	81.5	0.1	-5.8	0.0	0.0	23.3	0.0	0.0	-58.0
352	425413.90	5409600.87	235.41	0	DEN	63	38.7	20.9	0.0	0.0	0.0	81.5	0.4	-5.8	0.0	0.0	25.0	0.0	0.0	-41.5
352	425413.90	5409600.87	235.41	0	DEN	125	54.6	20.9	0.0	0.0	0.0	81.5	1.4	2.0	0.0	0.0	23.0	0.0	0.0	-32.4
352	425413.90	5409600.87	235.41	0	DEN	250	59.5	20.9	0.0	0.0	0.0	81.5	3.5	-0.4	0.0	0.0	25.0	0.0	0.0	-29.1
352	425413.90	5409600.87	235.41	0	DEN	500	62.6	20.9	0.0	0.0	0.0	81.5	6.4	-1.8	0.0	0.0	25.0	0.0	0.0	-27.6
352	425413.90	5409600.87	235.41	0	DEN	1000	68.1	20.9	0.0	0.0	0.0	81.5	12.2	-1.8	0.0	0.0	25.0	0.0	0.0	-27.9
352	425413.90	5409600.87	235.41	0	DEN	2000	67.0	20.9	0.0	0.0	0.0	81.5	32.3	-1.8	0.0	0.0	25.0	0.0	0.0	-49.0
352	425413.90	5409600.87	235.41	0	DEN	4000	59.5	20.9	0.0	0.0	0.0	81.5	109.6	-1.8	0.0	0.0	25.0	0.0	0.0	-133.8
352	425413.90	5409600.87	235.41	0	DEN	8000	50.7	20.9	0.0	0.0	0.0	81.5	390.8	-1.8	0.0	0.0	25.0	0.0	0.0	-423.8
358	426188.55	5409404.82	352.74	0	DEN	32	20.2	19.1	0.0	0.0	0.0	79.8	0.1	-5.7	0.0	0.0	4.8	0.0	0.0	-39.6
358	426188.55	5409404.82	352.74	0	DEN	63	38.7	19.1	0.0	0.0	0.0	79.8	0.3	-5.7	0.0	0.0	4.8	0.0	0.0	-21.4
358	426188.55	5409404.82	352.74	0	DEN	125	54.6	19.1	0.0	0.0	0.0	79.8	1.1	2.2	0.0	0.0	2.6	0.0	0.0	-12.0
358	426188.55	5409404.82	352.74	0	DEN	250	59.5	19.1	0.0	0.0	0.0	79.8	2.9	-0.3	0.0	0.0	4.8	0.0	0.0	-8.6
358	426188.55	5409404.82	352.74	0	DEN	500	62.6	19.1	0.0	0.0	0.0	79.8	5.3	-1.7	0.0	0.0	4.9	0.0	0.0	-6.6
358	426188.55	5409404.82	352.74	0	DEN	1000	68.1	19.1	0.0	0.0	0.0	79.8	10.1	-1.7	0.0	0.0	5.0	0.0	0.0	-5.9
358	426188.55	5409404.82	352.74	0	DEN	2000	67.0	19.1	0.0	0.0	0.0	79.8	26.7	-1.7	0.0	0.0	5.2	0.0	0.0	-23.8
358	426188.55	5409404.82	352.74	0	DEN	4000	59.5	19.1	0.0	0.0	0.0	79.8	90.4	-1.7	0.0	0.0	5.5	0.0	0.0	-95.4
358	426188.55	5409404.82	352.74	0	DEN	8000	50.7	19.1	0.0	0.0	0.0	79.8	322.4	-1.7	0.0	0.0	6.1	0.0	0.0	-336.8
401	425425.56	5409721.68	359.01	0	DEN	32	20.2	19.8	0.0	0.0	0.0	81.7	0.1	-5.8	0.0	0.0	4.8	0.0	0.0	-40.8
401	425425.56	5409721.68	359.01	0	DEN	63	38.7	19.8	0.0	0.0	0.0	81.7	0.4	-5.8	0.0	0.0	4.8	0.0	0.0	-22.6
401	425425.56	5409721.68	359.01	0	DEN	125	54.6	19.8	0.0	0.0	0.0	81.7	1.4	1.9	0.0	0.0	2.9	0.0	0.0	-13.5
401	425425.56	5409721.68	359.01	0	DEN	250	59.5	19.8	0.0	0.0	0.0	81.7	3.6	-0.6	0.0	0.0	4.8	0.0	0.0	-10.2
401	425425.56	5409721.68	359.01	0	DEN	500	62.6	19.8	0.0	0.0	0.0	81.7	6.6	-2.0	0.0	0.0	4.8	0.0	0.0	-8.7
401	425425.56	5409721.68	359.01	0	DEN	1000	68.1	19.8	0.0	0.0	0.0	81.7	12.5	-2.0	0.0	0.0	4.8	0.0	0.0	-9.1
401	425425.56	5409721.68	359.01	0	DEN	2000	67.0	19.8	0.0	0.0	0.0	81.7	33.2	-2.0	0.0	0.0	4.8	0.0	0.0	-30.8
401	425425.56	5409721.68	359.01	0	DEN	4000	59.5	19.8	0.0	0.0	0.0	81.7	112.4	-2.0	0.0	0.0	4.8	0.0	0.0	-117.6
401	425425.56	5409721.68	359.01	0	DEN	8000	50.7	19.8	0.0	0.0	0.0	81.7	401.0	-2.0	0.0	0.0	4.8	0.0	0.0	-415.0
438	425330.18	5409769.36	259.98	0	DEN	32	20.2	18.0	0.0	0.0	0.0	81.9	0.1	-5.8	0.0	0.0	16.6	0.0	0.0	-54.7
438	425330.18	5409769.36	259.98	0	DEN	63	38.7	18.0	0.0	0.0	0.0	81.9	0.4	-5.8	0.0	0.0	20.0	0.0	0.0	-39.9
438	425330.18	5409769.36	259.98	0	DEN	125	54.6	18.0	0.0	0.0	0.0	81.9	1.4	1.8	0.0	0.0	21.2	0.0	0.0	-33.8
438	425330.18	5409769.36	259.98	0	DEN	250	59.5	18.0	0.0	0.0	0.0	81.9	3.7	-0.6	0.0	0.0	25.0	0.0	0.0	-32.5
438	425330.18	5409769.36	259.98	0	DEN	500	62.6	18.0	0.0	0.0	0.0	81.9	6.8	-2.0	0.0	0.0	25.0	0.0	0.0	-31.1
438	425330.18	5409769.36	259.98	0	DEN	1000	68.1	18.0	0.0	0.0	0.0	81.9	12.9	-2.0	0.0	0.0	25.0	0.0	0.0	-31.7
438	425330.18	5409769.36	259.98	0	DEN	2000	67.0	18.0	0.0	0.0	0.0	81.9	34.1	-2.0	0.0	0.0	25.0	0.0	0.0	-54.0
438	425330.18	5409769.36	259.98	0	DEN	4000	59.5	18.0	0.0	0.0	0.0	81.9	115.6	-2.0	0.0	0.0	25.0	0.0	0.0	-143.0
438	425330.18	5409769.36	259.98	0	DEN	8000	50.7	18.0	0.0	0.0	0.0	81.9	412.3	-2.0	0.0	0.0	25.0	0.0	0.0	-448.5

vert. Area Source, ISO 9613, Name: "MB_W-E", ID: ""																					
Nr.	X	Y	Z	Refl.	DEN	Freq.	Lw	l/a	Optime	K0	Dc	Adiv	Aatm	Agr	Afol	Ahous	Abar	Cmet	RL	Lr
	(m)	(m)	(m)			(Hz)	dB(A)	dB	dB	(dB)	(dB)	(dB)	(dB)	(dB)	(dB)	(dB)	(dB)	(dB)	(dB)	dB(A)
439	426648.83	5410965.00	383.50	0	DEN	63	47.0	18.4	0.0	3.0	0.0	83.2	0.5	-5.6	0.0	0.0	4.8	0.0	0.0	-14.5
439	426648.83	5410965.00	383.50	0	DEN	125	55.4	18.4	0.0	3.0	0.0	83.2	1.7	1.2	0.0	0.0	3.6	0.0	0.0	-12.9
439	426648.83	5410965.00	383.50	0	DEN	250	61.7	18.4	0.0	3.0	0.0	83.2	4.3	-1.2	0.0	0.0	4.8	0.0	0.0	-8.0
439	426648.83	5410965.00	383.50	0	DEN	500	62.6	18.4	0.0	3.0	0.0	83.2	7.9	-2.6	0.0	0.0	4.8	0.0	0.0	-9.3
439	426648.83	5410965.00	383.50	0	DEN	1000	63.5	18.4	0.0	3.0	0.0	83.2	15.0	-2.6	0.0	0.0	4.8	0.0	0.0	-15.5

vert. Area Source, ISO 9613, Name: "MB_W-E", ID: ""																					
Nr.	X	Y	Z	Refl.	DEN	Freq.	Lw	l/a	Optime	K0	Dc	Adiv	Aatm	Agr	Afol	Ahous	Abar	Cmet	RL	Lr
	(m)	(m)	(m)			(Hz)	dB(A)	dB	dB	(dB)	(dB)	(dB)	(dB)	(dB)	(dB)	(dB)	(dB)	(dB)	(dB)	dB(A)
439	426648.83	5410965.00	383.50	0	DEN	2000	62.4	18.4	0.0	3.0	0.0	83.2	39.5	-2.6	0.0	0.0	4.8	0.0	0.0	-41.1
439	426648.83	5410965.00	383.50	0	DEN	4000	61.0	18.4	0.0	3.0	0.0	83.2	134.1	-2.6	0.0	0.0	4.8	0.0	0.0	-137.1
439	426648.83	5410965.00	383.50	0	DEN	8000	56.8	18.4	0.0	3.0	0.0	83.2	478.3	-2.6	0.0	0.0	4.8	0.0	0.0	-485.5
440	426648.83	5410965.00	370.50	0	DEN	63	47.0	18.4	0.0	3.0	0.0	83.2	0.5	-5.9	0.0	0.0	4.8	0.0	0.0	-14.3
440	426648.83	5410965.00	370.50	0	DEN	125	55.4	18.4	0.0	3.0	0.0	83.2	1.7	0.9	0.0	0.0	3.9	0.0	0.0	-12.9
440	426648.83	5410965.00	370.50	0	DEN	250	61.7	18.4	0.0	3.0	0.0	83.2	4.3	-1.5	0.0	0.0	4.8	0.0	0.0	-7.7
440	426648.83	5410965.00	370.50	0	DEN	500	62.6	18.4	0.0	3.0	0.0	83.2	7.9	-2.9	0.0	0.0	4.8	0.0	0.0	-9.0
440	426648.83	5410965.00	370.50	0	DEN	1000	63.5	18.4	0.0	3.0	0.0	83.2	15.0	-2.9	0.0	0.0	4.8	0.0	0.0	-15.2
440	426648.83	5410965.00	370.50	0	DEN	2000	62.4	18.4	0.0	3.0	0.0	83.2	39.5	-2.9	0.0	0.0	4.8	0.0	0.0	-40.9
440	426648.83	5410965.00	370.50	0	DEN	4000	61.0	18.4	0.0	3.0	0.0	83.2	134.1	-2.9	0.0	0.0	4.8	0.0	0.0	-136.8
440	426648.83	5410965.00	370.50	0	DEN	8000	56.8	18.4	0.0	3.0	0.0	83.2	478.3	-2.9	0.0	0.0	4.8	0.0	0.0	-485.2
441	426648.83	5410965.00	384.50	0	DEN	63	47.0	18.4	0.0	3.0	0.0	83.2	0.5	-5.6	0.0	0.0	4.8	0.0	0.0	-14.6
441	426648.83	5410965.00	384.50	0	DEN	125	55.4	18.4	0.0	3.0	0.0	83.2	1.7	1.2	0.0	0.0	3.5	0.0	0.0	-12.9
441	426648.83	5410965.00	384.50	0	DEN	250	61.7	18.4	0.0	3.0	0.0	83.2	4.3	-1.2	0.0	0.0	4.8	0.0	0.0	-8.0
441	426648.83	5410965.00	384.50	0	DEN	500	62.6	18.4	0.0	3.0	0.0	83.2	7.9	-2.6	0.0	0.0	4.8	0.0	0.0	-9.3
441	426648.83	5410965.00	384.50	0	DEN	1000	63.5	18.4	0.0	3.0	0.0	83.2	15.0	-2.6	0.0	0.0	4.8	0.0	0.0	-15.5
441	426648.83	5410965.00	384.50	0	DEN	2000	62.4	18.4	0.0	3.0	0.0	83.2	39.5	-2.6	0.0	0.0	4.8	0.0	0.0	-41.2
441	426648.83	5410965.00	384.50	0	DEN	4000	61.0	18.4	0.0	3.0	0.0	83.2	134.1	-2.6	0.0	0.0	4.8	0.0	0.0	-137.1
441	426648.83	5410965.00	384.50	0	DEN	8000	56.8	18.4	0.0	3.0	0.0	83.2	478.3	-2.6	0.0	0.0	4.8	0.0	0.0	-485.5
442	426648.83	5410965.00	385.50	0	DEN	63	47.0	18.4	0.0	3.0	0.0	83.2	0.5	-5.5	0.0	0.0	4.8	0.0	0.0	-14.6
442	426648.83	5410965.00	385.50	0	DEN	125	55.4	18.4	0.0	3.0	0.0	83.2	1.7	1.2	0.0	0.0	3.5	0.0	0.0	-12.9
442	426648.83	5410965.00	385.50	0	DEN	250	61.7	18.4	0.0	3.0	0.0	83.2	4.3	-1.2	0.0	0.0	4.8	0.0	0.0	-8.0
442	426648.83	5410965.00	385.50	0	DEN	500	62.6	18.4	0.0	3.0	0.0	83.2	7.9	-2.6	0.0	0.0	4.8	0.0	0.0	-9.3
442	426648.83	5410965.00	385.50	0	DEN	1000	63.5	18.4	0.0	3.0	0.0	83.2	15.0	-2.6	0.0	0.0	4.8	0.0	0.0	-15.5
442	426648.83	5410965.00	385.50	0	DEN	2000	62.4	18.4	0.0	3.0	0.0	83.2	39.5	-2.6	0.0	0.0	4.8	0.0	0.0	-41.2
442	426648.83	5410965.00	385.50	0	DEN	4000	61.0	18.4	0.0	3.0	0.0	83.2	134.1	-2.6	0.0	0.0	4.8	0.0	0.0	-137.1
442	426648.83	5410965.00	385.50	0	DEN	8000	56.8	18.4	0.0	3.0	0.0	83.2	478.3	-2.6	0.0	0.0	4.8	0.0	0.0	-485.5
443	426648.83	5410965.00	371.50	0	DEN	63	47.0	18.4	0.0	3.0	0.0	83.2	0.5	-5.8	0.0	0.0	4.8	0.0	0.0	-14.3
443	426648.83	5410965.00	371.50	0	DEN	125	55.4	18.4	0.0	3.0	0.0	83.2	1.7	0.9	0.0	0.0	3.8	0.0	0.0	-12.9
443	426648.83	5410965.00	371.50	0	DEN	250	61.7	18.4	0.0	3.0	0.0	83.2	4.3	-1.5	0.0	0.0	4.8	0.0	0.0	-7.7
443	426648.83	5410965.00	371.50	0	DEN	500	62.6	18.4	0.0	3.0	0.0	83.2	7.9	-2.9	0.0	0.0	4.8	0.0	0.0	-9.0
443	426648.83	5410965.00	371.50	0	DEN	1000	63.5	18.4	0.0	3.0	0.0	83.2	15.0	-2.9	0.0	0.0	4.8	0.0	0.0	-15.2
443	426648.83	5410965.00	371.50	0	DEN	2000	62.4	18.4	0.0	3.0	0.0	83.2	39.5	-2.9	0.0	0.0	4.8	0.0	0.0	-40.9
443	426648.83	5410965.00	371.50	0	DEN	4000	61.0	18.4	0.0	3.0	0.0	83.2	134.1	-2.9	0.0	0.0	4.8	0.0	0.0	-136.8
443	426648.83	5410965.00	371.50	0	DEN	8000	56.8	18.4	0.0	3.0	0.0	83.2	478.3	-2.9	0.0	0.0	4.8	0.0	0.0	-485.2
444	426648.83	5410965.00	377.50	0	DEN	63	47.0	18.4	0.0	3.0	0.0	83.2	0.5	-5.7	0.0	0.0	4.8	0.0	0.0	-14.4
444	426648.83	5410965.00	377.50	0	DEN	125	55.4	18.4	0.0	3.0	0.0	83.2	1.7	1.1	0.0	0.0	3.7	0.0	0.0	-12.9
444	426648.83	5410965.00	377.50	0	DEN	250	61.7	18.4	0.0	3.0	0.0	83.2	4.3	-1.4	0.0	0.0	4.8	0.0	0.0	-7.8
444	426648.83	5410965.00	377.50	0	DEN	500	62.6	18.4	0.0	3.0	0.0	83.2	7.9	-2.8	0.0	0.0	4.8	0.0	0.0	-9.2
444	426648.83	5410965.00	377.50	0	DEN	1000	63.5	18.4	0.0	3.0	0.0	83.2	15.0	-2.8	0.0	0.0	4.8	0.0	0.0	-15.3
444	426648.83	5410965.00	377.50	0	DEN	2000	62.4	18.4	0.0	3.0	0.0	83.2	39.5	-2.8	0.0	0.0	4.8	0.0	0.0	-41.0
444	426648.83	5410965.00	377.50	0	DEN	4000	61.0	18.4	0.0	3.0	0.0	83.2	134.1	-2.8	0.0	0.0	4.8	0.0	0.0	-137.0
444	426648.83	5410965.00	377.50	0	DEN	8000	56.8	18.4	0.0	3.0	0.0	83.2	478.3	-2.8	0.0	0.0	4.8	0.0	0.0	-485.4
445	426648.83	5410965.00	379.50	0	DEN	63	47.0	18.4	0.0	3.0	0.0	83.2	0.5	-5.7	0.0	0.0	4.8	0.0	0.0	-14.4
445	426648.83	5410965.00	379.50	0	DEN	125	55.4	18.4	0.0	3.0	0.0	83.2	1.7	1.1	0.0	0.0	3.7	0.0	0.0	-12.9
445	426648.83	5410965.00	379.50	0	DEN	250	61.7	18.4	0.0	3.0	0.0	83.2	4.3	-1.3	0.0	0.0	4.8	0.0	0.0	-7.9
445	426648.83	5410965.00	379.50	0	DEN	500	62.6	18.4	0.0	3.0	0.0	83.2	7.9	-2.7	0.0	0.0	4.8	0.0	0.0	-9.2
445	426648.83	5410965.00	379.50	0	DEN	1000	63.5	18.4	0.0	3.0	0.0	83.2	15.0	-2.7	0.0	0.0	4.8	0.0	0.0	-15.4
445	426648.83	5410965.00	379.50	0	DEN	2000	62.4	18.4	0.0	3.0	0.0	83.2	39.5	-2.7	0.0	0.0	4.8	0.0	0.0	-41.1
445	426648.83	5410965.00	379.50	0	DEN	4000	61.0	18.4	0.0	3.0	0.0	83.2	134.1	-2.7	0.0	0.0	4.8	0.0	0.0	-137.0
445	426648.83	5410965.00	379.50	0	DEN	8000	56.8	18.4	0.0	3.0	0.0	83.2	478.3	-2.7	0.0	0.0	4.8	0.0	0.0	-485.4
446	426648.83	5410965.00	380.50	0	DEN	63	47.0	18.4	0.0	3.0	0.0	83.2	0.5	-5.6	0.0	0.0	4.8	0.0	0.0	-14.5
446	426648.83	5410965.00	380.50	0	DEN	125	55.4	18.4	0.0	3.0	0.0	83.2	1.7	1.1	0.0	0.0	3.6	0.0	0.0	-12.9
446	426648.83	5410965.00	380.50	0	DEN	250	61.7	18.4	0.0	3.0	0.0	83.2	4.3	-1.3	0.0	0.0	4.8	0.0	0.0	-7.9
446	426648.83	5410965.00	380.50	0	DEN	500	62.6	18.4	0.0	3.0	0.0	83.2	7.9	-2.7	0.0	0.0	4.8	0.0	0.0	-9.2
446	426648.83	5410965.00	380.50	0	DEN	1000	63.5	18.4	0.0	3.0	0.0	83.2	15.0	-2.7	0.0	0.0	4.8	0.0	0.0	-15.4
446	426648.83	5410965.00	380.50	0	DEN	2000	62.4	18.4	0.0	3.0	0.0	83.2	39.5	-2.7	0.0	0.0	4.8	0.0	0.0	-41.1
446	426648.83	5410965.00	380.50	0	DEN	4000	61.0	18.4	0.0	3.0	0.0	83.2	134.1	-2.7	0.0	0.0	4.8	0.0	0.0	-137.0
446	426648.83	5410965.00	380.50	0	DEN	8000	56.8	18.4	0.0	3.0	0.0	83.2	478.3	-2.7	0.0	0.0	4.8	0.0	0.0	-485.4
447	426648.83	5410965.00	381.50	0	DEN	63	47.0	18.4	0.0	3.0	0.0	83.2	0.5	-5.6	0.0	0.0	4.8	0.0	0.0	-14.5
447	426648.83	5410965.00	381.50	0	DEN	125	55.4	18.4	0.0	3.0	0.0	83.2	1.7	1.2	0.0	0.0	3.6	0.0	0.0	-12.9
447	426648.83	5410965.00	381.50	0	DEN	250	61.7	18.4	0.0	3.0	0.0	83.2	4.3	-1.3	0.0	0.0	4.8	0.0	0.0	-7.9
447	426648.83	5410965.00	381.50	0	DEN	500	62.6	18.4	0.0	3.0	0.0	83.2	7.9	-2.7	0.0	0.0	4.8	0.0	0.0	-9.2

vert. Area Source, ISO 9613, Name: "MB_W-E", ID: ""																					
Nr.	X	Y	Z	Refl.	DEN	Freq.	Lw	l/a	Optime	K0	Dc	Adiv	Aatm	Agr	Afol	Ahous	Abar	Cmet	RL	Lr
	(m)	(m)	(m)			(Hz)	dB(A)	dB	dB	(dB)	(dB)	(dB)	(dB)	(dB)	(dB)	(dB)	(dB)	(dB)	(dB)	dB(A)
447	426648.83	5410965.00	381.50	0	DEN	1000	63.5	18.4	0.0	3.0	0.0	83.2	15.0	-2.7	0.0	0.0	4.8	0.0	0.0	-15.4
447	426648.83	5410965.00	381.50	0	DEN	2000	62.4	18.4	0.0	3.0	0.0	83.2	39.5	-2.7	0.0	0.0	4.8	0.0	0.0	-41.1
447	426648.83	5410965.00	381.50	0	DEN	4000	61.0	18.4	0.0	3.0	0.0	83.2	134.1	-2.7	0.0	0.0	4.8	0.0	0.0	-137.0
447	426648.83	5410965.00	381.50	0	DEN	8000	56.8	18.4	0.0	3.0	0.0	83.2	478.3	-2.7	0.0	0.0	4.8	0.0	0.0	-485.5
448	426648.83	5410965.00	382.50	0	DEN	63	47.0	18.4	0.0	3.0	0.0	83.2	0.5	-5.6	0.0	0.0	4.8	0.0	0.0	-14.5
448	426648.83	5410965.00	382.50	0	DEN	125	55.4	18.4	0.0	3.0	0.0	83.2	1.7	1.2	0.0	0.0	3.6	0.0	0.0	-12.9
448	426648.83	5410965.00	382.50	0	DEN	250	61.7	18.4	0.0	3.0	0.0	83.2	4.3	-1.3	0.0	0.0	4.8	0.0	0.0	-7.9
448	426648.83	5410965.00	382.50	0	DEN	500	62.6	18.4	0.0	3.0	0.0	83.2	7.9	-2.6	0.0	0.0	4.8	0.0	0.0	-9.3
448	426648.83	5410965.00	382.50	0	DEN	1000	63.5	18.4	0.0	3.0	0.0	83.2	15.0	-2.7	0.0	0.0	4.8	0.0	0.0	-15.4
448	426648.83	5410965.00	382.50	0	DEN	2000	62.4	18.4	0.0	3.0	0.0	83.2	39.5	-2.7	0.0	0.0	4.8	0.0	0.0	-41.1
448	426648.83	5410965.00	382.50	0	DEN	4000	61.0	18.4	0.0	3.0	0.0	83.2	134.1	-2.7	0.0	0.0	4.8	0.0	0.0	-137.1
448	426648.83	5410965.00	382.50	0	DEN	8000	56.8	18.4	0.0	3.0	0.0	83.2	478.3	-2.7	0.0	0.0	4.8	0.0	0.0	-485.5
449	426648.83	5410965.00	378.50	0	DEN	63	47.0	18.4	0.0	3.0	0.0	83.2	0.5	-5.7	0.0	0.0	4.8	0.0	0.0	-14.4
449	426648.83	5410965.00	378.50	0	DEN	125	55.4	18.4	0.0	3.0	0.0	83.2	1.7	1.1	0.0	0.0	3.7	0.0	0.0	-12.9
449	426648.83	5410965.00	378.50	0	DEN	250	61.7	18.4	0.0	3.0	0.0	83.2	4.3	-1.3	0.0	0.0	4.8	0.0	0.0	-7.8
449	426648.83	5410965.00	378.50	0	DEN	500	62.6	18.4	0.0	3.0	0.0	83.2	7.9	-2.7	0.0	0.0	4.8	0.0	0.0	-9.2
449	426648.83	5410965.00	378.50	0	DEN	1000	63.5	18.4	0.0	3.0	0.0	83.2	15.0	-2.7	0.0	0.0	4.8	0.0	0.0	-15.3
449	426648.83	5410965.00	378.50	0	DEN	2000	62.4	18.4	0.0	3.0	0.0	83.2	39.5	-2.7	0.0	0.0	4.8	0.0	0.0	-41.0
449	426648.83	5410965.00	378.50	0	DEN	4000	61.0	18.4	0.0	3.0	0.0	83.2	134.1	-2.7	0.0	0.0	4.8	0.0	0.0	-137.0
449	426648.83	5410965.00	378.50	0	DEN	8000	56.8	18.4	0.0	3.0	0.0	83.2	478.3	-2.7	0.0	0.0	4.8	0.0	0.0	-485.4
450	426648.83	5410965.00	387.50	0	DEN	63	47.0	18.4	0.0	3.0	0.0	83.2	0.5	-5.5	0.0	0.0	4.8	0.0	0.0	-14.6
450	426648.83	5410965.00	387.50	0	DEN	125	55.4	18.4	0.0	3.0	0.0	83.2	1.7	1.3	0.0	0.0	3.5	0.0	0.0	-12.9
450	426648.83	5410965.00	387.50	0	DEN	250	61.7	18.4	0.0	3.0	0.0	83.2	4.3	-1.2	0.0	0.0	4.8	0.0	0.0	-8.0
450	426648.83	5410965.00	387.50	0	DEN	500	62.6	18.4	0.0	3.0	0.0	83.2	7.9	-2.5	0.0	0.0	4.8	0.0	0.0	-9.4
450	426648.83	5410965.00	387.50	0	DEN	1000	63.5	18.4	0.0	3.0	0.0	83.2	15.0	-2.5	0.0	0.0	4.8	0.0	0.0	-15.5
450	426648.83	5410965.00	387.50	0	DEN	2000	62.4	18.4	0.0	3.0	0.0	83.2	39.5	-2.5	0.0	0.0	4.8	0.0	0.0	-41.2
450	426648.83	5410965.00	387.50	0	DEN	4000	61.0	18.4	0.0	3.0	0.0	83.2	134.1	-2.5	0.0	0.0	4.8	0.0	0.0	-137.2
450	426648.83	5410965.00	387.50	0	DEN	8000	56.8	18.4	0.0	3.0	0.0	83.2	478.3	-2.5	0.0	0.0	4.8	0.0	0.0	-485.6
451	426648.83	5410965.00	376.50	0	DEN	63	47.0	18.4	0.0	3.0	0.0	83.2	0.5	-5.7	0.0	0.0	4.8	0.0	0.0	-14.4
451	426648.83	5410965.00	376.50	0	DEN	125	55.4	18.4	0.0	3.0	0.0	83.2	1.7	1.0	0.0	0.0	3.7	0.0	0.0	-12.9
451	426648.83	5410965.00	376.50	0	DEN	250	61.7	18.4	0.0	3.0	0.0	83.2	4.3	-1.4	0.0	0.0	4.8	0.0	0.0	-7.8
451	426648.83	5410965.00	376.50	0	DEN	500	62.6	18.4	0.0	3.0	0.0	83.2	7.9	-2.8	0.0	0.0	4.8	0.0	0.0	-9.1
451	426648.83	5410965.00	376.50	0	DEN	1000	63.5	18.4	0.0	3.0	0.0	83.2	15.0	-2.8	0.0	0.0	4.8	0.0	0.0	-15.3
451	426648.83	5410965.00	376.50	0	DEN	2000	62.4	18.4	0.0	3.0	0.0	83.2	39.5	-2.8	0.0	0.0	4.8	0.0	0.0	-41.0
451	426648.83	5410965.00	376.50	0	DEN	4000	61.0	18.4	0.0	3.0	0.0	83.2	134.1	-2.8	0.0	0.0	4.8	0.0	0.0	-136.9
451	426648.83	5410965.00	376.50	0	DEN	8000	56.8	18.4	0.0	3.0	0.0	83.2	478.3	-2.8	0.0	0.0	4.8	0.0	0.0	-485.3
452	426648.83	5410965.00	369.50	0	DEN	63	47.0	18.4	0.0	3.0	0.0	83.2	0.5	-5.9	0.0	0.0	4.8	0.0	0.0	-14.2
452	426648.83	5410965.00	369.50	0	DEN	125	55.4	18.4	0.0	3.0	0.0	83.2	1.7	0.9	0.0	0.0	3.9	0.0	0.0	-12.9
452	426648.83	5410965.00	369.50	0	DEN	250	61.7	18.4	0.0	3.0	0.0	83.2	4.3	-1.5	0.0	0.0	4.8	0.0	0.0	-7.6
452	426648.83	5410965.00	369.50	0	DEN	500	62.6	18.4	0.0	3.0	0.0	83.2	7.9	-2.9	0.0	0.0	4.8	0.0	0.0	-9.0
452	426648.83	5410965.00	369.50	0	DEN	1000	63.5	18.4	0.0	3.0	0.0	83.2	15.0	-2.9	0.0	0.0	4.8	0.0	0.0	-15.2
452	426648.83	5410965.00	369.50	0	DEN	2000	62.4	18.4	0.0	3.0	0.0	83.2	39.5	-2.9	0.0	0.0	4.8	0.0	0.0	-40.8
452	426648.83	5410965.00	369.50	0	DEN	4000	61.0	18.4	0.0	3.0	0.0	83.2	134.1	-2.9	0.0	0.0	4.8	0.0	0.0	-136.8
452	426648.83	5410965.00	369.50	0	DEN	8000	56.8	18.4	0.0	3.0	0.0	83.2	478.3	-2.9	0.0	0.0	4.8	0.0	0.0	-485.2
453	426648.83	5410965.00	388.50	0	DEN	63	47.0	18.4	0.0	3.0	0.0	83.2	0.5	-5.5	0.0	0.0	4.8	0.0	0.0	-14.6
453	426648.83	5410965.00	388.50	0	DEN	125	55.4	18.4	0.0	3.0	0.0	83.2	1.7	1.3	0.0	0.0	3.5	0.0	0.0	-12.9
453	426648.83	5410965.00	388.50	0	DEN	250	61.7	18.4	0.0	3.0	0.0	83.2	4.3	-1.1	0.0	0.0	4.8	0.0	0.0	-8.1
453	426648.83	5410965.00	388.50	0	DEN	500	62.6	18.4	0.0	3.0	0.0	83.2	7.9	-2.5	0.0	0.0	4.8	0.0	0.0	-9.4
453	426648.83	5410965.00	388.50	0	DEN	1000	63.5	18.4	0.0	3.0	0.0	83.2	15.0	-2.5	0.0	0.0	4.8	0.0	0.0	-15.6
453	426648.83	5410965.00	388.50	0	DEN	2000	62.4	18.4	0.0	3.0	0.0	83.2	39.5	-2.5	0.0	0.0	4.8	0.0	0.0	-41.2
453	426648.83	5410965.00	388.50	0	DEN	4000	61.0	18.4	0.0	3.0	0.0	83.2	134.1	-2.5	0.0	0.0	4.8	0.0	0.0	-137.2
453	426648.83	5410965.00	388.50	0	DEN	8000	56.8	18.4	0.0	3.0	0.0	83.2	478.3	-2.5	0.0	0.0	4.8	0.0	0.0	-485.6
454	426648.83	5410965.00	374.50	0	DEN	63	47.0	18.4	0.0	3.0	0.0	83.2	0.5	-5.8	0.0	0.0	4.8	0.0	0.0	-14.3
454	426648.83	5410965.00	374.50	0	DEN	125	55.4	18.4	0.0	3.0	0.0	83.2	1.7	1.0	0.0	0.0	3.8	0.0	0.0	-12.9
454	426648.83	5410965.00	374.50	0	DEN	250	61.7	18.4	0.0	3.0	0.0	83.2	4.3	-1.4	0.0	0.0	4.8	0.0	0.0	-7.8
454	426648.83	5410965.00	374.50	0	DEN	500	62.6	18.4	0.0	3.0	0.0	83.2	7.9	-2.8	0.0	0.0	4.8	0.0	0.0	-9.1
454	426648.83	5410965.00	374.50	0	DEN	1000	63.5	18.4	0.0	3.0	0.0	83.2	15.0	-2.8	0.0	0.0	4.8	0.0	0.0	-15.3
454	426648.83	5410965.00	374.50	0	DEN	2000	62.4	18.4	0.0	3.0	0.0	83.2	39.5	-2.8	0.0	0.0	4.8	0.0	0.0	-40.9
454	426648.83	5410965.00	374.50	0	DEN	4000	61.0	18.4	0.0	3.0	0.0	83.2	134.1	-2.8	0.0	0.0	4.8	0.0	0.0	-136.9
454	426648.83	5410965.00	374.50	0	DEN	8000	56.8	18.4	0.0	3.0	0.0	83.2	478.3	-2.8	0.0	0.0	4.8	0.0	0.0	-485.3
455	426648.83	5410965.00	372.50	0	DEN	63	47.0	18.4	0.0	3.0	0.0	83.2	0.5	-5.8	0.0	0.0	4.8	0.0	0.0	-14.3
455	426648.83	5410965.00	372.50	0	DEN	125	55.4	18.4	0.0	3.0	0.0	83.2	1.7	1.0	0.0	0.0	3.8	0.0	0.0	-12.9
455	426648.83	5410965.00	372.50	0	DEN	250	61.7	18.4	0.0	3.0	0.0	83.2	4.3	-1.5	0.0	0.0	4.8	0.0	0.0	-7.7

vert. Area Source, ISO 9613, Name: "MB_W-E", ID: ""																					
Nr.	X	Y	Z	Refl.	DEN	Freq.	Lw	l/a	Optime	K0	Dc	Adiv	Aatm	Agr	Afol	Ahous	Abar	Cmet	RL	Lr
	(m)	(m)	(m)			(Hz)	dB(A)	dB	dB	(dB)	(dB)	(dB)	(dB)	(dB)	(dB)	(dB)	(dB)	(dB)	(dB)	dB(A)
455	426648.83	5410965.00	372.50	0	DEN	500	62.6	18.4	0.0	3.0	0.0	83.2	7.9	-2.9	0.0	0.0	4.8	0.0	0.0	-9.0
455	426648.83	5410965.00	372.50	0	DEN	1000	63.5	18.4	0.0	3.0	0.0	83.2	15.0	-2.9	0.0	0.0	4.8	0.0	0.0	-15.2
455	426648.83	5410965.00	372.50	0	DEN	2000	62.4	18.4	0.0	3.0	0.0	83.2	39.5	-2.9	0.0	0.0	4.8	0.0	0.0	-40.9
455	426648.83	5410965.00	372.50	0	DEN	4000	61.0	18.4	0.0	3.0	0.0	83.2	134.1	-2.9	0.0	0.0	4.8	0.0	0.0	-136.9
455	426648.83	5410965.00	372.50	0	DEN	8000	56.8	18.4	0.0	3.0	0.0	83.2	478.3	-2.9	0.0	0.0	4.8	0.0	0.0	-485.3
456	426648.83	5410965.00	386.50	0	DEN	63	47.0	18.4	0.0	3.0	0.0	83.2	0.5	-5.5	0.0	0.0	4.8	0.0	0.0	-14.6
456	426648.83	5410965.00	386.50	0	DEN	125	55.4	18.4	0.0	3.0	0.0	83.2	1.7	1.3	0.0	0.0	3.5	0.0	0.0	-12.9
456	426648.83	5410965.00	386.50	0	DEN	250	61.7	18.4	0.0	3.0	0.0	83.2	4.3	-1.2	0.0	0.0	4.8	0.0	0.0	-8.0
456	426648.83	5410965.00	386.50	0	DEN	500	62.6	18.4	0.0	3.0	0.0	83.2	7.9	-2.6	0.0	0.0	4.8	0.0	0.0	-9.3
456	426648.83	5410965.00	386.50	0	DEN	1000	63.5	18.4	0.0	3.0	0.0	83.2	15.0	-2.6	0.0	0.0	4.8	0.0	0.0	-15.5
456	426648.83	5410965.00	386.50	0	DEN	2000	62.4	18.4	0.0	3.0	0.0	83.2	39.5	-2.6	0.0	0.0	4.8	0.0	0.0	-41.2
456	426648.83	5410965.00	386.50	0	DEN	4000	61.0	18.4	0.0	3.0	0.0	83.2	134.1	-2.6	0.0	0.0	4.8	0.0	0.0	-137.2
456	426648.83	5410965.00	386.50	0	DEN	8000	56.8	18.4	0.0	3.0	0.0	83.2	478.3	-2.6	0.0	0.0	4.8	0.0	0.0	-485.6
457	426648.83	5410965.00	373.50	0	DEN	63	47.0	18.4	0.0	3.0	0.0	83.2	0.5	-5.8	0.0	0.0	4.8	0.0	0.0	-14.3
457	426648.83	5410965.00	373.50	0	DEN	125	55.4	18.4	0.0	3.0	0.0	83.2	1.7	1.0	0.0	0.0	3.8	0.0	0.0	-12.9
457	426648.83	5410965.00	373.50	0	DEN	250	61.7	18.4	0.0	3.0	0.0	83.2	4.3	-1.5	0.0	0.0	4.8	0.0	0.0	-7.7
457	426648.83	5410965.00	373.50	0	DEN	500	62.6	18.4	0.0	3.0	0.0	83.2	7.9	-2.8	0.0	0.0	4.8	0.0	0.0	-9.1
457	426648.83	5410965.00	373.50	0	DEN	1000	63.5	18.4	0.0	3.0	0.0	83.2	15.0	-2.8	0.0	0.0	4.8	0.0	0.0	-15.2
457	426648.83	5410965.00	373.50	0	DEN	2000	62.4	18.4	0.0	3.0	0.0	83.2	39.5	-2.8	0.0	0.0	4.8	0.0	0.0	-40.9
457	426648.83	5410965.00	373.50	0	DEN	4000	61.0	18.4	0.0	3.0	0.0	83.2	134.1	-2.8	0.0	0.0	4.8	0.0	0.0	-136.9
457	426648.83	5410965.00	373.50	0	DEN	8000	56.8	18.4	0.0	3.0	0.0	83.2	478.3	-2.8	0.0	0.0	4.8	0.0	0.0	-485.3
458	426648.83	5410965.00	375.50	0	DEN	63	47.0	18.4	0.0	3.0	0.0	83.2	0.5	-5.8	0.0	0.0	4.8	0.0	0.0	-14.4
458	426648.83	5410965.00	375.50	0	DEN	125	55.4	18.4	0.0	3.0	0.0	83.2	1.7	1.0	0.0	0.0	3.7	0.0	0.0	-12.9
458	426648.83	5410965.00	375.50	0	DEN	250	61.7	18.4	0.0	3.0	0.0	83.2	4.3	-1.4	0.0	0.0	4.8	0.0	0.0	-7.8
458	426648.83	5410965.00	375.50	0	DEN	500	62.6	18.4	0.0	3.0	0.0	83.2	7.9	-2.8	0.0	0.0	4.8	0.0	0.0	-9.1
458	426648.83	5410965.00	375.50	0	DEN	1000	63.5	18.4	0.0	3.0	0.0	83.2	15.0	-2.8	0.0	0.0	4.8	0.0	0.0	-15.3
458	426648.83	5410965.00	375.50	0	DEN	2000	62.4	18.4	0.0	3.0	0.0	83.2	39.5	-2.8	0.0	0.0	4.8	0.0	0.0	-41.0
458	426648.83	5410965.00	375.50	0	DEN	4000	61.0	18.4	0.0	3.0	0.0	83.2	134.1	-2.8	0.0	0.0	4.8	0.0	0.0	-136.9
458	426648.83	5410965.00	375.50	0	DEN	8000	56.8	18.4	0.0	3.0	0.0	83.2	478.3	-2.8	0.0	0.0	4.8	0.0	0.0	-485.3

Line Source, ISO 9613, Name: "MGR_OPMill", ID: ""																					
Nr.	X	Y	Z	Refl.	DEN	Freq.	Lw	l/a	Optime	K0	Dc	Adiv	Aatm	Agr	Afol	Ahous	Abar	Cmet	RL	Lr
	(m)	(m)	(m)			(Hz)	dB(A)	dB	dB	(dB)	(dB)	(dB)	(dB)	(dB)	(dB)	(dB)	(dB)	(dB)	(dB)	dB(A)
211	425903.49	5409397.40	331.88	0	DEN	32	29.1	23.8	0.0	0.0	0.0	80.2	0.1	-5.7	0.0	0.0	4.8	0.0	0.0	-26.4
211	425903.49	5409397.40	331.88	0	DEN	63	46.6	23.8	0.0	0.0	0.0	80.2	0.4	-5.7	0.0	0.0	4.8	0.0	0.0	-9.2
211	425903.49	5409397.40	331.88	0	DEN	125	58.3	23.8	0.0	0.0	0.0	80.2	1.2	2.2	0.0	0.0	2.6	0.0	0.0	-4.1
211	425903.49	5409397.40	331.88	0	DEN	250	60.9	23.8	0.0	0.0	0.0	80.2	3.0	-0.2	0.0	0.0	4.8	0.0	0.0	-3.1
211	425903.49	5409397.40	331.88	0	DEN	500	65.1	23.8	0.0	0.0	0.0	80.2	5.6	-1.6	0.0	0.0	4.8	0.0	0.0	-0.1
211	425903.49	5409397.40	331.88	0	DEN	1000	65.6	23.8	0.0	0.0	0.0	80.2	10.6	-1.6	0.0	0.0	4.8	0.0	0.0	-4.6
211	425903.49	5409397.40	331.88	0	DEN	2000	64.3	23.8	0.0	0.0	0.0	80.2	28.0	-1.6	0.0	0.0	4.9	0.0	0.0	-23.3
211	425903.49	5409397.40	331.88	0	DEN	4000	60.4	23.8	0.0	0.0	0.0	80.2	94.8	-1.6	0.0	0.0	4.9	0.0	0.0	-94.2
211	425903.49	5409397.40	331.88	0	DEN	8000	55.1	23.8	0.0	0.0	0.0	80.2	338.2	-1.6	0.0	0.0	5.1	0.0	0.0	-343.0
233	426679.20	5410062.91	390.08	0	DEN	32	29.1	23.8	0.0	0.0	0.0	81.1	0.1	-5.8	0.0	0.0	4.8	0.0	0.0	-27.3
233	426679.20	5410062.91	390.08	0	DEN	63	46.6	23.8	0.0	0.0	0.0	81.1	0.4	-5.8	0.0	0.0	4.8	0.0	0.0	-10.1
233	426679.20	5410062.91	390.08	0	DEN	125	58.3	23.8	0.0	0.0	0.0	81.1	1.3	1.5	0.0	0.0	3.3	0.0	0.0	-5.1
233	426679.20	5410062.91	390.08	0	DEN	250	60.9	23.8	0.0	0.0	0.0	81.1	3.3	-1.0	0.0	0.0	4.8	0.0	0.0	-3.5
233	426679.20	5410062.91	390.08	0	DEN	500	65.1	23.8	0.0	0.0	0.0	81.1	6.2	-2.4	0.0	0.0	4.8	0.0	0.0	-0.7
233	426679.20	5410062.91	390.08	0	DEN	1000	65.6	23.8	0.0	0.0	0.0	81.1	11.7	-2.4	0.0	0.0	4.8	0.0	0.0	-5.8
233	426679.20	5410062.91	390.08	0	DEN	2000	64.3	23.8	0.0	0.0	0.0	81.1	31.0	-2.4	0.0	0.0	4.8	0.0	0.0	-26.3
233	426679.20	5410062.91	390.08	0	DEN	4000	60.4	23.8	0.0	0.0	0.0	81.1	105.0	-2.4	0.0	0.0	4.8	0.0	0.0	-104.3
233	426679.20	5410062.91	390.08	0	DEN	8000	55.1	23.8	0.0	0.0	0.0	81.1	374.6	-2.4	0.0	0.0	4.8	0.0	0.0	-379.2
236	426260.61	5409507.61	362.88	0	DEN	32	29.1	22.6	0.0	0.0	0.0	80.0	0.1	-5.7	0.0	0.0	4.8	0.0	0.0	-27.4
236	426260.61	5409507.61	362.88	0	DEN	63	46.6	22.6	0.0	0.0	0.0	80.0	0.3	-5.7	0.0	0.0	4.8	0.0	0.0	-10.2
236	426260.61	5409507.61	362.88	0	DEN	125	58.3	22.6	0.0	0.0	0.0	80.0	1.2	2.3	0.0	0.0	2.5	0.0	0.0	-5.0
236	426260.61	5409507.61	362.88	0	DEN	250	60.9	22.6	0.0	0.0	0.0	80.0	2.9	-0.1	0.0	0.0	4.8	0.0	0.0	-4.1
236	426260.61	5409507.61	362.88	0	DEN	500	65.1	22.6	0.0	0.0	0.0	80.0	5.4	-1.5	0.0	0.0	4.8	0.0	0.0	-1.0
236	426260.61	5409507.61	362.88	0	DEN	1000	65.6	22.6	0.0	0.0	0.0	80.0	10.3	-1.5	0.0	0.0	4.8	0.0	0.0	-5.3
236	426260.61	5409507.61	362.88	0	DEN	2000	64.3	22.6	0.0	0.0	0.0	80.0	27.2	-1.5	0.0	0.0	4.8	0.0	0.0	-23.6
236	426260.61	5409507.61	362.88	0	DEN	4000	60.4	22.6	0.0	0.0	0.0	80.0	92.4	-1.5	0.0	0.0	4.8	0.0	0.0	-92.6
236	426260.61	5409507.61	362.88	0	DEN	8000	55.1	22.6	0.0	0.0	0.0	80.0	329.5	-1.5	0.0	0.0	4.8	0.0	0.0	-335.0
261	425688.37	5409424.96	316.47	0	DEN	32	29.1	22.9	0.0	0.0	0.0	80.6	0.1	-5.7	0.0	0.0	4.8	0.0	0.0	-27.8
261	425688.37	5409424.96	316.47	0	DEN	63	46.6	22.9	0.0	0.0	0.0	80.6	0.4	-5.7	0.0	0.0	4.8	0.0	0.0	-10.6
261	425688.37	5409424.96	316.47	0	DEN	125	58.3	22.9	0.0	0.0	0.0	80.6	1.2	2.3	0.0	0.0	2.5	0.0	0.0	-5.5

Line Source, ISO 9613, Name: "MGR_OPMill", ID: ""																					
Nr.	X	Y	Z	Refl.	DEN	Freq.	Lw	l/a	Optime	K0	Dc	Adiv	Aatm	Agr	Afol	Ahous	Abar	Cmet	RL	Lr
	(m)	(m)	(m)			(Hz)	dB(A)	dB	dB	(dB)	(dB)	(dB)	(dB)	(dB)	(dB)	(dB)	(dB)	(dB)	(dB)	dB(A)
261	425688.37	5409424.96	316.47	0	DEN	250	60.9	22.9	0.0	0.0	0.0	80.6	3.2	-0.2	0.0	0.0	4.9	0.0	0.0	-4.7
261	425688.37	5409424.96	316.47	0	DEN	500	65.1	22.9	0.0	0.0	0.0	80.6	5.9	-1.6	0.0	0.0	5.0	0.0	0.0	-1.9
261	425688.37	5409424.96	316.47	0	DEN	1000	65.6	22.9	0.0	0.0	0.0	80.6	11.1	-1.6	0.0	0.0	5.1	0.0	0.0	-6.8
261	425688.37	5409424.96	316.47	0	DEN	2000	64.3	22.9	0.0	0.0	0.0	80.6	29.3	-1.6	0.0	0.0	5.5	0.0	0.0	-26.7
261	425688.37	5409424.96	316.47	0	DEN	4000	60.4	22.9	0.0	0.0	0.0	80.6	99.5	-1.6	0.0	0.0	6.1	0.0	0.0	-101.4
261	425688.37	5409424.96	316.47	0	DEN	8000	55.1	22.9	0.0	0.0	0.0	80.6	354.9	-1.6	0.0	0.0	7.1	0.0	0.0	-363.1
272	426364.46	5409644.32	369.88	0	DEN	32	29.1	22.3	0.0	0.0	0.0	80.3	0.1	-5.7	0.0	0.0	4.8	0.0	0.0	-28.0
272	426364.46	5409644.32	369.88	0	DEN	63	46.6	22.3	0.0	0.0	0.0	80.3	0.4	-5.7	0.0	0.0	4.8	0.0	0.0	-10.7
272	426364.46	5409644.32	369.88	0	DEN	125	58.3	22.3	0.0	0.0	0.0	80.3	1.2	2.0	0.0	0.0	2.8	0.0	0.0	-5.6
272	426364.46	5409644.32	369.88	0	DEN	250	60.9	22.3	0.0	0.0	0.0	80.3	3.0	-0.5	0.0	0.0	4.8	0.0	0.0	-4.3
272	426364.46	5409644.32	369.88	0	DEN	500	65.1	22.3	0.0	0.0	0.0	80.3	5.6	-1.9	0.0	0.0	4.8	0.0	0.0	-1.3
272	426364.46	5409644.32	369.88	0	DEN	1000	65.6	22.3	0.0	0.0	0.0	80.3	10.6	-1.9	0.0	0.0	4.8	0.0	0.0	-5.8
272	426364.46	5409644.32	369.88	0	DEN	2000	64.3	22.3	0.0	0.0	0.0	80.3	28.1	-1.9	0.0	0.0	4.8	0.0	0.0	-24.5
272	426364.46	5409644.32	369.88	0	DEN	4000	60.4	22.3	0.0	0.0	0.0	80.3	95.1	-1.9	0.0	0.0	4.8	0.0	0.0	-95.5
272	426364.46	5409644.32	369.88	0	DEN	8000	55.1	22.3	0.0	0.0	0.0	80.3	339.3	-1.9	0.0	0.0	4.8	0.0	0.0	-345.0
277	425499.74	5409457.81	299.87	0	DEN	32	29.1	22.8	0.0	0.0	0.0	81.0	0.1	-5.8	0.0	0.0	5.2	0.0	0.0	-28.6
277	425499.74	5409457.81	299.87	0	DEN	63	46.6	22.8	0.0	0.0	0.0	81.0	0.4	-5.8	0.0	0.0	5.5	0.0	0.0	-11.8
277	425499.74	5409457.81	299.87	0	DEN	125	58.3	22.8	0.0	0.0	0.0	81.0	1.3	2.2	0.0	0.0	4.0	0.0	0.0	-7.4
277	425499.74	5409457.81	299.87	0	DEN	250	60.9	22.8	0.0	0.0	0.0	81.0	3.3	-0.3	0.0	0.0	7.2	0.0	0.0	-7.6
277	425499.74	5409457.81	299.87	0	DEN	500	65.1	22.8	0.0	0.0	0.0	81.0	6.1	-1.7	0.0	0.0	8.8	0.0	0.0	-6.3
277	425499.74	5409457.81	299.87	0	DEN	1000	65.6	22.8	0.0	0.0	0.0	81.0	11.6	-1.7	0.0	0.0	10.8	0.0	0.0	-13.4
277	425499.74	5409457.81	299.87	0	DEN	2000	64.3	22.8	0.0	0.0	0.0	81.0	30.7	-1.7	0.0	0.0	13.3	0.0	0.0	-36.2
277	425499.74	5409457.81	299.87	0	DEN	4000	60.4	22.8	0.0	0.0	0.0	81.0	104.1	-1.7	0.0	0.0	16.0	0.0	0.0	-116.2
277	425499.74	5409457.81	299.87	0	DEN	8000	55.1	22.8	0.0	0.0	0.0	81.0	371.2	-1.7	0.0	0.0	18.8	0.0	0.0	-391.4
302	426489.51	5409758.77	376.62	0	DEN	32	29.1	22.3	0.0	0.0	0.0	80.4	0.1	-5.7	0.0	0.0	4.8	0.0	0.0	-28.2
302	426489.51	5409758.77	376.62	0	DEN	63	46.6	22.3	0.0	0.0	0.0	80.4	0.4	-5.7	0.0	0.0	4.8	0.0	0.0	-10.9
302	426489.51	5409758.77	376.62	0	DEN	125	58.3	22.3	0.0	0.0	0.0	80.4	1.2	2.0	0.0	0.0	2.7	0.0	0.0	-5.8
302	426489.51	5409758.77	376.62	0	DEN	250	60.9	22.3	0.0	0.0	0.0	80.4	3.1	-0.4	0.0	0.0	4.8	0.0	0.0	-4.7
302	426489.51	5409758.77	376.62	0	DEN	500	65.1	22.3	0.0	0.0	0.0	80.4	5.7	-1.9	0.0	0.0	4.8	0.0	0.0	-1.7
302	426489.51	5409758.77	376.62	0	DEN	1000	65.6	22.3	0.0	0.0	0.0	80.4	10.9	-1.9	0.0	0.0	4.8	0.0	0.0	-6.3
302	426489.51	5409758.77	376.62	0	DEN	2000	64.3	22.3	0.0	0.0	0.0	80.4	28.7	-1.9	0.0	0.0	4.8	0.0	0.0	-25.4
302	426489.51	5409758.77	376.62	0	DEN	4000	60.4	22.3	0.0	0.0	0.0	80.4	97.2	-1.9	0.0	0.0	4.8	0.0	0.0	-97.9
302	426489.51	5409758.77	376.62	0	DEN	8000	55.1	22.3	0.0	0.0	0.0	80.4	346.7	-1.9	0.0	0.0	4.8	0.0	0.0	-352.7
309	425549.54	5409548.94	266.36	0	DEN	32	29.1	22.6	0.0	0.0	0.0	81.2	0.1	-5.8	0.0	0.0	17.8	0.0	0.0	-41.6
309	425549.54	5409548.94	266.36	0	DEN	63	46.6	22.6	0.0	0.0	0.0	81.2	0.4	-5.8	0.0	0.0	20.0	0.0	0.0	-26.6
309	425549.54	5409548.94	266.36	0	DEN	125	58.3	22.6	0.0	0.0	0.0	81.2	1.3	2.1	0.0	0.0	17.9	0.0	0.0	-21.6
309	425549.54	5409548.94	266.36	0	DEN	250	60.9	22.6	0.0	0.0	0.0	81.2	3.4	-0.4	0.0	0.0	20.0	0.0	0.0	-20.6
309	425549.54	5409548.94	266.36	0	DEN	500	65.1	22.6	0.0	0.0	0.0	81.2	6.2	-1.8	0.0	0.0	20.0	0.0	0.0	-17.9
309	425549.54	5409548.94	266.36	0	DEN	1000	65.6	22.6	0.0	0.0	0.0	81.2	11.8	-1.8	0.0	0.0	20.0	0.0	0.0	-22.9
309	425549.54	5409548.94	266.36	0	DEN	2000	64.3	22.6	0.0	0.0	0.0	81.2	31.1	-1.8	0.0	0.0	20.0	0.0	0.0	-43.6
309	425549.54	5409548.94	266.36	0	DEN	4000	60.4	22.6	0.0	0.0	0.0	81.2	105.5	-1.8	0.0	0.0	20.0	0.0	0.0	-121.9
309	425549.54	5409548.94	266.36	0	DEN	8000	55.1	22.6	0.0	0.0	0.0	81.2	376.3	-1.8	0.0	0.0	20.0	0.0	0.0	-398.0
317	425716.98	5409561.66	261.97	0	DEN	32	29.1	22.3	0.0	0.0	0.0	80.9	0.1	-5.8	0.0	0.0	18.4	0.0	0.0	-42.2
317	425716.98	5409561.66	261.97	0	DEN	63	46.6	22.3	0.0	0.0	0.0	80.9	0.4	-5.8	0.0	0.0	20.0	0.0	0.0	-26.6
317	425716.98	5409561.66	261.97	0	DEN	125	58.3	22.3	0.0	0.0	0.0	80.9	1.3	2.0	0.0	0.0	18.0	0.0	0.0	-21.6
317	425716.98	5409561.66	261.97	0	DEN	250	60.9	22.3	0.0	0.0	0.0	80.9	3.3	-0.4	0.0	0.0	20.0	0.0	0.0	-20.6
317	425716.98	5409561.66	261.97	0	DEN	500	65.1	22.3	0.0	0.0	0.0	80.9	6.0	-1.8	0.0	0.0	20.0	0.0	0.0	-17.7
317	425716.98	5409561.66	261.97	0	DEN	1000	65.6	22.3	0.0	0.0	0.0	80.9	11.5	-1.8	0.0	0.0	20.0	0.0	0.0	-22.7
317	425716.98	5409561.66	261.97	0	DEN	2000	64.3	22.3	0.0	0.0	0.0	80.9	30.3	-1.8	0.0	0.0	20.0	0.0	0.0	-42.8
317	425716.98	5409561.66	261.97	0	DEN	4000	60.4	22.3	0.0	0.0	0.0	80.9	102.7	-1.8	0.0	0.0	20.0	0.0	0.0	-119.1
317	425716.98	5409561.66	261.97	0	DEN	8000	55.1	22.3	0.0	0.0	0.0	80.9	366.4	-1.8	0.0	0.0	20.0	0.0	0.0	-388.0
319	426087.88	5409382.57	342.63	0	DEN	32	29.1	21.2	0.0	0.0	0.0	79.9	0.1	-5.7	0.0	0.0	4.8	0.0	0.0	-28.7
319	426087.88	5409382.57	342.63	0	DEN	63	46.6	21.2	0.0	0.0	0.0	79.9	0.3	-5.7	0.0	0.0	4.8	0.0	0.0	-11.5
319	426087.88	5409382.57	342.63	0	DEN	125	58.3	21.2	0.0	0.0	0.0	79.9	1.1	2.1	0.0	0.0	2.6	0.0	0.0	-6.3
319	426087.88	5409382.57	342.63	0	DEN	250	60.9	21.2	0.0	0.0	0.0	79.9	2.9	-0.3	0.0	0.0	4.8	0.0	0.0	-5.2
319	426087.88	5409382.57	342.63	0	DEN	500	65.1	21.2	0.0	0.0	0.0	79.9	5.4	-1.7	0.0	0.0	4.8	0.0	0.0	-2.0
319	426087.88	5409382.57	342.63	0	DEN	1000	65.6	21.2	0.0	0.0	0.0	79.9	10.2	-1.7	0.0	0.0	4.8	0.0	0.0	-6.4
319	426087.88	5409382.57	342.63	0	DEN	2000	64.3	21.2	0.0	0.0	0.0	79.9	26.9	-1.7	0.0	0.0	4.8	0.0	0.0	-24.4
319	426087.88	5409382.57	342.63	0	DEN	4000	60.4	21.2	0.0	0.0	0.0	79.9	91.3	-1.7	0.0	0.0	4.9	0.0	0.0	-92.8
319	426087.88	5409382.57	342.63	0	DEN	8000	55.1	21.2	0.0	0.0	0.0	79.9	325.7	-1.7	0.0	0.0	5.1	0.0	0.0	-332.6
320	425455.23	5409792.68	252.00	0	DEN	32	29.1	23.0	0.0	0.0	0.0	81.8	0.1	-5.8	0.0	0.0	17.5	0.0	0.0	-41.5
320	425455.23	5409792.68	252.00	0	DEN	63	46.6	23.0	0.0	0.0	0.0	81.8	0.4	-5.8	0.0	0.0	20.7	0.0	0.0	-27.5
320	425455.23	5409792.68	252.00	0	DEN	125	58.3	23.0	0.0	0.0	0.0	81.8	1.4	1.8	0.0	0.0	21.8	0.0	0.0	-25.6

Line Source, ISO 9613, Name: "MGR_OPMill", ID: ""																					
Nr.	X	Y	Z	Refl.	DEN	Freq.	Lw	l/a	Optime	K0	Dc	Adiv	Aatm	Agr	Afol	Ahous	Abar	Cmet	RL	Lr
	(m)	(m)	(m)			(Hz)	dB(A)	dB	dB	(dB)	(dB)	(dB)	(dB)	(dB)	(dB)	(dB)	(dB)	(dB)	(dB)	dB(A)
320	425455.23	5409792.68	252.00	0	DEN	250	60.9	23.0	0.0	0.0	0.0	81.8	3.6	-0.6	0.0	0.0	25.0	0.0	0.0	-25.9
320	425455.23	5409792.68	252.00	0	DEN	500	65.1	23.0	0.0	0.0	0.0	81.8	6.7	-2.0	0.0	0.0	25.0	0.0	0.0	-23.4
320	425455.23	5409792.68	252.00	0	DEN	1000	65.6	23.0	0.0	0.0	0.0	81.8	12.7	-2.0	0.0	0.0	25.0	0.0	0.0	-28.9
320	425455.23	5409792.68	252.00	0	DEN	2000	64.3	23.0	0.0	0.0	0.0	81.8	33.6	-2.0	0.0	0.0	25.0	0.0	0.0	-51.0
320	425455.23	5409792.68	252.00	0	DEN	4000	60.4	23.0	0.0	0.0	0.0	81.8	113.8	-2.0	0.0	0.0	25.0	0.0	0.0	-135.2
320	425455.23	5409792.68	252.00	0	DEN	8000	55.1	23.0	0.0	0.0	0.0	81.8	405.9	-2.0	0.0	0.0	25.0	0.0	0.0	-432.6
321	426583.83	5409889.11	381.50	0	DEN	32	29.1	21.9	0.0	0.0	0.0	80.7	0.1	-5.8	0.0	0.0	4.8	0.0	0.0	-28.8
321	426583.83	5409889.11	381.50	0	DEN	63	46.6	21.9	0.0	0.0	0.0	80.7	0.4	-5.8	0.0	0.0	4.8	0.0	0.0	-11.6
321	426583.83	5409889.11	381.50	0	DEN	125	58.3	21.9	0.0	0.0	0.0	80.7	1.3	1.6	0.0	0.0	3.2	0.0	0.0	-6.5
321	426583.83	5409889.11	381.50	0	DEN	250	60.9	21.9	0.0	0.0	0.0	80.7	3.2	-0.9	0.0	0.0	4.8	0.0	0.0	-5.0
321	426583.83	5409889.11	381.50	0	DEN	500	65.1	21.9	0.0	0.0	0.0	80.7	5.9	-2.3	0.0	0.0	4.8	0.0	0.0	-2.1
321	426583.83	5409889.11	381.50	0	DEN	1000	65.6	21.9	0.0	0.0	0.0	80.7	11.2	-2.3	0.0	0.0	4.8	0.0	0.0	-6.9
321	426583.83	5409889.11	381.50	0	DEN	2000	64.3	21.9	0.0	0.0	0.0	80.7	29.6	-2.3	0.0	0.0	4.8	0.0	0.0	-26.6
321	426583.83	5409889.11	381.50	0	DEN	4000	60.4	21.9	0.0	0.0	0.0	80.7	100.3	-2.3	0.0	0.0	4.8	0.0	0.0	-101.2
321	426583.83	5409889.11	381.50	0	DEN	8000	55.1	21.9	0.0	0.0	0.0	80.7	357.9	-2.3	0.0	0.0	4.8	0.0	0.0	-364.1
326	425632.20	5409752.41	250.04	0	DEN	32	29.1	22.5	0.0	0.0	0.0	81.5	0.1	-5.8	0.0	0.0	9.1	0.0	0.0	-33.4
326	425632.20	5409752.41	250.04	0	DEN	63	46.6	22.5	0.0	0.0	0.0	81.5	0.4	-5.8	0.0	0.0	12.4	0.0	0.0	-19.4
326	425632.20	5409752.41	250.04	0	DEN	125	58.3	22.5	0.0	0.0	0.0	81.5	1.4	1.9	0.0	0.0	14.4	0.0	0.0	-18.3
326	425632.20	5409752.41	250.04	0	DEN	250	60.9	22.5	0.0	0.0	0.0	81.5	3.5	-0.6	0.0	0.0	19.8	0.0	0.0	-20.8
326	425632.20	5409752.41	250.04	0	DEN	500	65.1	22.5	0.0	0.0	0.0	81.5	6.4	-2.0	0.0	0.0	23.0	0.0	0.0	-21.3
326	425632.20	5409752.41	250.04	0	DEN	1000	65.6	22.5	0.0	0.0	0.0	81.5	12.2	-2.0	0.0	0.0	25.0	0.0	0.0	-28.7
326	425632.20	5409752.41	250.04	0	DEN	2000	64.3	22.5	0.0	0.0	0.0	81.5	32.3	-2.0	0.0	0.0	25.0	0.0	0.0	-50.0
326	425632.20	5409752.41	250.04	0	DEN	4000	60.4	22.5	0.0	0.0	0.0	81.5	109.5	-2.0	0.0	0.0	25.0	0.0	0.0	-131.1
326	425632.20	5409752.41	250.04	0	DEN	8000	55.1	22.5	0.0	0.0	0.0	81.5	390.5	-2.0	0.0	0.0	25.0	0.0	0.0	-417.4
340	425751.95	5409649.62	247.87	0	DEN	32	29.1	21.6	0.0	0.0	0.0	81.1	0.1	-5.8	0.0	0.0	7.0	0.0	0.0	-31.7
340	425751.95	5409649.62	247.87	0	DEN	63	46.6	21.6	0.0	0.0	0.0	81.1	0.4	-5.8	0.0	0.0	8.5	0.0	0.0	-15.9
340	425751.95	5409649.62	247.87	0	DEN	125	58.3	21.6	0.0	0.0	0.0	81.1	1.3	2.0	0.0	0.0	8.5	0.0	0.0	-12.9
340	425751.95	5409649.62	247.87	0	DEN	250	60.9	21.6	0.0	0.0	0.0	81.1	3.3	-0.5	0.0	0.0	12.8	0.0	0.0	-14.2
340	425751.95	5409649.62	247.87	0	DEN	500	65.1	21.6	0.0	0.0	0.0	81.1	6.1	-1.9	0.0	0.0	15.4	0.0	0.0	-14.1
340	425751.95	5409649.62	247.87	0	DEN	1000	65.6	21.6	0.0	0.0	0.0	81.1	11.7	-1.9	0.0	0.0	18.3	0.0	0.0	-21.9
340	425751.95	5409649.62	247.87	0	DEN	2000	64.3	21.6	0.0	0.0	0.0	81.1	30.8	-1.9	0.0	0.0	21.2	0.0	0.0	-45.3
340	425751.95	5409649.62	247.87	0	DEN	4000	60.4	21.6	0.0	0.0	0.0	81.1	104.5	-1.9	0.0	0.0	24.1	0.0	0.0	-125.8
340	425751.95	5409649.62	247.87	0	DEN	8000	55.1	21.6	0.0	0.0	0.0	81.1	372.8	-1.9	0.0	0.0	25.0	0.0	0.0	-400.3
345	425358.79	5409535.17	277.40	0	DEN	32	29.1	21.7	0.0	0.0	0.0	81.4	0.1	-5.8	0.0	0.0	5.1	0.0	0.0	-30.1
345	425358.79	5409535.17	277.40	0	DEN	63	46.6	21.7	0.0	0.0	0.0	81.4	0.4	-5.8	0.0	0.0	5.4	0.0	0.0	-13.2
345	425358.79	5409535.17	277.40	0	DEN	125	58.3	21.7	0.0	0.0	0.0	81.4	1.4	2.1	0.0	0.0	3.9	0.0	0.0	-8.8
345	425358.79	5409535.17	277.40	0	DEN	250	60.9	21.7	0.0	0.0	0.0	81.4	3.5	-0.4	0.0	0.0	6.9	0.0	0.0	-8.8
345	425358.79	5409535.17	277.40	0	DEN	500	65.1	21.7	0.0	0.0	0.0	81.4	6.4	-1.8	0.0	0.0	8.4	0.0	0.0	-7.6
345	425358.79	5409535.17	277.40	0	DEN	1000	65.6	21.7	0.0	0.0	0.0	81.4	12.2	-1.8	0.0	0.0	10.3	0.0	0.0	-14.8
345	425358.79	5409535.17	277.40	0	DEN	2000	64.3	21.7	0.0	0.0	0.0	81.4	32.1	-1.8	0.0	0.0	12.6	0.0	0.0	-38.4
345	425358.79	5409535.17	277.40	0	DEN	4000	60.4	21.7	0.0	0.0	0.0	81.4	109.0	-1.8	0.0	0.0	15.3	0.0	0.0	-121.8
345	425358.79	5409535.17	277.40	0	DEN	8000	55.1	21.7	0.0	0.0	0.0	81.4	388.6	-1.8	0.0	0.0	18.1	0.0	0.0	-409.6
347	425307.93	5409669.75	264.69	0	DEN	32	29.1	22.1	0.0	0.0	0.0	81.8	0.1	-5.8	0.0	0.0	4.8	0.0	0.0	-29.7
347	425307.93	5409669.75	264.69	0	DEN	63	46.6	22.1	0.0	0.0	0.0	81.8	0.4	-5.8	0.0	0.0	4.8	0.0	0.0	-12.5
347	425307.93	5409669.75	264.69	0	DEN	125	58.3	22.1	0.0	0.0	0.0	81.8	1.4	1.9	0.0	0.0	2.9	0.0	0.0	-7.7
347	425307.93	5409669.75	264.69	0	DEN	250	60.9	22.1	0.0	0.0	0.0	81.8	3.6	-0.5	0.0	0.0	4.9	0.0	0.0	-6.8
347	425307.93	5409669.75	264.69	0	DEN	500	65.1	22.1	0.0	0.0	0.0	81.8	6.7	-1.9	0.0	0.0	4.9	0.0	0.0	-4.3
347	425307.93	5409669.75	264.69	0	DEN	1000	65.6	22.1	0.0	0.0	0.0	81.8	12.7	-1.9	0.0	0.0	5.1	0.0	0.0	-9.9
347	425307.93	5409669.75	264.69	0	DEN	2000	64.3	22.1	0.0	0.0	0.0	81.8	33.5	-1.9	0.0	0.0	5.4	0.0	0.0	-32.3
347	425307.93	5409669.75	264.69	0	DEN	4000	60.4	22.1	0.0	0.0	0.0	81.8	113.4	-1.9	0.0	0.0	6.0	0.0	0.0	-116.8
347	425307.93	5409669.75	264.69	0	DEN	8000	55.1	22.1	0.0	0.0	0.0	81.8	404.6	-1.9	0.0	0.0	6.9	0.0	0.0	-414.2
355	425373.63	5409676.11	281.78	0	DEN	32	29.1	21.8	0.0	0.0	0.0	81.7	0.1	-5.8	0.0	0.0	19.8	0.0	0.0	-44.9
355	425373.63	5409676.11	281.78	0	DEN	63	46.6	21.8	0.0	0.0	0.0	81.7	0.4	-5.8	0.0	0.0	23.6	0.0	0.0	-31.5
355	425373.63	5409676.11	281.78	0	DEN	125	58.3	21.8	0.0	0.0	0.0	81.7	1.4	1.9	0.0	0.0	23.1	0.0	0.0	-28.0
355	425373.63	5409676.11	281.78	0	DEN	250	60.9	21.8	0.0	0.0	0.0	81.7	3.6	-0.5	0.0	0.0	25.0	0.0	0.0	-27.0
355	425373.63	5409676.11	281.78	0	DEN	500	65.1	21.8	0.0	0.0	0.0	81.7	6.6	-1.9	0.0	0.0	25.0	0.0	0.0	-24.4
355	425373.63	5409676.11	281.78	0	DEN	1000	65.6	21.8	0.0	0.0	0.0	81.7	12.5	-1.9	0.0	0.0	25.0	0.0	0.0	-29.9
355	425373.63	5409676.11	281.78	0	DEN	2000	64.3	21.8	0.0	0.0	0.0	81.7	33.1	-1.9	0.0	0.0	25.0	0.0	0.0	-51.7
355	425373.63	5409676.11	281.78	0	DEN	4000	60.4	21.8	0.0	0.0	0.0	81.7	112.3	-1.9	0.0	0.0	25.0	0.0	0.0	-134.8
355	425373.63	5409676.11	281.78	0	DEN	8000	55.1	21.8	0.0	0.0	0.0	81.7	400.5	-1.9	0.0	0.0	25.0	0.0	0.0	-428.3
389	425413.90	5409600.87	235.41	0	DEN	32	29.1	20.9	0.0	0.0	0.0	81.5	0.1	-5.8	0.0	0.0	23.3	0.0	0.0	-49.1
389	425413.90	5409600.87	235.41	0	DEN	63	46.6	20.9	0.0	0.0	0.0	81.5	0.4	-5.8	0.0	0.0	25.0	0.0	0.0	-33.7
389	425413.90	5409600.87	235.41	0	DEN	125	58.3	20.9	0.0	0.0	0.0	81.5	1.4	2.0	0.0	0.0	23.0	0.0	0.0	-28.7

Line Source, ISO 9613, Name: "MGR_OPMill", ID: ""																					
Nr.	X	Y	Z	Refl.	DEN	Freq.	Lw	l/a	Optime	K0	Dc	Adiv	Aatm	Agr	Afol	Ahous	Abar	Cmet	RL	Lr
	(m)	(m)	(m)			(Hz)	dB(A)	dB	dB	(dB)	(dB)	(dB)	(dB)	(dB)	(dB)	(dB)	(dB)	(dB)	(dB)	dB(A)
389	425413.90	5409600.87	235.41	0	DEN	250	60.9	20.9	0.0	0.0	0.0	81.5	3.5	-0.4	0.0	0.0	25.0	0.0	0.0	-27.8
389	425413.90	5409600.87	235.41	0	DEN	500	65.1	20.9	0.0	0.0	0.0	81.5	6.4	-1.8	0.0	0.0	25.0	0.0	0.0	-25.1
389	425413.90	5409600.87	235.41	0	DEN	1000	65.6	20.9	0.0	0.0	0.0	81.5	12.2	-1.8	0.0	0.0	25.0	0.0	0.0	-30.4
389	425413.90	5409600.87	235.41	0	DEN	2000	64.3	20.9	0.0	0.0	0.0	81.5	32.3	-1.8	0.0	0.0	25.0	0.0	0.0	-51.8
389	425413.90	5409600.87	235.41	0	DEN	4000	60.4	20.9	0.0	0.0	0.0	81.5	109.6	-1.8	0.0	0.0	25.0	0.0	0.0	-132.9
389	425413.90	5409600.87	235.41	0	DEN	8000	55.1	20.9	0.0	0.0	0.0	81.5	390.8	-1.8	0.0	0.0	25.0	0.0	0.0	-419.5
395	426188.55	5409404.82	352.74	0	DEN	32	29.1	19.1	0.0	0.0	0.0	79.8	0.1	-5.7	0.0	0.0	4.8	0.0	0.0	-30.8
395	426188.55	5409404.82	352.74	0	DEN	63	46.6	19.1	0.0	0.0	0.0	79.8	0.3	-5.7	0.0	0.0	4.8	0.0	0.0	-13.5
395	426188.55	5409404.82	352.74	0	DEN	125	58.3	19.1	0.0	0.0	0.0	79.8	1.1	2.2	0.0	0.0	2.6	0.0	0.0	-8.4
395	426188.55	5409404.82	352.74	0	DEN	250	60.9	19.1	0.0	0.0	0.0	79.8	2.9	-0.3	0.0	0.0	4.8	0.0	0.0	-7.2
395	426188.55	5409404.82	352.74	0	DEN	500	65.1	19.1	0.0	0.0	0.0	79.8	5.3	-1.7	0.0	0.0	4.9	0.0	0.0	-4.1
395	426188.55	5409404.82	352.74	0	DEN	1000	65.6	19.1	0.0	0.0	0.0	79.8	10.1	-1.7	0.0	0.0	5.0	0.0	0.0	-8.5
395	426188.55	5409404.82	352.74	0	DEN	2000	64.3	19.1	0.0	0.0	0.0	79.8	26.7	-1.7	0.0	0.0	5.2	0.0	0.0	-26.5
395	426188.55	5409404.82	352.74	0	DEN	4000	60.4	19.1	0.0	0.0	0.0	79.8	90.4	-1.7	0.0	0.0	5.5	0.0	0.0	-94.5
395	426188.55	5409404.82	352.74	0	DEN	8000	55.1	19.1	0.0	0.0	0.0	79.8	322.4	-1.7	0.0	0.0	6.1	0.0	0.0	-332.4
414	425425.56	5409721.68	359.01	0	DEN	32	29.1	19.8	0.0	0.0	0.0	81.7	0.1	-5.8	0.0	0.0	4.8	0.0	0.0	-31.9
414	425425.56	5409721.68	359.01	0	DEN	63	46.6	19.8	0.0	0.0	0.0	81.7	0.4	-5.8	0.0	0.0	4.8	0.0	0.0	-14.7
414	425425.56	5409721.68	359.01	0	DEN	125	58.3	19.8	0.0	0.0	0.0	81.7	1.4	1.9	0.0	0.0	2.9	0.0	0.0	-9.8
414	425425.56	5409721.68	359.01	0	DEN	250	60.9	19.8	0.0	0.0	0.0	81.7	3.6	-0.6	0.0	0.0	4.8	0.0	0.0	-8.8
414	425425.56	5409721.68	359.01	0	DEN	500	65.1	19.8	0.0	0.0	0.0	81.7	6.6	-2.0	0.0	0.0	4.8	0.0	0.0	-6.2
414	425425.56	5409721.68	359.01	0	DEN	1000	65.6	19.8	0.0	0.0	0.0	81.7	12.5	-2.0	0.0	0.0	4.8	0.0	0.0	-11.7
414	425425.56	5409721.68	359.01	0	DEN	2000	64.3	19.8	0.0	0.0	0.0	81.7	33.2	-2.0	0.0	0.0	4.8	0.0	0.0	-33.6
414	425425.56	5409721.68	359.01	0	DEN	4000	60.4	19.8	0.0	0.0	0.0	81.7	112.4	-2.0	0.0	0.0	4.8	0.0	0.0	-116.8
414	425425.56	5409721.68	359.01	0	DEN	8000	55.1	19.8	0.0	0.0	0.0	81.7	401.0	-2.0	0.0	0.0	4.8	0.0	0.0	-410.6
472	425330.18	5409769.36	259.98	0	DEN	32	29.1	18.0	0.0	0.0	0.0	81.9	0.1	-5.8	0.0	0.0	16.6	0.0	0.0	-45.8
472	425330.18	5409769.36	259.98	0	DEN	63	46.6	18.0	0.0	0.0	0.0	81.9	0.4	-5.8	0.0	0.0	20.0	0.0	0.0	-32.0
472	425330.18	5409769.36	259.98	0	DEN	125	58.3	18.0	0.0	0.0	0.0	81.9	1.4	1.8	0.0	0.0	21.2	0.0	0.0	-30.2
472	425330.18	5409769.36	259.98	0	DEN	250	60.9	18.0	0.0	0.0	0.0	81.9	3.7	-0.6	0.0	0.0	25.0	0.0	0.0	-31.1
472	425330.18	5409769.36	259.98	0	DEN	500	65.1	18.0	0.0	0.0	0.0	81.9	6.8	-2.0	0.0	0.0	25.0	0.0	0.0	-28.7
472	425330.18	5409769.36	259.98	0	DEN	1000	65.6	18.0	0.0	0.0	0.0	81.9	12.9	-2.0	0.0	0.0	25.0	0.0	0.0	-34.3
472	425330.18	5409769.36	259.98	0	DEN	2000	64.3	18.0	0.0	0.0	0.0	81.9	34.1	-2.0	0.0	0.0	25.0	0.0	0.0	-56.7
472	425330.18	5409769.36	259.98	0	DEN	4000	60.4	18.0	0.0	0.0	0.0	81.9	115.6	-2.0	0.0	0.0	25.0	0.0	0.0	-142.1
472	425330.18	5409769.36	259.98	0	DEN	8000	55.1	18.0	0.0	0.0	0.0	81.9	412.3	-2.0	0.0	0.0	25.0	0.0	0.0	-444.1

Line Source, ISO 9613, Name: "TRE_OP-PAG", ID: ""																					
Nr.	X	Y	Z	Refl.	DEN	Freq.	Lw	l/a	Optime	K0	Dc	Adiv	Aatm	Agr	Afol	Ahous	Abar	Cmet	RL	Lr
	(m)	(m)	(m)			(Hz)	dB(A)	dB	dB	(dB)	(dB)	(dB)	(dB)	(dB)	(dB)	(dB)	(dB)	(dB)	(dB)	dB(A)
157	425801.66	5409408.25	323.64	0	DEN	32	37.5	26.3	0.0	0.0	0.0	80.4	0.1	-5.7	0.0	0.0	4.8	0.0	0.0	-15.8
157	425801.66	5409408.25	323.64	0	DEN	63	55.4	26.3	0.0	0.0	0.0	80.4	0.4	-5.7	0.0	0.0	4.8	0.0	0.0	1.8
157	425801.66	5409408.25	323.64	0	DEN	125	62.3	26.3	0.0	0.0	0.0	80.4	1.2	2.2	0.0	0.0	2.6	0.0	0.0	2.1
157	425801.66	5409408.25	323.64	0	DEN	250	63.1	26.3	0.0	0.0	0.0	80.4	3.1	-0.2	0.0	0.0	4.8	0.0	0.0	1.3
157	425801.66	5409408.25	323.64	0	DEN	500	66.5	26.3	0.0	0.0	0.0	80.4	5.7	-1.6	0.0	0.0	4.8	0.0	0.0	3.4
157	425801.66	5409408.25	323.64	0	DEN	1000	65.9	26.3	0.0	0.0	0.0	80.4	10.8	-1.6	0.0	0.0	4.9	0.0	0.0	-2.3
157	425801.66	5409408.25	323.64	0	DEN	2000	63.7	26.3	0.0	0.0	0.0	80.4	28.6	-1.6	0.0	0.0	4.9	0.0	0.0	-22.4
157	425801.66	5409408.25	323.64	0	DEN	4000	58.8	26.3	0.0	0.0	0.0	80.4	96.9	-1.6	0.0	0.0	5.1	0.0	0.0	-95.8
157	425801.66	5409408.25	323.64	0	DEN	8000	49.9	26.3	0.0	0.0	0.0	80.4	345.8	-1.6	0.0	0.0	5.4	0.0	0.0	-353.9
167	427770.13	5409934.85	378.49	0	DEN	32	37.5	26.0	0.0	0.0	0.0	80.5	0.1	-5.7	0.0	0.0	4.8	0.0	0.0	-16.2
167	427770.13	5409934.85	378.49	0	DEN	63	55.4	26.0	0.0	0.0	0.0	80.5	0.4	-5.7	0.0	0.0	4.8	0.0	0.0	1.4
167	427770.13	5409934.85	378.49	0	DEN	125	62.3	26.0	0.0	0.0	0.0	80.5	1.2	1.6	0.0	0.0	3.2	0.0	0.0	1.7
167	427770.13	5409934.85	378.49	0	DEN	250	63.1	26.0	0.0	0.0	0.0	80.5	3.1	-0.9	0.0	0.0	4.8	0.0	0.0	1.5
167	427770.13	5409934.85	378.49	0	DEN	500	66.5	26.0	0.0	0.0	0.0	80.5	5.8	-2.3	0.0	0.0	4.8	0.0	0.0	3.7
167	427770.13	5409934.85	378.49	0	DEN	1000	65.9	26.0	0.0	0.0	0.0	80.5	11.0	-2.3	0.0	0.0	4.8	0.0	0.0	-2.1
167	427770.13	5409934.85	378.49	0	DEN	2000	63.7	26.0	0.0	0.0	0.0	80.5	29.0	-2.3	0.0	0.0	4.8	0.0	0.0	-22.3
167	427770.13	5409934.85	378.49	0	DEN	4000	58.8	26.0	0.0	0.0	0.0	80.5	98.3	-2.3	0.0	0.0	4.8	0.0	0.0	-96.5
167	427770.13	5409934.85	378.49	0	DEN	8000	49.9	26.0	0.0	0.0	0.0	80.5	350.6	-2.3	0.0	0.0	4.8	0.0	0.0	-357.8
185	427130.64	5409764.07	392.31	0	DEN	32	37.5	24.3	0.0	0.0	0.0	80.0	0.1	-5.7	0.0	0.0	0.0	0.0	0.0	-12.6
185	427130.64	5409764.07	392.31	0	DEN	63	55.4	24.3	0.0	0.0	0.0	80.0	0.3	-5.7	0.0	0.0	0.0	0.0	0.0	5.1
185	427130.64	5409764.07	392.31	0	DEN	125	62.3	24.3	0.0	0.0	0.0	80.0	1.2	1.8	0.0	0.0	0.0	0.0	0.0	3.6
185	427130.64	5409764.07	392.31	0	DEN	250	63.1	24.3	0.0	0.0	0.0	80.0	3.0	-0.6	0.0	0.0	0.0	0.0	0.0	5.1
185	427130.64	5409764.07	392.31	0	DEN	500	66.5	24.3	0.0	0.0	0.0	80.0	5.5	-2.0	0.0	0.0	0.0	0.0	0.0	7.4
185	427130.64	5409764.07	392.31	0	DEN	1000	65.9	24.3	0.0	0.0	0.0	80.0	10.4	-2.0	0.0	0.0	0.0	0.0	0.0	1.9
185	427130.64	5409764.07	392.31	0	DEN	2000	63.7	24.3	0.0	0.0	0.0	80.0	27.4	-2.0	0.0	0.0	0.0	0.0	0.0	-17.3
185	427130.64	5409764.07	392.31	0	DEN	4000	58.8	24.3	0.0	0.0	0.0	80.0	92.7	-2.0	0.0	0.0	0.0	0.0	0.0	-87.6

Line Source, ISO 9613, Name: "TRE_OP-PAG", ID: ""																				
Nr.	X	Y	Z	Refl.	DEN	Freq.	Lw	l/a	Optime	K0	Dc	Adiv	Aatm	Agr	Afol	Ahous	Abar	Cmet	RL	Lr
	(m)	(m)	(m)			(Hz)	dB(A)	dB	dB	(dB)	(dB)	(dB)	(dB)	(dB)	(dB)	(dB)	(dB)	(dB)	(dB)	dB(A)
185	427130.64	5409764.07	392.31	0	DEN	8000	49.9	24.3	0.0	0.0	0.0	80.0	330.8	-2.0	0.0	0.0	0.0	0.0	0.0	-334.6
218	426731.13	5409642.73	379.00	0	DEN	32	37.5	22.6	0.0	0.0	0.0	79.9	0.1	-5.7	0.0	0.0	4.8	0.0	0.0	-19.0
218	426731.13	5409642.73	379.00	0	DEN	63	55.4	22.6	0.0	0.0	0.0	79.9	0.3	-5.7	0.0	0.0	4.8	0.0	0.0	-1.3
218	426731.13	5409642.73	379.00	0	DEN	125	62.3	22.6	0.0	0.0	0.0	79.9	1.1	1.8	0.0	0.0	3.0	0.0	0.0	-1.0
218	426731.13	5409642.73	379.00	0	DEN	250	63.1	22.6	0.0	0.0	0.0	79.9	2.9	-0.7	0.0	0.0	4.8	0.0	0.0	-1.3
218	426731.13	5409642.73	379.00	0	DEN	500	66.5	22.6	0.0	0.0	0.0	79.9	5.4	-2.1	0.0	0.0	4.8	0.0	0.0	1.1
218	426731.13	5409642.73	379.00	0	DEN	1000	65.9	22.6	0.0	0.0	0.0	79.9	10.2	-2.1	0.0	0.0	4.9	0.0	0.0	-4.4
218	426731.13	5409642.73	379.00	0	DEN	2000	63.7	22.6	0.0	0.0	0.0	79.9	26.9	-2.1	0.0	0.0	4.9	0.0	0.0	-23.4
218	426731.13	5409642.73	379.00	0	DEN	4000	58.8	22.6	0.0	0.0	0.0	79.9	91.3	-2.1	0.0	0.0	5.1	0.0	0.0	-92.8
218	426731.13	5409642.73	379.00	0	DEN	8000	49.9	22.6	0.0	0.0	0.0	79.9	325.5	-2.1	0.0	0.0	5.4	0.0	0.0	-336.3
221	426423.02	5409600.02	372.09	0	DEN	32	37.5	22.6	0.0	0.0	0.0	80.1	0.1	-5.7	0.0	0.0	4.8	0.0	0.0	-19.1
221	426423.02	5409600.02	372.09	0	DEN	63	55.4	22.6	0.0	0.0	0.0	80.1	0.3	-5.7	0.0	0.0	4.8	0.0	0.0	-1.5
221	426423.02	5409600.02	372.09	0	DEN	125	62.3	22.6	0.0	0.0	0.0	80.1	1.2	2.0	0.0	0.0	2.7	0.0	0.0	-1.1
221	426423.02	5409600.02	372.09	0	DEN	250	63.1	22.6	0.0	0.0	0.0	80.1	3.0	-0.4	0.0	0.0	4.8	0.0	0.0	-1.7
221	426423.02	5409600.02	372.09	0	DEN	500	66.5	22.6	0.0	0.0	0.0	80.1	5.5	-1.8	0.0	0.0	4.8	0.0	0.0	0.6
221	426423.02	5409600.02	372.09	0	DEN	1000	65.9	22.6	0.0	0.0	0.0	80.1	10.4	-1.8	0.0	0.0	4.8	0.0	0.0	-4.9
221	426423.02	5409600.02	372.09	0	DEN	2000	63.7	22.6	0.0	0.0	0.0	80.1	27.4	-1.8	0.0	0.0	4.8	0.0	0.0	-24.2
221	426423.02	5409600.02	372.09	0	DEN	4000	58.8	22.6	0.0	0.0	0.0	80.1	93.1	-1.8	0.0	0.0	4.8	0.0	0.0	-94.7
221	426423.02	5409600.02	372.09	0	DEN	8000	49.9	22.6	0.0	0.0	0.0	80.1	332.0	-1.8	0.0	0.0	4.8	0.0	0.0	-342.5
224	426257.88	5409501.70	362.21	0	DEN	32	37.5	22.5	0.0	0.0	0.0	80.0	0.1	-5.7	0.0	0.0	4.8	0.0	0.0	-19.2
224	426257.88	5409501.70	362.21	0	DEN	63	55.4	22.5	0.0	0.0	0.0	80.0	0.3	-5.7	0.0	0.0	4.8	0.0	0.0	-1.5
224	426257.88	5409501.70	362.21	0	DEN	125	62.3	22.5	0.0	0.0	0.0	80.0	1.2	2.3	0.0	0.0	2.5	0.0	0.0	-1.2
224	426257.88	5409501.70	362.21	0	DEN	250	63.1	22.5	0.0	0.0	0.0	80.0	2.9	-0.1	0.0	0.0	4.8	0.0	0.0	-2.0
224	426257.88	5409501.70	362.21	0	DEN	500	66.5	22.5	0.0	0.0	0.0	80.0	5.4	-1.5	0.0	0.0	4.8	0.0	0.0	0.3
224	426257.88	5409501.70	362.21	0	DEN	1000	65.9	22.5	0.0	0.0	0.0	80.0	10.3	-1.5	0.0	0.0	4.8	0.0	0.0	-5.2
224	426257.88	5409501.70	362.21	0	DEN	2000	63.7	22.5	0.0	0.0	0.0	80.0	27.2	-1.5	0.0	0.0	4.8	0.0	0.0	-24.3
224	426257.88	5409501.70	362.21	0	DEN	4000	58.8	22.5	0.0	0.0	0.0	80.0	92.2	-1.5	0.0	0.0	4.8	0.0	0.0	-94.2
224	426257.88	5409501.70	362.21	0	DEN	8000	49.9	22.5	0.0	0.0	0.0	80.0	329.0	-1.5	0.0	0.0	4.8	0.0	0.0	-339.9
240	425499.96	5409458.22	299.79	0	DEN	32	37.5	22.8	0.0	0.0	0.0	81.0	0.1	-5.8	0.0	0.0	5.2	0.0	0.0	-20.2
240	425499.96	5409458.22	299.79	0	DEN	63	55.4	22.8	0.0	0.0	0.0	81.0	0.4	-5.8	0.0	0.0	5.5	0.0	0.0	-3.0
240	425499.96	5409458.22	299.79	0	DEN	125	62.3	22.8	0.0	0.0	0.0	81.0	1.3	2.2	0.0	0.0	4.0	0.0	0.0	-3.4
240	425499.96	5409458.22	299.79	0	DEN	250	63.1	22.8	0.0	0.0	0.0	81.0	3.3	-0.3	0.0	0.0	7.2	0.0	0.0	-5.4
240	425499.96	5409458.22	299.79	0	DEN	500	66.5	22.8	0.0	0.0	0.0	81.0	6.1	-1.7	0.0	0.0	8.8	0.0	0.0	-4.9
240	425499.96	5409458.22	299.79	0	DEN	1000	65.9	22.8	0.0	0.0	0.0	81.0	11.6	-1.7	0.0	0.0	10.8	0.0	0.0	-13.1
240	425499.96	5409458.22	299.79	0	DEN	2000	63.7	22.8	0.0	0.0	0.0	81.0	30.7	-1.7	0.0	0.0	13.2	0.0	0.0	-36.8
240	425499.96	5409458.22	299.79	0	DEN	4000	58.8	22.8	0.0	0.0	0.0	81.0	104.1	-1.7	0.0	0.0	15.9	0.0	0.0	-117.7
240	425499.96	5409458.22	299.79	0	DEN	8000	49.9	22.8	0.0	0.0	0.0	81.0	371.2	-1.7	0.0	0.0	18.8	0.0	0.0	-396.6
258	426080.39	5409381.88	341.58	0	DEN	32	37.5	21.4	0.0	0.0	0.0	79.9	0.1	-5.7	0.0	0.0	4.8	0.0	0.0	-20.1
258	426080.39	5409381.88	341.58	0	DEN	63	55.4	21.4	0.0	0.0	0.0	79.9	0.3	-5.7	0.0	0.0	4.8	0.0	0.0	-2.5
258	426080.39	5409381.88	341.58	0	DEN	125	62.3	21.4	0.0	0.0	0.0	79.9	1.1	2.1	0.0	0.0	2.6	0.0	0.0	-2.1
258	426080.39	5409381.88	341.58	0	DEN	250	63.1	21.4	0.0	0.0	0.0	79.9	2.9	-0.3	0.0	0.0	4.8	0.0	0.0	-2.8
258	426080.39	5409381.88	341.58	0	DEN	500	66.5	21.4	0.0	0.0	0.0	79.9	5.4	-1.7	0.0	0.0	4.8	0.0	0.0	-0.5
258	426080.39	5409381.88	341.58	0	DEN	1000	65.9	21.4	0.0	0.0	0.0	79.9	10.2	-1.7	0.0	0.0	4.8	0.0	0.0	-5.9
258	426080.39	5409381.88	341.58	0	DEN	2000	63.7	21.4	0.0	0.0	0.0	79.9	27.0	-1.7	0.0	0.0	4.9	0.0	0.0	-24.9
258	426080.39	5409381.88	341.58	0	DEN	4000	58.8	21.4	0.0	0.0	0.0	79.9	91.4	-1.7	0.0	0.0	5.0	0.0	0.0	-94.4
258	426080.39	5409381.88	341.58	0	DEN	8000	49.9	21.4	0.0	0.0	0.0	79.9	326.0	-1.7	0.0	0.0	5.2	0.0	0.0	-338.1
260	426580.65	5409592.39	378.09	0	DEN	32	37.5	21.5	0.0	0.0	0.0	79.9	0.1	-5.7	0.0	0.0	0.0	0.0	0.0	-15.3
260	426580.65	5409592.39	378.09	0	DEN	63	55.4	21.5	0.0	0.0	0.0	79.9	0.3	-5.7	0.0	0.0	0.0	0.0	0.0	2.3
260	426580.65	5409592.39	378.09	0	DEN	125	62.3	21.5	0.0	0.0	0.0	79.9	1.1	4.1	0.0	0.0	0.0	0.0	0.0	-1.4
260	426580.65	5409592.39	378.09	0	DEN	250	63.1	21.5	0.0	0.0	0.0	79.9	2.9	0.9	0.0	0.0	0.0	0.0	0.0	0.9
260	426580.65	5409592.39	378.09	0	DEN	500	66.5	21.5	0.0	0.0	0.0	79.9	5.4	-1.2	0.0	0.0	0.0	0.0	0.0	3.9
260	426580.65	5409592.39	378.09	0	DEN	1000	65.9	21.5	0.0	0.0	0.0	79.9	10.2	-1.2	0.0	0.0	0.0	0.0	0.0	-1.5
260	426580.65	5409592.39	378.09	0	DEN	2000	63.7	21.5	0.0	0.0	0.0	79.9	26.9	-1.2	0.0	0.0	0.0	0.0	0.0	-20.4
260	426580.65	5409592.39	378.09	0	DEN	4000	58.8	21.5	0.0	0.0	0.0	79.9	91.1	-1.2	0.0	0.0	0.0	0.0	0.0	-89.5
260	426580.65	5409592.39	378.09	0	DEN	8000	49.9	21.5	0.0	0.0	0.0	79.9	324.9	-1.2	0.0	0.0	0.0	0.0	0.0	-332.2
267	427333.30	5409813.47	388.46	0	DEN	32	37.5	21.6	0.0	0.0	0.0	80.1	0.1	-5.7	0.0	0.0	4.8	0.0	0.0	-20.2
267	427333.30	5409813.47	388.46	0	DEN	63	55.4	21.6	0.0	0.0	0.0	80.1	0.3	-5.7	0.0	0.0	4.8	0.0	0.0	-2.5
267	427333.30	5409813.47	388.46	0	DEN	125	62.3	21.6	0.0	0.0	0.0	80.1	1.2	1.2	0.0	0.0	3.6	0.0	0.0	-2.2
267	427333.30	5409813.47	388.46	0	DEN	250	63.1	21.6	0.0	0.0	0.0	80.1	3.0	-1.2	0.0	0.0	4.8	0.0	0.0	-1.9
267	427333.30	5409813.47	388.46	0	DEN	500	66.5	21.6	0.0	0.0	0.0	80.1	5.5	-2.6	0.0	0.0	4.8	0.0	0.0	0.3
267	427333.30	5409813.47	388.46	0	DEN	1000	65.9	21.6	0.0	0.0	0.0	80.1	10.5	-2.6	0.0	0.0	4.8	0.0	0.0	-5.2
267	427333.30	5409813.47	388.46	0	DEN	2000	63.7	21.6	0.0	0.0	0.0	80.1	27.7	-2.6	0.0	0.0	4.8	0.0	0.0	-24.6
267	427333.30	5409813.47	388.46	0	DEN	4000	58.8	21.6	0.0	0.0	0.0	80.1	93.9	-2.6	0.0	0.0	4.8	0.0	0.0	-95.7

Line Source, ISO 9613, Name: "TRE_OP-PAG", ID: ""																				
Nr.	X	Y	Z	Refl.	DEN	Freq.	Lw	l/a	Optime	K0	Dc	Adiv	Aatm	Agr	Afol	Ahous	Abar	Cmet	RL	Lr
	(m)	(m)	(m)			(Hz)	dB(A)	dB	dB	(dB)	(dB)	(dB)	(dB)	(dB)	(dB)	(dB)	(dB)	(dB)	(dB)	dB(A)
267	427333.30	5409813.47	388.46	0	DEN	8000	49.9	21.6	0.0	0.0	0.0	80.1	334.7	-2.6	0.0	0.0	4.8	0.0	0.0	-345.5
333	426860.96	5409699.37	379.78	0	DEN	32	37.5	20.1	0.0	0.0	0.0	80.0	0.1	-5.7	0.0	0.0	0.0	0.0	0.0	-16.7
333	426860.96	5409699.37	379.78	0	DEN	63	55.4	20.1	0.0	0.0	0.0	80.0	0.3	-5.7	0.0	0.0	0.0	0.0	0.0	0.9
333	426860.96	5409699.37	379.78	0	DEN	125	62.3	20.1	0.0	0.0	0.0	80.0	1.2	1.7	0.0	0.0	0.0	0.0	0.0	-0.4
333	426860.96	5409699.37	379.78	0	DEN	250	63.1	20.1	0.0	0.0	0.0	80.0	2.9	-0.7	0.0	0.0	0.0	0.0	0.0	1.0
333	426860.96	5409699.37	379.78	0	DEN	500	66.5	20.1	0.0	0.0	0.0	80.0	5.4	-2.1	0.0	0.0	0.0	0.0	0.0	3.3
333	426860.96	5409699.37	379.78	0	DEN	1000	65.9	20.1	0.0	0.0	0.0	80.0	10.3	-2.1	0.0	0.0	0.0	0.0	0.0	-2.1
333	426860.96	5409699.37	379.78	0	DEN	2000	63.7	20.1	0.0	0.0	0.0	80.0	27.2	-2.1	0.0	0.0	0.0	0.0	0.0	-21.2
333	426860.96	5409699.37	379.78	0	DEN	4000	58.8	20.1	0.0	0.0	0.0	80.0	92.1	-2.1	0.0	0.0	0.0	0.0	0.0	-91.0
333	426860.96	5409699.37	379.78	0	DEN	8000	49.9	20.1	0.0	0.0	0.0	80.0	328.4	-2.1	0.0	0.0	0.0	0.0	0.0	-336.3
334	427521.39	5409886.02	381.71	0	DEN	32	37.5	20.4	0.0	0.0	0.0	80.4	0.1	-5.7	0.0	0.0	4.8	0.0	0.0	-21.6
334	427521.39	5409886.02	381.71	0	DEN	63	55.4	20.4	0.0	0.0	0.0	80.4	0.4	-5.7	0.0	0.0	4.8	0.0	0.0	-3.9
334	427521.39	5409886.02	381.71	0	DEN	125	62.3	20.4	0.0	0.0	0.0	80.4	1.2	1.2	0.0	0.0	3.5	0.0	0.0	-3.6
334	427521.39	5409886.02	381.71	0	DEN	250	63.1	20.4	0.0	0.0	0.0	80.4	3.1	-1.2	0.0	0.0	4.8	0.0	0.0	-3.5
334	427521.39	5409886.02	381.71	0	DEN	500	66.5	20.4	0.0	0.0	0.0	80.4	5.7	-2.6	0.0	0.0	4.8	0.0	0.0	-1.3
334	427521.39	5409886.02	381.71	0	DEN	1000	65.9	20.4	0.0	0.0	0.0	80.4	10.7	-2.6	0.0	0.0	4.8	0.0	0.0	-7.0
334	427521.39	5409886.02	381.71	0	DEN	2000	63.7	20.4	0.0	0.0	0.0	80.4	28.4	-2.6	0.0	0.0	4.8	0.0	0.0	-26.8
334	427521.39	5409886.02	381.71	0	DEN	4000	58.8	20.4	0.0	0.0	0.0	80.4	96.2	-2.6	0.0	0.0	4.8	0.0	0.0	-99.5
334	427521.39	5409886.02	381.71	0	DEN	8000	49.9	20.4	0.0	0.0	0.0	80.4	343.0	-2.6	0.0	0.0	4.8	0.0	0.0	-355.3
344	426954.21	5409723.21	387.28	0	DEN	32	37.5	19.6	0.0	0.0	0.0	80.0	0.1	-5.7	0.0	0.0	0.0	0.0	0.0	-17.2
344	426954.21	5409723.21	387.28	0	DEN	63	55.4	19.6	0.0	0.0	0.0	80.0	0.3	-5.7	0.0	0.0	0.0	0.0	0.0	0.4
344	426954.21	5409723.21	387.28	0	DEN	125	62.3	19.6	0.0	0.0	0.0	80.0	1.2	1.8	0.0	0.0	0.0	0.0	0.0	-1.0
344	426954.21	5409723.21	387.28	0	DEN	250	63.1	19.6	0.0	0.0	0.0	80.0	2.9	-0.7	0.0	0.0	0.0	0.0	0.0	0.5
344	426954.21	5409723.21	387.28	0	DEN	500	66.5	19.6	0.0	0.0	0.0	80.0	5.4	-2.1	0.0	0.0	0.0	0.0	0.0	2.8
344	426954.21	5409723.21	387.28	0	DEN	1000	65.9	19.6	0.0	0.0	0.0	80.0	10.3	-2.1	0.0	0.0	0.0	0.0	0.0	-2.7
344	426954.21	5409723.21	387.28	0	DEN	2000	63.7	19.6	0.0	0.0	0.0	80.0	27.2	-2.1	0.0	0.0	0.0	0.0	0.0	-21.8
344	426954.21	5409723.21	387.28	0	DEN	4000	58.8	19.6	0.0	0.0	0.0	80.0	92.3	-2.1	0.0	0.0	0.0	0.0	0.0	-91.8
344	426954.21	5409723.21	387.28	0	DEN	8000	49.9	19.6	0.0	0.0	0.0	80.0	329.1	-2.1	0.0	0.0	0.0	0.0	0.0	-337.5
361	426184.20	5409402.91	351.81	0	DEN	32	37.5	19.1	0.0	0.0	0.0	79.8	0.1	-5.7	0.0	0.0	4.8	0.0	0.0	-22.4
361	426184.20	5409402.91	351.81	0	DEN	63	55.4	19.1	0.0	0.0	0.0	79.8	0.3	-5.7	0.0	0.0	4.8	0.0	0.0	-4.8
361	426184.20	5409402.91	351.81	0	DEN	125	62.3	19.1	0.0	0.0	0.0	79.8	1.1	2.1	0.0	0.0	2.7	0.0	0.0	-4.4
361	426184.20	5409402.91	351.81	0	DEN	250	63.1	19.1	0.0	0.0	0.0	79.8	2.9	-0.3	0.0	0.0	4.9	0.0	0.0	-5.1
361	426184.20	5409402.91	351.81	0	DEN	500	66.5	19.1	0.0	0.0	0.0	79.8	5.3	-1.7	0.0	0.0	5.0	0.0	0.0	-2.8
361	426184.20	5409402.91	351.81	0	DEN	1000	65.9	19.1	0.0	0.0	0.0	79.8	10.1	-1.7	0.0	0.0	5.1	0.0	0.0	-8.4
361	426184.20	5409402.91	351.81	0	DEN	2000	63.7	19.1	0.0	0.0	0.0	79.8	26.7	-1.7	0.0	0.0	5.5	0.0	0.0	-27.5
361	426184.20	5409402.91	351.81	0	DEN	4000	58.8	19.1	0.0	0.0	0.0	79.8	90.4	-1.7	0.0	0.0	6.1	0.0	0.0	-96.7
361	426184.20	5409402.91	351.81	0	DEN	8000	49.9	19.1	0.0	0.0	0.0	79.8	322.4	-1.7	0.0	0.0	7.1	0.0	0.0	-338.6
419	426315.73	5409599.88	366.27	0	DEN	32	37.5	17.3	0.0	0.0	0.0	80.2	0.1	-5.7	0.0	0.0	4.8	0.0	0.0	-24.5
419	426315.73	5409599.88	366.27	0	DEN	63	55.4	17.3	0.0	0.0	0.0	80.2	0.4	-5.7	0.0	0.0	4.8	0.0	0.0	-6.9
419	426315.73	5409599.88	366.27	0	DEN	125	62.3	17.3	0.0	0.0	0.0	80.2	1.2	5.0	0.0	0.0	0.0	0.0	0.0	-6.8
419	426315.73	5409599.88	366.27	0	DEN	250	63.1	17.3	0.0	0.0	0.0	80.2	3.0	1.5	0.0	0.0	3.2	0.0	0.0	-7.6
419	426315.73	5409599.88	366.27	0	DEN	500	66.5	17.3	0.0	0.0	0.0	80.2	5.6	-0.9	0.0	0.0	4.8	0.0	0.0	-5.8
419	426315.73	5409599.88	366.27	0	DEN	1000	65.9	17.3	0.0	0.0	0.0	80.2	10.5	-0.9	0.0	0.0	4.8	0.0	0.0	-11.4
419	426315.73	5409599.88	366.27	0	DEN	2000	63.7	17.3	0.0	0.0	0.0	80.2	27.8	-0.9	0.0	0.0	4.8	0.0	0.0	-30.9
419	426315.73	5409599.88	366.27	0	DEN	4000	58.8	17.3	0.0	0.0	0.0	80.2	94.4	-0.9	0.0	0.0	4.8	0.0	0.0	-102.3
419	426315.73	5409599.88	366.27	0	DEN	8000	49.9	17.3	0.0	0.0	0.0	80.2	336.7	-0.9	0.0	0.0	4.8	0.0	0.0	-353.5
433	427422.81	5409841.02	384.74	0	DEN	32	37.5	16.5	0.0	0.0	0.0	80.2	0.1	-5.7	0.0	0.0	4.8	0.0	0.0	-25.3
433	427422.81	5409841.02	384.74	0	DEN	63	55.4	16.5	0.0	0.0	0.0	80.2	0.4	-5.7	0.0	0.0	4.8	0.0	0.0	-7.7
433	427422.81	5409841.02	384.74	0	DEN	125	62.3	16.5	0.0	0.0	0.0	80.2	1.2	1.2	0.0	0.0	3.5	0.0	0.0	-7.3
433	427422.81	5409841.02	384.74	0	DEN	250	63.1	16.5	0.0	0.0	0.0	80.2	3.0	-1.2	0.0	0.0	4.8	0.0	0.0	-7.2
433	427422.81	5409841.02	384.74	0	DEN	500	66.5	16.5	0.0	0.0	0.0	80.2	5.6	-2.6	0.0	0.0	4.8	0.0	0.0	-4.9
433	427422.81	5409841.02	384.74	0	DEN	1000	65.9	16.5	0.0	0.0	0.0	80.2	10.6	-2.6	0.0	0.0	4.8	0.0	0.0	-10.5
433	427422.81	5409841.02	384.74	0	DEN	2000	63.7	16.5	0.0	0.0	0.0	80.2	27.9	-2.6	0.0	0.0	4.8	0.0	0.0	-30.1
433	427422.81	5409841.02	384.74	0	DEN	4000	58.8	16.5	0.0	0.0	0.0	80.2	94.7	-2.6	0.0	0.0	4.8	0.0	0.0	-101.8
433	427422.81	5409841.02	384.74	0	DEN	8000	49.9	16.5	0.0	0.0	0.0	80.2	337.7	-2.6	0.0	0.0	4.8	0.0	0.0	-353.7
480	427454.68	5409862.58	382.80	0	DEN	32	37.5	15.1	0.0	0.0	0.0	80.3	0.1	-5.7	0.0	0.0	4.8	0.0	0.0	-26.9
480	427454.68	5409862.58	382.80	0	DEN	63	55.4	15.1	0.0	0.0	0.0	80.3	0.4	-5.7	0.0	0.0	4.8	0.0	0.0	-9.2
480	427454.68	5409862.58	382.80	0	DEN	125	62.3	15.1	0.0	0.0	0.0	80.3	1.2	1.2	0.0	0.0	3.5	0.0	0.0	-8.9
480	427454.68	5409862.58	382.80	0	DEN	250	63.1	15.1	0.0	0.0	0.0	80.3	3.0	-1.2	0.0	0.0	4.8	0.0	0.0	-8.7
480	427454.68	5409862.58	382.80	0	DEN	500	66.5	15.1	0.0	0.0	0.0	80.3	5.6	-2.6	0.0	0.0	4.8	0.0	0.0	-6.5
480	427454.68	5409862.58	382.80	0	DEN	1000	65.9	15.1	0.0	0.0	0.0	80.3	10.6	-2.6	0.0	0.0	4.8	0.0	0.0	-12.1
480	427454.68	5409862.58	382.80	0	DEN	2000	63.7	15.1	0.0	0.0	0.0	80.3	28.1	-2.6	0.0	0.0	4.8	0.0	0.0	-31.8
480	427454.68	5409862.58	382.80	0	DEN	4000	58.8	15.1	0.0	0.0	0.0	80.3	95.4	-2.6	0.0	0.0	4.8	0.0	0.0	-104.0

Line Source, ISO 9613, Name: "TRE_OP-PAG", ID: ""																				
Nr.	X	Y	Z	Refl.	DEN	Freq.	Lw	l/a	Optime	K0	Dc	Adiv	Aatm	Agr	Afol	Ahous	Abar	Cmet	RL	Lr
	(m)	(m)	(m)			(Hz)	dB(A)	dB	dB	(dB)	(dB)	(dB)	(dB)	(dB)	(dB)	(dB)	(dB)	(dB)	(dB)	dB(A)
480	427454.68	5409862.58	382.80	0	DEN	8000	49.9	15.1	0.0	0.0	0.0	80.3	340.2	-2.6	0.0	0.0	4.8	0.0	0.0	-357.7

Line Source, ISO 9613, Name: "MGR_PAG", ID: ""																				
Nr.	X	Y	Z	Refl.	DEN	Freq.	Lw	l/a	Optime	K0	Dc	Adiv	Aatm	Agr	Afol	Ahous	Abar	Cmet	RL	Lr
	(m)	(m)	(m)			(Hz)	dB(A)	dB	dB	(dB)	(dB)	(dB)	(dB)	(dB)	(dB)	(dB)	(dB)	(dB)	(dB)	dB(A)
173	425801.66	5409408.25	323.64	0	DEN	32	29.1	26.3	0.0	0.0	0.0	80.4	0.1	-5.7	0.0	0.0	4.8	0.0	0.0	-24.2
173	425801.66	5409408.25	323.64	0	DEN	63	46.6	26.3	0.0	0.0	0.0	80.4	0.4	-5.7	0.0	0.0	4.8	0.0	0.0	-7.0
173	425801.66	5409408.25	323.64	0	DEN	125	58.3	26.3	0.0	0.0	0.0	80.4	1.2	2.2	0.0	0.0	2.6	0.0	0.0	-1.9
173	425801.66	5409408.25	323.64	0	DEN	250	60.9	26.3	0.0	0.0	0.0	80.4	3.1	-0.2	0.0	0.0	4.8	0.0	0.0	-0.9
173	425801.66	5409408.25	323.64	0	DEN	500	65.1	26.3	0.0	0.0	0.0	80.4	5.7	-1.6	0.0	0.0	4.8	0.0	0.0	2.1
173	425801.66	5409408.25	323.64	0	DEN	1000	65.6	26.3	0.0	0.0	0.0	80.4	10.8	-1.6	0.0	0.0	4.9	0.0	0.0	-2.6
173	425801.66	5409408.25	323.64	0	DEN	2000	64.3	26.3	0.0	0.0	0.0	80.4	28.6	-1.6	0.0	0.0	4.9	0.0	0.0	-21.8
173	425801.66	5409408.25	323.64	0	DEN	4000	60.4	26.3	0.0	0.0	0.0	80.4	96.9	-1.6	0.0	0.0	5.1	0.0	0.0	-94.2
173	425801.66	5409408.25	323.64	0	DEN	8000	55.1	26.3	0.0	0.0	0.0	80.4	345.8	-1.6	0.0	0.0	5.4	0.0	0.0	-348.7
176	427759.53	5409933.40	377.85	0	DEN	32	29.1	26.2	0.0	0.0	0.0	80.5	0.1	-5.7	0.0	0.0	4.8	0.0	0.0	-24.3
176	427759.53	5409933.40	377.85	0	DEN	63	46.6	26.2	0.0	0.0	0.0	80.5	0.4	-5.7	0.0	0.0	4.8	0.0	0.0	-7.1
176	427759.53	5409933.40	377.85	0	DEN	125	58.3	26.2	0.0	0.0	0.0	80.5	1.2	1.5	0.0	0.0	3.3	0.0	0.0	-2.0
176	427759.53	5409933.40	377.85	0	DEN	250	60.9	26.2	0.0	0.0	0.0	80.5	3.1	-1.0	0.0	0.0	4.8	0.0	0.0	-0.3
176	427759.53	5409933.40	377.85	0	DEN	500	65.1	26.2	0.0	0.0	0.0	80.5	5.8	-2.3	0.0	0.0	4.8	0.0	0.0	2.6
176	427759.53	5409933.40	377.85	0	DEN	1000	65.6	26.2	0.0	0.0	0.0	80.5	11.0	-2.3	0.0	0.0	4.8	0.0	0.0	-2.1
176	427759.53	5409933.40	377.85	0	DEN	2000	64.3	26.2	0.0	0.0	0.0	80.5	29.0	-2.3	0.0	0.0	4.8	0.0	0.0	-21.4
176	427759.53	5409933.40	377.85	0	DEN	4000	60.4	26.2	0.0	0.0	0.0	80.5	98.2	-2.3	0.0	0.0	4.8	0.0	0.0	-94.5
176	427759.53	5409933.40	377.85	0	DEN	8000	55.1	26.2	0.0	0.0	0.0	80.5	350.3	-2.3	0.0	0.0	4.8	0.0	0.0	-352.0
201	427130.64	5409764.07	392.31	0	DEN	32	29.1	24.3	0.0	0.0	0.0	80.0	0.1	-5.7	0.0	0.0	0.0	0.0	0.0	-21.0
201	427130.64	5409764.07	392.31	0	DEN	63	46.6	24.3	0.0	0.0	0.0	80.0	0.3	-5.7	0.0	0.0	0.0	0.0	0.0	-3.7
201	427130.64	5409764.07	392.31	0	DEN	125	58.3	24.3	0.0	0.0	0.0	80.0	1.2	1.8	0.0	0.0	0.0	0.0	0.0	-0.4
201	427130.64	5409764.07	392.31	0	DEN	250	60.9	24.3	0.0	0.0	0.0	80.0	3.0	-0.6	0.0	0.0	0.0	0.0	0.0	2.9
201	427130.64	5409764.07	392.31	0	DEN	500	65.1	24.3	0.0	0.0	0.0	80.0	5.5	-2.0	0.0	0.0	0.0	0.0	0.0	6.0
201	427130.64	5409764.07	392.31	0	DEN	1000	65.6	24.3	0.0	0.0	0.0	80.0	10.4	-2.0	0.0	0.0	0.0	0.0	0.0	1.6
201	427130.64	5409764.07	392.31	0	DEN	2000	64.3	24.3	0.0	0.0	0.0	80.0	27.4	-2.0	0.0	0.0	0.0	0.0	0.0	-16.7
201	427130.64	5409764.07	392.31	0	DEN	4000	60.4	24.3	0.0	0.0	0.0	80.0	92.7	-2.0	0.0	0.0	0.0	0.0	0.0	-86.0
201	427130.64	5409764.07	392.31	0	DEN	8000	55.1	24.3	0.0	0.0	0.0	80.0	330.8	-2.0	0.0	0.0	0.0	0.0	0.0	-329.4
247	426731.13	5409642.73	379.00	0	DEN	32	29.1	22.6	0.0	0.0	0.0	79.9	0.1	-5.7	0.0	0.0	4.8	0.0	0.0	-27.4
247	426731.13	5409642.73	379.00	0	DEN	63	46.6	22.6	0.0	0.0	0.0	79.9	0.3	-5.7	0.0	0.0	4.8	0.0	0.0	-10.1
247	426731.13	5409642.73	379.00	0	DEN	125	58.3	22.6	0.0	0.0	0.0	79.9	1.1	1.8	0.0	0.0	3.0	0.0	0.0	-5.0
247	426731.13	5409642.73	379.00	0	DEN	250	60.9	22.6	0.0	0.0	0.0	79.9	2.9	-0.7	0.0	0.0	4.8	0.0	0.0	-3.4
247	426731.13	5409642.73	379.00	0	DEN	500	65.1	22.6	0.0	0.0	0.0	79.9	5.4	-2.1	0.0	0.0	4.8	0.0	0.0	-0.3
247	426731.13	5409642.73	379.00	0	DEN	1000	65.6	22.6	0.0	0.0	0.0	79.9	10.2	-2.1	0.0	0.0	4.9	0.0	0.0	-4.7
247	426731.13	5409642.73	379.00	0	DEN	2000	64.3	22.6	0.0	0.0	0.0	79.9	26.9	-2.1	0.0	0.0	4.9	0.0	0.0	-22.8
247	426731.13	5409642.73	379.00	0	DEN	4000	60.4	22.6	0.0	0.0	0.0	79.9	91.3	-2.1	0.0	0.0	5.1	0.0	0.0	-91.2
247	426731.13	5409642.73	379.00	0	DEN	8000	55.1	22.6	0.0	0.0	0.0	79.9	325.5	-2.1	0.0	0.0	5.4	0.0	0.0	-331.1
249	426423.02	5409600.02	372.09	0	DEN	32	29.1	22.6	0.0	0.0	0.0	80.1	0.1	-5.7	0.0	0.0	4.8	0.0	0.0	-27.5
249	426423.02	5409600.02	372.09	0	DEN	63	46.6	22.6	0.0	0.0	0.0	80.1	0.3	-5.7	0.0	0.0	4.8	0.0	0.0	-10.3
249	426423.02	5409600.02	372.09	0	DEN	125	58.3	22.6	0.0	0.0	0.0	80.1	1.2	2.0	0.0	0.0	2.7	0.0	0.0	-5.1
249	426423.02	5409600.02	372.09	0	DEN	250	60.9	22.6	0.0	0.0	0.0	80.1	3.0	-0.4	0.0	0.0	4.8	0.0	0.0	-3.9
249	426423.02	5409600.02	372.09	0	DEN	500	65.1	22.6	0.0	0.0	0.0	80.1	5.5	-1.8	0.0	0.0	4.8	0.0	0.0	-0.8
249	426423.02	5409600.02	372.09	0	DEN	1000	65.6	22.6	0.0	0.0	0.0	80.1	10.4	-1.8	0.0	0.0	4.8	0.0	0.0	-5.2
249	426423.02	5409600.02	372.09	0	DEN	2000	64.3	22.6	0.0	0.0	0.0	80.1	27.4	-1.8	0.0	0.0	4.8	0.0	0.0	-23.6
249	426423.02	5409600.02	372.09	0	DEN	4000	60.4	22.6	0.0	0.0	0.0	80.1	93.1	-1.8	0.0	0.0	4.8	0.0	0.0	-93.1
249	426423.02	5409600.02	372.09	0	DEN	8000	55.1	22.6	0.0	0.0	0.0	80.1	332.0	-1.8	0.0	0.0	4.8	0.0	0.0	-337.3
250	426257.88	5409501.70	362.21	0	DEN	32	29.1	22.5	0.0	0.0	0.0	80.0	0.1	-5.7	0.0	0.0	4.8	0.0	0.0	-27.6
250	426257.88	5409501.70	362.21	0	DEN	63	46.6	22.5	0.0	0.0	0.0	80.0	0.3	-5.7	0.0	0.0	4.8	0.0	0.0	-10.3
250	426257.88	5409501.70	362.21	0	DEN	125	58.3	22.5	0.0	0.0	0.0	80.0	1.2	2.3	0.0	0.0	2.5	0.0	0.0	-5.2
250	426257.88	5409501.70	362.21	0	DEN	250	60.9	22.5	0.0	0.0	0.0	80.0	2.9	-0.1	0.0	0.0	4.8	0.0	0.0	-4.2
250	426257.88	5409501.70	362.21	0	DEN	500	65.1	22.5	0.0	0.0	0.0	80.0	5.4	-1.5	0.0	0.0	4.8	0.0	0.0	-1.1
250	426257.88	5409501.70	362.21	0	DEN	1000	65.6	22.5	0.0	0.0	0.0	80.0	10.3	-1.5	0.0	0.0	4.8	0.0	0.0	-5.5
250	426257.88	5409501.70	362.21	0	DEN	2000	64.3	22.5	0.0	0.0	0.0	80.0	27.2	-1.5	0.0	0.0	4.8	0.0	0.0	-23.7
250	426257.88	5409501.70	362.21	0	DEN	4000	60.4	22.5	0.0	0.0	0.0	80.0	92.2	-1.5	0.0	0.0	4.8	0.0	0.0	-92.6
250	426257.88	5409501.70	362.21	0	DEN	8000	55.1	22.5	0.0	0.0	0.0	80.0	329.0	-1.5	0.0	0.0	4.8	0.0	0.0	-334.6
279	425499.96	5409458.22	299.79	0	DEN	32	29.1	22.8	0.0	0.0	0.0	81.0	0.1	-5.8	0.0	0.0	5.2	0.0	0.0	-28.6
279	425499.96	5409458.22	299.79	0	DEN	63	46.6	22.8	0.0	0.0	0.0	81.0	0.4	-5.8	0.0	0.0	5.5	0.0	0.0	-11.8
279	425499.96	5409458.22	299.79	0	DEN	125	58.3	22.8	0.0	0.0	0.0	81.0	1.3	2.2	0.0	0.0	4.0	0.0	0.0	-7.4
279	425499.96	5409458.22	299.79	0	DEN	250	60.9	22.8	0.0	0.0	0.0	81.0	3.3	-0.3	0.0	0.0	7.2	0.0	0.0	-7.5

Line Source, ISO 9613, Name: "MGR_PAG", ID: ""																					
Nr.	X	Y	Z	Refl.	DEN	Freq.	Lw	l/a	Optime	K0	Dc	Adiv	Aatm	Agr	Afol	Ahous	Abar	Cmet	RL	Lr
	(m)	(m)	(m)			(Hz)	dB(A)	dB	dB	(dB)	(dB)	(dB)	(dB)	(dB)	(dB)	(dB)	(dB)	(dB)	(dB)	dB(A)
279	425499.96	5409458.22	299.79	0	DEN	500	65.1	22.8	0.0	0.0	0.0	81.0	6.1	-1.7	0.0	0.0	8.8	0.0	0.0	-6.3
279	425499.96	5409458.22	299.79	0	DEN	1000	65.6	22.8	0.0	0.0	0.0	81.0	11.6	-1.7	0.0	0.0	10.8	0.0	0.0	-13.3
279	425499.96	5409458.22	299.79	0	DEN	2000	64.3	22.8	0.0	0.0	0.0	81.0	30.7	-1.7	0.0	0.0	13.2	0.0	0.0	-36.2
279	425499.96	5409458.22	299.79	0	DEN	4000	60.4	22.8	0.0	0.0	0.0	81.0	104.1	-1.7	0.0	0.0	15.9	0.0	0.0	-116.1
279	425499.96	5409458.22	299.79	0	DEN	8000	55.1	22.8	0.0	0.0	0.0	81.0	371.2	-1.7	0.0	0.0	18.8	0.0	0.0	-391.4
310	426080.39	5409381.88	341.58	0	DEN	32	29.1	21.4	0.0	0.0	0.0	79.9	0.1	-5.7	0.0	0.0	4.8	0.0	0.0	-28.5
310	426080.39	5409381.88	341.58	0	DEN	63	46.6	21.4	0.0	0.0	0.0	79.9	0.3	-5.7	0.0	0.0	4.8	0.0	0.0	-11.3
310	426080.39	5409381.88	341.58	0	DEN	125	58.3	21.4	0.0	0.0	0.0	79.9	1.1	2.1	0.0	0.0	2.6	0.0	0.0	-6.1
310	426080.39	5409381.88	341.58	0	DEN	250	60.9	21.4	0.0	0.0	0.0	79.9	2.9	-0.3	0.0	0.0	4.8	0.0	0.0	-5.0
310	426080.39	5409381.88	341.58	0	DEN	500	65.1	21.4	0.0	0.0	0.0	79.9	5.4	-1.7	0.0	0.0	4.8	0.0	0.0	-1.8
310	426080.39	5409381.88	341.58	0	DEN	1000	65.6	21.4	0.0	0.0	0.0	79.9	10.2	-1.7	0.0	0.0	4.8	0.0	0.0	-6.2
310	426080.39	5409381.88	341.58	0	DEN	2000	64.3	21.4	0.0	0.0	0.0	79.9	27.0	-1.7	0.0	0.0	4.9	0.0	0.0	-24.3
310	426080.39	5409381.88	341.58	0	DEN	4000	60.4	21.4	0.0	0.0	0.0	79.9	91.4	-1.7	0.0	0.0	5.0	0.0	0.0	-92.8
310	426080.39	5409381.88	341.58	0	DEN	8000	55.1	21.4	0.0	0.0	0.0	79.9	326.0	-1.7	0.0	0.0	5.2	0.0	0.0	-332.9
312	426580.65	5409592.39	378.09	0	DEN	32	29.1	21.5	0.0	0.0	0.0	79.9	0.1	-5.7	0.0	0.0	0.0	0.0	0.0	-23.7
312	426580.65	5409592.39	378.09	0	DEN	63	46.6	21.5	0.0	0.0	0.0	79.9	0.3	-5.7	0.0	0.0	0.0	0.0	0.0	-6.4
312	426580.65	5409592.39	378.09	0	DEN	125	58.3	21.5	0.0	0.0	0.0	79.9	1.1	4.1	0.0	0.0	0.0	0.0	0.0	-5.3
312	426580.65	5409592.39	378.09	0	DEN	250	60.9	21.5	0.0	0.0	0.0	79.9	2.9	0.9	0.0	0.0	0.0	0.0	0.0	-1.3
312	426580.65	5409592.39	378.09	0	DEN	500	65.1	21.5	0.0	0.0	0.0	79.9	5.4	-1.2	0.0	0.0	0.0	0.0	0.0	2.5
312	426580.65	5409592.39	378.09	0	DEN	1000	65.6	21.5	0.0	0.0	0.0	79.9	10.2	-1.2	0.0	0.0	0.0	0.0	0.0	-1.8
312	426580.65	5409592.39	378.09	0	DEN	2000	64.3	21.5	0.0	0.0	0.0	79.9	26.9	-1.2	0.0	0.0	0.0	0.0	0.0	-19.8
312	426580.65	5409592.39	378.09	0	DEN	4000	60.4	21.5	0.0	0.0	0.0	79.9	91.1	-1.2	0.0	0.0	0.0	0.0	0.0	-87.9
312	426580.65	5409592.39	378.09	0	DEN	8000	55.1	21.5	0.0	0.0	0.0	79.9	324.9	-1.2	0.0	0.0	0.0	0.0	0.0	-327.0
315	427333.83	5409813.87	388.43	0	DEN	32	29.1	21.7	0.0	0.0	0.0	80.1	0.1	-5.7	0.0	0.0	4.8	0.0	0.0	-28.5
315	427333.83	5409813.87	388.43	0	DEN	63	46.6	21.7	0.0	0.0	0.0	80.1	0.3	-5.7	0.0	0.0	4.8	0.0	0.0	-11.3
315	427333.83	5409813.87	388.43	0	DEN	125	58.3	21.7	0.0	0.0	0.0	80.1	1.2	1.2	0.0	0.0	3.6	0.0	0.0	-6.1
315	427333.83	5409813.87	388.43	0	DEN	250	60.9	21.7	0.0	0.0	0.0	80.1	3.0	-1.2	0.0	0.0	4.8	0.0	0.0	-4.1
315	427333.83	5409813.87	388.43	0	DEN	500	65.1	21.7	0.0	0.0	0.0	80.1	5.5	-2.6	0.0	0.0	4.8	0.0	0.0	-1.0
315	427333.83	5409813.87	388.43	0	DEN	1000	65.6	21.7	0.0	0.0	0.0	80.1	10.5	-2.6	0.0	0.0	4.8	0.0	0.0	-5.5
315	427333.83	5409813.87	388.43	0	DEN	2000	64.3	21.7	0.0	0.0	0.0	80.1	27.7	-2.6	0.0	0.0	4.8	0.0	0.0	-24.0
315	427333.83	5409813.87	388.43	0	DEN	4000	60.4	21.7	0.0	0.0	0.0	80.1	93.9	-2.6	0.0	0.0	4.8	0.0	0.0	-94.1
315	427333.83	5409813.87	388.43	0	DEN	8000	55.1	21.7	0.0	0.0	0.0	80.1	334.8	-2.6	0.0	0.0	4.8	0.0	0.0	-340.3
356	426860.96	5409699.37	379.78	0	DEN	32	29.1	20.1	0.0	0.0	0.0	80.0	0.1	-5.7	0.0	0.0	0.0	0.0	0.0	-25.1
356	426860.96	5409699.37	379.78	0	DEN	63	46.6	20.1	0.0	0.0	0.0	80.0	0.3	-5.7	0.0	0.0	0.0	0.0	0.0	-7.9
356	426860.96	5409699.37	379.78	0	DEN	125	58.3	20.1	0.0	0.0	0.0	80.0	1.2	1.7	0.0	0.0	0.0	0.0	0.0	-4.4
356	426860.96	5409699.37	379.78	0	DEN	250	60.9	20.1	0.0	0.0	0.0	80.0	2.9	-0.7	0.0	0.0	0.0	0.0	0.0	-1.1
356	426860.96	5409699.37	379.78	0	DEN	500	65.1	20.1	0.0	0.0	0.0	80.0	5.4	-2.1	0.0	0.0	0.0	0.0	0.0	2.0
356	426860.96	5409699.37	379.78	0	DEN	1000	65.6	20.1	0.0	0.0	0.0	80.0	10.3	-2.1	0.0	0.0	0.0	0.0	0.0	-2.4
356	426860.96	5409699.37	379.78	0	DEN	2000	64.3	20.1	0.0	0.0	0.0	80.0	27.2	-2.1	0.0	0.0	0.0	0.0	0.0	-20.6
356	426860.96	5409699.37	379.78	0	DEN	4000	60.4	20.1	0.0	0.0	0.0	80.0	92.1	-2.1	0.0	0.0	0.0	0.0	0.0	-89.4
356	426860.96	5409699.37	379.78	0	DEN	8000	55.1	20.1	0.0	0.0	0.0	80.0	328.4	-2.1	0.0	0.0	0.0	0.0	0.0	-331.0
384	426954.21	5409723.21	387.28	0	DEN	32	29.1	19.6	0.0	0.0	0.0	80.0	0.1	-5.7	0.0	0.0	0.0	0.0	0.0	-25.6
384	426954.21	5409723.21	387.28	0	DEN	63	46.6	19.6	0.0	0.0	0.0	80.0	0.3	-5.7	0.0	0.0	0.0	0.0	0.0	-8.4
384	426954.21	5409723.21	387.28	0	DEN	125	58.3	19.6	0.0	0.0	0.0	80.0	1.2	1.8	0.0	0.0	0.0	0.0	0.0	-5.0
384	426954.21	5409723.21	387.28	0	DEN	250	60.9	19.6	0.0	0.0	0.0	80.0	2.9	-0.7	0.0	0.0	0.0	0.0	0.0	-1.7
384	426954.21	5409723.21	387.28	0	DEN	500	65.1	19.6	0.0	0.0	0.0	80.0	5.4	-2.1	0.0	0.0	0.0	0.0	0.0	1.4
384	426954.21	5409723.21	387.28	0	DEN	1000	65.6	19.6	0.0	0.0	0.0	80.0	10.3	-2.1	0.0	0.0	0.0	0.0	0.0	-3.0
384	426954.21	5409723.21	387.28	0	DEN	2000	64.3	19.6	0.0	0.0	0.0	80.0	27.2	-2.1	0.0	0.0	0.0	0.0	0.0	-21.2
384	426954.21	5409723.21	387.28	0	DEN	4000	60.4	19.6	0.0	0.0	0.0	80.0	92.3	-2.1	0.0	0.0	0.0	0.0	0.0	-90.1
384	426954.21	5409723.21	387.28	0	DEN	8000	55.1	19.6	0.0	0.0	0.0	80.0	329.1	-2.1	0.0	0.0	0.0	0.0	0.0	-332.2
396	426184.20	5409402.91	351.81	0	DEN	32	29.1	19.1	0.0	0.0	0.0	79.8	0.1	-5.7	0.0	0.0	4.8	0.0	0.0	-30.8
396	426184.20	5409402.91	351.81	0	DEN	63	46.6	19.1	0.0	0.0	0.0	79.8	0.3	-5.7	0.0	0.0	4.8	0.0	0.0	-13.5
396	426184.20	5409402.91	351.81	0	DEN	125	58.3	19.1	0.0	0.0	0.0	79.8	1.1	2.1	0.0	0.0	2.7	0.0	0.0	-8.4
396	426184.20	5409402.91	351.81	0	DEN	250	60.9	19.1	0.0	0.0	0.0	79.8	2.9	-0.3	0.0	0.0	4.9	0.0	0.0	-7.3
396	426184.20	5409402.91	351.81	0	DEN	500	65.1	19.1	0.0	0.0	0.0	79.8	5.3	-1.7	0.0	0.0	5.0	0.0	0.0	-4.2
396	426184.20	5409402.91	351.81	0	DEN	1000	65.6	19.1	0.0	0.0	0.0	79.8	10.1	-1.7	0.0	0.0	5.1	0.0	0.0	-8.7
396	426184.20	5409402.91	351.81	0	DEN	2000	64.3	19.1	0.0	0.0	0.0	79.8	26.7	-1.7	0.0	0.0	5.5	0.0	0.0	-26.9
396	426184.20	5409402.91	351.81	0	DEN	4000	60.4	19.1	0.0	0.0	0.0	79.8	90.4	-1.7	0.0	0.0	6.1	0.0	0.0	-95.1
396	426184.20	5409402.91	351.81	0	DEN	8000	55.1	19.1	0.0	0.0	0.0	79.8	322.4	-1.7	0.0	0.0	7.1	0.0	0.0	-333.4
399	427510.78	5409882.57	381.12	0	DEN	32	29.1	19.4	0.0	0.0	0.0	80.3	0.1	-5.7	0.0	0.0	4.8	0.0	0.0	-31.0
399	427510.78	5409882.57	381.12	0	DEN	63	46.6	19.4	0.0	0.0	0.0	80.3	0.4	-5.7	0.0	0.0	4.8	0.0	0.0	-13.8
399	427510.78	5409882.57	381.12	0	DEN	125	58.3	19.4	0.0	0.0	0.0	80.3	1.2	1.2	0.0	0.0	3.5	0.0	0.0	-8.6
399	427510.78	5409882.57	381.12	0	DEN	250	60.9	19.4	0.0	0.0	0.0	80.3	3.1	-1.2	0.0	0.0	4.8	0.0	0.0	-6.7

Line Source, ISO 9613, Name: "MGR_PAG", ID: ""																				
Nr.	X	Y	Z	Refl.	DEN	Freq.	Lw	l/a	Optime	K0	Dc	Adiv	Aatm	Agr	Afol	Ahous	Abar	Cmet	RL	Lr
	(m)	(m)	(m)			(Hz)	dB(A)	dB	dB	(dB)	(dB)	(dB)	(dB)	(dB)	(dB)	(dB)	(dB)	(dB)	(dB)	dB(A)
399	427510.78	5409882.57	381.12	0	DEN	500	65.1	19.4	0.0	0.0	0.0	80.3	5.7	-2.6	0.0	0.0	4.8	0.0	0.0	-3.7
399	427510.78	5409882.57	381.12	0	DEN	1000	65.6	19.4	0.0	0.0	0.0	80.3	10.7	-2.6	0.0	0.0	4.8	0.0	0.0	-8.3
399	427510.78	5409882.57	381.12	0	DEN	2000	64.3	19.4	0.0	0.0	0.0	80.3	28.3	-2.6	0.0	0.0	4.8	0.0	0.0	-27.2
399	427510.78	5409882.57	381.12	0	DEN	4000	60.4	19.4	0.0	0.0	0.0	80.3	96.1	-2.6	0.0	0.0	4.8	0.0	0.0	-98.8
399	427510.78	5409882.57	381.12	0	DEN	8000	55.1	19.4	0.0	0.0	0.0	80.3	342.6	-2.6	0.0	0.0	4.8	0.0	0.0	-350.7
435	426315.73	5409599.88	366.27	0	DEN	32	29.1	17.3	0.0	0.0	0.0	80.2	0.1	-5.7	0.0	0.0	4.8	0.0	0.0	-32.9
435	426315.73	5409599.88	366.27	0	DEN	63	46.6	17.3	0.0	0.0	0.0	80.2	0.4	-5.7	0.0	0.0	4.8	0.0	0.0	-15.7
435	426315.73	5409599.88	366.27	0	DEN	125	58.3	17.3	0.0	0.0	0.0	80.2	1.2	5.0	0.0	0.0	0.0	0.0	0.0	-10.8
435	426315.73	5409599.88	366.27	0	DEN	250	60.9	17.3	0.0	0.0	0.0	80.2	3.0	1.5	0.0	0.0	3.2	0.0	0.0	-9.8
435	426315.73	5409599.88	366.27	0	DEN	500	65.1	17.3	0.0	0.0	0.0	80.2	5.6	-0.9	0.0	0.0	4.8	0.0	0.0	-7.2
435	426315.73	5409599.88	366.27	0	DEN	1000	65.6	17.3	0.0	0.0	0.0	80.2	10.5	-0.9	0.0	0.0	4.8	0.0	0.0	-11.7
435	426315.73	5409599.88	366.27	0	DEN	2000	64.3	17.3	0.0	0.0	0.0	80.2	27.8	-0.9	0.0	0.0	4.8	0.0	0.0	-30.3
435	426315.73	5409599.88	366.27	0	DEN	4000	60.4	17.3	0.0	0.0	0.0	80.2	94.4	-0.9	0.0	0.0	4.8	0.0	0.0	-100.7
435	426315.73	5409599.88	366.27	0	DEN	8000	55.1	17.3	0.0	0.0	0.0	80.2	336.7	-0.9	0.0	0.0	4.8	0.0	0.0	-348.3
474	427423.21	5409839.69	384.84	0	DEN	32	29.1	16.2	0.0	0.0	0.0	80.2	0.1	-5.7	0.0	0.0	4.8	0.0	0.0	-34.1
474	427423.21	5409839.69	384.84	0	DEN	63	46.6	16.2	0.0	0.0	0.0	80.2	0.4	-5.7	0.0	0.0	4.8	0.0	0.0	-16.8
474	427423.21	5409839.69	384.84	0	DEN	125	58.3	16.2	0.0	0.0	0.0	80.2	1.2	1.2	0.0	0.0	3.5	0.0	0.0	-11.7
474	427423.21	5409839.69	384.84	0	DEN	250	60.9	16.2	0.0	0.0	0.0	80.2	3.0	-1.2	0.0	0.0	4.8	0.0	0.0	-9.7
474	427423.21	5409839.69	384.84	0	DEN	500	65.1	16.2	0.0	0.0	0.0	80.2	5.6	-2.6	0.0	0.0	4.8	0.0	0.0	-6.7
474	427423.21	5409839.69	384.84	0	DEN	1000	65.6	16.2	0.0	0.0	0.0	80.2	10.6	-2.6	0.0	0.0	4.8	0.0	0.0	-11.2
474	427423.21	5409839.69	384.84	0	DEN	2000	64.3	16.2	0.0	0.0	0.0	80.2	27.9	-2.6	0.0	0.0	4.8	0.0	0.0	-29.8
474	427423.21	5409839.69	384.84	0	DEN	4000	60.4	16.2	0.0	0.0	0.0	80.2	94.6	-2.6	0.0	0.0	4.8	0.0	0.0	-100.4
474	427423.21	5409839.69	384.84	0	DEN	8000	55.1	16.2	0.0	0.0	0.0	80.2	337.5	-2.6	0.0	0.0	4.8	0.0	0.0	-348.7
492	427455.08	5409860.32	382.99	0	DEN	32	29.1	15.4	0.0	0.0	0.0	80.3	0.1	-5.7	0.0	0.0	4.8	0.0	0.0	-34.9
492	427455.08	5409860.32	382.99	0	DEN	63	46.6	15.4	0.0	0.0	0.0	80.3	0.4	-5.7	0.0	0.0	4.8	0.0	0.0	-17.7
492	427455.08	5409860.32	382.99	0	DEN	125	58.3	15.4	0.0	0.0	0.0	80.3	1.2	1.2	0.0	0.0	3.5	0.0	0.0	-12.6
492	427455.08	5409860.32	382.99	0	DEN	250	60.9	15.4	0.0	0.0	0.0	80.3	3.0	-1.2	0.0	0.0	4.8	0.0	0.0	-10.6
492	427455.08	5409860.32	382.99	0	DEN	500	65.1	15.4	0.0	0.0	0.0	80.3	5.6	-2.6	0.0	0.0	4.8	0.0	0.0	-7.6
492	427455.08	5409860.32	382.99	0	DEN	1000	65.6	15.4	0.0	0.0	0.0	80.3	10.6	-2.6	0.0	0.0	4.8	0.0	0.0	-12.1
492	427455.08	5409860.32	382.99	0	DEN	2000	64.3	15.4	0.0	0.0	0.0	80.3	28.1	-2.6	0.0	0.0	4.8	0.0	0.0	-30.9
492	427455.08	5409860.32	382.99	0	DEN	4000	60.4	15.4	0.0	0.0	0.0	80.3	95.3	-2.6	0.0	0.0	4.8	0.0	0.0	-102.0
492	427455.08	5409860.32	382.99	0	DEN	8000	55.1	15.4	0.0	0.0	0.0	80.3	339.9	-2.6	0.0	0.0	4.8	0.0	0.0	-351.9

Line Source, ISO 9613, Name: "TRL_OP-OB", ID: ""																				
Nr.	X	Y	Z	Refl.	DEN	Freq.	Lw	l/a	Optime	K0	Dc	Adiv	Aatm	Agr	Afol	Ahous	Abar	Cmet	RL	Lr
	(m)	(m)	(m)			(Hz)	dB(A)	dB	dB	(dB)	(dB)	(dB)	(dB)	(dB)	(dB)	(dB)	(dB)	(dB)	(dB)	dB(A)
150	424882.86	5409587.72	350.54	0	DEN	32	35.7	26.3	0.0	0.0	0.0	82.3	0.1	-5.8	0.0	0.0	4.8	0.0	0.0	-19.4
150	424882.86	5409587.72	350.54	0	DEN	63	58.1	26.3	0.0	0.0	0.0	82.3	0.4	-5.8	0.0	0.0	4.8	0.0	0.0	2.7
150	424882.86	5409587.72	350.54	0	DEN	125	71.4	26.3	0.0	0.0	0.0	82.3	1.5	2.2	0.0	0.0	2.6	0.0	0.0	9.1
150	424882.86	5409587.72	350.54	0	DEN	250	65.6	26.3	0.0	0.0	0.0	82.3	3.8	-0.3	0.0	0.0	4.8	0.0	0.0	1.3
150	424882.86	5409587.72	350.54	0	DEN	500	65.5	26.3	0.0	0.0	0.0	82.3	7.1	-1.7	0.0	0.0	4.8	0.0	0.0	-0.7
150	424882.86	5409587.72	350.54	0	DEN	1000	62.6	26.3	0.0	0.0	0.0	82.3	13.5	-1.7	0.0	0.0	4.8	0.0	0.0	-10.0
150	424882.86	5409587.72	350.54	0	DEN	2000	58.9	26.3	0.0	0.0	0.0	82.3	35.6	-1.7	0.0	0.0	4.8	0.0	0.0	-35.8
150	424882.86	5409587.72	350.54	0	DEN	4000	54.5	26.3	0.0	0.0	0.0	82.3	120.6	-1.7	0.0	0.0	4.8	0.0	0.0	-125.2
150	424882.86	5409587.72	350.54	0	DEN	8000	48.7	26.3	0.0	0.0	0.0	82.3	430.0	-1.7	0.0	0.0	4.8	0.0	0.0	-440.5
158	425584.45	5409336.16	338.66	0	DEN	32	35.7	24.7	0.0	0.0	0.0	80.6	0.1	-5.7	0.0	0.0	4.8	0.0	0.0	-19.4
158	425584.45	5409336.16	338.66	0	DEN	63	58.1	24.7	0.0	0.0	0.0	80.6	0.4	-5.7	0.0	0.0	4.8	0.0	0.0	2.8
158	425584.45	5409336.16	338.66	0	DEN	125	71.4	24.7	0.0	0.0	0.0	80.6	1.2	2.3	0.0	0.0	2.5	0.0	0.0	9.4
158	425584.45	5409336.16	338.66	0	DEN	250	65.6	24.7	0.0	0.0	0.0	80.6	3.2	-0.2	0.0	0.0	4.8	0.0	0.0	1.9
158	425584.45	5409336.16	338.66	0	DEN	500	65.5	24.7	0.0	0.0	0.0	80.6	5.8	-1.6	0.0	0.0	4.8	0.0	0.0	0.5
158	425584.45	5409336.16	338.66	0	DEN	1000	62.6	24.7	0.0	0.0	0.0	80.6	11.1	-1.6	0.0	0.0	4.8	0.0	0.0	-7.6
158	425584.45	5409336.16	338.66	0	DEN	2000	58.9	24.7	0.0	0.0	0.0	80.6	29.3	-1.6	0.0	0.0	4.8	0.0	0.0	-29.5
158	425584.45	5409336.16	338.66	0	DEN	4000	54.5	24.7	0.0	0.0	0.0	80.6	99.2	-1.6	0.0	0.0	4.8	0.0	0.0	-103.9
158	425584.45	5409336.16	338.66	0	DEN	8000	48.7	24.7	0.0	0.0	0.0	80.6	353.8	-1.6	0.0	0.0	4.8	0.0	0.0	-364.3
160	424344.42	5410176.96	360.56	0	DEN	32	35.7	27.6	0.0	0.0	0.0	84.0	0.1	-5.8	0.0	0.0	0.0	0.0	0.0	-15.0
160	424344.42	5410176.96	360.56	0	DEN	63	58.1	27.6	0.0	0.0	0.0	84.0	0.5	-5.8	0.0	0.0	0.0	0.0	0.0	7.0
160	424344.42	5410176.96	360.56	0	DEN	125	71.4	27.6	0.0	0.0	0.0	84.0	1.8	1.7	0.0	0.0	0.0	0.0	0.0	11.5
160	424344.42	5410176.96	360.56	0	DEN	250	65.6	27.6	0.0	0.0	0.0	84.0	4.7	-0.8	0.0	0.0	0.0	0.0	0.0	5.3
160	424344.42	5410176.96	360.56	0	DEN	500	65.5	27.6	0.0	0.0	0.0	84.0	8.6	-2.2	0.0	0.0	0.0	0.0	0.0	2.6
160	424344.42	5410176.96	360.56	0	DEN	1000	62.6	27.6	0.0	0.0	0.0	84.0	16.4	-2.2	0.0	0.0	0.0	0.0	0.0	-8.0
160	424344.42	5410176.96	360.56	0	DEN	2000	58.9	27.6	0.0	0.0	0.0	84.0	43.3	-2.2	0.0	0.0	0.0	0.0	0.0	-38.6
160	424344.42	5410176.96	360.56	0	DEN	4000	54.5	27.6	0.0	0.0	0.0	84.0	146.7	-2.2	0.0	0.0	0.0	0.0	0.0	-146.5
160	424344.42	5410176.96	360.56	0	DEN	8000	48.7	27.6	0.0	0.0	0.0	84.0	523.3	-2.2	0.0	0.0	0.0	0.0	0.0	-528.8

Line Source, ISO 9613, Name: "TRL_OP-OB", ID: ""																					
Nr.	X	Y	Z	Refl.	DEN	Freq.	Lw	l/a	Optime	K0	Dc	Adiv	Aatm	Agr	Afol	Ahous	Abar	Cmet	RL	Lr
	(m)	(m)	(m)			(Hz)	dB(A)	dB	dB	(dB)	(dB)	(dB)	(dB)	(dB)	(dB)	(dB)	(dB)	(dB)	(dB)	dB(A)
169	425299.74	5409343.89	349.02	0	DEN	32	35.7	24.5	0.0	0.0	0.0	81.1	0.1	-5.8	0.0	0.0	4.8	0.0	0.0	-20.1
169	425299.74	5409343.89	349.02	0	DEN	63	58.1	24.5	0.0	0.0	0.0	81.1	0.4	-5.8	0.0	0.0	4.8	0.0	0.0	2.0
169	425299.74	5409343.89	349.02	0	DEN	125	71.4	24.5	0.0	0.0	0.0	81.1	1.3	4.7	0.0	0.0	0.1	0.0	0.0	8.6
169	425299.74	5409343.89	349.02	0	DEN	250	65.6	24.5	0.0	0.0	0.0	81.1	3.4	1.4	0.0	0.0	3.4	0.0	0.0	0.7
169	425299.74	5409343.89	349.02	0	DEN	500	65.5	24.5	0.0	0.0	0.0	81.1	6.2	-0.9	0.0	0.0	4.8	0.0	0.0	-1.3
169	425299.74	5409343.89	349.02	0	DEN	1000	62.6	24.5	0.0	0.0	0.0	81.1	11.8	-0.9	0.0	0.0	4.8	0.0	0.0	-9.8
169	425299.74	5409343.89	349.02	0	DEN	2000	58.9	24.5	0.0	0.0	0.0	81.1	31.1	-0.9	0.0	0.0	4.8	0.0	0.0	-32.8
169	425299.74	5409343.89	349.02	0	DEN	4000	54.5	24.5	0.0	0.0	0.0	81.1	105.4	-0.9	0.0	0.0	4.8	0.0	0.0	-111.5
169	425299.74	5409343.89	349.02	0	DEN	8000	48.7	24.5	0.0	0.0	0.0	81.1	375.9	-0.9	0.0	0.0	4.8	0.0	0.0	-387.9
175	425705.23	5409422.07	317.83	0	DEN	32	35.7	23.6	0.0	0.0	0.0	80.6	0.1	-5.7	0.0	0.0	4.8	0.0	0.0	-20.5
175	425705.23	5409422.07	317.83	0	DEN	63	58.1	23.6	0.0	0.0	0.0	80.6	0.4	-5.7	0.0	0.0	4.8	0.0	0.0	1.6
175	425705.23	5409422.07	317.83	0	DEN	125	71.4	23.6	0.0	0.0	0.0	80.6	1.2	2.2	0.0	0.0	2.6	0.0	0.0	8.3
175	425705.23	5409422.07	317.83	0	DEN	250	65.6	23.6	0.0	0.0	0.0	80.6	3.2	-0.3	0.0	0.0	4.9	0.0	0.0	0.8
175	425705.23	5409422.07	317.83	0	DEN	500	65.5	23.6	0.0	0.0	0.0	80.6	5.8	-1.6	0.0	0.0	4.9	0.0	0.0	-0.7
175	425705.23	5409422.07	317.83	0	DEN	1000	62.6	23.6	0.0	0.0	0.0	80.6	11.1	-1.6	0.0	0.0	5.1	0.0	0.0	-9.0
175	425705.23	5409422.07	317.83	0	DEN	2000	58.9	23.6	0.0	0.0	0.0	80.6	29.2	-1.6	0.0	0.0	5.4	0.0	0.0	-31.1
175	425705.23	5409422.07	317.83	0	DEN	4000	54.5	23.6	0.0	0.0	0.0	80.6	99.1	-1.6	0.0	0.0	5.9	0.0	0.0	-105.9
175	425705.23	5409422.07	317.83	0	DEN	8000	48.7	23.6	0.0	0.0	0.0	80.6	353.5	-1.6	0.0	0.0	6.8	0.0	0.0	-367.0
194	425499.98	5409457.87	299.87	0	DEN	32	35.7	22.8	0.0	0.0	0.0	81.0	0.1	-5.8	0.0	0.0	5.2	0.0	0.0	-22.1
194	425499.98	5409457.87	299.87	0	DEN	63	58.1	22.8	0.0	0.0	0.0	81.0	0.4	-5.8	0.0	0.0	5.5	0.0	0.0	-0.3
194	425499.98	5409457.87	299.87	0	DEN	125	71.4	22.8	0.0	0.0	0.0	81.0	1.3	2.2	0.0	0.0	4.0	0.0	0.0	5.7
194	425499.98	5409457.87	299.87	0	DEN	250	65.6	22.8	0.0	0.0	0.0	81.0	3.3	-0.3	0.0	0.0	7.2	0.0	0.0	-2.9
194	425499.98	5409457.87	299.87	0	DEN	500	65.5	22.8	0.0	0.0	0.0	81.0	6.1	-1.7	0.0	0.0	8.8	0.0	0.0	-6.0
194	425499.98	5409457.87	299.87	0	DEN	1000	62.6	22.8	0.0	0.0	0.0	81.0	11.6	-1.7	0.0	0.0	10.8	0.0	0.0	-16.4
194	425499.98	5409457.87	299.87	0	DEN	2000	58.9	22.8	0.0	0.0	0.0	81.0	30.7	-1.7	0.0	0.0	13.3	0.0	0.0	-41.6
194	425499.98	5409457.87	299.87	0	DEN	4000	54.5	22.8	0.0	0.0	0.0	81.0	104.1	-1.7	0.0	0.0	16.0	0.0	0.0	-122.1
194	425499.98	5409457.87	299.87	0	DEN	8000	48.7	22.8	0.0	0.0	0.0	81.0	371.2	-1.7	0.0	0.0	18.8	0.0	0.0	-397.9
195	424642.58	5409858.65	354.60	0	DEN	32	35.7	24.8	0.0	0.0	0.0	83.1	0.1	-5.8	0.0	0.0	4.8	0.0	0.0	-21.8
195	424642.58	5409858.65	354.60	0	DEN	63	58.1	24.8	0.0	0.0	0.0	83.1	0.5	-5.8	0.0	0.0	4.8	0.0	0.0	0.2
195	424642.58	5409858.65	354.60	0	DEN	125	71.4	24.8	0.0	0.0	0.0	83.1	1.7	2.0	0.0	0.0	2.7	0.0	0.0	6.6
195	424642.58	5409858.65	354.60	0	DEN	250	65.6	24.8	0.0	0.0	0.0	83.1	4.2	-0.5	0.0	0.0	4.8	0.0	0.0	-1.3
195	424642.58	5409858.65	354.60	0	DEN	500	65.5	24.8	0.0	0.0	0.0	83.1	7.8	-1.9	0.0	0.0	4.8	0.0	0.0	-3.6
195	424642.58	5409858.65	354.60	0	DEN	1000	62.6	24.8	0.0	0.0	0.0	83.1	14.8	-1.9	0.0	0.0	4.8	0.0	0.0	-13.5
195	424642.58	5409858.65	354.60	0	DEN	2000	58.9	24.8	0.0	0.0	0.0	83.1	39.1	-1.9	0.0	0.0	4.8	0.0	0.0	-41.4
195	424642.58	5409858.65	354.60	0	DEN	4000	54.5	24.8	0.0	0.0	0.0	83.1	132.4	-1.9	0.0	0.0	4.8	0.0	0.0	-139.2
195	424642.58	5409858.65	354.60	0	DEN	8000	48.7	24.8	0.0	0.0	0.0	83.1	472.3	-1.9	0.0	0.0	4.8	0.0	0.0	-484.9
235	425100.99	5409404.00	349.02	0	DEN	32	35.7	21.5	0.0	0.0	0.0	81.6	0.1	-5.8	0.0	0.0	4.8	0.0	0.0	-23.5
235	425100.99	5409404.00	349.02	0	DEN	63	58.1	21.5	0.0	0.0	0.0	81.6	0.4	-5.8	0.0	0.0	4.8	0.0	0.0	-1.4
235	425100.99	5409404.00	349.02	0	DEN	125	71.4	21.5	0.0	0.0	0.0	81.6	1.4	3.0	0.0	0.0	1.8	0.0	0.0	5.1
235	425100.99	5409404.00	349.02	0	DEN	250	65.6	21.5	0.0	0.0	0.0	81.6	3.5	0.3	0.0	0.0	4.4	0.0	0.0	-2.8
235	425100.99	5409404.00	349.02	0	DEN	500	65.5	21.5	0.0	0.0	0.0	81.6	6.5	-1.3	0.0	0.0	4.8	0.0	0.0	-4.6
235	425100.99	5409404.00	349.02	0	DEN	1000	62.6	21.5	0.0	0.0	0.0	81.6	12.4	-1.3	0.0	0.0	4.8	0.0	0.0	-13.4
235	425100.99	5409404.00	349.02	0	DEN	2000	58.9	21.5	0.0	0.0	0.0	81.6	32.8	-1.3	0.0	0.0	4.8	0.0	0.0	-37.5
235	425100.99	5409404.00	349.02	0	DEN	4000	54.5	21.5	0.0	0.0	0.0	81.6	111.3	-1.3	0.0	0.0	4.8	0.0	0.0	-120.3
235	425100.99	5409404.00	349.02	0	DEN	8000	48.7	21.5	0.0	0.0	0.0	81.6	396.9	-1.3	0.0	0.0	4.8	0.0	0.0	-411.8
262	425776.63	5409373.74	328.24	0	DEN	32	35.7	20.0	0.0	0.0	0.0	80.4	0.1	-5.7	0.0	0.0	4.8	0.0	0.0	-23.8
262	425776.63	5409373.74	328.24	0	DEN	63	58.1	20.0	0.0	0.0	0.0	80.4	0.4	-5.7	0.0	0.0	4.8	0.0	0.0	-1.7
262	425776.63	5409373.74	328.24	0	DEN	125	71.4	20.0	0.0	0.0	0.0	80.4	1.2	2.3	0.0	0.0	2.5	0.0	0.0	5.0
262	425776.63	5409373.74	328.24	0	DEN	250	65.6	20.0	0.0	0.0	0.0	80.4	3.1	-0.2	0.0	0.0	4.8	0.0	0.0	-2.5
262	425776.63	5409373.74	328.24	0	DEN	500	65.5	20.0	0.0	0.0	0.0	80.4	5.7	-1.6	0.0	0.0	4.9	0.0	0.0	-3.9
262	425776.63	5409373.74	328.24	0	DEN	1000	62.6	20.0	0.0	0.0	0.0	80.4	10.8	-1.6	0.0	0.0	5.1	0.0	0.0	-12.0
262	425776.63	5409373.74	328.24	0	DEN	2000	58.9	20.0	0.0	0.0	0.0	80.4	28.4	-1.6	0.0	0.0	5.3	0.0	0.0	-33.7
262	425776.63	5409373.74	328.24	0	DEN	4000	54.5	20.0	0.0	0.0	0.0	80.4	96.5	-1.6	0.0	0.0	5.8	0.0	0.0	-106.6
262	425776.63	5409373.74	328.24	0	DEN	8000	48.7	20.0	0.0	0.0	0.0	80.4	344.1	-1.6	0.0	0.0	6.7	0.0	0.0	-360.9
304	424083.09	5410477.06	364.00	0	DEN	32	35.7	23.6	0.0	0.0	0.0	84.8	0.2	-5.8	0.0	0.0	0.0	0.0	0.0	-19.8
304	424083.09	5410477.06	364.00	0	DEN	63	58.1	23.6	0.0	0.0	0.0	84.8	0.6	-5.8	0.0	0.0	0.0	0.0	0.0	2.2
304	424083.09	5410477.06	364.00	0	DEN	125	71.4	23.6	0.0	0.0	0.0	84.8	2.0	1.4	0.0	0.0	0.0	0.0	0.0	6.8
304	424083.09	5410477.06	364.00	0	DEN	250	65.6	23.6	0.0	0.0	0.0	84.8	5.1	-1.0	0.0	0.0	0.0	0.0	0.0	0.4
304	424083.09	5410477.06	364.00	0	DEN	500	65.5	23.6	0.0	0.0	0.0	84.8	9.4	-2.4	0.0	0.0	0.0	0.0	0.0	-2.7
304	424083.09	5410477.06	364.00	0	DEN	1000	62.6	23.6	0.0	0.0	0.0	84.8	17.8	-2.4	0.0	0.0	0.0	0.0	0.0	-14.0
304	424083.09	5410477.06	364.00	0	DEN	2000	58.9	23.6	0.0	0.0	0.0	84.8	47.1	-2.4	0.0	0.0	0.0	0.0	0.0	-47.0
304	424083.09	5410477.06	364.00	0	DEN	4000	54.5	23.6	0.0	0.0	0.0	84.8	159.7	-2.4	0.0	0.0	0.0	0.0	0.0	-164.0
304	424083.09	5410477.06	364.00	0	DEN	8000	48.7	23.6	0.0	0.0	0.0	84.8	569.8	-2.4	0.0	0.0	0.0	0.0	0.0	-579.8

Line Source, ISO 9613, Name: "TRL_OP-OB", ID: ""																					
Nr.	X	Y	Z	Refl.	DEN	Freq.	Lw	l/a	Optime	K0	Dc	Adiv	Aatm	Agr	Afol	Ahous	Abar	Cmet	RL	Lr
	(m)	(m)	(m)			(Hz)	dB(A)	dB	dB	(dB)	(dB)	(dB)	(dB)	(dB)	(dB)	(dB)	(dB)	(dB)	(dB)	dB(A)
405	424247.40	5410755.82	364.00	0	DEN	32	35.7	20.9	0.0	0.0	0.0	84.9	0.2	-5.8	0.0	0.0	0.0	0.0	0.0	-22.7
405	424247.40	5410755.82	364.00	0	DEN	63	58.1	20.9	0.0	0.0	0.0	84.9	0.6	-5.8	0.0	0.0	0.0	0.0	0.0	-0.7
405	424247.40	5410755.82	364.00	0	DEN	125	71.4	20.9	0.0	0.0	0.0	84.9	2.0	1.2	0.0	0.0	0.0	0.0	0.0	4.1
405	424247.40	5410755.82	364.00	0	DEN	250	65.6	20.9	0.0	0.0	0.0	84.9	5.2	-1.2	0.0	0.0	0.0	0.0	0.0	-2.4
405	424247.40	5410755.82	364.00	0	DEN	500	65.5	20.9	0.0	0.0	0.0	84.9	9.6	-2.6	0.0	0.0	0.0	0.0	0.0	-5.5
405	424247.40	5410755.82	364.00	0	DEN	1000	62.6	20.9	0.0	0.0	0.0	84.9	18.2	-2.6	0.0	0.0	0.0	0.0	0.0	-17.0
405	424247.40	5410755.82	364.00	0	DEN	2000	58.9	20.9	0.0	0.0	0.0	84.9	48.1	-2.6	0.0	0.0	0.0	0.0	0.0	-50.6
405	424247.40	5410755.82	364.00	0	DEN	4000	54.5	20.9	0.0	0.0	0.0	84.9	162.9	-2.6	0.0	0.0	0.0	0.0	0.0	-169.9
405	424247.40	5410755.82	364.00	0	DEN	8000	48.7	20.9	0.0	0.0	0.0	84.9	581.2	-2.6	0.0	0.0	0.0	0.0	0.0	-593.9
407	424153.08	5410680.04	364.00	0	DEN	32	35.7	20.9	0.0	0.0	0.0	84.9	0.2	-5.8	0.0	0.0	0.0	0.0	0.0	-22.7
407	424153.08	5410680.04	364.00	0	DEN	63	58.1	20.9	0.0	0.0	0.0	84.9	0.6	-5.8	0.0	0.0	0.0	0.0	0.0	-0.8
407	424153.08	5410680.04	364.00	0	DEN	125	71.4	20.9	0.0	0.0	0.0	84.9	2.0	1.3	0.0	0.0	0.0	0.0	0.0	3.9
407	424153.08	5410680.04	364.00	0	DEN	250	65.6	20.9	0.0	0.0	0.0	84.9	5.2	-1.2	0.0	0.0	0.0	0.0	0.0	-2.6
407	424153.08	5410680.04	364.00	0	DEN	500	65.5	20.9	0.0	0.0	0.0	84.9	9.6	-2.5	0.0	0.0	0.0	0.0	0.0	-5.7
407	424153.08	5410680.04	364.00	0	DEN	1000	62.6	20.9	0.0	0.0	0.0	84.9	18.2	-2.5	0.0	0.0	0.0	0.0	0.0	-17.2
407	424153.08	5410680.04	364.00	0	DEN	2000	58.9	20.9	0.0	0.0	0.0	84.9	48.1	-2.5	0.0	0.0	0.0	0.0	0.0	-50.8
407	424153.08	5410680.04	364.00	0	DEN	4000	54.5	20.9	0.0	0.0	0.0	84.9	163.1	-2.5	0.0	0.0	0.0	0.0	0.0	-170.2
407	424153.08	5410680.04	364.00	0	DEN	8000	48.7	20.9	0.0	0.0	0.0	84.9	581.7	-2.5	0.0	0.0	0.0	0.0	0.0	-594.6
411	424354.98	5410780.20	364.00	0	DEN	32	35.7	20.3	0.0	0.0	0.0	84.8	0.2	-5.8	0.0	0.0	0.0	0.0	0.0	-23.2
411	424354.98	5410780.20	364.00	0	DEN	63	58.1	20.3	0.0	0.0	0.0	84.8	0.6	-5.8	0.0	0.0	0.0	0.0	0.0	-1.2
411	424354.98	5410780.20	364.00	0	DEN	125	71.4	20.3	0.0	0.0	0.0	84.8	2.0	1.2	0.0	0.0	0.0	0.0	0.0	3.6
411	424354.98	5410780.20	364.00	0	DEN	250	65.6	20.3	0.0	0.0	0.0	84.8	5.1	-1.3	0.0	0.0	0.0	0.0	0.0	-2.8
411	424354.98	5410780.20	364.00	0	DEN	500	65.5	20.3	0.0	0.0	0.0	84.8	9.5	-2.7	0.0	0.0	0.0	0.0	0.0	-5.9
411	424354.98	5410780.20	364.00	0	DEN	1000	62.6	20.3	0.0	0.0	0.0	84.8	18.0	-2.7	0.0	0.0	0.0	0.0	0.0	-17.3
411	424354.98	5410780.20	364.00	0	DEN	2000	58.9	20.3	0.0	0.0	0.0	84.8	47.6	-2.7	0.0	0.0	0.0	0.0	0.0	-50.6
411	424354.98	5410780.20	364.00	0	DEN	4000	54.5	20.3	0.0	0.0	0.0	84.8	161.3	-2.7	0.0	0.0	0.0	0.0	0.0	-168.7
411	424354.98	5410780.20	364.00	0	DEN	8000	48.7	20.3	0.0	0.0	0.0	84.8	575.4	-2.7	0.0	0.0	0.0	0.0	0.0	-588.6
489	424087.26	5410622.11	364.00	0	DEN	32	35.7	17.5	0.0	0.0	0.0	84.9	0.2	-5.8	0.0	0.0	0.0	0.0	0.0	-26.1
489	424087.26	5410622.11	364.00	0	DEN	63	58.1	17.5	0.0	0.0	0.0	84.9	0.6	-5.8	0.0	0.0	0.0	0.0	0.0	-4.1
489	424087.26	5410622.11	364.00	0	DEN	125	71.4	17.5	0.0	0.0	0.0	84.9	2.0	1.4	0.0	0.0	0.0	0.0	0.0	0.6
489	424087.26	5410622.11	364.00	0	DEN	250	65.6	17.5	0.0	0.0	0.0	84.9	5.2	-1.1	0.0	0.0	0.0	0.0	0.0	-5.9
489	424087.26	5410622.11	364.00	0	DEN	500	65.5	17.5	0.0	0.0	0.0	84.9	9.6	-2.5	0.0	0.0	0.0	0.0	0.0	-9.0
489	424087.26	5410622.11	364.00	0	DEN	1000	62.6	17.5	0.0	0.0	0.0	84.9	18.2	-2.5	0.0	0.0	0.0	0.0	0.0	-20.6
489	424087.26	5410622.11	364.00	0	DEN	2000	58.9	17.5	0.0	0.0	0.0	84.9	48.1	-2.5	0.0	0.0	0.0	0.0	0.0	-54.1
489	424087.26	5410622.11	364.00	0	DEN	4000	54.5	17.5	0.0	0.0	0.0	84.9	163.1	-2.5	0.0	0.0	0.0	0.0	0.0	-173.6
489	424087.26	5410622.11	364.00	0	DEN	8000	48.7	17.5	0.0	0.0	0.0	84.9	581.8	-2.5	0.0	0.0	0.0	0.0	0.0	-598.1
508	425819.99	5409402.62	327.35	0	DEN	32	35.7	11.4	0.0	0.0	0.0	80.4	0.1	-5.7	0.0	0.0	4.8	0.0	0.0	-32.4
508	425819.99	5409402.62	327.35	0	DEN	63	58.1	11.4	0.0	0.0	0.0	80.4	0.4	-5.7	0.0	0.0	4.8	0.0	0.0	-10.3
508	425819.99	5409402.62	327.35	0	DEN	125	71.4	11.4	0.0	0.0	0.0	80.4	1.2	2.2	0.0	0.0	2.6	0.0	0.0	-3.6
508	425819.99	5409402.62	327.35	0	DEN	250	65.6	11.4	0.0	0.0	0.0	80.4	3.1	-0.2	0.0	0.0	4.8	0.0	0.0	-11.0
508	425819.99	5409402.62	327.35	0	DEN	500	65.5	11.4	0.0	0.0	0.0	80.4	5.7	-1.6	0.0	0.0	4.8	0.0	0.0	-12.3
508	425819.99	5409402.62	327.35	0	DEN	1000	62.6	11.4	0.0	0.0	0.0	80.4	10.8	-1.6	0.0	0.0	4.8	0.0	0.0	-20.3
508	425819.99	5409402.62	327.35	0	DEN	2000	58.9	11.4	0.0	0.0	0.0	80.4	28.4	-1.6	0.0	0.0	4.8	0.0	0.0	-41.7
508	425819.99	5409402.62	327.35	0	DEN	4000	54.5	11.4	0.0	0.0	0.0	80.4	96.5	-1.6	0.0	0.0	4.9	0.0	0.0	-114.2
508	425819.99	5409402.62	327.35	0	DEN	8000	48.7	11.4	0.0	0.0	0.0	80.4	344.0	-1.6	0.0	0.0	5.0	0.0	0.0	-367.7
511	424049.21	5410596.41	364.00	0	DEN	32	35.7	15.6	0.0	0.0	0.0	85.0	0.2	-5.8	0.0	0.0	0.0	0.0	0.0	-28.0
511	424049.21	5410596.41	364.00	0	DEN	63	58.1	15.6	0.0	0.0	0.0	85.0	0.6	-5.8	0.0	0.0	0.0	0.0	0.0	-6.0
511	424049.21	5410596.41	364.00	0	DEN	125	71.4	15.6	0.0	0.0	0.0	85.0	2.0	1.3	0.0	0.0	0.0	0.0	0.0	-1.4
511	424049.21	5410596.41	364.00	0	DEN	250	65.6	15.6	0.0	0.0	0.0	85.0	5.2	-1.1	0.0	0.0	0.0	0.0	0.0	-7.9
511	424049.21	5410596.41	364.00	0	DEN	500	65.5	15.6	0.0	0.0	0.0	85.0	9.6	-2.5	0.0	0.0	0.0	0.0	0.0	-11.0
511	424049.21	5410596.41	364.00	0	DEN	1000	62.6	15.6	0.0	0.0	0.0	85.0	18.2	-2.5	0.0	0.0	0.0	0.0	0.0	-22.5
511	424049.21	5410596.41	364.00	0	DEN	2000	58.9	15.6	0.0	0.0	0.0	85.0	48.2	-2.5	0.0	0.0	0.0	0.0	0.0	-56.1
511	424049.21	5410596.41	364.00	0	DEN	4000	54.5	15.6	0.0	0.0	0.0	85.0	163.3	-2.5	0.0	0.0	0.0	0.0	0.0	-175.7
511	424049.21	5410596.41	364.00	0	DEN	8000	48.7	15.6	0.0	0.0	0.0	85.0	582.6	-2.5	0.0	0.0	0.0	0.0	0.0	-600.8

Point Source, ISO 9613, Name: "WP20", ID: ""																					
Nr.	X	Y	Z	Refl.	DEN	Freq.	Lw	l/a	Optime	K0	Dc	Adiv	Aatm	Agr	Afol	Ahous	Abar	Cmet	RL	Lr
	(m)	(m)	(m)			(Hz)	dB(A)	dB	dB	(dB)	(dB)	(dB)	(dB)	(dB)	(dB)	(dB)	(dB)	(dB)	(dB)	dB(A)
516	415594.37	5407042.99	346.50	0	DEN	32	50.3	0.0	0.0	0.0	0.0	92.5	0.4	-6.0	0.0	0.0	4.8	0.0	0.0	-41.4
516	415594.37	5407042.99	346.50	0	DEN	63	72.3	0.0	0.0	0.0	0.0	92.5	1.4	-6.0	0.0	0.0	4.8	0.0	0.0	-20.4
516	415594.37	5407042.99	346.50	0	DEN	125	82.2	0.0	0.0	0.0	0.0	92.5	4.9	9.2	0.0	0.0	0.0	0.0	0.0	-24.3
516	415594.37	5407042.99	346.50	0	DEN	250	78.5	0.0	0.0	0.0	0.0	92.5	12.4	8.4	0.0	0.0	0.0	0.0	0.0	-34.8
516	415594.37	5407042.99	346.50	0	DEN	500	87.4	0.0	0.0	0.0	0.0	92.5	22.9	5.0	0.0	0.0	0.0	0.0	0.0	-32.9

Point Source, ISO 9613, Name: "WP20", ID: ""																					
Nr.	X	Y	Z	Refl.	DEN	Freq.	Lw	l/a	Optime	K0	Dc	Adiv	Aatm	Agr	Afol	Ahous	Abar	Cmet	RL	Lr
	(m)	(m)	(m)			(Hz)	dB(A)	dB	dB	(dB)	(dB)	(dB)	(dB)	(dB)	(dB)	(dB)	(dB)	(dB)	(dB)	dB(A)
516	415594.37	5407042.99	346.50	0	DEN	1000	92.0	0.0	0.0	0.0	0.0	92.5	43.4	0.7	0.0	0.0	4.1	0.0	0.0	-48.6
516	415594.37	5407042.99	346.50	0	DEN	2000	91.9	0.0	0.0	0.0	0.0	92.5	114.6	0.0	0.0	0.0	4.8	0.0	0.0	-119.9
516	415594.37	5407042.99	346.50	0	DEN	4000	84.5	0.0	0.0	0.0	0.0	92.5	388.5	0.0	0.0	0.0	4.8	0.0	0.0	-401.3
516	415594.37	5407042.99	346.50	0	DEN	8000	78.6	0.0	0.0	0.0	0.0	92.5	385.8	0.0	0.0	0.0	4.8	0.0	0.0	-404.4

Line Source, ISO 9613, Name: "TRE_OP-Mill", ID: ""																					
Nr.	X	Y	Z	Refl.	DEN	Freq.	Lw	l/a	Optime	K0	Dc	Adiv	Aatm	Agr	Afol	Ahous	Abar	Cmet	RL	Lr
	(m)	(m)	(m)			(Hz)	dB(A)	dB	dB	(dB)	(dB)	(dB)	(dB)	(dB)	(dB)	(dB)	(dB)	(dB)	(dB)	dB(A)
351	425903.49	5409397.40	331.88	0	DEN	32	33.2	23.8	0.0	0.0	0.0	80.2	0.1	-5.7	0.0	0.0	4.8	0.0	0.0	-22.3
351	425903.49	5409397.40	331.88	0	DEN	63	51.1	23.8	0.0	0.0	0.0	80.2	0.4	-5.7	0.0	0.0	4.8	0.0	0.0	-4.7
351	425903.49	5409397.40	331.88	0	DEN	125	58.0	23.8	0.0	0.0	0.0	80.2	1.2	2.2	0.0	0.0	2.6	0.0	0.0	-4.4
351	425903.49	5409397.40	331.88	0	DEN	250	58.8	23.8	0.0	0.0	0.0	80.2	3.0	-0.2	0.0	0.0	4.8	0.0	0.0	-5.2
351	425903.49	5409397.40	331.88	0	DEN	500	62.2	23.8	0.0	0.0	0.0	80.2	5.6	-1.6	0.0	0.0	4.8	0.0	0.0	-2.9
351	425903.49	5409397.40	331.88	0	DEN	1000	61.6	23.8	0.0	0.0	0.0	80.2	10.6	-1.6	0.0	0.0	4.8	0.0	0.0	-8.6
351	425903.49	5409397.40	331.88	0	DEN	2000	59.4	23.8	0.0	0.0	0.0	80.2	28.0	-1.6	0.0	0.0	4.9	0.0	0.0	-28.2
351	425903.49	5409397.40	331.88	0	DEN	4000	54.5	23.8	0.0	0.0	0.0	80.2	94.8	-1.6	0.0	0.0	4.9	0.0	0.0	-100.0
351	425903.49	5409397.40	331.88	0	DEN	8000	45.6	23.8	0.0	0.0	0.0	80.2	338.2	-1.6	0.0	0.0	5.1	0.0	0.0	-352.5
391	426679.20	5410062.91	390.08	0	DEN	32	33.2	23.8	0.0	0.0	0.0	81.1	0.1	-5.8	0.0	0.0	4.8	0.0	0.0	-23.2
391	426679.20	5410062.91	390.08	0	DEN	63	51.1	23.8	0.0	0.0	0.0	81.1	0.4	-5.8	0.0	0.0	4.8	0.0	0.0	-5.6
391	426679.20	5410062.91	390.08	0	DEN	125	58.0	23.8	0.0	0.0	0.0	81.1	1.3	1.5	0.0	0.0	3.3	0.0	0.0	-5.3
391	426679.20	5410062.91	390.08	0	DEN	250	58.8	23.8	0.0	0.0	0.0	81.1	3.3	-1.0	0.0	0.0	4.8	0.0	0.0	-5.6
391	426679.20	5410062.91	390.08	0	DEN	500	62.2	23.8	0.0	0.0	0.0	81.1	6.2	-2.4	0.0	0.0	4.8	0.0	0.0	-3.6
391	426679.20	5410062.91	390.08	0	DEN	1000	61.6	23.8	0.0	0.0	0.0	81.1	11.7	-2.4	0.0	0.0	4.8	0.0	0.0	-9.8
391	426679.20	5410062.91	390.08	0	DEN	2000	59.4	23.8	0.0	0.0	0.0	81.1	31.0	-2.4	0.0	0.0	4.8	0.0	0.0	-31.2
391	426679.20	5410062.91	390.08	0	DEN	4000	54.5	23.8	0.0	0.0	0.0	81.1	105.0	-2.4	0.0	0.0	4.8	0.0	0.0	-110.2
391	426679.20	5410062.91	390.08	0	DEN	8000	45.6	23.8	0.0	0.0	0.0	81.1	374.6	-2.4	0.0	0.0	4.8	0.0	0.0	-388.6
393	426260.61	5409507.61	362.88	0	DEN	32	33.2	22.6	0.0	0.0	0.0	80.0	0.1	-5.7	0.0	0.0	4.8	0.0	0.0	-23.3
393	426260.61	5409507.61	362.88	0	DEN	63	51.1	22.6	0.0	0.0	0.0	80.0	0.3	-5.7	0.0	0.0	4.8	0.0	0.0	-5.6
393	426260.61	5409507.61	362.88	0	DEN	125	58.0	22.6	0.0	0.0	0.0	80.0	1.2	2.3	0.0	0.0	2.5	0.0	0.0	-5.3
393	426260.61	5409507.61	362.88	0	DEN	250	58.8	22.6	0.0	0.0	0.0	80.0	2.9	-0.1	0.0	0.0	4.8	0.0	0.0	-6.1
393	426260.61	5409507.61	362.88	0	DEN	500	62.2	22.6	0.0	0.0	0.0	80.0	5.4	-1.5	0.0	0.0	4.8	0.0	0.0	-3.8
393	426260.61	5409507.61	362.88	0	DEN	1000	61.6	22.6	0.0	0.0	0.0	80.0	10.3	-1.5	0.0	0.0	4.8	0.0	0.0	-9.3
393	426260.61	5409507.61	362.88	0	DEN	2000	59.4	22.6	0.0	0.0	0.0	80.0	27.2	-1.5	0.0	0.0	4.8	0.0	0.0	-28.4
393	426260.61	5409507.61	362.88	0	DEN	4000	54.5	22.6	0.0	0.0	0.0	80.0	92.4	-1.5	0.0	0.0	4.8	0.0	0.0	-98.5
393	426260.61	5409507.61	362.88	0	DEN	8000	45.6	22.6	0.0	0.0	0.0	80.0	329.5	-1.5	0.0	0.0	4.8	0.0	0.0	-344.5
400	425688.37	5409424.96	316.47	0	DEN	32	33.2	22.9	0.0	0.0	0.0	80.6	0.1	-5.7	0.0	0.0	4.8	0.0	0.0	-23.7
400	425688.37	5409424.96	316.47	0	DEN	63	51.1	22.9	0.0	0.0	0.0	80.6	0.4	-5.7	0.0	0.0	4.8	0.0	0.0	-6.0
400	425688.37	5409424.96	316.47	0	DEN	125	58.0	22.9	0.0	0.0	0.0	80.6	1.2	2.3	0.0	0.0	2.5	0.0	0.0	-5.8
400	425688.37	5409424.96	316.47	0	DEN	250	58.8	22.9	0.0	0.0	0.0	80.6	3.2	-0.2	0.0	0.0	4.9	0.0	0.0	-6.8
400	425688.37	5409424.96	316.47	0	DEN	500	62.2	22.9	0.0	0.0	0.0	80.6	5.9	-1.6	0.0	0.0	5.0	0.0	0.0	-4.7
400	425688.37	5409424.96	316.47	0	DEN	1000	61.6	22.9	0.0	0.0	0.0	80.6	11.1	-1.6	0.0	0.0	5.1	0.0	0.0	-10.8
400	425688.37	5409424.96	316.47	0	DEN	2000	59.4	22.9	0.0	0.0	0.0	80.6	29.3	-1.6	0.0	0.0	5.5	0.0	0.0	-31.5
400	425688.37	5409424.96	316.47	0	DEN	4000	54.5	22.9	0.0	0.0	0.0	80.6	99.5	-1.6	0.0	0.0	6.1	0.0	0.0	-107.2
400	425688.37	5409424.96	316.47	0	DEN	8000	45.6	22.9	0.0	0.0	0.0	80.6	354.9	-1.6	0.0	0.0	7.1	0.0	0.0	-372.6
406	426364.46	5409644.32	369.88	0	DEN	32	33.2	22.3	0.0	0.0	0.0	80.3	0.1	-5.7	0.0	0.0	4.8	0.0	0.0	-23.8
406	426364.46	5409644.32	369.88	0	DEN	63	51.1	22.3	0.0	0.0	0.0	80.3	0.4	-5.7	0.0	0.0	4.8	0.0	0.0	-6.2
406	426364.46	5409644.32	369.88	0	DEN	125	58.0	22.3	0.0	0.0	0.0	80.3	1.2	2.0	0.0	0.0	2.8	0.0	0.0	-5.9
406	426364.46	5409644.32	369.88	0	DEN	250	58.8	22.3	0.0	0.0	0.0	80.3	3.0	-0.5	0.0	0.0	4.8	0.0	0.0	-6.4
406	426364.46	5409644.32	369.88	0	DEN	500	62.2	22.3	0.0	0.0	0.0	80.3	5.6	-1.9	0.0	0.0	4.8	0.0	0.0	-4.1
406	426364.46	5409644.32	369.88	0	DEN	1000	61.6	22.3	0.0	0.0	0.0	80.3	10.6	-1.9	0.0	0.0	4.8	0.0	0.0	-9.7
406	426364.46	5409644.32	369.88	0	DEN	2000	59.4	22.3	0.0	0.0	0.0	80.3	28.1	-1.9	0.0	0.0	4.8	0.0	0.0	-29.4
406	426364.46	5409644.32	369.88	0	DEN	4000	54.5	22.3	0.0	0.0	0.0	80.3	95.1	-1.9	0.0	0.0	4.8	0.0	0.0	-101.4
406	426364.46	5409644.32	369.88	0	DEN	8000	45.6	22.3	0.0	0.0	0.0	80.3	339.3	-1.9	0.0	0.0	4.8	0.0	0.0	-354.4
408	425499.74	5409457.81	299.87	0	DEN	32	33.2	22.8	0.0	0.0	0.0	81.0	0.1	-5.8	0.0	0.0	5.2	0.0	0.0	-24.5
408	425499.74	5409457.81	299.87	0	DEN	63	51.1	22.8	0.0	0.0	0.0	81.0	0.4	-5.8	0.0	0.0	5.5	0.0	0.0	-7.3
408	425499.74	5409457.81	299.87	0	DEN	125	58.0	22.8	0.0	0.0	0.0	81.0	1.3	2.2	0.0	0.0	4.0	0.0	0.0	-7.7
408	425499.74	5409457.81	299.87	0	DEN	250	58.8	22.8	0.0	0.0	0.0	81.0	3.3	-0.3	0.0	0.0	7.2	0.0	0.0	-9.6
408	425499.74	5409457.81	299.87	0	DEN	500	62.2	22.8	0.0	0.0	0.0	81.0	6.1	-1.7	0.0	0.0	8.8	0.0	0.0	-9.2
408	425499.74	5409457.81	299.87	0	DEN	1000	61.6	22.8	0.0	0.0	0.0	81.0	11.6	-1.7	0.0	0.0	10.8	0.0	0.0	-17.3
408	425499.74	5409457.81	299.87	0	DEN	2000	59.4	22.8	0.0	0.0	0.0	81.0	30.7	-1.7	0.0	0.0	13.3	0.0	0.0	-41.1
408	425499.74	5409457.81	299.87	0	DEN	4000	54.5	22.8	0.0	0.0	0.0	81.0	104.1	-1.7	0.0	0.0	16.0	0.0	0.0	-122.0
408	425499.74	5409457.81	299.87	0	DEN	8000	45.6	22.8	0.0	0.0	0.0	81.0	371.2	-1.7	0.0	0.0	18.8	0.0	0.0	-400.9
409	426489.51	5409758.77	376.62	0	DEN	32	33.2	22.3	0.0	0.0	0.0	80.4	0.1	-5.7	0.0	0.0	4.8	0.0	0.0	-24.0

Line Source, ISO 9613, Name: "TRE_OP-Mill", ID: ""																					
Nr.	X	Y	Z	Refl.	DEN	Freq.	Lw	l/a	Optime	K0	Dc	Adiv	Aatm	Agr	Afol	Ahous	Abar	Cmet	RL	Lr
	(m)	(m)	(m)			(Hz)	dB(A)	dB	dB	(dB)	(dB)	(dB)	(dB)	(dB)	(dB)	(dB)	(dB)	(dB)	(dB)	dB(A)
409	426489.51	5409758.77	376.62	0	DEN	63	51.1	22.3	0.0	0.0	0.0	80.4	0.4	-5.7	0.0	0.0	4.8	0.0	0.0	-6.4
409	426489.51	5409758.77	376.62	0	DEN	125	58.0	22.3	0.0	0.0	0.0	80.4	1.2	2.0	0.0	0.0	2.7	0.0	0.0	-6.1
409	426489.51	5409758.77	376.62	0	DEN	250	58.8	22.3	0.0	0.0	0.0	80.4	3.1	-0.4	0.0	0.0	4.8	0.0	0.0	-6.8
409	426489.51	5409758.77	376.62	0	DEN	500	62.2	22.3	0.0	0.0	0.0	80.4	5.7	-1.9	0.0	0.0	4.8	0.0	0.0	-4.6
409	426489.51	5409758.77	376.62	0	DEN	1000	61.6	22.3	0.0	0.0	0.0	80.4	10.9	-1.9	0.0	0.0	4.8	0.0	0.0	-10.3
409	426489.51	5409758.77	376.62	0	DEN	2000	59.4	22.3	0.0	0.0	0.0	80.4	28.7	-1.9	0.0	0.0	4.8	0.0	0.0	-30.3
409	426489.51	5409758.77	376.62	0	DEN	4000	54.5	22.3	0.0	0.0	0.0	80.4	97.2	-1.9	0.0	0.0	4.8	0.0	0.0	-103.8
409	426489.51	5409758.77	376.62	0	DEN	8000	45.6	22.3	0.0	0.0	0.0	80.4	346.7	-1.9	0.0	0.0	4.8	0.0	0.0	-362.2
412	425549.54	5409548.94	266.36	0	DEN	32	33.2	22.6	0.0	0.0	0.0	81.2	0.1	-5.8	0.0	0.0	17.8	0.0	0.0	-37.5
412	425549.54	5409548.94	266.36	0	DEN	63	51.1	22.6	0.0	0.0	0.0	81.2	0.4	-5.8	0.0	0.0	20.0	0.0	0.0	-22.0
412	425549.54	5409548.94	266.36	0	DEN	125	58.0	22.6	0.0	0.0	0.0	81.2	1.3	2.1	0.0	0.0	17.9	0.0	0.0	-21.8
412	425549.54	5409548.94	266.36	0	DEN	250	58.8	22.6	0.0	0.0	0.0	81.2	3.4	-0.4	0.0	0.0	20.0	0.0	0.0	-22.7
412	425549.54	5409548.94	266.36	0	DEN	500	62.2	22.6	0.0	0.0	0.0	81.2	6.2	-1.8	0.0	0.0	20.0	0.0	0.0	-20.7
412	425549.54	5409548.94	266.36	0	DEN	1000	61.6	22.6	0.0	0.0	0.0	81.2	11.8	-1.8	0.0	0.0	20.0	0.0	0.0	-26.9
412	425549.54	5409548.94	266.36	0	DEN	2000	59.4	22.6	0.0	0.0	0.0	81.2	31.1	-1.8	0.0	0.0	20.0	0.0	0.0	-48.4
412	425549.54	5409548.94	266.36	0	DEN	4000	54.5	22.6	0.0	0.0	0.0	81.2	105.5	-1.8	0.0	0.0	20.0	0.0	0.0	-127.7
412	425549.54	5409548.94	266.36	0	DEN	8000	45.6	22.6	0.0	0.0	0.0	81.2	376.3	-1.8	0.0	0.0	20.0	0.0	0.0	-407.4
417	425716.98	5409561.66	261.97	0	DEN	32	33.2	22.3	0.0	0.0	0.0	80.9	0.1	-5.8	0.0	0.0	18.4	0.0	0.0	-38.1
417	425716.98	5409561.66	261.97	0	DEN	63	51.1	22.3	0.0	0.0	0.0	80.9	0.4	-5.8	0.0	0.0	20.0	0.0	0.0	-22.1
417	425716.98	5409561.66	261.97	0	DEN	125	58.0	22.3	0.0	0.0	0.0	80.9	1.3	2.0	0.0	0.0	18.0	0.0	0.0	-21.8
417	425716.98	5409561.66	261.97	0	DEN	250	58.8	22.3	0.0	0.0	0.0	80.9	3.3	-0.4	0.0	0.0	20.0	0.0	0.0	-22.6
417	425716.98	5409561.66	261.97	0	DEN	500	62.2	22.3	0.0	0.0	0.0	80.9	6.0	-1.8	0.0	0.0	20.0	0.0	0.0	-20.6
417	425716.98	5409561.66	261.97	0	DEN	1000	61.6	22.3	0.0	0.0	0.0	80.9	11.5	-1.8	0.0	0.0	20.0	0.0	0.0	-26.6
417	425716.98	5409561.66	261.97	0	DEN	2000	59.4	22.3	0.0	0.0	0.0	80.9	30.3	-1.8	0.0	0.0	20.0	0.0	0.0	-47.7
417	425716.98	5409561.66	261.97	0	DEN	4000	54.5	22.3	0.0	0.0	0.0	80.9	102.7	-1.8	0.0	0.0	20.0	0.0	0.0	-125.0
417	425716.98	5409561.66	261.97	0	DEN	8000	45.6	22.3	0.0	0.0	0.0	80.9	366.4	-1.8	0.0	0.0	20.0	0.0	0.0	-397.5
420	426087.88	5409382.57	342.63	0	DEN	32	33.2	21.2	0.0	0.0	0.0	79.9	0.1	-5.7	0.0	0.0	4.8	0.0	0.0	-24.6
420	426087.88	5409382.57	342.63	0	DEN	63	51.1	21.2	0.0	0.0	0.0	79.9	0.3	-5.7	0.0	0.0	4.8	0.0	0.0	-7.0
420	426087.88	5409382.57	342.63	0	DEN	125	58.0	21.2	0.0	0.0	0.0	79.9	1.1	2.1	0.0	0.0	2.6	0.0	0.0	-6.6
420	426087.88	5409382.57	342.63	0	DEN	250	58.8	21.2	0.0	0.0	0.0	79.9	2.9	-0.3	0.0	0.0	4.8	0.0	0.0	-7.2
420	426087.88	5409382.57	342.63	0	DEN	500	62.2	21.2	0.0	0.0	0.0	79.9	5.4	-1.7	0.0	0.0	4.8	0.0	0.0	-4.9
420	426087.88	5409382.57	342.63	0	DEN	1000	61.6	21.2	0.0	0.0	0.0	79.9	10.2	-1.7	0.0	0.0	4.8	0.0	0.0	-10.3
420	426087.88	5409382.57	342.63	0	DEN	2000	59.4	21.2	0.0	0.0	0.0	79.9	26.9	-1.7	0.0	0.0	4.8	0.0	0.0	-29.3
420	426087.88	5409382.57	342.63	0	DEN	4000	54.5	21.2	0.0	0.0	0.0	79.9	91.3	-1.7	0.0	0.0	4.9	0.0	0.0	-98.7
420	426087.88	5409382.57	342.63	0	DEN	8000	45.6	21.2	0.0	0.0	0.0	79.9	325.7	-1.7	0.0	0.0	5.1	0.0	0.0	-342.1
421	425455.23	5409792.68	252.00	0	DEN	32	33.2	23.0	0.0	0.0	0.0	81.8	0.1	-5.8	0.0	0.0	17.5	0.0	0.0	-37.3
421	425455.23	5409792.68	252.00	0	DEN	63	51.1	23.0	0.0	0.0	0.0	81.8	0.4	-5.8	0.0	0.0	20.7	0.0	0.0	-22.9
421	425455.23	5409792.68	252.00	0	DEN	125	58.0	23.0	0.0	0.0	0.0	81.8	1.4	1.8	0.0	0.0	21.8	0.0	0.0	-25.8
421	425455.23	5409792.68	252.00	0	DEN	250	58.8	23.0	0.0	0.0	0.0	81.8	3.6	-0.6	0.0	0.0	25.0	0.0	0.0	-27.9
421	425455.23	5409792.68	252.00	0	DEN	500	62.2	23.0	0.0	0.0	0.0	81.8	6.7	-2.0	0.0	0.0	25.0	0.0	0.0	-26.2
421	425455.23	5409792.68	252.00	0	DEN	1000	61.6	23.0	0.0	0.0	0.0	81.8	12.7	-2.0	0.0	0.0	25.0	0.0	0.0	-32.8
421	425455.23	5409792.68	252.00	0	DEN	2000	59.4	23.0	0.0	0.0	0.0	81.8	33.6	-2.0	0.0	0.0	25.0	0.0	0.0	-55.9
421	425455.23	5409792.68	252.00	0	DEN	4000	54.5	23.0	0.0	0.0	0.0	81.8	113.8	-2.0	0.0	0.0	25.0	0.0	0.0	-141.0
421	425455.23	5409792.68	252.00	0	DEN	8000	45.6	23.0	0.0	0.0	0.0	81.8	405.9	-2.0	0.0	0.0	25.0	0.0	0.0	-442.0
422	426583.83	5409889.11	381.50	0	DEN	32	33.2	21.9	0.0	0.0	0.0	80.7	0.1	-5.8	0.0	0.0	4.8	0.0	0.0	-24.7
422	426583.83	5409889.11	381.50	0	DEN	63	51.1	21.9	0.0	0.0	0.0	80.7	0.4	-5.8	0.0	0.0	4.8	0.0	0.0	-7.1
422	426583.83	5409889.11	381.50	0	DEN	125	58.0	21.9	0.0	0.0	0.0	80.7	1.3	1.6	0.0	0.0	3.2	0.0	0.0	-6.8
422	426583.83	5409889.11	381.50	0	DEN	250	58.8	21.9	0.0	0.0	0.0	80.7	3.2	-0.9	0.0	0.0	4.8	0.0	0.0	-7.0
422	426583.83	5409889.11	381.50	0	DEN	500	62.2	21.9	0.0	0.0	0.0	80.7	5.9	-2.3	0.0	0.0	4.8	0.0	0.0	-5.0
422	426583.83	5409889.11	381.50	0	DEN	1000	61.6	21.9	0.0	0.0	0.0	80.7	11.2	-2.3	0.0	0.0	4.8	0.0	0.0	-10.9
422	426583.83	5409889.11	381.50	0	DEN	2000	59.4	21.9	0.0	0.0	0.0	80.7	29.6	-2.3	0.0	0.0	4.8	0.0	0.0	-31.5
422	426583.83	5409889.11	381.50	0	DEN	4000	54.5	21.9	0.0	0.0	0.0	80.7	100.3	-2.3	0.0	0.0	4.8	0.0	0.0	-107.1
422	426583.83	5409889.11	381.50	0	DEN	8000	45.6	21.9	0.0	0.0	0.0	80.7	357.9	-2.3	0.0	0.0	4.8	0.0	0.0	-373.6
426	425632.20	5409752.41	250.04	0	DEN	32	33.2	22.5	0.0	0.0	0.0	81.5	0.1	-5.8	0.0	0.0	9.1	0.0	0.0	-29.2
426	425632.20	5409752.41	250.04	0	DEN	63	51.1	22.5	0.0	0.0	0.0	81.5	0.4	-5.8	0.0	0.0	12.4	0.0	0.0	-14.9
426	425632.20	5409752.41	250.04	0	DEN	125	58.0	22.5	0.0	0.0	0.0	81.5	1.4	1.9	0.0	0.0	14.4	0.0	0.0	-18.6
426	425632.20	5409752.41	250.04	0	DEN	250	58.8	22.5	0.0	0.0	0.0	81.5	3.5	-0.6	0.0	0.0	19.8	0.0	0.0	-22.9
426	425632.20	5409752.41	250.04	0	DEN	500	62.2	22.5	0.0	0.0	0.0	81.5	6.4	-2.0	0.0	0.0	23.0	0.0	0.0	-24.2
426	425632.20	5409752.41	250.04	0	DEN	1000	61.6	22.5	0.0	0.0	0.0	81.5	12.2	-2.0	0.0	0.0	25.0	0.0	0.0	-32.6
426	425632.20	5409752.41	250.04	0	DEN	2000	59.4	22.5	0.0	0.0	0.0	81.5	32.3	-2.0	0.0	0.0	25.0	0.0	0.0	-54.9
426	425632.20	5409752.41	250.04	0	DEN	4000	54.5	22.5	0.0	0.0	0.0	81.5	109.5	-2.0	0.0	0.0	25.0	0.0	0.0	-137.0
426	425632.20	5409752.41	250.04	0	DEN	8000	45.6	22.5	0.0	0.0	0.0	81.5	390.5	-2.0	0.0	0.0	25.0	0.0	0.0	-426.9
431	425751.95	5409649.62	247.87	0	DEN	32	33.2	21.6	0.0	0.0	0.0	81.1	0.1	-5.8	0.0	0.0	7.0	0.0	0.0	-27.5

Line Source, ISO 9613, Name: "TRE_OP-Mill", ID: ""																					
Nr.	X	Y	Z	Refl.	DEN	Freq.	Lw	l/a	Optime	K0	Dc	Adiv	Aatm	Agr	Afol	Ahous	Abar	Cmet	RL	Lr
	(m)	(m)	(m)			(Hz)	dB(A)	dB	dB	(dB)	(dB)	(dB)	(dB)	(dB)	(dB)	(dB)	(dB)	(dB)	(dB)	dB(A)
431	425751.95	5409649.62	247.87	0	DEN	63	51.1	21.6	0.0	0.0	0.0	81.1	0.4	-5.8	0.0	0.0	8.5	0.0	0.0	-11.4
431	425751.95	5409649.62	247.87	0	DEN	125	58.0	21.6	0.0	0.0	0.0	81.1	1.3	2.0	0.0	0.0	8.5	0.0	0.0	-13.1
431	425751.95	5409649.62	247.87	0	DEN	250	58.8	21.6	0.0	0.0	0.0	81.1	3.3	-0.5	0.0	0.0	12.8	0.0	0.0	-16.2
431	425751.95	5409649.62	247.87	0	DEN	500	62.2	21.6	0.0	0.0	0.0	81.1	6.1	-1.9	0.0	0.0	15.4	0.0	0.0	-16.9
431	425751.95	5409649.62	247.87	0	DEN	1000	61.6	21.6	0.0	0.0	0.0	81.1	11.7	-1.9	0.0	0.0	18.3	0.0	0.0	-25.9
431	425751.95	5409649.62	247.87	0	DEN	2000	59.4	21.6	0.0	0.0	0.0	81.1	30.8	-1.9	0.0	0.0	21.2	0.0	0.0	-50.1
431	425751.95	5409649.62	247.87	0	DEN	4000	54.5	21.6	0.0	0.0	0.0	81.1	104.5	-1.9	0.0	0.0	24.1	0.0	0.0	-131.7
431	425751.95	5409649.62	247.87	0	DEN	8000	45.6	21.6	0.0	0.0	0.0	81.1	372.8	-1.9	0.0	0.0	25.0	0.0	0.0	-409.8
436	425358.79	5409535.17	277.40	0	DEN	32	33.2	21.7	0.0	0.0	0.0	81.4	0.1	-5.8	0.0	0.0	5.1	0.0	0.0	-25.9
436	425358.79	5409535.17	277.40	0	DEN	63	51.1	21.7	0.0	0.0	0.0	81.4	0.4	-5.8	0.0	0.0	5.4	0.0	0.0	-8.7
436	425358.79	5409535.17	277.40	0	DEN	125	58.0	21.7	0.0	0.0	0.0	81.4	1.4	2.1	0.0	0.0	3.9	0.0	0.0	-9.0
436	425358.79	5409535.17	277.40	0	DEN	250	58.8	21.7	0.0	0.0	0.0	81.4	3.5	-0.4	0.0	0.0	6.9	0.0	0.0	-10.9
436	425358.79	5409535.17	277.40	0	DEN	500	62.2	21.7	0.0	0.0	0.0	81.4	6.4	-1.8	0.0	0.0	8.4	0.0	0.0	-10.5
436	425358.79	5409535.17	277.40	0	DEN	1000	61.6	21.7	0.0	0.0	0.0	81.4	12.2	-1.8	0.0	0.0	10.3	0.0	0.0	-18.8
436	425358.79	5409535.17	277.40	0	DEN	2000	59.4	21.7	0.0	0.0	0.0	81.4	32.1	-1.8	0.0	0.0	12.6	0.0	0.0	-43.3
436	425358.79	5409535.17	277.40	0	DEN	4000	54.5	21.7	0.0	0.0	0.0	81.4	109.0	-1.8	0.0	0.0	15.3	0.0	0.0	-127.7
436	425358.79	5409535.17	277.40	0	DEN	8000	45.6	21.7	0.0	0.0	0.0	81.4	388.6	-1.8	0.0	0.0	18.1	0.0	0.0	-419.0
437	425307.93	5409669.75	264.69	0	DEN	32	33.2	22.1	0.0	0.0	0.0	81.8	0.1	-5.8	0.0	0.0	4.8	0.0	0.0	-25.6
437	425307.93	5409669.75	264.69	0	DEN	63	51.1	22.1	0.0	0.0	0.0	81.8	0.4	-5.8	0.0	0.0	4.8	0.0	0.0	-8.0
437	425307.93	5409669.75	264.69	0	DEN	125	58.0	22.1	0.0	0.0	0.0	81.8	1.4	1.9	0.0	0.0	2.9	0.0	0.0	-7.9
437	425307.93	5409669.75	264.69	0	DEN	250	58.8	22.1	0.0	0.0	0.0	81.8	3.6	-0.5	0.0	0.0	4.9	0.0	0.0	-8.8
437	425307.93	5409669.75	264.69	0	DEN	500	62.2	22.1	0.0	0.0	0.0	81.8	6.7	-1.9	0.0	0.0	4.9	0.0	0.0	-7.2
437	425307.93	5409669.75	264.69	0	DEN	1000	61.6	22.1	0.0	0.0	0.0	81.8	12.7	-1.9	0.0	0.0	5.1	0.0	0.0	-13.9
437	425307.93	5409669.75	264.69	0	DEN	2000	59.4	22.1	0.0	0.0	0.0	81.8	33.5	-1.9	0.0	0.0	5.4	0.0	0.0	-37.2
437	425307.93	5409669.75	264.69	0	DEN	4000	54.5	22.1	0.0	0.0	0.0	81.8	113.4	-1.9	0.0	0.0	6.0	0.0	0.0	-122.7
437	425307.93	5409669.75	264.69	0	DEN	8000	45.6	22.1	0.0	0.0	0.0	81.8	404.6	-1.9	0.0	0.0	6.9	0.0	0.0	-423.7
460	425373.63	5409676.11	281.78	0	DEN	32	33.2	21.8	0.0	0.0	0.0	81.7	0.1	-5.8	0.0	0.0	19.8	0.0	0.0	-40.8
460	425373.63	5409676.11	281.78	0	DEN	63	51.1	21.8	0.0	0.0	0.0	81.7	0.4	-5.8	0.0	0.0	23.6	0.0	0.0	-27.0
460	425373.63	5409676.11	281.78	0	DEN	125	58.0	21.8	0.0	0.0	0.0	81.7	1.4	1.9	0.0	0.0	23.1	0.0	0.0	-28.2
460	425373.63	5409676.11	281.78	0	DEN	250	58.8	21.8	0.0	0.0	0.0	81.7	3.6	-0.5	0.0	0.0	25.0	0.0	0.0	-29.1
460	425373.63	5409676.11	281.78	0	DEN	500	62.2	21.8	0.0	0.0	0.0	81.7	6.6	-1.9	0.0	0.0	25.0	0.0	0.0	-27.3
460	425373.63	5409676.11	281.78	0	DEN	1000	61.6	21.8	0.0	0.0	0.0	81.7	12.5	-1.9	0.0	0.0	25.0	0.0	0.0	-33.8
460	425373.63	5409676.11	281.78	0	DEN	2000	59.4	21.8	0.0	0.0	0.0	81.7	33.1	-1.9	0.0	0.0	25.0	0.0	0.0	-56.6
460	425373.63	5409676.11	281.78	0	DEN	4000	54.5	21.8	0.0	0.0	0.0	81.7	112.3	-1.9	0.0	0.0	25.0	0.0	0.0	-140.7
460	425373.63	5409676.11	281.78	0	DEN	8000	45.6	21.8	0.0	0.0	0.0	81.7	400.5	-1.9	0.0	0.0	25.0	0.0	0.0	-437.8
471	425413.90	5409600.87	235.41	0	DEN	32	33.2	20.9	0.0	0.0	0.0	81.5	0.1	-5.8	0.0	0.0	23.3	0.0	0.0	-45.0
471	425413.90	5409600.87	235.41	0	DEN	63	51.1	20.9	0.0	0.0	0.0	81.5	0.4	-5.8	0.0	0.0	25.0	0.0	0.0	-29.1
471	425413.90	5409600.87	235.41	0	DEN	125	58.0	20.9	0.0	0.0	0.0	81.5	1.4	2.0	0.0	0.0	23.0	0.0	0.0	-29.0
471	425413.90	5409600.87	235.41	0	DEN	250	58.8	20.9	0.0	0.0	0.0	81.5	3.5	-0.4	0.0	0.0	25.0	0.0	0.0	-29.8
471	425413.90	5409600.87	235.41	0	DEN	500	62.2	20.9	0.0	0.0	0.0	81.5	6.4	-1.8	0.0	0.0	25.0	0.0	0.0	-28.0
471	425413.90	5409600.87	235.41	0	DEN	1000	61.6	20.9	0.0	0.0	0.0	81.5	12.2	-1.8	0.0	0.0	25.0	0.0	0.0	-34.4
471	425413.90	5409600.87	235.41	0	DEN	2000	59.4	20.9	0.0	0.0	0.0	81.5	32.3	-1.8	0.0	0.0	25.0	0.0	0.0	-56.6
471	425413.90	5409600.87	235.41	0	DEN	4000	54.5	20.9	0.0	0.0	0.0	81.5	109.6	-1.8	0.0	0.0	25.0	0.0	0.0	-138.8
471	425413.90	5409600.87	235.41	0	DEN	8000	45.6	20.9	0.0	0.0	0.0	81.5	390.8	-1.8	0.0	0.0	25.0	0.0	0.0	-428.9
479	426188.55	5409404.82	352.74	0	DEN	32	33.2	19.1	0.0	0.0	0.0	79.8	0.1	-5.7	0.0	0.0	4.8	0.0	0.0	-26.6
479	426188.55	5409404.82	352.74	0	DEN	63	51.1	19.1	0.0	0.0	0.0	79.8	0.3	-5.7	0.0	0.0	4.8	0.0	0.0	-9.0
479	426188.55	5409404.82	352.74	0	DEN	125	58.0	19.1	0.0	0.0	0.0	79.8	1.1	2.2	0.0	0.0	2.6	0.0	0.0	-8.6
479	426188.55	5409404.82	352.74	0	DEN	250	58.8	19.1	0.0	0.0	0.0	79.8	2.9	-0.3	0.0	0.0	4.8	0.0	0.0	-9.3
479	426188.55	5409404.82	352.74	0	DEN	500	62.2	19.1	0.0	0.0	0.0	79.8	5.3	-1.7	0.0	0.0	4.9	0.0	0.0	-7.0
479	426188.55	5409404.82	352.74	0	DEN	1000	61.6	19.1	0.0	0.0	0.0	79.8	10.1	-1.7	0.0	0.0	5.0	0.0	0.0	-12.5
479	426188.55	5409404.82	352.74	0	DEN	2000	59.4	19.1	0.0	0.0	0.0	79.8	26.7	-1.7	0.0	0.0	5.2	0.0	0.0	-31.4
479	426188.55	5409404.82	352.74	0	DEN	4000	54.5	19.1	0.0	0.0	0.0	79.8	90.4	-1.7	0.0	0.0	5.5	0.0	0.0	-100.4
479	426188.55	5409404.82	352.74	0	DEN	8000	45.6	19.1	0.0	0.0	0.0	79.8	322.4	-1.7	0.0	0.0	6.1	0.0	0.0	-341.9
499	425425.56	5409721.68	359.01	0	DEN	32	33.2	19.8	0.0	0.0	0.0	81.7	0.1	-5.8	0.0	0.0	4.8	0.0	0.0	-27.8
499	425425.56	5409721.68	359.01	0	DEN	63	51.1	19.8	0.0	0.0	0.0	81.7	0.4	-5.8	0.0	0.0	4.8	0.0	0.0	-10.2
499	425425.56	5409721.68	359.01	0	DEN	125	58.0	19.8	0.0	0.0	0.0	81.7	1.4	1.9	0.0	0.0	2.9	0.0	0.0	-10.1
499	425425.56	5409721.68	359.01	0	DEN	250	58.8	19.8	0.0	0.0	0.0	81.7	3.6	-0.6	0.0	0.0	4.8	0.0	0.0	-10.9
499	425425.56	5409721.68	359.01	0	DEN	500	62.2	19.8	0.0	0.0	0.0	81.7	6.6	-2.0	0.0	0.0	4.8	0.0	0.0	-9.1
499	425425.56	5409721.68	359.01	0	DEN	1000	61.6	19.8	0.0	0.0	0.0	81.7	12.5	-2.0	0.0	0.0	4.8	0.0	0.0	-15.6
499	425425.56	5409721.68	359.01	0	DEN	2000	59.4	19.8	0.0	0.0	0.0	81.7	33.2	-2.0	0.0	0.0	4.8	0.0	0.0	-38.5
499	425425.56	5409721.68	359.01	0	DEN	4000	54.5	19.8	0.0	0.0	0.0	81.7	112.4	-2.0	0.0	0.0	4.8	0.0	0.0	-122.6
499	425425.56	5409721.68	359.01	0	DEN	8000	45.6	19.8	0.0	0.0	0.0	81.7	401.0	-2.0	0.0	0.0	4.8	0.0	0.0	-420.1
518	425330.18	5409769.36	259.98	0	DEN	32	33.2	18.0	0.0	0.0	0.0	81.9	0.1	-5.8	0.0	0.0	16.6	0.0	0.0	-41.7

Line Source, ISO 9613, Name: "TRE_OP-Mill", ID: ""																					
Nr.	X	Y	Z	Refl.	DEN	Freq.	Lw	l/a	Optime	K0	Dc	Adiv	Aatm	Agr	Afol	Ahous	Abar	Cmet	RL	Lr
	(m)	(m)	(m)			(Hz)	dB(A)	dB	dB	(dB)	(dB)	(dB)	(dB)	(dB)	(dB)	(dB)	(dB)	(dB)	(dB)	dB(A)
518	425330.18	5409769.36	259.98	0	DEN	63	51.1	18.0	0.0	0.0	0.0	81.9	0.4	-5.8	0.0	0.0	20.0	0.0	0.0	-27.5
518	425330.18	5409769.36	259.98	0	DEN	125	58.0	18.0	0.0	0.0	0.0	81.9	1.4	1.8	0.0	0.0	21.2	0.0	0.0	-30.4
518	425330.18	5409769.36	259.98	0	DEN	250	58.8	18.0	0.0	0.0	0.0	81.9	3.7	-0.6	0.0	0.0	25.0	0.0	0.0	-33.2
518	425330.18	5409769.36	259.98	0	DEN	500	62.2	18.0	0.0	0.0	0.0	81.9	6.8	-2.0	0.0	0.0	25.0	0.0	0.0	-31.5
518	425330.18	5409769.36	259.98	0	DEN	1000	61.6	18.0	0.0	0.0	0.0	81.9	12.9	-2.0	0.0	0.0	25.0	0.0	0.0	-38.2
518	425330.18	5409769.36	259.98	0	DEN	2000	59.4	18.0	0.0	0.0	0.0	81.9	34.1	-2.0	0.0	0.0	25.0	0.0	0.0	-61.6
518	425330.18	5409769.36	259.98	0	DEN	4000	54.5	18.0	0.0	0.0	0.0	81.9	115.6	-2.0	0.0	0.0	25.0	0.0	0.0	-148.0
518	425330.18	5409769.36	259.98	0	DEN	8000	45.6	18.0	0.0	0.0	0.0	81.9	412.3	-2.0	0.0	0.0	25.0	0.0	0.0	-453.6

Line Source, ISO 9613, Name: "WTR_NPAG", ID: ""																					
Nr.	X	Y	Z	Refl.	DEN	Freq.	Lw	l/a	Optime	K0	Dc	Adiv	Aatm	Agr	Afol	Ahous	Abar	Cmet	RL	Lr
	(m)	(m)	(m)			(Hz)	dB(A)	dB	dB	(dB)	(dB)	(dB)	(dB)	(dB)	(dB)	(dB)	(dB)	(dB)	(dB)	dB(A)
186	425584.38	5409336.42	338.65	0	DEN	32	20.2	24.7	0.0	0.0	0.0	80.6	0.1	-5.7	0.0	0.0	4.8	0.0	0.0	-34.8
186	425584.38	5409336.42	338.65	0	DEN	63	38.7	24.7	0.0	0.0	0.0	80.6	0.4	-5.7	0.0	0.0	4.8	0.0	0.0	-16.5
186	425584.38	5409336.42	338.65	0	DEN	125	54.6	24.7	0.0	0.0	0.0	80.6	1.2	2.3	0.0	0.0	2.5	0.0	0.0	-7.3
186	425584.38	5409336.42	338.65	0	DEN	250	59.5	24.7	0.0	0.0	0.0	80.6	3.2	-0.2	0.0	0.0	4.8	0.0	0.0	-4.1
186	425584.38	5409336.42	338.65	0	DEN	500	62.6	24.7	0.0	0.0	0.0	80.6	5.8	-1.6	0.0	0.0	4.8	0.0	0.0	-2.3
186	425584.38	5409336.42	338.65	0	DEN	1000	68.1	24.7	0.0	0.0	0.0	80.6	11.1	-1.6	0.0	0.0	4.8	0.0	0.0	-2.0
186	425584.38	5409336.42	338.65	0	DEN	2000	67.0	24.7	0.0	0.0	0.0	80.6	29.3	-1.6	0.0	0.0	4.8	0.0	0.0	-21.3
186	425584.38	5409336.42	338.65	0	DEN	4000	59.5	24.7	0.0	0.0	0.0	80.6	99.2	-1.6	0.0	0.0	4.8	0.0	0.0	-98.8
186	425584.38	5409336.42	338.65	0	DEN	8000	50.7	24.7	0.0	0.0	0.0	80.6	353.9	-1.6	0.0	0.0	4.8	0.0	0.0	-362.3
200	425299.82	5409344.20	349.02	0	DEN	32	20.2	24.4	0.0	0.0	0.0	81.1	0.1	-5.8	0.0	0.0	4.8	0.0	0.0	-35.6
200	425299.82	5409344.20	349.02	0	DEN	63	38.7	24.4	0.0	0.0	0.0	81.1	0.4	-5.8	0.0	0.0	4.8	0.0	0.0	-17.4
200	425299.82	5409344.20	349.02	0	DEN	125	54.6	24.4	0.0	0.0	0.0	81.1	1.3	4.7	0.0	0.0	0.1	0.0	0.0	-8.2
200	425299.82	5409344.20	349.02	0	DEN	250	59.5	24.4	0.0	0.0	0.0	81.1	3.4	1.4	0.0	0.0	3.4	0.0	0.0	-5.3
200	425299.82	5409344.20	349.02	0	DEN	500	62.6	24.4	0.0	0.0	0.0	81.1	6.2	-0.9	0.0	0.0	4.8	0.0	0.0	-4.2
200	425299.82	5409344.20	349.02	0	DEN	1000	68.1	24.4	0.0	0.0	0.0	81.1	11.8	-0.9	0.0	0.0	4.8	0.0	0.0	-4.2
200	425299.82	5409344.20	349.02	0	DEN	2000	67.0	24.4	0.0	0.0	0.0	81.1	31.1	-0.9	0.0	0.0	4.8	0.0	0.0	-24.7
200	425299.82	5409344.20	349.02	0	DEN	4000	59.5	24.4	0.0	0.0	0.0	81.1	105.4	-0.9	0.0	0.0	4.8	0.0	0.0	-106.5
200	425299.82	5409344.20	349.02	0	DEN	8000	50.7	24.4	0.0	0.0	0.0	81.1	376.0	-0.9	0.0	0.0	4.8	0.0	0.0	-385.8
209	425705.28	5409421.88	317.89	0	DEN	32	20.2	23.6	0.0	0.0	0.0	80.6	0.1	-5.7	0.0	0.0	4.8	0.0	0.0	-35.9
209	425705.28	5409421.88	317.89	0	DEN	63	38.7	23.6	0.0	0.0	0.0	80.6	0.4	-5.7	0.0	0.0	4.8	0.0	0.0	-17.7
209	425705.28	5409421.88	317.89	0	DEN	125	54.6	23.6	0.0	0.0	0.0	80.6	1.2	2.2	0.0	0.0	2.6	0.0	0.0	-8.4
209	425705.28	5409421.88	317.89	0	DEN	250	59.5	23.6	0.0	0.0	0.0	80.6	3.2	-0.3	0.0	0.0	4.9	0.0	0.0	-5.2
209	425705.28	5409421.88	317.89	0	DEN	500	62.6	23.6	0.0	0.0	0.0	80.6	5.8	-1.6	0.0	0.0	4.9	0.0	0.0	-3.5
209	425705.28	5409421.88	317.89	0	DEN	1000	68.1	23.6	0.0	0.0	0.0	80.6	11.1	-1.6	0.0	0.0	5.1	0.0	0.0	-3.4
209	425705.28	5409421.88	317.89	0	DEN	2000	67.0	23.6	0.0	0.0	0.0	80.6	29.2	-1.6	0.0	0.0	5.4	0.0	0.0	-22.9
209	425705.28	5409421.88	317.89	0	DEN	4000	59.5	23.6	0.0	0.0	0.0	80.6	99.1	-1.6	0.0	0.0	5.9	0.0	0.0	-100.8
209	425705.28	5409421.88	317.89	0	DEN	8000	50.7	23.6	0.0	0.0	0.0	80.6	353.5	-1.6	0.0	0.0	6.8	0.0	0.0	-364.9
231	424417.87	5410109.72	360.56	0	DEN	32	20.2	25.8	0.0	0.0	0.0	83.8	0.1	-5.8	0.0	0.0	0.0	0.0	0.0	-32.1
231	424417.87	5410109.72	360.56	0	DEN	63	38.7	25.8	0.0	0.0	0.0	83.8	0.5	-5.8	0.0	0.0	0.0	0.0	0.0	-14.0
231	424417.87	5410109.72	360.56	0	DEN	125	54.6	25.8	0.0	0.0	0.0	83.8	1.8	1.7	0.0	0.0	0.0	0.0	0.0	-6.9
231	424417.87	5410109.72	360.56	0	DEN	250	59.5	25.8	0.0	0.0	0.0	83.8	4.6	-0.7	0.0	0.0	0.0	0.0	0.0	-2.3
231	424417.87	5410109.72	360.56	0	DEN	500	62.6	25.8	0.0	0.0	0.0	83.8	8.4	-2.1	0.0	0.0	0.0	0.0	0.0	-1.7
231	424417.87	5410109.72	360.56	0	DEN	1000	68.1	25.8	0.0	0.0	0.0	83.8	16.0	-2.1	0.0	0.0	0.0	0.0	0.0	-3.8
231	424417.87	5410109.72	360.56	0	DEN	2000	67.0	25.8	0.0	0.0	0.0	83.8	42.3	-2.1	0.0	0.0	0.0	0.0	0.0	-31.2
231	424417.87	5410109.72	360.56	0	DEN	4000	59.5	25.8	0.0	0.0	0.0	83.8	143.5	-2.1	0.0	0.0	0.0	0.0	0.0	-139.8
231	424417.87	5410109.72	360.56	0	DEN	8000	50.7	25.8	0.0	0.0	0.0	83.8	511.7	-2.1	0.0	0.0	0.0	0.0	0.0	-516.8
241	425500.03	5409457.77	299.84	0	DEN	32	20.2	22.8	0.0	0.0	0.0	81.0	0.1	-5.8	0.0	0.0	5.2	0.0	0.0	-37.5
241	425500.03	5409457.77	299.84	0	DEN	63	38.7	22.8	0.0	0.0	0.0	81.0	0.4	-5.8	0.0	0.0	5.5	0.0	0.0	-19.7
241	425500.03	5409457.77	299.84	0	DEN	125	54.6	22.8	0.0	0.0	0.0	81.0	1.3	2.2	0.0	0.0	4.0	0.0	0.0	-11.1
241	425500.03	5409457.77	299.84	0	DEN	250	59.5	22.8	0.0	0.0	0.0	81.0	3.3	-0.3	0.0	0.0	7.2	0.0	0.0	-9.0
241	425500.03	5409457.77	299.84	0	DEN	500	62.6	22.8	0.0	0.0	0.0	81.0	6.1	-1.7	0.0	0.0	8.8	0.0	0.0	-8.8
241	425500.03	5409457.77	299.84	0	DEN	1000	68.1	22.8	0.0	0.0	0.0	81.0	11.6	-1.7	0.0	0.0	10.9	0.0	0.0	-10.9
241	425500.03	5409457.77	299.84	0	DEN	2000	67.0	22.8	0.0	0.0	0.0	81.0	30.7	-1.7	0.0	0.0	13.3	0.0	0.0	-33.5
241	425500.03	5409457.77	299.84	0	DEN	4000	59.5	22.8	0.0	0.0	0.0	81.0	104.1	-1.7	0.0	0.0	16.0	0.0	0.0	-117.1
241	425500.03	5409457.77	299.84	0	DEN	8000	50.7	22.8	0.0	0.0	0.0	81.0	371.2	-1.7	0.0	0.0	18.9	0.0	0.0	-395.8
242	424642.89	5409858.56	354.60	0	DEN	32	20.2	24.8	0.0	0.0	0.0	83.1	0.1	-5.8	0.0	0.0	4.8	0.0	0.0	-37.2
242	424642.89	5409858.56	354.60	0	DEN	63	38.7	24.8	0.0	0.0	0.0	83.1	0.5	-5.8	0.0	0.0	4.8	0.0	0.0	-19.1
242	424642.89	5409858.56	354.60	0	DEN	125	54.6	24.8	0.0	0.0	0.0	83.1	1.7	2.0	0.0	0.0	2.7	0.0	0.0	-10.1
242	424642.89	5409858.56	354.60	0	DEN	250	59.5	24.8	0.0	0.0	0.0	83.1	4.2	-0.5	0.0	0.0	4.8	0.0	0.0	-7.3
242	424642.89	5409858.56	354.60	0	DEN	500	62.6	24.8	0.0	0.0	0.0	83.1	7.8	-1.9	0.0	0.0	4.8	0.0	0.0	-6.4
242	424642.89	5409858.56	354.60	0	DEN	1000	68.1	24.8	0.0	0.0	0.0	83.1	14.8	-1.9	0.0	0.0	4.8	0.0	0.0	-7.9

Line Source, ISO 9613, Name: "WTR_NPAG", ID: ""																					
Nr.	X	Y	Z	Refl.	DEN	Freq.	Lw	l/a	Optime	K0	Dc	Adiv	Aatm	Agr	Afol	Ahous	Abar	Cmet	RL	Lr
	(m)	(m)	(m)			(Hz)	dB(A)	dB	dB	(dB)	(dB)	(dB)	(dB)	(dB)	(dB)	(dB)	(dB)	(dB)	(dB)	dB(A)
242	424642.89	5409858.56	354.60	0	DEN	2000	67.0	24.8	0.0	0.0	0.0	83.1	39.0	-1.9	0.0	0.0	4.8	0.0	0.0	-33.2
242	424642.89	5409858.56	354.60	0	DEN	4000	59.5	24.8	0.0	0.0	0.0	83.1	132.4	-1.9	0.0	0.0	4.8	0.0	0.0	-134.1
242	424642.89	5409858.56	354.60	0	DEN	8000	50.7	24.8	0.0	0.0	0.0	83.1	472.3	-1.9	0.0	0.0	4.8	0.0	0.0	-482.8
252	424815.74	5409646.59	350.53	0	DEN	32	20.2	24.0	0.0	0.0	0.0	82.5	0.1	-5.8	0.0	0.0	4.8	0.0	0.0	-37.4
252	424815.74	5409646.59	350.53	0	DEN	63	38.7	24.0	0.0	0.0	0.0	82.5	0.5	-5.8	0.0	0.0	4.8	0.0	0.0	-19.2
252	424815.74	5409646.59	350.53	0	DEN	125	54.6	24.0	0.0	0.0	0.0	82.5	1.5	2.1	0.0	0.0	2.7	0.0	0.0	-10.2
252	424815.74	5409646.59	350.53	0	DEN	250	59.5	24.0	0.0	0.0	0.0	82.5	3.9	-0.3	0.0	0.0	4.8	0.0	0.0	-7.4
252	424815.74	5409646.59	350.53	0	DEN	500	62.6	24.0	0.0	0.0	0.0	82.5	7.3	-1.7	0.0	0.0	4.8	0.0	0.0	-6.2
252	424815.74	5409646.59	350.53	0	DEN	1000	68.1	24.0	0.0	0.0	0.0	82.5	13.8	-1.7	0.0	0.0	4.8	0.0	0.0	-7.2
252	424815.74	5409646.59	350.53	0	DEN	2000	67.0	24.0	0.0	0.0	0.0	82.5	36.4	-1.7	0.0	0.0	4.8	0.0	0.0	-31.0
252	424815.74	5409646.59	350.53	0	DEN	4000	59.5	24.0	0.0	0.0	0.0	82.5	123.5	-1.7	0.0	0.0	4.8	0.0	0.0	-125.5
252	424815.74	5409646.59	350.53	0	DEN	8000	50.7	24.0	0.0	0.0	0.0	82.5	440.4	-1.7	0.0	0.0	4.8	0.0	0.0	-451.3
276	424036.85	5410283.13	364.00	0	DEN	32	20.2	25.5	0.0	0.0	0.0	84.6	0.2	-5.8	0.0	0.0	0.0	0.0	0.0	-33.1
276	424036.85	5410283.13	364.00	0	DEN	63	38.7	25.5	0.0	0.0	0.0	84.6	0.6	-5.8	0.0	0.0	0.0	0.0	0.0	-15.1
276	424036.85	5410283.13	364.00	0	DEN	125	54.6	25.5	0.0	0.0	0.0	84.6	2.0	2.1	0.0	0.0	0.0	0.0	0.0	-8.5
276	424036.85	5410283.13	364.00	0	DEN	250	59.5	25.5	0.0	0.0	0.0	84.6	5.0	-0.4	0.0	0.0	0.0	0.0	0.0	-4.1
276	424036.85	5410283.13	364.00	0	DEN	500	62.6	25.5	0.0	0.0	0.0	84.6	9.2	-1.8	0.0	0.0	0.0	0.0	0.0	-3.9
276	424036.85	5410283.13	364.00	0	DEN	1000	68.1	25.5	0.0	0.0	0.0	84.6	17.4	-1.8	0.0	0.0	0.0	0.0	0.0	-6.6
276	424036.85	5410283.13	364.00	0	DEN	2000	67.0	25.5	0.0	0.0	0.0	84.6	46.1	-1.8	0.0	0.0	0.0	0.0	0.0	-36.4
276	424036.85	5410283.13	364.00	0	DEN	4000	59.5	25.5	0.0	0.0	0.0	84.6	156.3	-1.8	0.0	0.0	0.0	0.0	0.0	-154.1
276	424036.85	5410283.13	364.00	0	DEN	8000	50.7	25.5	0.0	0.0	0.0	84.6	557.4	-1.8	0.0	0.0	0.0	0.0	0.0	-564.0
313	424973.04	5409499.81	349.00	0	DEN	32	20.2	22.6	0.0	0.0	0.0	82.0	0.1	-5.8	0.0	0.0	4.8	0.0	0.0	-38.3
313	424973.04	5409499.81	349.00	0	DEN	63	38.7	22.6	0.0	0.0	0.0	82.0	0.4	-5.8	0.0	0.0	4.8	0.0	0.0	-20.1
313	424973.04	5409499.81	349.00	0	DEN	125	54.6	22.6	0.0	0.0	0.0	82.0	1.5	2.3	0.0	0.0	2.5	0.0	0.0	-11.0
313	424973.04	5409499.81	349.00	0	DEN	250	59.5	22.6	0.0	0.0	0.0	82.0	3.7	-0.2	0.0	0.0	4.8	0.0	0.0	-8.2
313	424973.04	5409499.81	349.00	0	DEN	500	62.6	22.6	0.0	0.0	0.0	82.0	6.9	-1.6	0.0	0.0	4.8	0.0	0.0	-6.8
313	424973.04	5409499.81	349.00	0	DEN	1000	68.1	22.6	0.0	0.0	0.0	82.0	13.0	-1.6	0.0	0.0	4.8	0.0	0.0	-7.5
313	424973.04	5409499.81	349.00	0	DEN	2000	67.0	22.6	0.0	0.0	0.0	82.0	34.3	-1.6	0.0	0.0	4.8	0.0	0.0	-29.9
313	424973.04	5409499.81	349.00	0	DEN	4000	59.5	22.6	0.0	0.0	0.0	82.0	116.4	-1.6	0.0	0.0	4.8	0.0	0.0	-119.5
313	424973.04	5409499.81	349.00	0	DEN	8000	50.7	22.6	0.0	0.0	0.0	82.0	415.3	-1.6	0.0	0.0	4.8	0.0	0.0	-427.2
330	423606.00	5410411.07	364.00	0	DEN	32	20.2	25.3	0.0	0.0	0.0	85.3	0.2	-5.9	0.0	0.0	0.0	0.0	0.0	-34.0
330	423606.00	5410411.07	364.00	0	DEN	63	38.7	25.3	0.0	0.0	0.0	85.3	0.6	-5.9	0.0	0.0	0.0	0.0	0.0	-16.0
330	423606.00	5410411.07	364.00	0	DEN	125	54.6	25.3	0.0	0.0	0.0	85.3	2.1	1.9	0.0	0.0	0.0	0.0	0.0	-9.4
330	423606.00	5410411.07	364.00	0	DEN	250	59.5	25.3	0.0	0.0	0.0	85.3	5.4	-0.5	0.0	0.0	0.0	0.0	0.0	-5.3
330	423606.00	5410411.07	364.00	0	DEN	500	62.6	25.3	0.0	0.0	0.0	85.3	10.0	-1.9	0.0	0.0	0.0	0.0	0.0	-5.4
330	423606.00	5410411.07	364.00	0	DEN	1000	68.1	25.3	0.0	0.0	0.0	85.3	18.9	-1.9	0.0	0.0	0.0	0.0	0.0	-8.8
330	423606.00	5410411.07	364.00	0	DEN	2000	67.0	25.3	0.0	0.0	0.0	85.3	50.0	-1.9	0.0	0.0	0.0	0.0	0.0	-41.0
330	423606.00	5410411.07	364.00	0	DEN	4000	59.5	25.3	0.0	0.0	0.0	85.3	169.5	-1.9	0.0	0.0	0.0	0.0	0.0	-168.0
330	423606.00	5410411.07	364.00	0	DEN	8000	50.7	25.3	0.0	0.0	0.0	85.3	604.4	-1.9	0.0	0.0	0.0	0.0	0.0	-611.8
337	425102.15	5409403.92	349.02	0	DEN	32	20.2	21.5	0.0	0.0	0.0	81.6	0.1	-5.8	0.0	0.0	4.8	0.0	0.0	-39.0
337	425102.15	5409403.92	349.02	0	DEN	63	38.7	21.5	0.0	0.0	0.0	81.6	0.4	-5.8	0.0	0.0	4.8	0.0	0.0	-20.8
337	425102.15	5409403.92	349.02	0	DEN	125	54.6	21.5	0.0	0.0	0.0	81.6	1.4	2.9	0.0	0.0	1.9	0.0	0.0	-11.6
337	425102.15	5409403.92	349.02	0	DEN	250	59.5	21.5	0.0	0.0	0.0	81.6	3.5	0.2	0.0	0.0	4.5	0.0	0.0	-8.9
337	425102.15	5409403.92	349.02	0	DEN	500	62.6	21.5	0.0	0.0	0.0	81.6	6.5	-1.3	0.0	0.0	4.8	0.0	0.0	-7.4
337	425102.15	5409403.92	349.02	0	DEN	1000	68.1	21.5	0.0	0.0	0.0	81.6	12.4	-1.3	0.0	0.0	4.8	0.0	0.0	-7.8
337	425102.15	5409403.92	349.02	0	DEN	2000	67.0	21.5	0.0	0.0	0.0	81.6	32.8	-1.3	0.0	0.0	4.8	0.0	0.0	-29.3
337	425102.15	5409403.92	349.02	0	DEN	4000	59.5	21.5	0.0	0.0	0.0	81.6	111.2	-1.3	0.0	0.0	4.8	0.0	0.0	-115.2
337	425102.15	5409403.92	349.02	0	DEN	8000	50.7	21.5	0.0	0.0	0.0	81.6	396.8	-1.3	0.0	0.0	4.8	0.0	0.0	-409.6
346	425777.04	5409373.77	328.24	0	DEN	32	20.2	20.0	0.0	0.0	0.0	80.4	0.1	-5.7	0.0	0.0	4.8	0.0	0.0	-39.3
346	425777.04	5409373.77	328.24	0	DEN	63	38.7	20.0	0.0	0.0	0.0	80.4	0.4	-5.7	0.0	0.0	4.8	0.0	0.0	-21.1
346	425777.04	5409373.77	328.24	0	DEN	125	54.6	20.0	0.0	0.0	0.0	80.4	1.2	2.3	0.0	0.0	2.5	0.0	0.0	-11.8
346	425777.04	5409373.77	328.24	0	DEN	250	59.5	20.0	0.0	0.0	0.0	80.4	3.1	-0.2	0.0	0.0	4.8	0.0	0.0	-8.6
346	425777.04	5409373.77	328.24	0	DEN	500	62.6	20.0	0.0	0.0	0.0	80.4	5.7	-1.6	0.0	0.0	4.9	0.0	0.0	-6.8
346	425777.04	5409373.77	328.24	0	DEN	1000	68.1	20.0	0.0	0.0	0.0	80.4	10.8	-1.6	0.0	0.0	5.1	0.0	0.0	-6.5
346	425777.04	5409373.77	328.24	0	DEN	2000	67.0	20.0	0.0	0.0	0.0	80.4	28.4	-1.6	0.0	0.0	5.3	0.0	0.0	-25.6
346	425777.04	5409373.77	328.24	0	DEN	4000	59.5	20.0	0.0	0.0	0.0	80.4	96.5	-1.6	0.0	0.0	5.8	0.0	0.0	-101.6
346	425777.04	5409373.77	328.24	0	DEN	8000	50.7	20.0	0.0	0.0	0.0	80.4	344.1	-1.6	0.0	0.0	6.7	0.0	0.0	-358.8
434	423795.93	5410301.42	364.00	0	DEN	32	20.2	21.2	0.0	0.0	0.0	84.9	0.2	-5.8	0.0	0.0	0.0	0.0	0.0	-37.8
434	423795.93	5410301.42	364.00	0	DEN	63	38.7	21.2	0.0	0.0	0.0	84.9	0.6	-5.8	0.0	0.0	0.0	0.0	0.0	-19.8
434	423795.93	5410301.42	364.00	0	DEN	125	54.6	21.2	0.0	0.0	0.0	84.9	2.0	2.1	0.0	0.0	0.0	0.0	0.0	-13.2
434	423795.93	5410301.42	364.00	0	DEN	250	59.5	21.2	0.0	0.0	0.0	84.9	5.2	-0.4	0.0	0.0	0.0	0.0	0.0	-9.0
434	423795.93	5410301.42	364.00	0	DEN	500	62.6	21.2	0.0	0.0	0.0	84.9	9.6	-1.8	0.0	0.0	0.0	0.0	0.0	-8.9
434	423795.93	5410301.42	364.00	0	DEN	1000	68.1	21.2	0.0	0.0	0.0	84.9	18.1	-1.8	0.0	0.0	0.0	0.0	0.0	-11.9

Line Source, ISO 9613, Name: "WTR_NPAG", ID: ""																				
Nr.	X	Y	Z	Refl.	DEN	Freq.	Lw	l/a	Optime	K0	Dc	Adiv	Aatm	Agr	Afol	Ahous	Abar	Cmet	RL	Lr
	(m)	(m)	(m)			(Hz)	dB(A)	dB	dB	(dB)	(dB)	(dB)	(dB)	(dB)	(dB)	(dB)	(dB)	(dB)	(dB)	dB(A)
434	423795.93	5410301.42	364.00	0	DEN	2000	67.0	21.2	0.0	0.0	0.0	84.9	47.9	-1.8	0.0	0.0	0.0	0.0	0.0	-42.8
434	423795.93	5410301.42	364.00	0	DEN	4000	59.5	21.2	0.0	0.0	0.0	84.9	162.4	-1.8	0.0	0.0	0.0	0.0	0.0	-164.9
434	423795.93	5410301.42	364.00	0	DEN	8000	50.7	21.2	0.0	0.0	0.0	84.9	579.4	-1.8	0.0	0.0	0.0	0.0	0.0	-590.6
494	424244.57	5410248.06	364.00	0	DEN	32	20.2	18.3	0.0	0.0	0.0	84.3	0.1	-5.8	0.0	0.0	0.0	0.0	0.0	-40.0
494	424244.57	5410248.06	364.00	0	DEN	63	38.7	18.3	0.0	0.0	0.0	84.3	0.6	-5.8	0.0	0.0	0.0	0.0	0.0	-21.9
494	424244.57	5410248.06	364.00	0	DEN	125	54.6	18.3	0.0	0.0	0.0	84.3	1.9	1.6	0.0	0.0	0.0	0.0	0.0	-14.8
494	424244.57	5410248.06	364.00	0	DEN	250	59.5	18.3	0.0	0.0	0.0	84.3	4.8	-0.9	0.0	0.0	0.0	0.0	0.0	-10.3
494	424244.57	5410248.06	364.00	0	DEN	500	62.6	18.3	0.0	0.0	0.0	84.3	8.9	-2.2	0.0	0.0	0.0	0.0	0.0	-9.9
494	424244.57	5410248.06	364.00	0	DEN	1000	68.1	18.3	0.0	0.0	0.0	84.3	16.8	-2.2	0.0	0.0	0.0	0.0	0.0	-12.4
494	424244.57	5410248.06	364.00	0	DEN	2000	67.0	18.3	0.0	0.0	0.0	84.3	44.4	-2.2	0.0	0.0	0.0	0.0	0.0	-41.1
494	424244.57	5410248.06	364.00	0	DEN	4000	59.5	18.3	0.0	0.0	0.0	84.3	150.7	-2.2	0.0	0.0	0.0	0.0	0.0	-154.8
494	424244.57	5410248.06	364.00	0	DEN	8000	50.7	18.3	0.0	0.0	0.0	84.3	537.4	-2.2	0.0	0.0	0.0	0.0	0.0	-550.3
519	425820.22	5409402.51	327.37	0	DEN	32	20.2	11.5	0.0	0.0	0.0	80.4	0.1	-5.7	0.0	0.0	4.8	0.0	0.0	-47.8
519	425820.22	5409402.51	327.37	0	DEN	63	38.7	11.5	0.0	0.0	0.0	80.4	0.4	-5.7	0.0	0.0	4.8	0.0	0.0	-29.6
519	425820.22	5409402.51	327.37	0	DEN	125	54.6	11.5	0.0	0.0	0.0	80.4	1.2	2.2	0.0	0.0	2.6	0.0	0.0	-20.3
519	425820.22	5409402.51	327.37	0	DEN	250	59.5	11.5	0.0	0.0	0.0	80.4	3.1	-0.2	0.0	0.0	4.8	0.0	0.0	-17.0
519	425820.22	5409402.51	327.37	0	DEN	500	62.6	11.5	0.0	0.0	0.0	80.4	5.7	-1.6	0.0	0.0	4.8	0.0	0.0	-15.1
519	425820.22	5409402.51	327.37	0	DEN	1000	68.1	11.5	0.0	0.0	0.0	80.4	10.8	-1.6	0.0	0.0	4.8	0.0	0.0	-14.7
519	425820.22	5409402.51	327.37	0	DEN	2000	67.0	11.5	0.0	0.0	0.0	80.4	28.4	-1.6	0.0	0.0	4.8	0.0	0.0	-33.5
519	425820.22	5409402.51	327.37	0	DEN	4000	59.5	11.5	0.0	0.0	0.0	80.4	96.4	-1.6	0.0	0.0	4.9	0.0	0.0	-109.1
519	425820.22	5409402.51	327.37	0	DEN	8000	50.7	11.5	0.0	0.0	0.0	80.4	344.0	-1.6	0.0	0.0	5.0	0.0	0.0	-365.6

Line Source, ISO 9613, Name: "WTR_OB", ID: ""																				
Nr.	X	Y	Z	Refl.	DEN	Freq.	Lw	l/a	Optime	K0	Dc	Adiv	Aatm	Agr	Afol	Ahous	Abar	Cmet	RL	Lr
	(m)	(m)	(m)			(Hz)	dB(A)	dB	dB	(dB)	(dB)	(dB)	(dB)	(dB)	(dB)	(dB)	(dB)	(dB)	(dB)	dB(A)
180	424882.86	5409587.72	350.54	0	DEN	32	20.2	26.3	0.0	0.0	0.0	82.3	0.1	-5.8	0.0	0.0	4.8	0.0	0.0	-34.8
180	424882.86	5409587.72	350.54	0	DEN	63	38.7	26.3	0.0	0.0	0.0	82.3	0.4	-5.8	0.0	0.0	4.8	0.0	0.0	-16.7
180	424882.86	5409587.72	350.54	0	DEN	125	54.6	26.3	0.0	0.0	0.0	82.3	1.5	2.2	0.0	0.0	2.6	0.0	0.0	-7.6
180	424882.86	5409587.72	350.54	0	DEN	250	59.5	26.3	0.0	0.0	0.0	82.3	3.8	-0.3	0.0	0.0	4.8	0.0	0.0	-4.8
180	424882.86	5409587.72	350.54	0	DEN	500	62.6	26.3	0.0	0.0	0.0	82.3	7.1	-1.7	0.0	0.0	4.8	0.0	0.0	-3.5
180	424882.86	5409587.72	350.54	0	DEN	1000	68.1	26.3	0.0	0.0	0.0	82.3	13.5	-1.7	0.0	0.0	4.8	0.0	0.0	-4.4
180	424882.86	5409587.72	350.54	0	DEN	2000	67.0	26.3	0.0	0.0	0.0	82.3	35.6	-1.7	0.0	0.0	4.8	0.0	0.0	-27.6
180	424882.86	5409587.72	350.54	0	DEN	4000	59.5	26.3	0.0	0.0	0.0	82.3	120.6	-1.7	0.0	0.0	4.8	0.0	0.0	-120.1
180	424882.86	5409587.72	350.54	0	DEN	8000	50.7	26.3	0.0	0.0	0.0	82.3	430.0	-1.7	0.0	0.0	4.8	0.0	0.0	-438.4
187	425584.45	5409336.16	338.66	0	DEN	32	20.2	24.7	0.0	0.0	0.0	80.6	0.1	-5.7	0.0	0.0	4.8	0.0	0.0	-34.8
187	425584.45	5409336.16	338.66	0	DEN	63	38.7	24.7	0.0	0.0	0.0	80.6	0.4	-5.7	0.0	0.0	4.8	0.0	0.0	-16.6
187	425584.45	5409336.16	338.66	0	DEN	125	54.6	24.7	0.0	0.0	0.0	80.6	1.2	2.3	0.0	0.0	2.5	0.0	0.0	-7.3
187	425584.45	5409336.16	338.66	0	DEN	250	59.5	24.7	0.0	0.0	0.0	80.6	3.2	-0.2	0.0	0.0	4.8	0.0	0.0	-4.1
187	425584.45	5409336.16	338.66	0	DEN	500	62.6	24.7	0.0	0.0	0.0	80.6	5.8	-1.6	0.0	0.0	4.8	0.0	0.0	-2.3
187	425584.45	5409336.16	338.66	0	DEN	1000	68.1	24.7	0.0	0.0	0.0	80.6	11.1	-1.6	0.0	0.0	4.8	0.0	0.0	-2.0
187	425584.45	5409336.16	338.66	0	DEN	2000	67.0	24.7	0.0	0.0	0.0	80.6	29.3	-1.6	0.0	0.0	4.8	0.0	0.0	-21.3
187	425584.45	5409336.16	338.66	0	DEN	4000	59.5	24.7	0.0	0.0	0.0	80.6	99.2	-1.6	0.0	0.0	4.8	0.0	0.0	-98.8
187	425584.45	5409336.16	338.66	0	DEN	8000	50.7	24.7	0.0	0.0	0.0	80.6	353.8	-1.6	0.0	0.0	4.8	0.0	0.0	-362.3
191	424344.42	5410176.96	360.56	0	DEN	32	20.2	27.6	0.0	0.0	0.0	84.0	0.1	-5.8	0.0	0.0	0.0	0.0	0.0	-30.5
191	424344.42	5410176.96	360.56	0	DEN	63	38.7	27.6	0.0	0.0	0.0	84.0	0.5	-5.8	0.0	0.0	0.0	0.0	0.0	-12.4
191	424344.42	5410176.96	360.56	0	DEN	125	54.6	27.6	0.0	0.0	0.0	84.0	1.8	1.7	0.0	0.0	0.0	0.0	0.0	-5.2
191	424344.42	5410176.96	360.56	0	DEN	250	59.5	27.6	0.0	0.0	0.0	84.0	4.7	-0.8	0.0	0.0	0.0	0.0	0.0	-0.7
191	424344.42	5410176.96	360.56	0	DEN	500	62.6	27.6	0.0	0.0	0.0	84.0	8.6	-2.2	0.0	0.0	0.0	0.0	0.0	-0.2
191	424344.42	5410176.96	360.56	0	DEN	1000	68.1	27.6	0.0	0.0	0.0	84.0	16.4	-2.2	0.0	0.0	0.0	0.0	0.0	-2.4
191	424344.42	5410176.96	360.56	0	DEN	2000	67.0	27.6	0.0	0.0	0.0	84.0	43.3	-2.2	0.0	0.0	0.0	0.0	0.0	-30.4
191	424344.42	5410176.96	360.56	0	DEN	4000	59.5	27.6	0.0	0.0	0.0	84.0	146.7	-2.2	0.0	0.0	0.0	0.0	0.0	-141.4
191	424344.42	5410176.96	360.56	0	DEN	8000	50.7	27.6	0.0	0.0	0.0	84.0	523.3	-2.2	0.0	0.0	0.0	0.0	0.0	-526.8
199	425299.74	5409343.89	349.02	0	DEN	32	20.2	24.5	0.0	0.0	0.0	81.1	0.1	-5.8	0.0	0.0	4.8	0.0	0.0	-35.6
199	425299.74	5409343.89	349.02	0	DEN	63	38.7	24.5	0.0	0.0	0.0	81.1	0.4	-5.8	0.0	0.0	4.8	0.0	0.0	-17.3
199	425299.74	5409343.89	349.02	0	DEN	125	54.6	24.5	0.0	0.0	0.0	81.1	1.3	4.7	0.0	0.0	0.1	0.0	0.0	-8.1
199	425299.74	5409343.89	349.02	0	DEN	250	59.5	24.5	0.0	0.0	0.0	81.1	3.4	1.4	0.0	0.0	3.4	0.0	0.0	-5.3
199	425299.74	5409343.89	349.02	0	DEN	500	62.6	24.5	0.0	0.0	0.0	81.1	6.2	-0.9	0.0	0.0	4.8	0.0	0.0	-4.2
199	425299.74	5409343.89	349.02	0	DEN	1000	68.1	24.5	0.0	0.0	0.0	81.1	11.8	-0.9	0.0	0.0	4.8	0.0	0.0	-4.2
199	425299.74	5409343.89	349.02	0	DEN	2000	67.0	24.5	0.0	0.0	0.0	81.1	31.1	-0.9	0.0	0.0	4.8	0.0	0.0	-24.6
199	425299.74	5409343.89	349.02	0	DEN	4000	59.5	24.5	0.0	0.0	0.0	81.1	105.4	-0.9	0.0	0.0	4.8	0.0	0.0	-106.5
199	425299.74	5409343.89	349.02	0	DEN	8000	50.7	24.5	0.0	0.0	0.0	81.1	375.9	-0.9	0.0	0.0	4.8	0.0	0.0	-385.8
210	425705.23	5409422.07	317.83	0	DEN	32	20.2	23.6	0.0	0.0	0.0	80.6	0.1	-5.7	0.0	0.0	4.8	0.0	0.0	-35.9
210	425705.23	5409422.07	317.83	0	DEN	63	38.7	23.6	0.0	0.0	0.0	80.6	0.4	-5.7	0.0	0.0	4.8	0.0	0.0	-17.7

Line Source, ISO 9613, Name: "WTR_OB", ID: ""																					
Nr.	X	Y	Z	Refl.	DEN	Freq.	Lw	l/a	Optime	K0	Dc	Adiv	Aatm	Agr	Afol	Ahous	Abar	Cmet	RL	Lr
	(m)	(m)	(m)			(Hz)	dB(A)	dB	dB	(dB)	(dB)	(dB)	(dB)	(dB)	(dB)	(dB)	(dB)	(dB)	(dB)	dB(A)
210	425705.23	5409422.07	317.83	0	DEN	125	54.6	23.6	0.0	0.0	0.0	80.6	1.2	2.2	0.0	0.0	2.6	0.0	0.0	-8.4
210	425705.23	5409422.07	317.83	0	DEN	250	59.5	23.6	0.0	0.0	0.0	80.6	3.2	-0.3	0.0	0.0	4.9	0.0	0.0	-5.2
210	425705.23	5409422.07	317.83	0	DEN	500	62.6	23.6	0.0	0.0	0.0	80.6	5.8	-1.6	0.0	0.0	4.9	0.0	0.0	-3.5
210	425705.23	5409422.07	317.83	0	DEN	1000	68.1	23.6	0.0	0.0	0.0	80.6	11.1	-1.6	0.0	0.0	5.1	0.0	0.0	-3.4
210	425705.23	5409422.07	317.83	0	DEN	2000	67.0	23.6	0.0	0.0	0.0	80.6	29.2	-1.6	0.0	0.0	5.4	0.0	0.0	-23.0
210	425705.23	5409422.07	317.83	0	DEN	4000	59.5	23.6	0.0	0.0	0.0	80.6	99.1	-1.6	0.0	0.0	5.9	0.0	0.0	-100.9
210	425705.23	5409422.07	317.83	0	DEN	8000	50.7	23.6	0.0	0.0	0.0	80.6	353.5	-1.6	0.0	0.0	6.8	0.0	0.0	-365.0
238	425499.98	5409457.87	299.87	0	DEN	32	20.2	22.8	0.0	0.0	0.0	81.0	0.1	-5.8	0.0	0.0	5.2	0.0	0.0	-37.5
238	425499.98	5409457.87	299.87	0	DEN	63	38.7	22.8	0.0	0.0	0.0	81.0	0.4	-5.8	0.0	0.0	5.5	0.0	0.0	-19.6
238	425499.98	5409457.87	299.87	0	DEN	125	54.6	22.8	0.0	0.0	0.0	81.0	1.3	2.2	0.0	0.0	4.0	0.0	0.0	-11.1
238	425499.98	5409457.87	299.87	0	DEN	250	59.5	22.8	0.0	0.0	0.0	81.0	3.3	-0.3	0.0	0.0	7.2	0.0	0.0	-8.9
238	425499.98	5409457.87	299.87	0	DEN	500	62.6	22.8	0.0	0.0	0.0	81.0	6.1	-1.7	0.0	0.0	8.8	0.0	0.0	-8.8
238	425499.98	5409457.87	299.87	0	DEN	1000	68.1	22.8	0.0	0.0	0.0	81.0	11.6	-1.7	0.0	0.0	10.8	0.0	0.0	-10.8
238	425499.98	5409457.87	299.87	0	DEN	2000	67.0	22.8	0.0	0.0	0.0	81.0	30.7	-1.7	0.0	0.0	13.3	0.0	0.0	-33.4
238	425499.98	5409457.87	299.87	0	DEN	4000	59.5	22.8	0.0	0.0	0.0	81.0	104.1	-1.7	0.0	0.0	16.0	0.0	0.0	-117.0
238	425499.98	5409457.87	299.87	0	DEN	8000	50.7	22.8	0.0	0.0	0.0	81.0	371.2	-1.7	0.0	0.0	18.8	0.0	0.0	-395.8
244	424642.58	5409858.65	354.60	0	DEN	32	20.2	24.8	0.0	0.0	0.0	83.1	0.1	-5.8	0.0	0.0	4.8	0.0	0.0	-37.2
244	424642.58	5409858.65	354.60	0	DEN	63	38.7	24.8	0.0	0.0	0.0	83.1	0.5	-5.8	0.0	0.0	4.8	0.0	0.0	-19.1
244	424642.58	5409858.65	354.60	0	DEN	125	54.6	24.8	0.0	0.0	0.0	83.1	1.7	2.0	0.0	0.0	2.7	0.0	0.0	-10.2
244	424642.58	5409858.65	354.60	0	DEN	250	59.5	24.8	0.0	0.0	0.0	83.1	4.2	-0.5	0.0	0.0	4.8	0.0	0.0	-7.4
244	424642.58	5409858.65	354.60	0	DEN	500	62.6	24.8	0.0	0.0	0.0	83.1	7.8	-1.9	0.0	0.0	4.8	0.0	0.0	-6.4
244	424642.58	5409858.65	354.60	0	DEN	1000	68.1	24.8	0.0	0.0	0.0	83.1	14.8	-1.9	0.0	0.0	4.8	0.0	0.0	-7.9
244	424642.58	5409858.65	354.60	0	DEN	2000	67.0	24.8	0.0	0.0	0.0	83.1	39.1	-1.9	0.0	0.0	4.8	0.0	0.0	-33.2
244	424642.58	5409858.65	354.60	0	DEN	4000	59.5	24.8	0.0	0.0	0.0	83.1	132.4	-1.9	0.0	0.0	4.8	0.0	0.0	-134.1
244	424642.58	5409858.65	354.60	0	DEN	8000	50.7	24.8	0.0	0.0	0.0	83.1	472.3	-1.9	0.0	0.0	4.8	0.0	0.0	-482.8
336	425100.99	5409404.00	349.02	0	DEN	32	20.2	21.5	0.0	0.0	0.0	81.6	0.1	-5.8	0.0	0.0	4.8	0.0	0.0	-38.9
336	425100.99	5409404.00	349.02	0	DEN	63	38.7	21.5	0.0	0.0	0.0	81.6	0.4	-5.8	0.0	0.0	4.8	0.0	0.0	-20.7
336	425100.99	5409404.00	349.02	0	DEN	125	54.6	21.5	0.0	0.0	0.0	81.6	1.4	3.0	0.0	0.0	1.8	0.0	0.0	-11.6
336	425100.99	5409404.00	349.02	0	DEN	250	59.5	21.5	0.0	0.0	0.0	81.6	3.5	0.3	0.0	0.0	4.4	0.0	0.0	-8.8
336	425100.99	5409404.00	349.02	0	DEN	500	62.6	21.5	0.0	0.0	0.0	81.6	6.5	-1.3	0.0	0.0	4.8	0.0	0.0	-7.4
336	425100.99	5409404.00	349.02	0	DEN	1000	68.1	21.5	0.0	0.0	0.0	81.6	12.4	-1.3	0.0	0.0	4.8	0.0	0.0	-7.8
336	425100.99	5409404.00	349.02	0	DEN	2000	67.0	21.5	0.0	0.0	0.0	81.6	32.8	-1.3	0.0	0.0	4.8	0.0	0.0	-29.3
336	425100.99	5409404.00	349.02	0	DEN	4000	59.5	21.5	0.0	0.0	0.0	81.6	111.3	-1.3	0.0	0.0	4.8	0.0	0.0	-115.3
336	425100.99	5409404.00	349.02	0	DEN	8000	50.7	21.5	0.0	0.0	0.0	81.6	396.9	-1.3	0.0	0.0	4.8	0.0	0.0	-409.7
342	425776.63	5409373.74	328.24	0	DEN	32	20.2	20.0	0.0	0.0	0.0	80.4	0.1	-5.7	0.0	0.0	4.8	0.0	0.0	-39.2
342	425776.63	5409373.74	328.24	0	DEN	63	38.7	20.0	0.0	0.0	0.0	80.4	0.4	-5.7	0.0	0.0	4.8	0.0	0.0	-21.0
342	425776.63	5409373.74	328.24	0	DEN	125	54.6	20.0	0.0	0.0	0.0	80.4	1.2	2.3	0.0	0.0	2.5	0.0	0.0	-11.7
342	425776.63	5409373.74	328.24	0	DEN	250	59.5	20.0	0.0	0.0	0.0	80.4	3.1	-0.2	0.0	0.0	4.8	0.0	0.0	-8.6
342	425776.63	5409373.74	328.24	0	DEN	500	62.6	20.0	0.0	0.0	0.0	80.4	5.7	-1.6	0.0	0.0	4.9	0.0	0.0	-6.7
342	425776.63	5409373.74	328.24	0	DEN	1000	68.1	20.0	0.0	0.0	0.0	80.4	10.8	-1.6	0.0	0.0	5.1	0.0	0.0	-6.5
342	425776.63	5409373.74	328.24	0	DEN	2000	67.0	20.0	0.0	0.0	0.0	80.4	28.4	-1.6	0.0	0.0	5.3	0.0	0.0	-25.5
342	425776.63	5409373.74	328.24	0	DEN	4000	59.5	20.0	0.0	0.0	0.0	80.4	96.5	-1.6	0.0	0.0	5.8	0.0	0.0	-101.5
342	425776.63	5409373.74	328.24	0	DEN	8000	50.7	20.0	0.0	0.0	0.0	80.4	344.1	-1.6	0.0	0.0	6.7	0.0	0.0	-358.8
365	424083.09	5410477.06	364.00	0	DEN	32	20.2	23.6	0.0	0.0	0.0	84.8	0.2	-5.8	0.0	0.0	0.0	0.0	0.0	-35.2
365	424083.09	5410477.06	364.00	0	DEN	63	38.7	23.6	0.0	0.0	0.0	84.8	0.6	-5.8	0.0	0.0	0.0	0.0	0.0	-17.1
365	424083.09	5410477.06	364.00	0	DEN	125	54.6	23.6	0.0	0.0	0.0	84.8	2.0	1.4	0.0	0.0	0.0	0.0	0.0	-9.9
365	424083.09	5410477.06	364.00	0	DEN	250	59.5	23.6	0.0	0.0	0.0	84.8	5.1	-1.0	0.0	0.0	0.0	0.0	0.0	-5.6
365	424083.09	5410477.06	364.00	0	DEN	500	62.6	23.6	0.0	0.0	0.0	84.8	9.4	-2.4	0.0	0.0	0.0	0.0	0.0	-5.5
365	424083.09	5410477.06	364.00	0	DEN	1000	68.1	23.6	0.0	0.0	0.0	84.8	17.8	-2.4	0.0	0.0	0.0	0.0	0.0	-8.4
365	424083.09	5410477.06	364.00	0	DEN	2000	67.0	23.6	0.0	0.0	0.0	84.8	47.1	-2.4	0.0	0.0	0.0	0.0	0.0	-38.8
365	424083.09	5410477.06	364.00	0	DEN	4000	59.5	23.6	0.0	0.0	0.0	84.8	159.7	-2.4	0.0	0.0	0.0	0.0	0.0	-158.9
365	424083.09	5410477.06	364.00	0	DEN	8000	50.7	23.6	0.0	0.0	0.0	84.8	569.8	-2.4	0.0	0.0	0.0	0.0	0.0	-577.7
459	424247.40	5410755.82	364.00	0	DEN	32	20.2	20.9	0.0	0.0	0.0	84.9	0.2	-5.8	0.0	0.0	0.0	0.0	0.0	-38.1
459	424247.40	5410755.82	364.00	0	DEN	63	38.7	20.9	0.0	0.0	0.0	84.9	0.6	-5.8	0.0	0.0	0.0	0.0	0.0	-20.0
459	424247.40	5410755.82	364.00	0	DEN	125	54.6	20.9	0.0	0.0	0.0	84.9	2.0	1.2	0.0	0.0	0.0	0.0	0.0	-12.6
459	424247.40	5410755.82	364.00	0	DEN	250	59.5	20.9	0.0	0.0	0.0	84.9	5.2	-1.2	0.0	0.0	0.0	0.0	0.0	-8.4
459	424247.40	5410755.82	364.00	0	DEN	500	62.6	20.9	0.0	0.0	0.0	84.9	9.6	-2.6	0.0	0.0	0.0	0.0	0.0	-8.3
459	424247.40	5410755.82	364.00	0	DEN	1000	68.1	20.9	0.0	0.0	0.0	84.9	18.2	-2.6	0.0	0.0	0.0	0.0	0.0	-11.4
459	424247.40	5410755.82	364.00	0	DEN	2000	67.0	20.9	0.0	0.0	0.0	84.9	48.1	-2.6	0.0	0.0	0.0	0.0	0.0	-42.4
459	424247.40	5410755.82	364.00	0	DEN	4000	59.5	20.9	0.0	0.0	0.0	84.9	162.9	-2.6	0.0	0.0	0.0	0.0	0.0	-164.8
459	424247.40	5410755.82	364.00	0	DEN	8000	50.7	20.9	0.0	0.0	0.0	84.9	581.2	-2.6	0.0	0.0	0.0	0.0	0.0	-591.8
461	424153.08	5410680.04	364.00	0	DEN	32	20.2	20.9	0.0	0.0	0.0	84.9	0.2	-5.8	0.0	0.0	0.0	0.0	0.0	-38.2
461	424153.08	5410680.04	364.00	0	DEN	63	38.7	20.9	0.0	0.0	0.0	84.9	0.6	-5.8	0.0	0.0	0.0	0.0	0.0	-20.1

Line Source, ISO 9613, Name: "WTR_OB", ID: ""																				
Nr.	X	Y	Z	Refl.	DEN	Freq.	Lw	l/a	Optime	K0	Dc	Adiv	Aatm	Agr	Afol	Ahous	Abar	Cmet	RL	Lr
	(m)	(m)	(m)			(Hz)	dB(A)	dB	dB	(dB)	(dB)	(dB)	(dB)	(dB)	(dB)	(dB)	(dB)	(dB)	(dB)	dB(A)
461	424153.08	5410680.04	364.00	0	DEN	125	54.6	20.9	0.0	0.0	0.0	84.9	2.0	1.3	0.0	0.0	0.0	0.0	0.0	-12.8
461	424153.08	5410680.04	364.00	0	DEN	250	59.5	20.9	0.0	0.0	0.0	84.9	5.2	-1.2	0.0	0.0	0.0	0.0	0.0	-8.6
461	424153.08	5410680.04	364.00	0	DEN	500	62.6	20.9	0.0	0.0	0.0	84.9	9.6	-2.5	0.0	0.0	0.0	0.0	0.0	-8.5
461	424153.08	5410680.04	364.00	0	DEN	1000	68.1	20.9	0.0	0.0	0.0	84.9	18.2	-2.5	0.0	0.0	0.0	0.0	0.0	-11.6
461	424153.08	5410680.04	364.00	0	DEN	2000	67.0	20.9	0.0	0.0	0.0	84.9	48.1	-2.5	0.0	0.0	0.0	0.0	0.0	-42.6
461	424153.08	5410680.04	364.00	0	DEN	4000	59.5	20.9	0.0	0.0	0.0	84.9	163.1	-2.5	0.0	0.0	0.0	0.0	0.0	-165.1
461	424153.08	5410680.04	364.00	0	DEN	8000	50.7	20.9	0.0	0.0	0.0	84.9	581.7	-2.5	0.0	0.0	0.0	0.0	0.0	-592.5
462	424354.98	5410780.20	364.00	0	DEN	32	20.2	20.3	0.0	0.0	0.0	84.8	0.2	-5.8	0.0	0.0	0.0	0.0	0.0	-38.6
462	424354.98	5410780.20	364.00	0	DEN	63	38.7	20.3	0.0	0.0	0.0	84.8	0.6	-5.8	0.0	0.0	0.0	0.0	0.0	-20.5
462	424354.98	5410780.20	364.00	0	DEN	125	54.6	20.3	0.0	0.0	0.0	84.8	2.0	1.2	0.0	0.0	0.0	0.0	0.0	-13.1
462	424354.98	5410780.20	364.00	0	DEN	250	59.5	20.3	0.0	0.0	0.0	84.8	5.1	-1.3	0.0	0.0	0.0	0.0	0.0	-8.8
462	424354.98	5410780.20	364.00	0	DEN	500	62.6	20.3	0.0	0.0	0.0	84.8	9.5	-2.7	0.0	0.0	0.0	0.0	0.0	-8.7
462	424354.98	5410780.20	364.00	0	DEN	1000	68.1	20.3	0.0	0.0	0.0	84.8	18.0	-2.7	0.0	0.0	0.0	0.0	0.0	-11.7
462	424354.98	5410780.20	364.00	0	DEN	2000	67.0	20.3	0.0	0.0	0.0	84.8	47.6	-2.7	0.0	0.0	0.0	0.0	0.0	-42.4
462	424354.98	5410780.20	364.00	0	DEN	4000	59.5	20.3	0.0	0.0	0.0	84.8	161.3	-2.7	0.0	0.0	0.0	0.0	0.0	-163.6
462	424354.98	5410780.20	364.00	0	DEN	8000	50.7	20.3	0.0	0.0	0.0	84.8	575.4	-2.7	0.0	0.0	0.0	0.0	0.0	-586.5
512	424087.26	5410622.11	364.00	0	DEN	32	20.2	17.5	0.0	0.0	0.0	84.9	0.2	-5.8	0.0	0.0	0.0	0.0	0.0	-41.5
512	424087.26	5410622.11	364.00	0	DEN	63	38.7	17.5	0.0	0.0	0.0	84.9	0.6	-5.8	0.0	0.0	0.0	0.0	0.0	-23.4
512	424087.26	5410622.11	364.00	0	DEN	125	54.6	17.5	0.0	0.0	0.0	84.9	2.0	1.4	0.0	0.0	0.0	0.0	0.0	-16.2
512	424087.26	5410622.11	364.00	0	DEN	250	59.5	17.5	0.0	0.0	0.0	84.9	5.2	-1.1	0.0	0.0	0.0	0.0	0.0	-12.0
512	424087.26	5410622.11	364.00	0	DEN	500	62.6	17.5	0.0	0.0	0.0	84.9	9.6	-2.5	0.0	0.0	0.0	0.0	0.0	-11.9
512	424087.26	5410622.11	364.00	0	DEN	1000	68.1	17.5	0.0	0.0	0.0	84.9	18.2	-2.5	0.0	0.0	0.0	0.0	0.0	-15.0
512	424087.26	5410622.11	364.00	0	DEN	2000	67.0	17.5	0.0	0.0	0.0	84.9	48.1	-2.5	0.0	0.0	0.0	0.0	0.0	-46.0
512	424087.26	5410622.11	364.00	0	DEN	4000	59.5	17.5	0.0	0.0	0.0	84.9	163.1	-2.5	0.0	0.0	0.0	0.0	0.0	-168.5
512	424087.26	5410622.11	364.00	0	DEN	8000	50.7	17.5	0.0	0.0	0.0	84.9	581.8	-2.5	0.0	0.0	0.0	0.0	0.0	-596.0
520	425819.99	5409402.62	327.35	0	DEN	32	20.2	11.4	0.0	0.0	0.0	80.4	0.1	-5.7	0.0	0.0	4.8	0.0	0.0	-47.8
520	425819.99	5409402.62	327.35	0	DEN	63	38.7	11.4	0.0	0.0	0.0	80.4	0.4	-5.7	0.0	0.0	4.8	0.0	0.0	-29.6
520	425819.99	5409402.62	327.35	0	DEN	125	54.6	11.4	0.0	0.0	0.0	80.4	1.2	2.2	0.0	0.0	2.6	0.0	0.0	-20.3
520	425819.99	5409402.62	327.35	0	DEN	250	59.5	11.4	0.0	0.0	0.0	80.4	3.1	-0.2	0.0	0.0	4.8	0.0	0.0	-17.0
520	425819.99	5409402.62	327.35	0	DEN	500	62.6	11.4	0.0	0.0	0.0	80.4	5.7	-1.6	0.0	0.0	4.8	0.0	0.0	-15.1
520	425819.99	5409402.62	327.35	0	DEN	1000	68.1	11.4	0.0	0.0	0.0	80.4	10.8	-1.6	0.0	0.0	4.8	0.0	0.0	-14.7
520	425819.99	5409402.62	327.35	0	DEN	2000	67.0	11.4	0.0	0.0	0.0	80.4	28.4	-1.6	0.0	0.0	4.8	0.0	0.0	-33.6
520	425819.99	5409402.62	327.35	0	DEN	4000	59.5	11.4	0.0	0.0	0.0	80.4	96.5	-1.6	0.0	0.0	4.9	0.0	0.0	-109.1
520	425819.99	5409402.62	327.35	0	DEN	8000	50.7	11.4	0.0	0.0	0.0	80.4	344.0	-1.6	0.0	0.0	5.0	0.0	0.0	-365.6
524	424049.21	5410596.41	364.00	0	DEN	32	20.2	15.6	0.0	0.0	0.0	85.0	0.2	-5.8	0.0	0.0	0.0	0.0	0.0	-43.4
524	424049.21	5410596.41	364.00	0	DEN	63	38.7	15.6	0.0	0.0	0.0	85.0	0.6	-5.8	0.0	0.0	0.0	0.0	0.0	-25.3
524	424049.21	5410596.41	364.00	0	DEN	125	54.6	15.6	0.0	0.0	0.0	85.0	2.0	1.3	0.0	0.0	0.0	0.0	0.0	-18.1
524	424049.21	5410596.41	364.00	0	DEN	250	59.5	15.6	0.0	0.0	0.0	85.0	5.2	-1.1	0.0	0.0	0.0	0.0	0.0	-13.9
524	424049.21	5410596.41	364.00	0	DEN	500	62.6	15.6	0.0	0.0	0.0	85.0	9.6	-2.5	0.0	0.0	0.0	0.0	0.0	-13.8
524	424049.21	5410596.41	364.00	0	DEN	1000	68.1	15.6	0.0	0.0	0.0	85.0	18.2	-2.5	0.0	0.0	0.0	0.0	0.0	-16.9
524	424049.21	5410596.41	364.00	0	DEN	2000	67.0	15.6	0.0	0.0	0.0	85.0	48.2	-2.5	0.0	0.0	0.0	0.0	0.0	-48.0
524	424049.21	5410596.41	364.00	0	DEN	4000	59.5	15.6	0.0	0.0	0.0	85.0	163.3	-2.5	0.0	0.0	0.0	0.0	0.0	-170.6
524	424049.21	5410596.41	364.00	0	DEN	8000	50.7	15.6	0.0	0.0	0.0	85.0	582.6	-2.5	0.0	0.0	0.0	0.0	0.0	-598.7

Line Source, ISO 9613, Name: "MGR_NPAG", ID: ""																				
Nr.	X	Y	Z	Refl.	DEN	Freq.	Lw	l/a	Optime	K0	Dc	Adiv	Aatm	Agr	Afol	Ahous	Abar	Cmet	RL	Lr
	(m)	(m)	(m)			(Hz)	dB(A)	dB	dB	(dB)	(dB)	(dB)	(dB)	(dB)	(dB)	(dB)	(dB)	(dB)	(dB)	dB(A)
202	425584.38	5409336.42	338.65	0	DEN	32	29.1	24.7	0.0	0.0	0.0	80.6	0.1	-5.7	0.0	0.0	4.8	0.0	0.0	-25.9
202	425584.38	5409336.42	338.65	0	DEN	63	46.6	24.7	0.0	0.0	0.0	80.6	0.4	-5.7	0.0	0.0	4.8	0.0	0.0	-8.7
202	425584.38	5409336.42	338.65	0	DEN	125	58.3	24.7	0.0	0.0	0.0	80.6	1.2	2.3	0.0	0.0	2.5	0.0	0.0	-3.6
202	425584.38	5409336.42	338.65	0	DEN	250	60.9	24.7	0.0	0.0	0.0	80.6	3.2	-0.2	0.0	0.0	4.8	0.0	0.0	-2.7
202	425584.38	5409336.42	338.65	0	DEN	500	65.1	24.7	0.0	0.0	0.0	80.6	5.8	-1.6	0.0	0.0	4.8	0.0	0.0	0.2
202	425584.38	5409336.42	338.65	0	DEN	1000	65.6	24.7	0.0	0.0	0.0	80.6	11.1	-1.6	0.0	0.0	4.8	0.0	0.0	-4.6
202	425584.38	5409336.42	338.65	0	DEN	2000	64.3	24.7	0.0	0.0	0.0	80.6	29.3	-1.6	0.0	0.0	4.8	0.0	0.0	-24.1
202	425584.38	5409336.42	338.65	0	DEN	4000	60.4	24.7	0.0	0.0	0.0	80.6	99.2	-1.6	0.0	0.0	4.8	0.0	0.0	-97.9
202	425584.38	5409336.42	338.65	0	DEN	8000	55.1	24.7	0.0	0.0	0.0	80.6	353.9	-1.6	0.0	0.0	4.8	0.0	0.0	-357.9
215	425299.82	5409344.20	349.02	0	DEN	32	29.1	24.4	0.0	0.0	0.0	81.1	0.1	-5.8	0.0	0.0	4.8	0.0	0.0	-26.7
215	425299.82	5409344.20	349.02	0	DEN	63	46.6	24.4	0.0	0.0	0.0	81.1	0.4	-5.8	0.0	0.0	4.8	0.0	0.0	-9.5
215	425299.82	5409344.20	349.02	0	DEN	125	58.3	24.4	0.0	0.0	0.0	81.1	1.3	4.7	0.0	0.0	0.1	0.0	0.0	-4.5
215	425299.82	5409344.20	349.02	0	DEN	250	60.9	24.4	0.0	0.0	0.0	81.1	3.4	1.4	0.0	0.0	3.4	0.0	0.0	-3.9
215	425299.82	5409344.20	349.02	0	DEN	500	65.1	24.4	0.0	0.0	0.0	81.1	6.2	-0.9	0.0	0.0	4.8	0.0	0.0	-1.7
215	425299.82	5409344.20	349.02	0	DEN	1000	65.6	24.4	0.0	0.0	0.0	81.1	11.8	-0.9	0.0	0.0	4.8	0.0	0.0	-6.8
215	425299.82	5409344.20	349.02	0	DEN	2000	64.3	24.4	0.0	0.0	0.0	81.1	31.1	-0.9	0.0	0.0	4.8	0.0	0.0	-27.4

Line Source, ISO 9613, Name: "MGR_NPAG", ID: ""																					
Nr.	X	Y	Z	Refl.	DEN	Freq.	Lw	l/a	Optime	K0	Dc	Adiv	Aatm	Agr	Afol	Ahous	Abar	Cmet	RL	Lr
	(m)	(m)	(m)			(Hz)	dB(A)	dB	dB	(dB)	(dB)	(dB)	(dB)	(dB)	(dB)	(dB)	(dB)	(dB)	(dB)	dB(A)
215	425299.82	5409344.20	349.02	0	DEN	4000	60.4	24.4	0.0	0.0	0.0	81.1	105.4	-0.9	0.0	0.0	4.8	0.0	0.0	-105.6
215	425299.82	5409344.20	349.02	0	DEN	8000	55.1	24.4	0.0	0.0	0.0	81.1	376.0	-0.9	0.0	0.0	4.8	0.0	0.0	-381.5
229	425705.28	5409421.88	317.89	0	DEN	32	29.1	23.6	0.0	0.0	0.0	80.6	0.1	-5.7	0.0	0.0	4.8	0.0	0.0	-27.0
229	425705.28	5409421.88	317.89	0	DEN	63	46.6	23.6	0.0	0.0	0.0	80.6	0.4	-5.7	0.0	0.0	4.8	0.0	0.0	-9.8
229	425705.28	5409421.88	317.89	0	DEN	125	58.3	23.6	0.0	0.0	0.0	80.6	1.2	2.2	0.0	0.0	2.6	0.0	0.0	-4.8
229	425705.28	5409421.88	317.89	0	DEN	250	60.9	23.6	0.0	0.0	0.0	80.6	3.2	-0.3	0.0	0.0	4.9	0.0	0.0	-3.9
229	425705.28	5409421.88	317.89	0	DEN	500	65.1	23.6	0.0	0.0	0.0	80.6	5.8	-1.6	0.0	0.0	4.9	0.0	0.0	-1.0
229	425705.28	5409421.88	317.89	0	DEN	1000	65.6	23.6	0.0	0.0	0.0	80.6	11.1	-1.6	0.0	0.0	5.1	0.0	0.0	-5.9
229	425705.28	5409421.88	317.89	0	DEN	2000	64.3	23.6	0.0	0.0	0.0	80.6	29.2	-1.6	0.0	0.0	5.4	0.0	0.0	-25.7
229	425705.28	5409421.88	317.89	0	DEN	4000	60.4	23.6	0.0	0.0	0.0	80.6	99.1	-1.6	0.0	0.0	5.9	0.0	0.0	-100.0
229	425705.28	5409421.88	317.89	0	DEN	8000	55.1	23.6	0.0	0.0	0.0	80.6	353.5	-1.6	0.0	0.0	6.8	0.0	0.0	-360.5
266	424417.87	5410109.72	360.56	0	DEN	32	29.1	25.8	0.0	0.0	0.0	83.8	0.1	-5.8	0.0	0.0	0.0	0.0	0.0	-23.2
266	424417.87	5410109.72	360.56	0	DEN	63	46.6	25.8	0.0	0.0	0.0	83.8	0.5	-5.8	0.0	0.0	0.0	0.0	0.0	-6.1
266	424417.87	5410109.72	360.56	0	DEN	125	58.3	25.8	0.0	0.0	0.0	83.8	1.8	1.7	0.0	0.0	0.0	0.0	0.0	-3.2
266	424417.87	5410109.72	360.56	0	DEN	250	60.9	25.8	0.0	0.0	0.0	83.8	4.6	-0.7	0.0	0.0	0.0	0.0	0.0	-1.0
266	424417.87	5410109.72	360.56	0	DEN	500	65.1	25.8	0.0	0.0	0.0	83.8	8.4	-2.1	0.0	0.0	0.0	0.0	0.0	0.8
266	424417.87	5410109.72	360.56	0	DEN	1000	65.6	25.8	0.0	0.0	0.0	83.8	16.0	-2.1	0.0	0.0	0.0	0.0	0.0	-6.3
266	424417.87	5410109.72	360.56	0	DEN	2000	64.3	25.8	0.0	0.0	0.0	83.8	42.3	-2.1	0.0	0.0	0.0	0.0	0.0	-33.9
266	424417.87	5410109.72	360.56	0	DEN	4000	60.4	25.8	0.0	0.0	0.0	83.8	143.5	-2.1	0.0	0.0	0.0	0.0	0.0	-138.9
266	424417.87	5410109.72	360.56	0	DEN	8000	55.1	25.8	0.0	0.0	0.0	83.8	511.7	-2.1	0.0	0.0	0.0	0.0	0.0	-512.5
280	425500.03	5409457.77	299.84	0	DEN	32	29.1	22.8	0.0	0.0	0.0	81.0	0.1	-5.8	0.0	0.0	5.2	0.0	0.0	-28.6
280	425500.03	5409457.77	299.84	0	DEN	63	46.6	22.8	0.0	0.0	0.0	81.0	0.4	-5.8	0.0	0.0	5.5	0.0	0.0	-11.8
280	425500.03	5409457.77	299.84	0	DEN	125	58.3	22.8	0.0	0.0	0.0	81.0	1.3	2.2	0.0	0.0	4.0	0.0	0.0	-7.4
280	425500.03	5409457.77	299.84	0	DEN	250	60.9	22.8	0.0	0.0	0.0	81.0	3.3	-0.3	0.0	0.0	7.2	0.0	0.0	-7.6
280	425500.03	5409457.77	299.84	0	DEN	500	65.1	22.8	0.0	0.0	0.0	81.0	6.1	-1.7	0.0	0.0	8.8	0.0	0.0	-6.4
280	425500.03	5409457.77	299.84	0	DEN	1000	65.6	22.8	0.0	0.0	0.0	81.0	11.6	-1.7	0.0	0.0	10.9	0.0	0.0	-13.4
280	425500.03	5409457.77	299.84	0	DEN	2000	64.3	22.8	0.0	0.0	0.0	81.0	30.7	-1.7	0.0	0.0	13.3	0.0	0.0	-36.2
280	425500.03	5409457.77	299.84	0	DEN	4000	60.4	22.8	0.0	0.0	0.0	81.0	104.1	-1.7	0.0	0.0	16.0	0.0	0.0	-116.2
280	425500.03	5409457.77	299.84	0	DEN	8000	55.1	22.8	0.0	0.0	0.0	81.0	371.2	-1.7	0.0	0.0	18.9	0.0	0.0	-391.5
281	424642.89	5409858.56	354.60	0	DEN	32	29.1	24.8	0.0	0.0	0.0	83.1	0.1	-5.8	0.0	0.0	4.8	0.0	0.0	-28.3
281	424642.89	5409858.56	354.60	0	DEN	63	46.6	24.8	0.0	0.0	0.0	83.1	0.5	-5.8	0.0	0.0	4.8	0.0	0.0	-11.2
281	424642.89	5409858.56	354.60	0	DEN	125	58.3	24.8	0.0	0.0	0.0	83.1	1.7	2.0	0.0	0.0	2.7	0.0	0.0	-6.5
281	424642.89	5409858.56	354.60	0	DEN	250	60.9	24.8	0.0	0.0	0.0	83.1	4.2	-0.5	0.0	0.0	4.8	0.0	0.0	-6.0
281	424642.89	5409858.56	354.60	0	DEN	500	65.1	24.8	0.0	0.0	0.0	83.1	7.8	-1.9	0.0	0.0	4.8	0.0	0.0	-3.9
281	424642.89	5409858.56	354.60	0	DEN	1000	65.6	24.8	0.0	0.0	0.0	83.1	14.8	-1.9	0.0	0.0	4.8	0.0	0.0	-10.4
281	424642.89	5409858.56	354.60	0	DEN	2000	64.3	24.8	0.0	0.0	0.0	83.1	39.0	-1.9	0.0	0.0	4.8	0.0	0.0	-36.0
281	424642.89	5409858.56	354.60	0	DEN	4000	60.4	24.8	0.0	0.0	0.0	83.1	132.4	-1.9	0.0	0.0	4.8	0.0	0.0	-133.2
281	424642.89	5409858.56	354.60	0	DEN	8000	55.1	24.8	0.0	0.0	0.0	83.1	472.3	-1.9	0.0	0.0	4.8	0.0	0.0	-478.4
306	424815.74	5409646.59	350.53	0	DEN	32	29.1	24.0	0.0	0.0	0.0	82.5	0.1	-5.8	0.0	0.0	4.8	0.0	0.0	-28.5
306	424815.74	5409646.59	350.53	0	DEN	63	46.6	24.0	0.0	0.0	0.0	82.5	0.5	-5.8	0.0	0.0	4.8	0.0	0.0	-11.4
306	424815.74	5409646.59	350.53	0	DEN	125	58.3	24.0	0.0	0.0	0.0	82.5	1.5	2.1	0.0	0.0	2.7	0.0	0.0	-6.6
306	424815.74	5409646.59	350.53	0	DEN	250	60.9	24.0	0.0	0.0	0.0	82.5	3.9	-0.3	0.0	0.0	4.8	0.0	0.0	-6.0
306	424815.74	5409646.59	350.53	0	DEN	500	65.1	24.0	0.0	0.0	0.0	82.5	7.3	-1.7	0.0	0.0	4.8	0.0	0.0	-3.8
306	424815.74	5409646.59	350.53	0	DEN	1000	65.6	24.0	0.0	0.0	0.0	82.5	13.8	-1.7	0.0	0.0	4.8	0.0	0.0	-9.8
306	424815.74	5409646.59	350.53	0	DEN	2000	64.3	24.0	0.0	0.0	0.0	82.5	36.4	-1.7	0.0	0.0	4.8	0.0	0.0	-33.7
306	424815.74	5409646.59	350.53	0	DEN	4000	60.4	24.0	0.0	0.0	0.0	82.5	123.5	-1.7	0.0	0.0	4.8	0.0	0.0	-124.7
306	424815.74	5409646.59	350.53	0	DEN	8000	55.1	24.0	0.0	0.0	0.0	82.5	440.4	-1.7	0.0	0.0	4.8	0.0	0.0	-446.9
327	424036.85	5410283.13	364.00	0	DEN	32	29.1	25.5	0.0	0.0	0.0	84.6	0.2	-5.8	0.0	0.0	0.0	0.0	0.0	-24.3
327	424036.85	5410283.13	364.00	0	DEN	63	46.6	25.5	0.0	0.0	0.0	84.6	0.6	-5.8	0.0	0.0	0.0	0.0	0.0	-7.2
327	424036.85	5410283.13	364.00	0	DEN	125	58.3	25.5	0.0	0.0	0.0	84.6	2.0	2.1	0.0	0.0	0.0	0.0	0.0	-4.8
327	424036.85	5410283.13	364.00	0	DEN	250	60.9	25.5	0.0	0.0	0.0	84.6	5.0	-0.4	0.0	0.0	0.0	0.0	0.0	-2.8
327	424036.85	5410283.13	364.00	0	DEN	500	65.1	25.5	0.0	0.0	0.0	84.6	9.2	-1.8	0.0	0.0	0.0	0.0	0.0	-1.4
327	424036.85	5410283.13	364.00	0	DEN	1000	65.6	25.5	0.0	0.0	0.0	84.6	17.4	-1.8	0.0	0.0	0.0	0.0	0.0	-9.1
327	424036.85	5410283.13	364.00	0	DEN	2000	64.3	25.5	0.0	0.0	0.0	84.6	46.1	-1.8	0.0	0.0	0.0	0.0	0.0	-39.1
327	424036.85	5410283.13	364.00	0	DEN	4000	60.4	25.5	0.0	0.0	0.0	84.6	156.3	-1.8	0.0	0.0	0.0	0.0	0.0	-153.2
327	424036.85	5410283.13	364.00	0	DEN	8000	55.1	25.5	0.0	0.0	0.0	84.6	557.4	-1.8	0.0	0.0	0.0	0.0	0.0	-559.6
339	424973.04	5409499.81	349.00	0	DEN	32	29.1	22.6	0.0	0.0	0.0	82.0	0.1	-5.8	0.0	0.0	4.8	0.0	0.0	-29.4
339	424973.04	5409499.81	349.00	0	DEN	63	46.6	22.6	0.0	0.0	0.0	82.0	0.4	-5.8	0.0	0.0	4.8	0.0	0.0	-12.3
339	424973.04	5409499.81	349.00	0	DEN	125	58.3	22.6	0.0	0.0	0.0	82.0	1.5	2.3	0.0	0.0	2.5	0.0	0.0	-7.4
339	424973.04	5409499.81	349.00	0	DEN	250	60.9	22.6	0.0	0.0	0.0	82.0	3.7	-0.2	0.0	0.0	4.8	0.0	0.0	-6.8
339	424973.04	5409499.81	349.00	0	DEN	500	65.1	22.6	0.0	0.0	0.0	82.0	6.9	-1.6	0.0	0.0	4.8	0.0	0.0	-4.4
339	424973.04	5409499.81	349.00	0	DEN	1000	65.6	22.6	0.0	0.0	0.0	82.0	13.0	-1.6	0.0	0.0	4.8	0.0	0.0	-10.0
339	424973.04	5409499.81	349.00	0	DEN	2000	64.3	22.6	0.0	0.0	0.0	82.0	34.3	-1.6	0.0	0.0	4.8	0.0	0.0	-32.7

Line Source, ISO 9613, Name: "MGR_NPAG", ID: ""																				
Nr.	X	Y	Z	Refl.	DEN	Freq.	Lw	l/a	Optime	K0	Dc	Adiv	Aatm	Agr	Afol	Ahous	Abar	Cmet	RL	Lr
	(m)	(m)	(m)			(Hz)	dB(A)	dB	dB	(dB)	(dB)	(dB)	(dB)	(dB)	(dB)	(dB)	(dB)	(dB)	(dB)	dB(A)
339	424973.04	5409499.81	349.00	0	DEN	4000	60.4	22.6	0.0	0.0	0.0	82.0	116.4	-1.6	0.0	0.0	4.8	0.0	0.0	-118.7
339	424973.04	5409499.81	349.00	0	DEN	8000	55.1	22.6	0.0	0.0	0.0	82.0	415.3	-1.6	0.0	0.0	4.8	0.0	0.0	-422.9
353	423606.00	5410411.07	364.00	0	DEN	32	29.1	25.3	0.0	0.0	0.0	85.3	0.2	-5.9	0.0	0.0	0.0	0.0	0.0	-25.2
353	423606.00	5410411.07	364.00	0	DEN	63	46.6	25.3	0.0	0.0	0.0	85.3	0.6	-5.9	0.0	0.0	0.0	0.0	0.0	-8.1
353	423606.00	5410411.07	364.00	0	DEN	125	58.3	25.3	0.0	0.0	0.0	85.3	2.1	1.9	0.0	0.0	0.0	0.0	0.0	-5.7
353	423606.00	5410411.07	364.00	0	DEN	250	60.9	25.3	0.0	0.0	0.0	85.3	5.4	-0.5	0.0	0.0	0.0	0.0	0.0	-4.0
353	423606.00	5410411.07	364.00	0	DEN	500	65.1	25.3	0.0	0.0	0.0	85.3	10.0	-1.9	0.0	0.0	0.0	0.0	0.0	-2.9
353	423606.00	5410411.07	364.00	0	DEN	1000	65.6	25.3	0.0	0.0	0.0	85.3	18.9	-1.9	0.0	0.0	0.0	0.0	0.0	-11.4
353	423606.00	5410411.07	364.00	0	DEN	2000	64.3	25.3	0.0	0.0	0.0	85.3	50.0	-1.9	0.0	0.0	0.0	0.0	0.0	-43.7
353	423606.00	5410411.07	364.00	0	DEN	4000	60.4	25.3	0.0	0.0	0.0	85.3	169.5	-1.9	0.0	0.0	0.0	0.0	0.0	-167.1
353	423606.00	5410411.07	364.00	0	DEN	8000	55.1	25.3	0.0	0.0	0.0	85.3	604.4	-1.9	0.0	0.0	0.0	0.0	0.0	-607.4
359	425102.15	5409403.92	349.02	0	DEN	32	29.1	21.5	0.0	0.0	0.0	81.6	0.1	-5.8	0.0	0.0	4.8	0.0	0.0	-30.1
359	425102.15	5409403.92	349.02	0	DEN	63	46.6	21.5	0.0	0.0	0.0	81.6	0.4	-5.8	0.0	0.0	4.8	0.0	0.0	-12.9
359	425102.15	5409403.92	349.02	0	DEN	125	58.3	21.5	0.0	0.0	0.0	81.6	1.4	2.9	0.0	0.0	1.9	0.0	0.0	-8.0
359	425102.15	5409403.92	349.02	0	DEN	250	60.9	21.5	0.0	0.0	0.0	81.6	3.5	0.2	0.0	0.0	4.5	0.0	0.0	-7.5
359	425102.15	5409403.92	349.02	0	DEN	500	65.1	21.5	0.0	0.0	0.0	81.6	6.5	-1.3	0.0	0.0	4.8	0.0	0.0	-5.0
359	425102.15	5409403.92	349.02	0	DEN	1000	65.6	21.5	0.0	0.0	0.0	81.6	12.4	-1.3	0.0	0.0	4.8	0.0	0.0	-10.3
359	425102.15	5409403.92	349.02	0	DEN	2000	64.3	21.5	0.0	0.0	0.0	81.6	32.8	-1.3	0.0	0.0	4.8	0.0	0.0	-32.0
359	425102.15	5409403.92	349.02	0	DEN	4000	60.4	21.5	0.0	0.0	0.0	81.6	111.2	-1.3	0.0	0.0	4.8	0.0	0.0	-114.4
359	425102.15	5409403.92	349.02	0	DEN	8000	55.1	21.5	0.0	0.0	0.0	81.6	396.8	-1.3	0.0	0.0	4.8	0.0	0.0	-405.2
385	425777.04	5409373.77	328.24	0	DEN	32	29.1	20.0	0.0	0.0	0.0	80.4	0.1	-5.7	0.0	0.0	4.8	0.0	0.0	-30.4
385	425777.04	5409373.77	328.24	0	DEN	63	46.6	20.0	0.0	0.0	0.0	80.4	0.4	-5.7	0.0	0.0	4.8	0.0	0.0	-13.2
385	425777.04	5409373.77	328.24	0	DEN	125	58.3	20.0	0.0	0.0	0.0	80.4	1.2	2.3	0.0	0.0	2.5	0.0	0.0	-8.1
385	425777.04	5409373.77	328.24	0	DEN	250	60.9	20.0	0.0	0.0	0.0	80.4	3.1	-0.2	0.0	0.0	4.8	0.0	0.0	-7.2
385	425777.04	5409373.77	328.24	0	DEN	500	65.1	20.0	0.0	0.0	0.0	80.4	5.7	-1.6	0.0	0.0	4.9	0.0	0.0	-4.3
385	425777.04	5409373.77	328.24	0	DEN	1000	65.6	20.0	0.0	0.0	0.0	80.4	10.8	-1.6	0.0	0.0	5.1	0.0	0.0	-9.0
385	425777.04	5409373.77	328.24	0	DEN	2000	64.3	20.0	0.0	0.0	0.0	80.4	28.4	-1.6	0.0	0.0	5.3	0.0	0.0	-28.3
385	425777.04	5409373.77	328.24	0	DEN	4000	60.4	20.0	0.0	0.0	0.0	80.4	96.5	-1.6	0.0	0.0	5.8	0.0	0.0	-100.7
385	425777.04	5409373.77	328.24	0	DEN	8000	55.1	20.0	0.0	0.0	0.0	80.4	344.1	-1.6	0.0	0.0	6.7	0.0	0.0	-354.5
463	423795.93	5410301.42	364.00	0	DEN	32	29.1	21.2	0.0	0.0	0.0	84.9	0.2	-5.8	0.0	0.0	0.0	0.0	0.0	-29.0
463	423795.93	5410301.42	364.00	0	DEN	63	46.6	21.2	0.0	0.0	0.0	84.9	0.6	-5.8	0.0	0.0	0.0	0.0	0.0	-11.9
463	423795.93	5410301.42	364.00	0	DEN	125	58.3	21.2	0.0	0.0	0.0	84.9	2.0	2.1	0.0	0.0	0.0	0.0	0.0	-9.5
463	423795.93	5410301.42	364.00	0	DEN	250	60.9	21.2	0.0	0.0	0.0	84.9	5.2	-0.4	0.0	0.0	0.0	0.0	0.0	-7.6
463	423795.93	5410301.42	364.00	0	DEN	500	65.1	21.2	0.0	0.0	0.0	84.9	9.6	-1.8	0.0	0.0	0.0	0.0	0.0	-6.4
463	423795.93	5410301.42	364.00	0	DEN	1000	65.6	21.2	0.0	0.0	0.0	84.9	18.1	-1.8	0.0	0.0	0.0	0.0	0.0	-14.5
463	423795.93	5410301.42	364.00	0	DEN	2000	64.3	21.2	0.0	0.0	0.0	84.9	47.9	-1.8	0.0	0.0	0.0	0.0	0.0	-45.6
463	423795.93	5410301.42	364.00	0	DEN	4000	60.4	21.2	0.0	0.0	0.0	84.9	162.4	-1.8	0.0	0.0	0.0	0.0	0.0	-164.0
463	423795.93	5410301.42	364.00	0	DEN	8000	55.1	21.2	0.0	0.0	0.0	84.9	579.4	-1.8	0.0	0.0	0.0	0.0	0.0	-586.2
505	424244.57	5410248.06	364.00	0	DEN	32	29.1	18.3	0.0	0.0	0.0	84.3	0.1	-5.8	0.0	0.0	0.0	0.0	0.0	-31.1
505	424244.57	5410248.06	364.00	0	DEN	63	46.6	18.3	0.0	0.0	0.0	84.3	0.6	-5.8	0.0	0.0	0.0	0.0	0.0	-14.0
505	424244.57	5410248.06	364.00	0	DEN	125	58.3	18.3	0.0	0.0	0.0	84.3	1.9	1.6	0.0	0.0	0.0	0.0	0.0	-11.1
505	424244.57	5410248.06	364.00	0	DEN	250	60.9	18.3	0.0	0.0	0.0	84.3	4.8	-0.9	0.0	0.0	0.0	0.0	0.0	-9.0
505	424244.57	5410248.06	364.00	0	DEN	500	65.1	18.3	0.0	0.0	0.0	84.3	8.9	-2.2	0.0	0.0	0.0	0.0	0.0	-7.4
505	424244.57	5410248.06	364.00	0	DEN	1000	65.6	18.3	0.0	0.0	0.0	84.3	16.8	-2.2	0.0	0.0	0.0	0.0	0.0	-14.9
505	424244.57	5410248.06	364.00	0	DEN	2000	64.3	18.3	0.0	0.0	0.0	84.3	44.4	-2.2	0.0	0.0	0.0	0.0	0.0	-43.8
505	424244.57	5410248.06	364.00	0	DEN	4000	60.4	18.3	0.0	0.0	0.0	84.3	150.7	-2.2	0.0	0.0	0.0	0.0	0.0	-153.9
505	424244.57	5410248.06	364.00	0	DEN	8000	55.1	18.3	0.0	0.0	0.0	84.3	537.4	-2.2	0.0	0.0	0.0	0.0	0.0	-546.0
528	425820.22	5409402.51	327.37	0	DEN	32	29.1	11.5	0.0	0.0	0.0	80.4	0.1	-5.7	0.0	0.0	4.8	0.0	0.0	-38.9
528	425820.22	5409402.51	327.37	0	DEN	63	46.6	11.5	0.0	0.0	0.0	80.4	0.4	-5.7	0.0	0.0	4.8	0.0	0.0	-21.7
528	425820.22	5409402.51	327.37	0	DEN	125	58.3	11.5	0.0	0.0	0.0	80.4	1.2	2.2	0.0	0.0	2.6	0.0	0.0	-16.6
528	425820.22	5409402.51	327.37	0	DEN	250	60.9	11.5	0.0	0.0	0.0	80.4	3.1	-0.2	0.0	0.0	4.8	0.0	0.0	-15.6
528	425820.22	5409402.51	327.37	0	DEN	500	65.1	11.5	0.0	0.0	0.0	80.4	5.7	-1.6	0.0	0.0	4.8	0.0	0.0	-12.7
528	425820.22	5409402.51	327.37	0	DEN	1000	65.6	11.5	0.0	0.0	0.0	80.4	10.8	-1.6	0.0	0.0	4.8	0.0	0.0	-17.3
528	425820.22	5409402.51	327.37	0	DEN	2000	64.3	11.5	0.0	0.0	0.0	80.4	28.4	-1.6	0.0	0.0	4.8	0.0	0.0	-36.3
528	425820.22	5409402.51	327.37	0	DEN	4000	60.4	11.5	0.0	0.0	0.0	80.4	96.4	-1.6	0.0	0.0	4.9	0.0	0.0	-108.2
528	425820.22	5409402.51	327.37	0	DEN	8000	55.1	11.5	0.0	0.0	0.0	80.4	344.0	-1.6	0.0	0.0	5.0	0.0	0.0	-361.2

Line Source, ISO 9613, Name: "TRE_OP-LGO", ID: ""																				
Nr.	X	Y	Z	Refl.	DEN	Freq.	Lw	l/a	Optime	K0	Dc	Adiv	Aatm	Agr	Afol	Ahous	Abar	Cmet	RL	Lr
	(m)	(m)	(m)			(Hz)	dB(A)	dB	dB	(dB)	(dB)	(dB)	(dB)	(dB)	(dB)	(dB)	(dB)	(dB)	(dB)	dB(A)
381	425807.01	5409407.94	324.36	0	DEN	32	30.2	26.3	0.0	0.0	0.0	80.4	0.1	-5.7	0.0	0.0	4.8	0.0	0.0	-23.0
381	425807.01	5409407.94	324.36	0	DEN	63	48.1	26.3	0.0	0.0	0.0	80.4	0.4	-5.7	0.0	0.0	4.8	0.0	0.0	-5.4
381	425807.01	5409407.94	324.36	0	DEN	125	55.0	26.3	0.0	0.0	0.0	80.4	1.2	2.2	0.0	0.0	2.6	0.0	0.0	-5.1

Line Source, ISO 9613, Name: "TRE_OP-LGO", ID: ""																					
Nr.	X	Y	Z	Refl.	DEN	Freq.	Lw	l/a	Optime	K0	Dc	Adiv	Aatm	Agr	Afol	Ahous	Abar	Cmet	RL	Lr
	(m)	(m)	(m)			(Hz)	dB(A)	dB	dB	(dB)	(dB)	(dB)	(dB)	(dB)	(dB)	(dB)	(dB)	(dB)	(dB)	dB(A)
381	425807.01	5409407.94	324.36	0	DEN	250	55.8	26.3	0.0	0.0	0.0	80.4	3.1	-0.2	0.0	0.0	4.8	0.0	0.0	-5.9
381	425807.01	5409407.94	324.36	0	DEN	500	59.2	26.3	0.0	0.0	0.0	80.4	5.7	-1.6	0.0	0.0	4.8	0.0	0.0	-3.8
381	425807.01	5409407.94	324.36	0	DEN	1000	58.6	26.3	0.0	0.0	0.0	80.4	10.8	-1.6	0.0	0.0	4.8	0.0	0.0	-9.5
381	425807.01	5409407.94	324.36	0	DEN	2000	56.4	26.3	0.0	0.0	0.0	80.4	28.6	-1.6	0.0	0.0	4.9	0.0	0.0	-29.5
381	425807.01	5409407.94	324.36	0	DEN	4000	51.5	26.3	0.0	0.0	0.0	80.4	96.8	-1.6	0.0	0.0	5.0	0.0	0.0	-102.8
381	425807.01	5409407.94	324.36	0	DEN	8000	42.6	26.3	0.0	0.0	0.0	80.4	345.4	-1.6	0.0	0.0	5.3	0.0	0.0	-360.5
416	427615.12	5409653.01	392.39	0	DEN	32	30.2	24.0	0.0	0.0	0.0	79.6	0.1	-5.7	0.0	0.0	0.0	0.0	0.0	-19.8
416	427615.12	5409653.01	392.39	0	DEN	63	48.1	24.0	0.0	0.0	0.0	79.6	0.3	-5.7	0.0	0.0	0.0	0.0	0.0	-2.1
416	427615.12	5409653.01	392.39	0	DEN	125	55.0	24.0	0.0	0.0	0.0	79.6	1.1	1.4	0.0	0.0	0.0	0.0	0.0	-3.2
416	427615.12	5409653.01	392.39	0	DEN	250	55.8	24.0	0.0	0.0	0.0	79.6	2.8	-1.0	0.0	0.0	0.0	0.0	0.0	-1.6
416	427615.12	5409653.01	392.39	0	DEN	500	59.2	24.0	0.0	0.0	0.0	79.6	5.2	-2.4	0.0	0.0	0.0	0.0	0.0	0.8
416	427615.12	5409653.01	392.39	0	DEN	1000	58.6	24.0	0.0	0.0	0.0	79.6	9.9	-2.4	0.0	0.0	0.0	0.0	0.0	-4.5
416	427615.12	5409653.01	392.39	0	DEN	2000	56.4	24.0	0.0	0.0	0.0	79.6	26.2	-2.4	0.0	0.0	0.0	0.0	0.0	-23.0
416	427615.12	5409653.01	392.39	0	DEN	4000	51.5	24.0	0.0	0.0	0.0	79.6	88.7	-2.4	0.0	0.0	0.0	0.0	0.0	-90.4
416	427615.12	5409653.01	392.39	0	DEN	8000	42.6	24.0	0.0	0.0	0.0	79.6	316.3	-2.4	0.0	0.0	0.0	0.0	0.0	-326.9
424	427128.16	5409763.49	392.48	0	DEN	32	30.2	24.2	0.0	0.0	0.0	80.0	0.1	-5.7	0.0	0.0	0.0	0.0	0.0	-20.0
424	427128.16	5409763.49	392.48	0	DEN	63	48.1	24.2	0.0	0.0	0.0	80.0	0.3	-5.7	0.0	0.0	0.0	0.0	0.0	-2.3
424	427128.16	5409763.49	392.48	0	DEN	125	55.0	24.2	0.0	0.0	0.0	80.0	1.2	1.8	0.0	0.0	0.0	0.0	0.0	-3.8
424	427128.16	5409763.49	392.48	0	DEN	250	55.8	24.2	0.0	0.0	0.0	80.0	3.0	-0.6	0.0	0.0	0.0	0.0	0.0	-2.3
424	427128.16	5409763.49	392.48	0	DEN	500	59.2	24.2	0.0	0.0	0.0	80.0	5.5	-2.0	0.0	0.0	0.0	0.0	0.0	-0.0
424	427128.16	5409763.49	392.48	0	DEN	1000	58.6	24.2	0.0	0.0	0.0	80.0	10.4	-2.0	0.0	0.0	0.0	0.0	0.0	-5.5
424	427128.16	5409763.49	392.48	0	DEN	2000	56.4	24.2	0.0	0.0	0.0	80.0	27.3	-2.0	0.0	0.0	0.0	0.0	0.0	-24.7
424	427128.16	5409763.49	392.48	0	DEN	4000	51.5	24.2	0.0	0.0	0.0	80.0	92.7	-2.0	0.0	0.0	0.0	0.0	0.0	-95.0
424	427128.16	5409763.49	392.48	0	DEN	8000	42.6	24.2	0.0	0.0	0.0	80.0	330.8	-2.0	0.0	0.0	0.0	0.0	0.0	-341.9
465	427802.94	5409569.67	391.85	0	DEN	32	30.2	22.1	0.0	0.0	0.0	79.4	0.1	-5.7	0.0	0.0	0.0	0.0	0.0	-21.5
465	427802.94	5409569.67	391.85	0	DEN	63	48.1	22.1	0.0	0.0	0.0	79.4	0.3	-5.7	0.0	0.0	0.0	0.0	0.0	-3.9
465	427802.94	5409569.67	391.85	0	DEN	125	55.0	22.1	0.0	0.0	0.0	79.4	1.1	2.0	0.0	0.0	0.0	0.0	0.0	-5.4
465	427802.94	5409569.67	391.85	0	DEN	250	55.8	22.1	0.0	0.0	0.0	79.4	2.8	-0.5	0.0	0.0	0.0	0.0	0.0	-3.9
465	427802.94	5409569.67	391.85	0	DEN	500	59.2	22.1	0.0	0.0	0.0	79.4	5.1	-1.8	0.0	0.0	0.0	0.0	0.0	-1.4
465	427802.94	5409569.67	391.85	0	DEN	1000	58.6	22.1	0.0	0.0	0.0	79.4	9.7	-1.8	0.0	0.0	0.0	0.0	0.0	-6.6
465	427802.94	5409569.67	391.85	0	DEN	2000	56.4	22.1	0.0	0.0	0.0	79.4	25.5	-1.8	0.0	0.0	0.0	0.0	0.0	-24.6
465	427802.94	5409569.67	391.85	0	DEN	4000	51.5	22.1	0.0	0.0	0.0	79.4	86.6	-1.8	0.0	0.0	0.0	0.0	0.0	-90.6
465	427802.94	5409569.67	391.85	0	DEN	8000	42.6	22.1	0.0	0.0	0.0	79.4	308.7	-1.8	0.0	0.0	0.0	0.0	0.0	-321.6
466	426424.04	5409599.48	372.10	0	DEN	32	30.2	22.5	0.0	0.0	0.0	80.1	0.1	-5.7	0.0	0.0	4.8	0.0	0.0	-26.4
466	426424.04	5409599.48	372.10	0	DEN	63	48.1	22.5	0.0	0.0	0.0	80.1	0.3	-5.7	0.0	0.0	4.8	0.0	0.0	-8.8
466	426424.04	5409599.48	372.10	0	DEN	125	55.0	22.5	0.0	0.0	0.0	80.1	1.2	2.0	0.0	0.0	2.7	0.0	0.0	-8.4
466	426424.04	5409599.48	372.10	0	DEN	250	55.8	22.5	0.0	0.0	0.0	80.1	3.0	-0.4	0.0	0.0	4.8	0.0	0.0	-9.0
466	426424.04	5409599.48	372.10	0	DEN	500	59.2	22.5	0.0	0.0	0.0	80.1	5.5	-1.8	0.0	0.0	4.8	0.0	0.0	-6.8
466	426424.04	5409599.48	372.10	0	DEN	1000	58.6	22.5	0.0	0.0	0.0	80.1	10.4	-1.8	0.0	0.0	4.8	0.0	0.0	-12.3
466	426424.04	5409599.48	372.10	0	DEN	2000	56.4	22.5	0.0	0.0	0.0	80.1	27.4	-1.8	0.0	0.0	4.8	0.0	0.0	-31.5
466	426424.04	5409599.48	372.10	0	DEN	4000	51.5	22.5	0.0	0.0	0.0	80.1	93.0	-1.8	0.0	0.0	4.8	0.0	0.0	-102.0
466	426424.04	5409599.48	372.10	0	DEN	8000	42.6	22.5	0.0	0.0	0.0	80.1	331.9	-1.8	0.0	0.0	4.8	0.0	0.0	-349.7
467	426257.93	5409503.31	362.49	0	DEN	32	30.2	22.4	0.0	0.0	0.0	80.0	0.1	-5.7	0.0	0.0	4.8	0.0	0.0	-26.5
467	426257.93	5409503.31	362.49	0	DEN	63	48.1	22.4	0.0	0.0	0.0	80.0	0.3	-5.7	0.0	0.0	4.8	0.0	0.0	-8.9
467	426257.93	5409503.31	362.49	0	DEN	125	55.0	22.4	0.0	0.0	0.0	80.0	1.2	2.3	0.0	0.0	2.5	0.0	0.0	-8.5
467	426257.93	5409503.31	362.49	0	DEN	250	55.8	22.4	0.0	0.0	0.0	80.0	2.9	-0.2	0.0	0.0	4.8	0.0	0.0	-9.3
467	426257.93	5409503.31	362.49	0	DEN	500	59.2	22.4	0.0	0.0	0.0	80.0	5.4	-1.5	0.0	0.0	4.8	0.0	0.0	-7.0
467	426257.93	5409503.31	362.49	0	DEN	1000	58.6	22.4	0.0	0.0	0.0	80.0	10.3	-1.5	0.0	0.0	4.8	0.0	0.0	-12.5
467	426257.93	5409503.31	362.49	0	DEN	2000	56.4	22.4	0.0	0.0	0.0	80.0	27.2	-1.5	0.0	0.0	4.8	0.0	0.0	-31.6
467	426257.93	5409503.31	362.49	0	DEN	4000	51.5	22.4	0.0	0.0	0.0	80.0	92.3	-1.5	0.0	0.0	4.8	0.0	0.0	-101.6
467	426257.93	5409503.31	362.49	0	DEN	8000	42.6	22.4	0.0	0.0	0.0	80.0	329.1	-1.5	0.0	0.0	4.8	0.0	0.0	-347.4
476	426728.72	5409640.81	379.00	0	DEN	32	30.2	22.3	0.0	0.0	0.0	79.9	0.1	-5.7	0.0	0.0	4.8	0.0	0.0	-26.5
476	426728.72	5409640.81	379.00	0	DEN	63	48.1	22.3	0.0	0.0	0.0	79.9	0.3	-5.7	0.0	0.0	4.8	0.0	0.0	-8.9
476	426728.72	5409640.81	379.00	0	DEN	125	55.0	22.3	0.0	0.0	0.0	79.9	1.1	1.8	0.0	0.0	3.0	0.0	0.0	-8.5
476	426728.72	5409640.81	379.00	0	DEN	250	55.8	22.3	0.0	0.0	0.0	79.9	2.9	-0.7	0.0	0.0	4.8	0.0	0.0	-8.8
476	426728.72	5409640.81	379.00	0	DEN	500	59.2	22.3	0.0	0.0	0.0	79.9	5.4	-2.1	0.0	0.0	4.8	0.0	0.0	-6.5
476	426728.72	5409640.81	379.00	0	DEN	1000	58.6	22.3	0.0	0.0	0.0	79.9	10.2	-2.1	0.0	0.0	4.9	0.0	0.0	-12.0
476	426728.72	5409640.81	379.00	0	DEN	2000	56.4	22.3	0.0	0.0	0.0	79.9	26.9	-2.1	0.0	0.0	5.0	0.0	0.0	-31.0
476	426728.72	5409640.81	379.00	0	DEN	4000	51.5	22.3	0.0	0.0	0.0	79.9	91.2	-2.1	0.0	0.0	5.1	0.0	0.0	-100.4
476	426728.72	5409640.81	379.00	0	DEN	8000	42.6	22.3	0.0	0.0	0.0	79.9	325.4	-2.1	0.0	0.0	5.5	0.0	0.0	-343.8
481	425501.73	5409457.61	299.91	0	DEN	32	30.2	22.9	0.0	0.0	0.0	81.0	0.1	-5.8	0.0	0.0	5.2	0.0	0.0	-27.4
481	425501.73	5409457.61	299.91	0	DEN	63	48.1	22.9	0.0	0.0	0.0	81.0	0.4	-5.8	0.0	0.0	5.5	0.0	0.0	-10.2
481	425501.73	5409457.61	299.91	0	DEN	125	55.0	22.9	0.0	0.0	0.0	81.0	1.3	2.1	0.0	0.0	4.1	0.0	0.0	-10.6

Line Source, ISO 9613, Name: "TRE_OP-LGO", ID: ""																					
Nr.	X	Y	Z	Refl.	DEN	Freq.	Lw	l/a	Optime	K0	Dc	Adiv	Aatm	Agr	Afol	Ahous	Abar	Cmet	RL	Lr
	(m)	(m)	(m)			(Hz)	dB(A)	dB	dB	(dB)	(dB)	(dB)	(dB)	(dB)	(dB)	(dB)	(dB)	(dB)	(dB)	dB(A)
481	425501.73	5409457.61	299.91	0	DEN	250	55.8	22.9	0.0	0.0	0.0	81.0	3.3	-0.3	0.0	0.0	7.2	0.0	0.0	-12.6
481	425501.73	5409457.61	299.91	0	DEN	500	59.2	22.9	0.0	0.0	0.0	81.0	6.1	-1.7	0.0	0.0	8.8	0.0	0.0	-12.2
481	425501.73	5409457.61	299.91	0	DEN	1000	58.6	22.9	0.0	0.0	0.0	81.0	11.6	-1.7	0.0	0.0	10.9	0.0	0.0	-20.3
481	425501.73	5409457.61	299.91	0	DEN	2000	56.4	22.9	0.0	0.0	0.0	81.0	30.7	-1.7	0.0	0.0	13.3	0.0	0.0	-44.0
481	425501.73	5409457.61	299.91	0	DEN	4000	51.5	22.9	0.0	0.0	0.0	81.0	104.0	-1.7	0.0	0.0	16.0	0.0	0.0	-125.0
481	425501.73	5409457.61	299.91	0	DEN	8000	42.6	22.9	0.0	0.0	0.0	81.0	371.1	-1.7	0.0	0.0	18.9	0.0	0.0	-403.7
490	427438.12	5409740.24	392.57	0	DEN	32	30.2	21.6	0.0	0.0	0.0	79.9	0.1	-5.7	0.0	0.0	4.8	0.0	0.0	-27.3
490	427438.12	5409740.24	392.57	0	DEN	63	48.1	21.6	0.0	0.0	0.0	79.9	0.3	-5.7	0.0	0.0	4.8	0.0	0.0	-9.6
490	427438.12	5409740.24	392.57	0	DEN	125	55.0	21.6	0.0	0.0	0.0	79.9	1.1	1.3	0.0	0.0	3.5	0.0	0.0	-9.2
490	427438.12	5409740.24	392.57	0	DEN	250	55.8	21.6	0.0	0.0	0.0	79.9	2.9	-1.1	0.0	0.0	4.8	0.0	0.0	-9.1
490	427438.12	5409740.24	392.57	0	DEN	500	59.2	21.6	0.0	0.0	0.0	79.9	5.4	-2.5	0.0	0.0	4.8	0.0	0.0	-6.8
490	427438.12	5409740.24	392.57	0	DEN	1000	58.6	21.6	0.0	0.0	0.0	79.9	10.2	-2.5	0.0	0.0	4.8	0.0	0.0	-12.2
490	427438.12	5409740.24	392.57	0	DEN	2000	56.4	21.6	0.0	0.0	0.0	79.9	26.9	-2.5	0.0	0.0	4.8	0.0	0.0	-31.1
490	427438.12	5409740.24	392.57	0	DEN	4000	51.5	21.6	0.0	0.0	0.0	79.9	91.4	-2.5	0.0	0.0	4.8	0.0	0.0	-100.5
490	427438.12	5409740.24	392.57	0	DEN	8000	42.6	21.6	0.0	0.0	0.0	79.9	325.9	-2.5	0.0	0.0	4.8	0.0	0.0	-343.9
491	426581.95	5409592.33	378.07	0	DEN	32	30.2	21.6	0.0	0.0	0.0	79.9	0.1	-5.7	0.0	0.0	0.0	0.0	0.0	-22.5
491	426581.95	5409592.33	378.07	0	DEN	63	48.1	21.6	0.0	0.0	0.0	79.9	0.3	-5.7	0.0	0.0	0.0	0.0	0.0	-4.8
491	426581.95	5409592.33	378.07	0	DEN	125	55.0	21.6	0.0	0.0	0.0	79.9	1.1	3.1	0.0	0.0	0.0	0.0	0.0	-7.5
491	426581.95	5409592.33	378.07	0	DEN	250	55.8	21.6	0.0	0.0	0.0	79.9	2.9	0.3	0.0	0.0	0.0	0.0	0.0	-5.7
491	426581.95	5409592.33	378.07	0	DEN	500	59.2	21.6	0.0	0.0	0.0	79.9	5.4	-1.5	0.0	0.0	0.0	0.0	0.0	-3.0
491	426581.95	5409592.33	378.07	0	DEN	1000	58.6	21.6	0.0	0.0	0.0	79.9	10.2	-1.5	0.0	0.0	0.0	0.0	0.0	-8.4
491	426581.95	5409592.33	378.07	0	DEN	2000	56.4	21.6	0.0	0.0	0.0	79.9	26.9	-1.5	0.0	0.0	0.0	0.0	0.0	-27.3
491	426581.95	5409592.33	378.07	0	DEN	4000	51.5	21.6	0.0	0.0	0.0	79.9	91.1	-1.5	0.0	0.0	0.0	0.0	0.0	-96.4
491	426581.95	5409592.33	378.07	0	DEN	8000	42.6	21.6	0.0	0.0	0.0	79.9	324.9	-1.5	0.0	0.0	0.0	0.0	0.0	-339.1
498	426082.81	5409381.18	341.86	0	DEN	32	30.2	21.1	0.0	0.0	0.0	79.9	0.1	-5.7	0.0	0.0	4.8	0.0	0.0	-27.7
498	426082.81	5409381.18	341.86	0	DEN	63	48.1	21.1	0.0	0.0	0.0	79.9	0.3	-5.7	0.0	0.0	4.8	0.0	0.0	-10.1
498	426082.81	5409381.18	341.86	0	DEN	125	55.0	21.1	0.0	0.0	0.0	79.9	1.1	2.1	0.0	0.0	2.7	0.0	0.0	-9.7
498	426082.81	5409381.18	341.86	0	DEN	250	55.8	21.1	0.0	0.0	0.0	79.9	2.9	-0.3	0.0	0.0	4.8	0.0	0.0	-10.4
498	426082.81	5409381.18	341.86	0	DEN	500	59.2	21.1	0.0	0.0	0.0	79.9	5.4	-1.7	0.0	0.0	4.8	0.0	0.0	-8.1
498	426082.81	5409381.18	341.86	0	DEN	1000	58.6	21.1	0.0	0.0	0.0	79.9	10.2	-1.7	0.0	0.0	4.8	0.0	0.0	-13.5
498	426082.81	5409381.18	341.86	0	DEN	2000	56.4	21.1	0.0	0.0	0.0	79.9	26.9	-1.7	0.0	0.0	4.9	0.0	0.0	-32.5
498	426082.81	5409381.18	341.86	0	DEN	4000	51.5	21.1	0.0	0.0	0.0	79.9	91.3	-1.7	0.0	0.0	5.0	0.0	0.0	-101.9
498	426082.81	5409381.18	341.86	0	DEN	8000	42.6	21.1	0.0	0.0	0.0	79.9	325.8	-1.7	0.0	0.0	5.2	0.0	0.0	-345.5
500	427314.03	5409783.00	391.51	0	DEN	32	30.2	20.8	0.0	0.0	0.0	80.0	0.1	-5.7	0.0	0.0	4.8	0.0	0.0	-28.2
500	427314.03	5409783.00	391.51	0	DEN	63	48.1	20.8	0.0	0.0	0.0	80.0	0.3	-5.7	0.0	0.0	4.8	0.0	0.0	-10.5
500	427314.03	5409783.00	391.51	0	DEN	125	55.0	20.8	0.0	0.0	0.0	80.0	1.2	1.3	0.0	0.0	3.5	0.0	0.0	-10.2
500	427314.03	5409783.00	391.51	0	DEN	250	55.8	20.8	0.0	0.0	0.0	80.0	3.0	-1.2	0.0	0.0	4.8	0.0	0.0	-10.0
500	427314.03	5409783.00	391.51	0	DEN	500	59.2	20.8	0.0	0.0	0.0	80.0	5.5	-2.6	0.0	0.0	4.8	0.0	0.0	-7.7
500	427314.03	5409783.00	391.51	0	DEN	1000	58.6	20.8	0.0	0.0	0.0	80.0	10.4	-2.6	0.0	0.0	4.8	0.0	0.0	-13.2
500	427314.03	5409783.00	391.51	0	DEN	2000	56.4	20.8	0.0	0.0	0.0	80.0	27.4	-2.6	0.0	0.0	4.8	0.0	0.0	-32.4
500	427314.03	5409783.00	391.51	0	DEN	4000	51.5	20.8	0.0	0.0	0.0	80.0	92.9	-2.6	0.0	0.0	4.8	0.0	0.0	-102.8
500	427314.03	5409783.00	391.51	0	DEN	8000	42.6	20.8	0.0	0.0	0.0	80.0	331.3	-2.6	0.0	0.0	4.8	0.0	0.0	-350.1
504	426858.01	5409696.72	379.92	0	DEN	32	30.2	20.6	0.0	0.0	0.0	80.0	0.1	-5.7	0.0	0.0	0.0	0.0	0.0	-23.6
504	426858.01	5409696.72	379.92	0	DEN	63	48.1	20.6	0.0	0.0	0.0	80.0	0.3	-5.7	0.0	0.0	0.0	0.0	0.0	-5.9
504	426858.01	5409696.72	379.92	0	DEN	125	55.0	20.6	0.0	0.0	0.0	80.0	1.2	1.8	0.0	0.0	0.0	0.0	0.0	-7.3
504	426858.01	5409696.72	379.92	0	DEN	250	55.8	20.6	0.0	0.0	0.0	80.0	2.9	-0.7	0.0	0.0	0.0	0.0	0.0	-5.8
504	426858.01	5409696.72	379.92	0	DEN	500	59.2	20.6	0.0	0.0	0.0	80.0	5.4	-2.1	0.0	0.0	0.0	0.0	0.0	-3.5
504	426858.01	5409696.72	379.92	0	DEN	1000	58.6	20.6	0.0	0.0	0.0	80.0	10.3	-2.1	0.0	0.0	0.0	0.0	0.0	-9.0
504	426858.01	5409696.72	379.92	0	DEN	2000	56.4	20.6	0.0	0.0	0.0	80.0	27.1	-2.1	0.0	0.0	0.0	0.0	0.0	-28.0
504	426858.01	5409696.72	379.92	0	DEN	4000	51.5	20.6	0.0	0.0	0.0	80.0	92.0	-2.1	0.0	0.0	0.0	0.0	0.0	-97.8
504	426858.01	5409696.72	379.92	0	DEN	8000	42.6	20.6	0.0	0.0	0.0	80.0	328.2	-2.1	0.0	0.0	0.0	0.0	0.0	-342.9
514	426955.72	5409723.27	387.42	0	DEN	32	30.2	19.6	0.0	0.0	0.0	80.0	0.1	-5.7	0.0	0.0	0.0	0.0	0.0	-24.5
514	426955.72	5409723.27	387.42	0	DEN	63	48.1	19.6	0.0	0.0	0.0	80.0	0.3	-5.7	0.0	0.0	0.0	0.0	0.0	-6.9
514	426955.72	5409723.27	387.42	0	DEN	125	55.0	19.6	0.0	0.0	0.0	80.0	1.2	1.8	0.0	0.0	0.0	0.0	0.0	-8.3
514	426955.72	5409723.27	387.42	0	DEN	250	55.8	19.6	0.0	0.0	0.0	80.0	2.9	-0.7	0.0	0.0	0.0	0.0	0.0	-6.8
514	426955.72	5409723.27	387.42	0	DEN	500	59.2	19.6	0.0	0.0	0.0	80.0	5.4	-2.1	0.0	0.0	0.0	0.0	0.0	-4.5
514	426955.72	5409723.27	387.42	0	DEN	1000	58.6	19.6	0.0	0.0	0.0	80.0	10.3	-2.1	0.0	0.0	0.0	0.0	0.0	-10.0
514	426955.72	5409723.27	387.42	0	DEN	2000	56.4	19.6	0.0	0.0	0.0	80.0	27.2	-2.1	0.0	0.0	0.0	0.0	0.0	-29.1
514	426955.72	5409723.27	387.42	0	DEN	4000	51.5	19.6	0.0	0.0	0.0	80.0	92.3	-2.1	0.0	0.0	0.0	0.0	0.0	-99.0
514	426955.72	5409723.27	387.42	0	DEN	8000	42.6	19.6	0.0	0.0	0.0	80.0	329.0	-2.1	0.0	0.0	0.0	0.0	0.0	-344.7
515	426183.22	5409403.17	351.94	0	DEN	32	30.2	19.4	0.0	0.0	0.0	79.8	0.1	-5.7	0.0	0.0	4.8	0.0	0.0	-29.4
515	426183.22	5409403.17	351.94	0	DEN	63	48.1	19.4	0.0	0.0	0.0	79.8	0.3	-5.7	0.0	0.0	4.8	0.0	0.0	-11.7
515	426183.22	5409403.17	351.94	0	DEN	125	55.0	19.4	0.0	0.0	0.0	79.8	1.1	2.1	0.0	0.0	2.7	0.0	0.0	-11.4

Line Source, ISO 9613, Name: "TRE_OP-LGO", ID: ""																				
Nr.	X	Y	Z	Refl.	DEN	Freq.	Lw	l/a	Optime	K0	Dc	Adiv	Aatm	Agr	Afol	Ahous	Abar	Cmet	RL	Lr
	(m)	(m)	(m)			(Hz)	dB(A)	dB	dB	(dB)	(dB)	(dB)	(dB)	(dB)	(dB)	(dB)	(dB)	(dB)	(dB)	dB(A)
515	426183.22	5409403.17	351.94	0	DEN	250	55.8	19.4	0.0	0.0	0.0	79.8	2.9	-0.3	0.0	0.0	4.8	0.0	0.0	-12.0
515	426183.22	5409403.17	351.94	0	DEN	500	59.2	19.4	0.0	0.0	0.0	79.8	5.3	-1.7	0.0	0.0	4.9	0.0	0.0	-9.7
515	426183.22	5409403.17	351.94	0	DEN	1000	58.6	19.4	0.0	0.0	0.0	79.8	10.1	-1.7	0.0	0.0	5.1	0.0	0.0	-15.2
515	426183.22	5409403.17	351.94	0	DEN	2000	56.4	19.4	0.0	0.0	0.0	79.8	26.7	-1.7	0.0	0.0	5.3	0.0	0.0	-34.3
515	426183.22	5409403.17	351.94	0	DEN	4000	51.5	19.4	0.0	0.0	0.0	79.8	90.4	-1.7	0.0	0.0	5.8	0.0	0.0	-103.4
515	426183.22	5409403.17	351.94	0	DEN	8000	42.6	19.4	0.0	0.0	0.0	79.8	322.5	-1.7	0.0	0.0	6.6	0.0	0.0	-345.2
531	426316.48	5409600.28	366.28	0	DEN	32	30.2	17.5	0.0	0.0	0.0	80.2	0.1	-5.7	0.0	0.0	4.8	0.0	0.0	-31.6
531	426316.48	5409600.28	366.28	0	DEN	63	48.1	17.5	0.0	0.0	0.0	80.2	0.4	-5.7	0.0	0.0	4.8	0.0	0.0	-14.0
531	426316.48	5409600.28	366.28	0	DEN	125	55.0	17.5	0.0	0.0	0.0	80.2	1.2	5.0	0.0	0.0	0.0	0.0	0.0	-13.9
531	426316.48	5409600.28	366.28	0	DEN	250	55.8	17.5	0.0	0.0	0.0	80.2	3.0	1.5	0.0	0.0	3.3	0.0	0.0	-14.7
531	426316.48	5409600.28	366.28	0	DEN	500	59.2	17.5	0.0	0.0	0.0	80.2	5.6	-0.9	0.0	0.0	4.8	0.0	0.0	-12.9
531	426316.48	5409600.28	366.28	0	DEN	1000	58.6	17.5	0.0	0.0	0.0	80.2	10.5	-0.9	0.0	0.0	4.8	0.0	0.0	-18.5
531	426316.48	5409600.28	366.28	0	DEN	2000	56.4	17.5	0.0	0.0	0.0	80.2	27.8	-0.9	0.0	0.0	4.8	0.0	0.0	-38.0
531	426316.48	5409600.28	366.28	0	DEN	4000	51.5	17.5	0.0	0.0	0.0	80.2	94.4	-0.9	0.0	0.0	4.8	0.0	0.0	-109.4
531	426316.48	5409600.28	366.28	0	DEN	8000	42.6	17.5	0.0	0.0	0.0	80.2	336.7	-0.9	0.0	0.0	4.8	0.0	0.0	-360.6

Line Source, ISO 9613, Name: "MGR_OB", ID: ""																				
Nr.	X	Y	Z	Refl.	DEN	Freq.	Lw	l/a	Optime	K0	Dc	Adiv	Aatm	Agr	Afol	Ahous	Abar	Cmet	RL	Lr
	(m)	(m)	(m)			(Hz)	dB(A)	dB	dB	(dB)	(dB)	(dB)	(dB)	(dB)	(dB)	(dB)	(dB)	(dB)	(dB)	dB(A)
197	424882.86	5409587.72	350.54	0	DEN	32	29.1	26.3	0.0	0.0	0.0	82.3	0.1	-5.8	0.0	0.0	4.8	0.0	0.0	-26.0
197	424882.86	5409587.72	350.54	0	DEN	63	46.6	26.3	0.0	0.0	0.0	82.3	0.4	-5.8	0.0	0.0	4.8	0.0	0.0	-8.8
197	424882.86	5409587.72	350.54	0	DEN	125	58.3	26.3	0.0	0.0	0.0	82.3	1.5	2.2	0.0	0.0	2.6	0.0	0.0	-4.0
197	424882.86	5409587.72	350.54	0	DEN	250	60.9	26.3	0.0	0.0	0.0	82.3	3.8	-0.3	0.0	0.0	4.8	0.0	0.0	-3.4
197	424882.86	5409587.72	350.54	0	DEN	500	65.1	26.3	0.0	0.0	0.0	82.3	7.1	-1.7	0.0	0.0	4.8	0.0	0.0	-1.1
197	424882.86	5409587.72	350.54	0	DEN	1000	65.6	26.3	0.0	0.0	0.0	82.3	13.5	-1.7	0.0	0.0	4.8	0.0	0.0	-6.9
197	424882.86	5409587.72	350.54	0	DEN	2000	64.3	26.3	0.0	0.0	0.0	82.3	35.6	-1.7	0.0	0.0	4.8	0.0	0.0	-30.3
197	424882.86	5409587.72	350.54	0	DEN	4000	60.4	26.3	0.0	0.0	0.0	82.3	120.6	-1.7	0.0	0.0	4.8	0.0	0.0	-119.2
197	424882.86	5409587.72	350.54	0	DEN	8000	55.1	26.3	0.0	0.0	0.0	82.3	430.0	-1.7	0.0	0.0	4.8	0.0	0.0	-434.0
203	425584.45	5409336.16	338.66	0	DEN	32	29.1	24.7	0.0	0.0	0.0	80.6	0.1	-5.7	0.0	0.0	4.8	0.0	0.0	-25.9
203	425584.45	5409336.16	338.66	0	DEN	63	46.6	24.7	0.0	0.0	0.0	80.6	0.4	-5.7	0.0	0.0	4.8	0.0	0.0	-8.7
203	425584.45	5409336.16	338.66	0	DEN	125	58.3	24.7	0.0	0.0	0.0	80.6	1.2	2.3	0.0	0.0	2.5	0.0	0.0	-3.6
203	425584.45	5409336.16	338.66	0	DEN	250	60.9	24.7	0.0	0.0	0.0	80.6	3.2	-0.2	0.0	0.0	4.8	0.0	0.0	-2.8
203	425584.45	5409336.16	338.66	0	DEN	500	65.1	24.7	0.0	0.0	0.0	80.6	5.8	-1.6	0.0	0.0	4.8	0.0	0.0	0.2
203	425584.45	5409336.16	338.66	0	DEN	1000	65.6	24.7	0.0	0.0	0.0	80.6	11.1	-1.6	0.0	0.0	4.8	0.0	0.0	-4.6
203	425584.45	5409336.16	338.66	0	DEN	2000	64.3	24.7	0.0	0.0	0.0	80.6	29.3	-1.6	0.0	0.0	4.8	0.0	0.0	-24.1
203	425584.45	5409336.16	338.66	0	DEN	4000	60.4	24.7	0.0	0.0	0.0	80.6	99.2	-1.6	0.0	0.0	4.8	0.0	0.0	-97.9
203	425584.45	5409336.16	338.66	0	DEN	8000	55.1	24.7	0.0	0.0	0.0	80.6	353.8	-1.6	0.0	0.0	4.8	0.0	0.0	-357.9
206	424344.42	5410176.96	360.56	0	DEN	32	29.1	27.6	0.0	0.0	0.0	84.0	0.1	-5.8	0.0	0.0	0.0	0.0	0.0	-21.6
206	424344.42	5410176.96	360.56	0	DEN	63	46.6	27.6	0.0	0.0	0.0	84.0	0.5	-5.8	0.0	0.0	0.0	0.0	0.0	-4.5
206	424344.42	5410176.96	360.56	0	DEN	125	58.3	27.6	0.0	0.0	0.0	84.0	1.8	1.7	0.0	0.0	0.0	0.0	0.0	-1.6
206	424344.42	5410176.96	360.56	0	DEN	250	60.9	27.6	0.0	0.0	0.0	84.0	4.7	-0.8	0.0	0.0	0.0	0.0	0.0	0.6
206	424344.42	5410176.96	360.56	0	DEN	500	65.1	27.6	0.0	0.0	0.0	84.0	8.6	-2.2	0.0	0.0	0.0	0.0	0.0	2.3
206	424344.42	5410176.96	360.56	0	DEN	1000	65.6	27.6	0.0	0.0	0.0	84.0	16.4	-2.2	0.0	0.0	0.0	0.0	0.0	-5.0
206	424344.42	5410176.96	360.56	0	DEN	2000	64.3	27.6	0.0	0.0	0.0	84.0	43.3	-2.2	0.0	0.0	0.0	0.0	0.0	-33.2
206	424344.42	5410176.96	360.56	0	DEN	4000	60.4	27.6	0.0	0.0	0.0	84.0	146.7	-2.2	0.0	0.0	0.0	0.0	0.0	-140.5
206	424344.42	5410176.96	360.56	0	DEN	8000	55.1	27.6	0.0	0.0	0.0	84.0	523.3	-2.2	0.0	0.0	0.0	0.0	0.0	-522.4
214	425299.74	5409343.89	349.02	0	DEN	32	29.1	24.5	0.0	0.0	0.0	81.1	0.1	-5.8	0.0	0.0	4.8	0.0	0.0	-26.7
214	425299.74	5409343.89	349.02	0	DEN	63	46.6	24.5	0.0	0.0	0.0	81.1	0.4	-5.8	0.0	0.0	4.8	0.0	0.0	-9.5
214	425299.74	5409343.89	349.02	0	DEN	125	58.3	24.5	0.0	0.0	0.0	81.1	1.3	4.7	0.0	0.0	0.1	0.0	0.0	-4.5
214	425299.74	5409343.89	349.02	0	DEN	250	60.9	24.5	0.0	0.0	0.0	81.1	3.4	1.4	0.0	0.0	3.4	0.0	0.0	-3.9
214	425299.74	5409343.89	349.02	0	DEN	500	65.1	24.5	0.0	0.0	0.0	81.1	6.2	-0.9	0.0	0.0	4.8	0.0	0.0	-1.7
214	425299.74	5409343.89	349.02	0	DEN	1000	65.6	24.5	0.0	0.0	0.0	81.1	11.8	-0.9	0.0	0.0	4.8	0.0	0.0	-6.8
214	425299.74	5409343.89	349.02	0	DEN	2000	64.3	24.5	0.0	0.0	0.0	81.1	31.1	-0.9	0.0	0.0	4.8	0.0	0.0	-27.4
214	425299.74	5409343.89	349.02	0	DEN	4000	60.4	24.5	0.0	0.0	0.0	81.1	105.4	-0.9	0.0	0.0	4.8	0.0	0.0	-105.6
214	425299.74	5409343.89	349.02	0	DEN	8000	55.1	24.5	0.0	0.0	0.0	81.1	375.9	-0.9	0.0	0.0	4.8	0.0	0.0	-381.4
230	425705.23	5409422.07	317.83	0	DEN	32	29.1	23.6	0.0	0.0	0.0	80.6	0.1	-5.7	0.0	0.0	4.8	0.0	0.0	-27.1
230	425705.23	5409422.07	317.83	0	DEN	63	46.6	23.6	0.0	0.0	0.0	80.6	0.4	-5.7	0.0	0.0	4.8	0.0	0.0	-9.8
230	425705.23	5409422.07	317.83	0	DEN	125	58.3	23.6	0.0	0.0	0.0	80.6	1.2	2.2	0.0	0.0	2.6	0.0	0.0	-4.8
230	425705.23	5409422.07	317.83	0	DEN	250	60.9	23.6	0.0	0.0	0.0	80.6	3.2	-0.3	0.0	0.0	4.9	0.0	0.0	-3.9
230	425705.23	5409422.07	317.83	0	DEN	500	65.1	23.6	0.0	0.0	0.0	80.6	5.8	-1.6	0.0	0.0	4.9	0.0	0.0	-1.1
230	425705.23	5409422.07	317.83	0	DEN	1000	65.6	23.6	0.0	0.0	0.0	80.6	11.1	-1.6	0.0	0.0	5.1	0.0	0.0	-5.9
230	425705.23	5409422.07	317.83	0	DEN	2000	64.3	23.6	0.0	0.0	0.0	80.6	29.2	-1.6	0.0	0.0	5.4	0.0	0.0	-25.7
230	425705.23	5409422.07	317.83	0	DEN	4000	60.4	23.6	0.0	0.0	0.0	80.6	99.1	-1.6	0.0	0.0	5.9	0.0	0.0	-100.0

Line Source, ISO 9613, Name: "MGR_OB", ID: ""																				
Nr.	X	Y	Z	Refl.	DEN	Freq.	Lw	l/a	Optime	K0	Dc	Adiv	Aatm	Agr	Afol	Ahous	Abar	Cmet	RL	Lr
	(m)	(m)	(m)			(Hz)	dB(A)	dB	dB	(dB)	(dB)	(dB)	(dB)	(dB)	(dB)	(dB)	(dB)	(dB)	(dB)	dB(A)
230	425705.23	5409422.07	317.83	0	DEN	8000	55.1	23.6	0.0	0.0	0.0	80.6	353.5	-1.6	0.0	0.0	6.8	0.0	0.0	-360.6
278	425499.98	5409457.87	299.87	0	DEN	32	29.1	22.8	0.0	0.0	0.0	81.0	0.1	-5.8	0.0	0.0	5.2	0.0	0.0	-28.6
278	425499.98	5409457.87	299.87	0	DEN	63	46.6	22.8	0.0	0.0	0.0	81.0	0.4	-5.8	0.0	0.0	5.5	0.0	0.0	-11.8
278	425499.98	5409457.87	299.87	0	DEN	125	58.3	22.8	0.0	0.0	0.0	81.0	1.3	2.2	0.0	0.0	4.0	0.0	0.0	-7.4
278	425499.98	5409457.87	299.87	0	DEN	250	60.9	22.8	0.0	0.0	0.0	81.0	3.3	-0.3	0.0	0.0	7.2	0.0	0.0	-7.6
278	425499.98	5409457.87	299.87	0	DEN	500	65.1	22.8	0.0	0.0	0.0	81.0	6.1	-1.7	0.0	0.0	8.8	0.0	0.0	-6.3
278	425499.98	5409457.87	299.87	0	DEN	1000	65.6	22.8	0.0	0.0	0.0	81.0	11.6	-1.7	0.0	0.0	10.8	0.0	0.0	-13.4
278	425499.98	5409457.87	299.87	0	DEN	2000	64.3	22.8	0.0	0.0	0.0	81.0	30.7	-1.7	0.0	0.0	13.3	0.0	0.0	-36.2
278	425499.98	5409457.87	299.87	0	DEN	4000	60.4	22.8	0.0	0.0	0.0	81.0	104.1	-1.7	0.0	0.0	16.0	0.0	0.0	-116.1
278	425499.98	5409457.87	299.87	0	DEN	8000	55.1	22.8	0.0	0.0	0.0	81.0	371.2	-1.7	0.0	0.0	18.8	0.0	0.0	-391.4
303	424642.58	5409858.65	354.60	0	DEN	32	29.1	24.8	0.0	0.0	0.0	83.1	0.1	-5.8	0.0	0.0	4.8	0.0	0.0	-28.4
303	424642.58	5409858.65	354.60	0	DEN	63	46.6	24.8	0.0	0.0	0.0	83.1	0.5	-5.8	0.0	0.0	4.8	0.0	0.0	-11.2
303	424642.58	5409858.65	354.60	0	DEN	125	58.3	24.8	0.0	0.0	0.0	83.1	1.7	2.0	0.0	0.0	2.7	0.0	0.0	-6.5
303	424642.58	5409858.65	354.60	0	DEN	250	60.9	24.8	0.0	0.0	0.0	83.1	4.2	-0.5	0.0	0.0	4.8	0.0	0.0	-6.0
303	424642.58	5409858.65	354.60	0	DEN	500	65.1	24.8	0.0	0.0	0.0	83.1	7.8	-1.9	0.0	0.0	4.8	0.0	0.0	-3.9
303	424642.58	5409858.65	354.60	0	DEN	1000	65.6	24.8	0.0	0.0	0.0	83.1	14.8	-1.9	0.0	0.0	4.8	0.0	0.0	-10.4
303	424642.58	5409858.65	354.60	0	DEN	2000	64.3	24.8	0.0	0.0	0.0	83.1	39.1	-1.9	0.0	0.0	4.8	0.0	0.0	-36.0
303	424642.58	5409858.65	354.60	0	DEN	4000	60.4	24.8	0.0	0.0	0.0	83.1	132.4	-1.9	0.0	0.0	4.8	0.0	0.0	-133.3
303	424642.58	5409858.65	354.60	0	DEN	8000	55.1	24.8	0.0	0.0	0.0	83.1	472.3	-1.9	0.0	0.0	4.8	0.0	0.0	-478.5
357	425100.99	5409404.00	349.02	0	DEN	32	29.1	21.5	0.0	0.0	0.0	81.6	0.1	-5.8	0.0	0.0	4.8	0.0	0.0	-30.1
357	425100.99	5409404.00	349.02	0	DEN	63	46.6	21.5	0.0	0.0	0.0	81.6	0.4	-5.8	0.0	0.0	4.8	0.0	0.0	-12.9
357	425100.99	5409404.00	349.02	0	DEN	125	58.3	21.5	0.0	0.0	0.0	81.6	1.4	3.0	0.0	0.0	1.8	0.0	0.0	-7.9
357	425100.99	5409404.00	349.02	0	DEN	250	60.9	21.5	0.0	0.0	0.0	81.6	3.5	0.3	0.0	0.0	4.4	0.0	0.0	-7.5
357	425100.99	5409404.00	349.02	0	DEN	500	65.1	21.5	0.0	0.0	0.0	81.6	6.5	-1.3	0.0	0.0	4.8	0.0	0.0	-5.0
357	425100.99	5409404.00	349.02	0	DEN	1000	65.6	21.5	0.0	0.0	0.0	81.6	12.4	-1.3	0.0	0.0	4.8	0.0	0.0	-10.3
357	425100.99	5409404.00	349.02	0	DEN	2000	64.3	21.5	0.0	0.0	0.0	81.6	32.8	-1.3	0.0	0.0	4.8	0.0	0.0	-32.0
357	425100.99	5409404.00	349.02	0	DEN	4000	60.4	21.5	0.0	0.0	0.0	81.6	111.3	-1.3	0.0	0.0	4.8	0.0	0.0	-114.4
357	425100.99	5409404.00	349.02	0	DEN	8000	55.1	21.5	0.0	0.0	0.0	81.6	396.9	-1.3	0.0	0.0	4.8	0.0	0.0	-405.3
383	425776.63	5409373.74	328.24	0	DEN	32	29.1	20.0	0.0	0.0	0.0	80.4	0.1	-5.7	0.0	0.0	4.8	0.0	0.0	-30.4
383	425776.63	5409373.74	328.24	0	DEN	63	46.6	20.0	0.0	0.0	0.0	80.4	0.4	-5.7	0.0	0.0	4.8	0.0	0.0	-13.2
383	425776.63	5409373.74	328.24	0	DEN	125	58.3	20.0	0.0	0.0	0.0	80.4	1.2	2.3	0.0	0.0	2.5	0.0	0.0	-8.1
383	425776.63	5409373.74	328.24	0	DEN	250	60.9	20.0	0.0	0.0	0.0	80.4	3.1	-0.2	0.0	0.0	4.8	0.0	0.0	-7.2
383	425776.63	5409373.74	328.24	0	DEN	500	65.1	20.0	0.0	0.0	0.0	80.4	5.7	-1.6	0.0	0.0	4.9	0.0	0.0	-4.3
383	425776.63	5409373.74	328.24	0	DEN	1000	65.6	20.0	0.0	0.0	0.0	80.4	10.8	-1.6	0.0	0.0	5.1	0.0	0.0	-9.0
383	425776.63	5409373.74	328.24	0	DEN	2000	64.3	20.0	0.0	0.0	0.0	80.4	28.4	-1.6	0.0	0.0	5.3	0.0	0.0	-28.3
383	425776.63	5409373.74	328.24	0	DEN	4000	60.4	20.0	0.0	0.0	0.0	80.4	96.5	-1.6	0.0	0.0	5.8	0.0	0.0	-100.7
383	425776.63	5409373.74	328.24	0	DEN	8000	55.1	20.0	0.0	0.0	0.0	80.4	344.1	-1.6	0.0	0.0	6.7	0.0	0.0	-354.5
398	424083.09	5410477.06	364.00	0	DEN	32	29.1	23.6	0.0	0.0	0.0	84.8	0.2	-5.8	0.0	0.0	0.0	0.0	0.0	-26.3
398	424083.09	5410477.06	364.00	0	DEN	63	46.6	23.6	0.0	0.0	0.0	84.8	0.6	-5.8	0.0	0.0	0.0	0.0	0.0	-9.3
398	424083.09	5410477.06	364.00	0	DEN	125	58.3	23.6	0.0	0.0	0.0	84.8	2.0	1.4	0.0	0.0	0.0	0.0	0.0	-6.2
398	424083.09	5410477.06	364.00	0	DEN	250	60.9	23.6	0.0	0.0	0.0	84.8	5.1	-1.0	0.0	0.0	0.0	0.0	0.0	-4.3
398	424083.09	5410477.06	364.00	0	DEN	500	65.1	23.6	0.0	0.0	0.0	84.8	9.4	-2.4	0.0	0.0	0.0	0.0	0.0	-3.0
398	424083.09	5410477.06	364.00	0	DEN	1000	65.6	23.6	0.0	0.0	0.0	84.8	17.8	-2.4	0.0	0.0	0.0	0.0	0.0	-10.9
398	424083.09	5410477.06	364.00	0	DEN	2000	64.3	23.6	0.0	0.0	0.0	84.8	47.1	-2.4	0.0	0.0	0.0	0.0	0.0	-41.5
398	424083.09	5410477.06	364.00	0	DEN	4000	60.4	23.6	0.0	0.0	0.0	84.8	159.7	-2.4	0.0	0.0	0.0	0.0	0.0	-158.1
398	424083.09	5410477.06	364.00	0	DEN	8000	55.1	23.6	0.0	0.0	0.0	84.8	569.8	-2.4	0.0	0.0	0.0	0.0	0.0	-573.4
473	424247.40	5410755.82	364.00	0	DEN	32	29.1	20.9	0.0	0.0	0.0	84.9	0.2	-5.8	0.0	0.0	0.0	0.0	0.0	-29.2
473	424247.40	5410755.82	364.00	0	DEN	63	46.6	20.9	0.0	0.0	0.0	84.9	0.6	-5.8	0.0	0.0	0.0	0.0	0.0	-12.2
473	424247.40	5410755.82	364.00	0	DEN	125	58.3	20.9	0.0	0.0	0.0	84.9	2.0	1.2	0.0	0.0	0.0	0.0	0.0	-8.9
473	424247.40	5410755.82	364.00	0	DEN	250	60.9	20.9	0.0	0.0	0.0	84.9	5.2	-1.2	0.0	0.0	0.0	0.0	0.0	-7.1
473	424247.40	5410755.82	364.00	0	DEN	500	65.1	20.9	0.0	0.0	0.0	84.9	9.6	-2.6	0.0	0.0	0.0	0.0	0.0	-5.9
473	424247.40	5410755.82	364.00	0	DEN	1000	65.6	20.9	0.0	0.0	0.0	84.9	18.2	-2.6	0.0	0.0	0.0	0.0	0.0	-14.0
473	424247.40	5410755.82	364.00	0	DEN	2000	64.3	20.9	0.0	0.0	0.0	84.9	48.1	-2.6	0.0	0.0	0.0	0.0	0.0	-45.1
473	424247.40	5410755.82	364.00	0	DEN	4000	60.4	20.9	0.0	0.0	0.0	84.9	162.9	-2.6	0.0	0.0	0.0	0.0	0.0	-163.9
473	424247.40	5410755.82	364.00	0	DEN	8000	55.1	20.9	0.0	0.0	0.0	84.9	581.2	-2.6	0.0	0.0	0.0	0.0	0.0	-587.5
477	424153.08	5410680.04	364.00	0	DEN	32	29.1	20.9	0.0	0.0	0.0	84.9	0.2	-5.8	0.0	0.0	0.0	0.0	0.0	-29.3
477	424153.08	5410680.04	364.00	0	DEN	63	46.6	20.9	0.0	0.0	0.0	84.9	0.6	-5.8	0.0	0.0	0.0	0.0	0.0	-12.2
477	424153.08	5410680.04	364.00	0	DEN	125	58.3	20.9	0.0	0.0	0.0	84.9	2.0	1.3	0.0	0.0	0.0	0.0	0.0	-9.1
477	424153.08	5410680.04	364.00	0	DEN	250	60.9	20.9	0.0	0.0	0.0	84.9	5.2	-1.2	0.0	0.0	0.0	0.0	0.0	-7.2
477	424153.08	5410680.04	364.00	0	DEN	500	65.1	20.9	0.0	0.0	0.0	84.9	9.6	-2.5	0.0	0.0	0.0	0.0	0.0	-6.0
477	424153.08	5410680.04	364.00	0	DEN	1000	65.6	20.9	0.0	0.0	0.0	84.9	18.2	-2.5	0.0	0.0	0.0	0.0	0.0	-14.1
477	424153.08	5410680.04	364.00	0	DEN	2000	64.3	20.9	0.0	0.0	0.0	84.9	48.1	-2.5	0.0	0.0	0.0	0.0	0.0	-45.3
477	424153.08	5410680.04	364.00	0	DEN	4000	60.4	20.9	0.0	0.0	0.0	84.9	163.1	-2.5	0.0	0.0	0.0	0.0	0.0	-164.2

Line Source, ISO 9613, Name: "MGR_OB", ID: ""																				
Nr.	X	Y	Z	Refl.	DEN	Freq.	Lw	l/a	Optime	K0	Dc	Adiv	Aatm	Agr	Afol	Ahous	Abar	Cmet	RL	Lr
	(m)	(m)	(m)			(Hz)	dB(A)	dB	dB	(dB)	(dB)	(dB)	(dB)	(dB)	(dB)	(dB)	(dB)	(dB)	(dB)	dB(A)
477	424153.08	5410680.04	364.00	0	DEN	8000	55.1	20.9	0.0	0.0	0.0	84.9	581.7	-2.5	0.0	0.0	0.0	0.0	0.0	-588.1
484	424354.98	5410780.20	364.00	0	DEN	32	29.1	20.3	0.0	0.0	0.0	84.8	0.2	-5.8	0.0	0.0	0.0	0.0	0.0	-29.7
484	424354.98	5410780.20	364.00	0	DEN	63	46.6	20.3	0.0	0.0	0.0	84.8	0.6	-5.8	0.0	0.0	0.0	0.0	0.0	-12.7
484	424354.98	5410780.20	364.00	0	DEN	125	58.3	20.3	0.0	0.0	0.0	84.8	2.0	1.2	0.0	0.0	0.0	0.0	0.0	-9.4
484	424354.98	5410780.20	364.00	0	DEN	250	60.9	20.3	0.0	0.0	0.0	84.8	5.1	-1.3	0.0	0.0	0.0	0.0	0.0	-7.5
484	424354.98	5410780.20	364.00	0	DEN	500	65.1	20.3	0.0	0.0	0.0	84.8	9.5	-2.7	0.0	0.0	0.0	0.0	0.0	-6.3
484	424354.98	5410780.20	364.00	0	DEN	1000	65.6	20.3	0.0	0.0	0.0	84.8	18.0	-2.7	0.0	0.0	0.0	0.0	0.0	-14.3
484	424354.98	5410780.20	364.00	0	DEN	2000	64.3	20.3	0.0	0.0	0.0	84.8	47.6	-2.7	0.0	0.0	0.0	0.0	0.0	-45.1
484	424354.98	5410780.20	364.00	0	DEN	4000	60.4	20.3	0.0	0.0	0.0	84.8	161.3	-2.7	0.0	0.0	0.0	0.0	0.0	-162.8
484	424354.98	5410780.20	364.00	0	DEN	8000	55.1	20.3	0.0	0.0	0.0	84.8	575.4	-2.7	0.0	0.0	0.0	0.0	0.0	-582.1
517	424087.26	5410622.11	364.00	0	DEN	32	29.1	17.5	0.0	0.0	0.0	84.9	0.2	-5.8	0.0	0.0	0.0	0.0	0.0	-32.6
517	424087.26	5410622.11	364.00	0	DEN	63	46.6	17.5	0.0	0.0	0.0	84.9	0.6	-5.8	0.0	0.0	0.0	0.0	0.0	-15.6
517	424087.26	5410622.11	364.00	0	DEN	125	58.3	17.5	0.0	0.0	0.0	84.9	2.0	1.4	0.0	0.0	0.0	0.0	0.0	-12.5
517	424087.26	5410622.11	364.00	0	DEN	250	60.9	17.5	0.0	0.0	0.0	84.9	5.2	-1.1	0.0	0.0	0.0	0.0	0.0	-10.6
517	424087.26	5410622.11	364.00	0	DEN	500	65.1	17.5	0.0	0.0	0.0	84.9	9.6	-2.5	0.0	0.0	0.0	0.0	0.0	-9.4
517	424087.26	5410622.11	364.00	0	DEN	1000	65.6	17.5	0.0	0.0	0.0	84.9	18.2	-2.5	0.0	0.0	0.0	0.0	0.0	-17.5
517	424087.26	5410622.11	364.00	0	DEN	2000	64.3	17.5	0.0	0.0	0.0	84.9	48.1	-2.5	0.0	0.0	0.0	0.0	0.0	-48.7
517	424087.26	5410622.11	364.00	0	DEN	4000	60.4	17.5	0.0	0.0	0.0	84.9	163.1	-2.5	0.0	0.0	0.0	0.0	0.0	-167.6
517	424087.26	5410622.11	364.00	0	DEN	8000	55.1	17.5	0.0	0.0	0.0	84.9	581.8	-2.5	0.0	0.0	0.0	0.0	0.0	-591.6
529	425819.99	5409402.62	327.35	0	DEN	32	29.1	11.4	0.0	0.0	0.0	80.4	0.1	-5.7	0.0	0.0	4.8	0.0	0.0	-39.0
529	425819.99	5409402.62	327.35	0	DEN	63	46.6	11.4	0.0	0.0	0.0	80.4	0.4	-5.7	0.0	0.0	4.8	0.0	0.0	-21.7
529	425819.99	5409402.62	327.35	0	DEN	125	58.3	11.4	0.0	0.0	0.0	80.4	1.2	2.2	0.0	0.0	2.6	0.0	0.0	-16.6
529	425819.99	5409402.62	327.35	0	DEN	250	60.9	11.4	0.0	0.0	0.0	80.4	3.1	-0.2	0.0	0.0	4.8	0.0	0.0	-15.7
529	425819.99	5409402.62	327.35	0	DEN	500	65.1	11.4	0.0	0.0	0.0	80.4	5.7	-1.6	0.0	0.0	4.8	0.0	0.0	-12.7
529	425819.99	5409402.62	327.35	0	DEN	1000	65.6	11.4	0.0	0.0	0.0	80.4	10.8	-1.6	0.0	0.0	4.8	0.0	0.0	-17.3
529	425819.99	5409402.62	327.35	0	DEN	2000	64.3	11.4	0.0	0.0	0.0	80.4	28.4	-1.6	0.0	0.0	4.8	0.0	0.0	-36.3
529	425819.99	5409402.62	327.35	0	DEN	4000	60.4	11.4	0.0	0.0	0.0	80.4	96.5	-1.6	0.0	0.0	4.9	0.0	0.0	-108.3
529	425819.99	5409402.62	327.35	0	DEN	8000	55.1	11.4	0.0	0.0	0.0	80.4	344.0	-1.6	0.0	0.0	5.0	0.0	0.0	-361.3
532	424049.21	5410596.41	364.00	0	DEN	32	29.1	15.6	0.0	0.0	0.0	85.0	0.2	-5.8	0.0	0.0	0.0	0.0	0.0	-34.5
532	424049.21	5410596.41	364.00	0	DEN	63	46.6	15.6	0.0	0.0	0.0	85.0	0.6	-5.8	0.0	0.0	0.0	0.0	0.0	-17.5
532	424049.21	5410596.41	364.00	0	DEN	125	58.3	15.6	0.0	0.0	0.0	85.0	2.0	1.3	0.0	0.0	0.0	0.0	0.0	-14.4
532	424049.21	5410596.41	364.00	0	DEN	250	60.9	15.6	0.0	0.0	0.0	85.0	5.2	-1.1	0.0	0.0	0.0	0.0	0.0	-12.5
532	424049.21	5410596.41	364.00	0	DEN	500	65.1	15.6	0.0	0.0	0.0	85.0	9.6	-2.5	0.0	0.0	0.0	0.0	0.0	-11.3
532	424049.21	5410596.41	364.00	0	DEN	1000	65.6	15.6	0.0	0.0	0.0	85.0	18.2	-2.5	0.0	0.0	0.0	0.0	0.0	-19.5
532	424049.21	5410596.41	364.00	0	DEN	2000	64.3	15.6	0.0	0.0	0.0	85.0	48.2	-2.5	0.0	0.0	0.0	0.0	0.0	-50.7
532	424049.21	5410596.41	364.00	0	DEN	4000	60.4	15.6	0.0	0.0	0.0	85.0	163.3	-2.5	0.0	0.0	0.0	0.0	0.0	-169.8
532	424049.21	5410596.41	364.00	0	DEN	8000	55.1	15.6	0.0	0.0	0.0	85.0	582.6	-2.5	0.0	0.0	0.0	0.0	0.0	-594.4

Line Source, ISO 9613, Name: "TRE_OP-NPAG", ID: ""																				
Nr.	X	Y	Z	Refl.	DEN	Freq.	Lw	l/a	Optime	K0	Dc	Adiv	Aatm	Agr	Afol	Ahous	Abar	Cmet	RL	Lr
	(m)	(m)	(m)			(Hz)	dB(A)	dB	dB	(dB)	(dB)	(dB)	(dB)	(dB)	(dB)	(dB)	(dB)	(dB)	(dB)	dB(A)
219	425584.38	5409336.42	338.65	0	D	32	35.9	24.7	0.0	0.0	0.0	80.6	0.1	-5.7	0.0	0.0	4.8	0.0	0.0	-19.1
219	425584.38	5409336.42	338.65	0	D	63	53.8	24.7	0.0	0.0	0.0	80.6	0.4	-5.7	0.0	0.0	4.8	0.0	0.0	-1.5
219	425584.38	5409336.42	338.65	0	D	125	60.7	24.7	0.0	0.0	0.0	80.6	1.2	2.3	0.0	0.0	2.5	0.0	0.0	-1.2
219	425584.38	5409336.42	338.65	0	D	250	61.5	24.7	0.0	0.0	0.0	80.6	3.2	-0.2	0.0	0.0	4.8	0.0	0.0	-2.2
219	425584.38	5409336.42	338.65	0	D	500	64.9	24.7	0.0	0.0	0.0	80.6	5.8	-1.6	0.0	0.0	4.8	0.0	0.0	-0.1
219	425584.38	5409336.42	338.65	0	D	1000	64.3	24.7	0.0	0.0	0.0	80.6	11.1	-1.6	0.0	0.0	4.8	0.0	0.0	-5.9
219	425584.38	5409336.42	338.65	0	D	2000	62.1	24.7	0.0	0.0	0.0	80.6	29.3	-1.6	0.0	0.0	4.8	0.0	0.0	-26.3
219	425584.38	5409336.42	338.65	0	D	4000	57.2	24.7	0.0	0.0	0.0	80.6	99.2	-1.6	0.0	0.0	4.8	0.0	0.0	-101.2
219	425584.38	5409336.42	338.65	0	D	8000	48.3	24.7	0.0	0.0	0.0	80.6	353.9	-1.6	0.0	0.0	4.8	0.0	0.0	-364.7
219	425584.38	5409336.42	338.65	0	N	32	35.9	24.7	0.0	0.0	0.0	80.6	0.1	-5.7	0.0	0.0	4.8	0.0	0.0	-19.1
219	425584.38	5409336.42	338.65	0	N	63	53.8	24.7	0.0	0.0	0.0	80.6	0.4	-5.7	0.0	0.0	4.8	0.0	0.0	-1.5
219	425584.38	5409336.42	338.65	0	N	125	60.7	24.7	0.0	0.0	0.0	80.6	1.2	2.3	0.0	0.0	2.5	0.0	0.0	-1.2
219	425584.38	5409336.42	338.65	0	N	250	61.5	24.7	0.0	0.0	0.0	80.6	3.2	-0.2	0.0	0.0	4.8	0.0	0.0	-2.2
219	425584.38	5409336.42	338.65	0	N	500	64.9	24.7	0.0	0.0	0.0	80.6	5.8	-1.6	0.0	0.0	4.8	0.0	0.0	-0.1
219	425584.38	5409336.42	338.65	0	N	1000	64.3	24.7	0.0	0.0	0.0	80.6	11.1	-1.6	0.0	0.0	4.8	0.0	0.0	-5.9
219	425584.38	5409336.42	338.65	0	N	2000	62.1	24.7	0.0	0.0	0.0	80.6	29.3	-1.6	0.0	0.0	4.8	0.0	0.0	-26.3
219	425584.38	5409336.42	338.65	0	N	4000	57.2	24.7	0.0	0.0	0.0	80.6	99.2	-1.6	0.0	0.0	4.8	0.0	0.0	-101.2
219	425584.38	5409336.42	338.65	0	N	8000	48.3	24.7	0.0	0.0	0.0	80.6	353.9	-1.6	0.0	0.0	4.8	0.0	0.0	-364.7
219	425584.38	5409336.42	338.65	0	E	32	35.9	24.7	0.0	0.0	0.0	80.6	0.1	-5.7	0.0	0.0	4.8	0.0	0.0	-19.1
219	425584.38	5409336.42	338.65	0	E	63	53.8	24.7	0.0	0.0	0.0	80.6	0.4	-5.7	0.0	0.0	4.8	0.0	0.0	-1.5
219	425584.38	5409336.42	338.65	0	E	125	60.7	24.7	0.0	0.0	0.0	80.6	1.2	2.3	0.0	0.0	2.5	0.0	0.0	-1.2
219	425584.38	5409336.42	338.65	0	E	250	61.5	24.7	0.0	0.0	0.0	80.6	3.2	-0.2	0.0	0.0	4.8	0.0	0.0	-2.2

Line Source, ISO 9613, Name: "TRE_OP-NPAG", ID: ""																					
Nr.	X	Y	Z	Refl.	DEN	Freq.	Lw	l/a	Optime	K0	Dc	Adiv	Aatm	Agr	Afol	Ahous	Abar	Cmet	RL	Lr
	(m)	(m)	(m)			(Hz)	dB(A)	dB	dB	(dB)	(dB)	(dB)	(dB)	(dB)	(dB)	(dB)	(dB)	(dB)	(dB)	dB(A)
219	425584.38	5409336.42	338.65	0	E	500	64.9	24.7	0.0	0.0	0.0	80.6	5.8	-1.6	0.0	0.0	4.8	0.0	0.0	-0.1
219	425584.38	5409336.42	338.65	0	E	1000	64.3	24.7	0.0	0.0	0.0	80.6	11.1	-1.6	0.0	0.0	4.8	0.0	0.0	-5.9
219	425584.38	5409336.42	338.65	0	E	2000	62.1	24.7	0.0	0.0	0.0	80.6	29.3	-1.6	0.0	0.0	4.8	0.0	0.0	-26.3
219	425584.38	5409336.42	338.65	0	E	4000	57.2	24.7	0.0	0.0	0.0	80.6	99.2	-1.6	0.0	0.0	4.8	0.0	0.0	-101.2
219	425584.38	5409336.42	338.65	0	E	8000	48.3	24.7	0.0	0.0	0.0	80.6	353.9	-1.6	0.0	0.0	4.8	0.0	0.0	-364.7
245	425299.82	5409344.20	349.02	0	D	32	35.9	24.4	0.0	0.0	0.0	81.1	0.1	-5.8	0.0	0.0	4.8	0.0	0.0	-20.0
245	425299.82	5409344.20	349.02	0	D	63	53.8	24.4	0.0	0.0	0.0	81.1	0.4	-5.8	0.0	0.0	4.8	0.0	0.0	-2.4
245	425299.82	5409344.20	349.02	0	D	125	60.7	24.4	0.0	0.0	0.0	81.1	1.3	4.7	0.0	0.0	0.1	0.0	0.0	-2.1
245	425299.82	5409344.20	349.02	0	D	250	61.5	24.4	0.0	0.0	0.0	81.1	3.4	1.4	0.0	0.0	3.4	0.0	0.0	-3.4
245	425299.82	5409344.20	349.02	0	D	500	64.9	24.4	0.0	0.0	0.0	81.1	6.2	-0.9	0.0	0.0	4.8	0.0	0.0	-2.0
245	425299.82	5409344.20	349.02	0	D	1000	64.3	24.4	0.0	0.0	0.0	81.1	11.8	-0.9	0.0	0.0	4.8	0.0	0.0	-8.1
245	425299.82	5409344.20	349.02	0	D	2000	62.1	24.4	0.0	0.0	0.0	81.1	31.1	-0.9	0.0	0.0	4.8	0.0	0.0	-29.6
245	425299.82	5409344.20	349.02	0	D	4000	57.2	24.4	0.0	0.0	0.0	81.1	105.4	-0.9	0.0	0.0	4.8	0.0	0.0	-108.9
245	425299.82	5409344.20	349.02	0	D	8000	48.3	24.4	0.0	0.0	0.0	81.1	376.0	-0.9	0.0	0.0	4.8	0.0	0.0	-388.3
245	425299.82	5409344.20	349.02	0	N	32	35.9	24.4	0.0	0.0	0.0	81.1	0.1	-5.8	0.0	0.0	4.8	0.0	0.0	-20.0
245	425299.82	5409344.20	349.02	0	N	63	53.8	24.4	0.0	0.0	0.0	81.1	0.4	-5.8	0.0	0.0	4.8	0.0	0.0	-2.4
245	425299.82	5409344.20	349.02	0	N	125	60.7	24.4	0.0	0.0	0.0	81.1	1.3	4.7	0.0	0.0	0.1	0.0	0.0	-2.1
245	425299.82	5409344.20	349.02	0	N	250	61.5	24.4	0.0	0.0	0.0	81.1	3.4	1.4	0.0	0.0	3.4	0.0	0.0	-3.4
245	425299.82	5409344.20	349.02	0	N	500	64.9	24.4	0.0	0.0	0.0	81.1	6.2	-0.9	0.0	0.0	4.8	0.0	0.0	-2.0
245	425299.82	5409344.20	349.02	0	N	1000	64.3	24.4	0.0	0.0	0.0	81.1	11.8	-0.9	0.0	0.0	4.8	0.0	0.0	-8.1
245	425299.82	5409344.20	349.02	0	N	2000	62.1	24.4	0.0	0.0	0.0	81.1	31.1	-0.9	0.0	0.0	4.8	0.0	0.0	-29.6
245	425299.82	5409344.20	349.02	0	N	4000	57.2	24.4	0.0	0.0	0.0	81.1	105.4	-0.9	0.0	0.0	4.8	0.0	0.0	-108.9
245	425299.82	5409344.20	349.02	0	N	8000	48.3	24.4	0.0	0.0	0.0	81.1	376.0	-0.9	0.0	0.0	4.8	0.0	0.0	-388.3
245	425299.82	5409344.20	349.02	0	E	32	35.9	24.4	0.0	0.0	0.0	81.1	0.1	-5.8	0.0	0.0	4.8	0.0	0.0	-20.0
245	425299.82	5409344.20	349.02	0	E	63	53.8	24.4	0.0	0.0	0.0	81.1	0.4	-5.8	0.0	0.0	4.8	0.0	0.0	-2.4
245	425299.82	5409344.20	349.02	0	E	125	60.7	24.4	0.0	0.0	0.0	81.1	1.3	4.7	0.0	0.0	0.1	0.0	0.0	-2.1
245	425299.82	5409344.20	349.02	0	E	250	61.5	24.4	0.0	0.0	0.0	81.1	3.4	1.4	0.0	0.0	3.4	0.0	0.0	-3.4
245	425299.82	5409344.20	349.02	0	E	500	64.9	24.4	0.0	0.0	0.0	81.1	6.2	-0.9	0.0	0.0	4.8	0.0	0.0	-2.0
245	425299.82	5409344.20	349.02	0	E	1000	64.3	24.4	0.0	0.0	0.0	81.1	11.8	-0.9	0.0	0.0	4.8	0.0	0.0	-8.1
245	425299.82	5409344.20	349.02	0	E	2000	62.1	24.4	0.0	0.0	0.0	81.1	31.1	-0.9	0.0	0.0	4.8	0.0	0.0	-29.6
245	425299.82	5409344.20	349.02	0	E	4000	57.2	24.4	0.0	0.0	0.0	81.1	105.4	-0.9	0.0	0.0	4.8	0.0	0.0	-108.9
245	425299.82	5409344.20	349.02	0	E	8000	48.3	24.4	0.0	0.0	0.0	81.1	376.0	-0.9	0.0	0.0	4.8	0.0	0.0	-388.3
265	425705.28	5409421.88	317.89	0	D	32	35.9	23.6	0.0	0.0	0.0	80.6	0.1	-5.7	0.0	0.0	4.8	0.0	0.0	-20.3
265	425705.28	5409421.88	317.89	0	D	63	53.8	23.6	0.0	0.0	0.0	80.6	0.4	-5.7	0.0	0.0	4.8	0.0	0.0	-2.7
265	425705.28	5409421.88	317.89	0	D	125	60.7	23.6	0.0	0.0	0.0	80.6	1.2	2.2	0.0	0.0	2.6	0.0	0.0	-2.4
265	425705.28	5409421.88	317.89	0	D	250	61.5	23.6	0.0	0.0	0.0	80.6	3.2	-0.3	0.0	0.0	4.9	0.0	0.0	-3.3
265	425705.28	5409421.88	317.89	0	D	500	64.9	23.6	0.0	0.0	0.0	80.6	5.8	-1.6	0.0	0.0	4.9	0.0	0.0	-1.3
265	425705.28	5409421.88	317.89	0	D	1000	64.3	23.6	0.0	0.0	0.0	80.6	11.1	-1.6	0.0	0.0	5.1	0.0	0.0	-7.3
265	425705.28	5409421.88	317.89	0	D	2000	62.1	23.6	0.0	0.0	0.0	80.6	29.2	-1.6	0.0	0.0	5.4	0.0	0.0	-27.9
265	425705.28	5409421.88	317.89	0	D	4000	57.2	23.6	0.0	0.0	0.0	80.6	99.1	-1.6	0.0	0.0	5.9	0.0	0.0	-103.2
265	425705.28	5409421.88	317.89	0	D	8000	48.3	23.6	0.0	0.0	0.0	80.6	353.5	-1.6	0.0	0.0	6.8	0.0	0.0	-367.4
265	425705.28	5409421.88	317.89	0	N	32	35.9	23.6	0.0	0.0	0.0	80.6	0.1	-5.7	0.0	0.0	4.8	0.0	0.0	-20.3
265	425705.28	5409421.88	317.89	0	N	63	53.8	23.6	0.0	0.0	0.0	80.6	0.4	-5.7	0.0	0.0	4.8	0.0	0.0	-2.7
265	425705.28	5409421.88	317.89	0	N	125	60.7	23.6	0.0	0.0	0.0	80.6	1.2	2.2	0.0	0.0	2.6	0.0	0.0	-2.4
265	425705.28	5409421.88	317.89	0	N	250	61.5	23.6	0.0	0.0	0.0	80.6	3.2	-0.3	0.0	0.0	4.9	0.0	0.0	-3.3
265	425705.28	5409421.88	317.89	0	N	500	64.9	23.6	0.0	0.0	0.0	80.6	5.8	-1.6	0.0	0.0	4.9	0.0	0.0	-1.3
265	425705.28	5409421.88	317.89	0	N	1000	64.3	23.6	0.0	0.0	0.0	80.6	11.1	-1.6	0.0	0.0	5.1	0.0	0.0	-7.3
265	425705.28	5409421.88	317.89	0	N	2000	62.1	23.6	0.0	0.0	0.0	80.6	29.2	-1.6	0.0	0.0	5.4	0.0	0.0	-27.9
265	425705.28	5409421.88	317.89	0	N	4000	57.2	23.6	0.0	0.0	0.0	80.6	99.1	-1.6	0.0	0.0	5.9	0.0	0.0	-103.2
265	425705.28	5409421.88	317.89	0	N	8000	48.3	23.6	0.0	0.0	0.0	80.6	353.5	-1.6	0.0	0.0	6.8	0.0	0.0	-367.4
265	425705.28	5409421.88	317.89	0	E	32	35.9	23.6	0.0	0.0	0.0	80.6	0.1	-5.7	0.0	0.0	4.8	0.0	0.0	-20.3
265	425705.28	5409421.88	317.89	0	E	63	53.8	23.6	0.0	0.0	0.0	80.6	0.4	-5.7	0.0	0.0	4.8	0.0	0.0	-2.7
265	425705.28	5409421.88	317.89	0	E	125	60.7	23.6	0.0	0.0	0.0	80.6	1.2	2.2	0.0	0.0	2.6	0.0	0.0	-2.4
265	425705.28	5409421.88	317.89	0	E	250	61.5	23.6	0.0	0.0	0.0	80.6	3.2	-0.3	0.0	0.0	4.9	0.0	0.0	-3.3
265	425705.28	5409421.88	317.89	0	E	500	64.9	23.6	0.0	0.0	0.0	80.6	5.8	-1.6	0.0	0.0	4.9	0.0	0.0	-1.3
265	425705.28	5409421.88	317.89	0	E	1000	64.3	23.6	0.0	0.0	0.0	80.6	11.1	-1.6	0.0	0.0	5.1	0.0	0.0	-7.3
265	425705.28	5409421.88	317.89	0	E	2000	62.1	23.6	0.0	0.0	0.0	80.6	29.2	-1.6	0.0	0.0	5.4	0.0	0.0	-27.9
265	425705.28	5409421.88	317.89	0	E	4000	57.2	23.6	0.0	0.0	0.0	80.6	99.1	-1.6	0.0	0.0	5.9	0.0	0.0	-103.2
265	425705.28	5409421.88	317.89	0	E	8000	48.3	23.6	0.0	0.0	0.0	80.6	353.5	-1.6	0.0	0.0	6.8	0.0	0.0	-367.4
316	424417.87	5410109.72	360.56	0	D	32	35.9	25.8	0.0	0.0	0.0	83.8	0.1	-5.8	0.0	0.0	0.0	0.0	0.0	-16.5
316	424417.87	5410109.72	360.56	0	D	63	53.8	25.8	0.0	0.0	0.0	83.8	0.5	-5.8	0.0	0.0	0.0	0.0	0.0	1.0
316	424417.87	5410109.72	360.56	0	D	125	60.7	25.8	0.0	0.0	0.0	83.8	1.8	1.7	0.0	0.0	0.0	0.0	0.0	-0.9
316	424417.87	5410109.72	360.56	0	D	250	61.5	25.8	0.0	0.0	0.0	83.8	4.6	-0.7	0.0	0.0	0.0	0.0	0.0	-0.4

Line Source, ISO 9613, Name: "TRE_OP-NPAG", ID: ""																					
Nr.	X	Y	Z	Refl.	DEN	Freq.	Lw	l/a	Optime	K0	Dc	Adiv	Aatm	Agr	Afol	Ahous	Abar	Cmet	RL	Lr
	(m)	(m)	(m)			(Hz)	dB(A)	dB	dB	(dB)	(dB)	(dB)	(dB)	(dB)	(dB)	(dB)	(dB)	(dB)	(dB)	dB(A)
316	424417.87	5410109.72	360.56	0	D	500	64.9	25.8	0.0	0.0	0.0	83.8	8.4	-2.1	0.0	0.0	0.0	0.0	0.0	0.5
316	424417.87	5410109.72	360.56	0	D	1000	64.3	25.8	0.0	0.0	0.0	83.8	16.0	-2.1	0.0	0.0	0.0	0.0	0.0	-7.6
316	424417.87	5410109.72	360.56	0	D	2000	62.1	25.8	0.0	0.0	0.0	83.8	42.3	-2.1	0.0	0.0	0.0	0.0	0.0	-36.1
316	424417.87	5410109.72	360.56	0	D	4000	57.2	25.8	0.0	0.0	0.0	83.8	143.5	-2.1	0.0	0.0	0.0	0.0	0.0	-142.2
316	424417.87	5410109.72	360.56	0	D	8000	48.3	25.8	0.0	0.0	0.0	83.8	511.7	-2.1	0.0	0.0	0.0	0.0	0.0	-519.3
316	424417.87	5410109.72	360.56	0	N	32	35.9	25.8	0.0	0.0	0.0	83.8	0.1	-5.8	0.0	0.0	0.0	0.0	0.0	-16.5
316	424417.87	5410109.72	360.56	0	N	63	53.8	25.8	0.0	0.0	0.0	83.8	0.5	-5.8	0.0	0.0	0.0	0.0	0.0	1.0
316	424417.87	5410109.72	360.56	0	N	125	60.7	25.8	0.0	0.0	0.0	83.8	1.8	1.7	0.0	0.0	0.0	0.0	0.0	-0.9
316	424417.87	5410109.72	360.56	0	N	250	61.5	25.8	0.0	0.0	0.0	83.8	4.6	-0.7	0.0	0.0	0.0	0.0	0.0	-0.4
316	424417.87	5410109.72	360.56	0	N	500	64.9	25.8	0.0	0.0	0.0	83.8	8.4	-2.1	0.0	0.0	0.0	0.0	0.0	0.5
316	424417.87	5410109.72	360.56	0	N	1000	64.3	25.8	0.0	0.0	0.0	83.8	16.0	-2.1	0.0	0.0	0.0	0.0	0.0	-7.6
316	424417.87	5410109.72	360.56	0	N	2000	62.1	25.8	0.0	0.0	0.0	83.8	42.3	-2.1	0.0	0.0	0.0	0.0	0.0	-36.1
316	424417.87	5410109.72	360.56	0	N	4000	57.2	25.8	0.0	0.0	0.0	83.8	143.5	-2.1	0.0	0.0	0.0	0.0	0.0	-142.2
316	424417.87	5410109.72	360.56	0	N	8000	48.3	25.8	0.0	0.0	0.0	83.8	511.7	-2.1	0.0	0.0	0.0	0.0	0.0	-519.3
316	424417.87	5410109.72	360.56	0	E	32	35.9	25.8	0.0	0.0	0.0	83.8	0.1	-5.8	0.0	0.0	0.0	0.0	0.0	-16.5
316	424417.87	5410109.72	360.56	0	E	63	53.8	25.8	0.0	0.0	0.0	83.8	0.5	-5.8	0.0	0.0	0.0	0.0	0.0	1.0
316	424417.87	5410109.72	360.56	0	E	125	60.7	25.8	0.0	0.0	0.0	83.8	1.8	1.7	0.0	0.0	0.0	0.0	0.0	-0.9
316	424417.87	5410109.72	360.56	0	E	250	61.5	25.8	0.0	0.0	0.0	83.8	4.6	-0.7	0.0	0.0	0.0	0.0	0.0	-0.4
316	424417.87	5410109.72	360.56	0	E	500	64.9	25.8	0.0	0.0	0.0	83.8	8.4	-2.1	0.0	0.0	0.0	0.0	0.0	0.5
316	424417.87	5410109.72	360.56	0	E	1000	64.3	25.8	0.0	0.0	0.0	83.8	16.0	-2.1	0.0	0.0	0.0	0.0	0.0	-7.6
316	424417.87	5410109.72	360.56	0	E	2000	62.1	25.8	0.0	0.0	0.0	83.8	42.3	-2.1	0.0	0.0	0.0	0.0	0.0	-36.1
316	424417.87	5410109.72	360.56	0	E	4000	57.2	25.8	0.0	0.0	0.0	83.8	143.5	-2.1	0.0	0.0	0.0	0.0	0.0	-142.2
316	424417.87	5410109.72	360.56	0	E	8000	48.3	25.8	0.0	0.0	0.0	83.8	511.7	-2.1	0.0	0.0	0.0	0.0	0.0	-519.3
328	425500.03	5409457.77	299.84	0	D	32	35.9	22.8	0.0	0.0	0.0	81.0	0.1	-5.8	0.0	0.0	5.2	0.0	0.0	-21.9
328	425500.03	5409457.77	299.84	0	D	63	53.8	22.8	0.0	0.0	0.0	81.0	0.4	-5.8	0.0	0.0	5.5	0.0	0.0	-4.6
328	425500.03	5409457.77	299.84	0	D	125	60.7	22.8	0.0	0.0	0.0	81.0	1.3	2.2	0.0	0.0	4.0	0.0	0.0	-5.1
328	425500.03	5409457.77	299.84	0	D	250	61.5	22.8	0.0	0.0	0.0	81.0	3.3	-0.3	0.0	0.0	7.2	0.0	0.0	-7.0
328	425500.03	5409457.77	299.84	0	D	500	64.9	22.8	0.0	0.0	0.0	81.0	6.1	-1.7	0.0	0.0	8.8	0.0	0.0	-6.6
328	425500.03	5409457.77	299.84	0	D	1000	64.3	22.8	0.0	0.0	0.0	81.0	11.6	-1.7	0.0	0.0	10.9	0.0	0.0	-14.8
328	425500.03	5409457.77	299.84	0	D	2000	62.1	22.8	0.0	0.0	0.0	81.0	30.7	-1.7	0.0	0.0	13.3	0.0	0.0	-38.5
328	425500.03	5409457.77	299.84	0	D	4000	57.2	22.8	0.0	0.0	0.0	81.0	104.1	-1.7	0.0	0.0	16.0	0.0	0.0	-119.4
328	425500.03	5409457.77	299.84	0	D	8000	48.3	22.8	0.0	0.0	0.0	81.0	371.2	-1.7	0.0	0.0	18.9	0.0	0.0	-398.3
328	425500.03	5409457.77	299.84	0	N	32	35.9	22.8	0.0	0.0	0.0	81.0	0.1	-5.8	0.0	0.0	5.2	0.0	0.0	-21.9
328	425500.03	5409457.77	299.84	0	N	63	53.8	22.8	0.0	0.0	0.0	81.0	0.4	-5.8	0.0	0.0	5.5	0.0	0.0	-4.6
328	425500.03	5409457.77	299.84	0	N	125	60.7	22.8	0.0	0.0	0.0	81.0	1.3	2.2	0.0	0.0	4.0	0.0	0.0	-5.1
328	425500.03	5409457.77	299.84	0	N	250	61.5	22.8	0.0	0.0	0.0	81.0	3.3	-0.3	0.0	0.0	7.2	0.0	0.0	-7.0
328	425500.03	5409457.77	299.84	0	N	500	64.9	22.8	0.0	0.0	0.0	81.0	6.1	-1.7	0.0	0.0	8.8	0.0	0.0	-6.6
328	425500.03	5409457.77	299.84	0	N	1000	64.3	22.8	0.0	0.0	0.0	81.0	11.6	-1.7	0.0	0.0	10.9	0.0	0.0	-14.8
328	425500.03	5409457.77	299.84	0	N	2000	62.1	22.8	0.0	0.0	0.0	81.0	30.7	-1.7	0.0	0.0	13.3	0.0	0.0	-38.5
328	425500.03	5409457.77	299.84	0	N	4000	57.2	22.8	0.0	0.0	0.0	81.0	104.1	-1.7	0.0	0.0	16.0	0.0	0.0	-119.4
328	425500.03	5409457.77	299.84	0	N	8000	48.3	22.8	0.0	0.0	0.0	81.0	371.2	-1.7	0.0	0.0	18.9	0.0	0.0	-398.3
328	425500.03	5409457.77	299.84	0	E	32	35.9	22.8	0.0	0.0	0.0	81.0	0.1	-5.8	0.0	0.0	5.2	0.0	0.0	-21.9
328	425500.03	5409457.77	299.84	0	E	63	53.8	22.8	0.0	0.0	0.0	81.0	0.4	-5.8	0.0	0.0	5.5	0.0	0.0	-4.6
328	425500.03	5409457.77	299.84	0	E	125	60.7	22.8	0.0	0.0	0.0	81.0	1.3	2.2	0.0	0.0	4.0	0.0	0.0	-5.1
328	425500.03	5409457.77	299.84	0	E	250	61.5	22.8	0.0	0.0	0.0	81.0	3.3	-0.3	0.0	0.0	7.2	0.0	0.0	-7.0
328	425500.03	5409457.77	299.84	0	E	500	64.9	22.8	0.0	0.0	0.0	81.0	6.1	-1.7	0.0	0.0	8.8	0.0	0.0	-6.6
328	425500.03	5409457.77	299.84	0	E	1000	64.3	22.8	0.0	0.0	0.0	81.0	11.6	-1.7	0.0	0.0	10.9	0.0	0.0	-14.8
328	425500.03	5409457.77	299.84	0	E	2000	62.1	22.8	0.0	0.0	0.0	81.0	30.7	-1.7	0.0	0.0	13.3	0.0	0.0	-38.5
328	425500.03	5409457.77	299.84	0	E	4000	57.2	22.8	0.0	0.0	0.0	81.0	104.1	-1.7	0.0	0.0	16.0	0.0	0.0	-119.4
328	425500.03	5409457.77	299.84	0	E	8000	48.3	22.8	0.0	0.0	0.0	81.0	371.2	-1.7	0.0	0.0	18.9	0.0	0.0	-398.3
329	424642.89	5409858.56	354.60	0	D	32	35.9	24.8	0.0	0.0	0.0	83.1	0.1	-5.8	0.0	0.0	4.8	0.0	0.0	-21.6
329	424642.89	5409858.56	354.60	0	D	63	53.8	24.8	0.0	0.0	0.0	83.1	0.5	-5.8	0.0	0.0	4.8	0.0	0.0	-4.0
329	424642.89	5409858.56	354.60	0	D	125	60.7	24.8	0.0	0.0	0.0	83.1	1.7	2.0	0.0	0.0	2.7	0.0	0.0	-4.1
329	424642.89	5409858.56	354.60	0	D	250	61.5	24.8	0.0	0.0	0.0	83.1	4.2	-0.5	0.0	0.0	4.8	0.0	0.0	-5.4
329	424642.89	5409858.56	354.60	0	D	500	64.9	24.8	0.0	0.0	0.0	83.1	7.8	-1.9	0.0	0.0	4.8	0.0	0.0	-4.1
329	424642.89	5409858.56	354.60	0	D	1000	64.3	24.8	0.0	0.0	0.0	83.1	14.8	-1.9	0.0	0.0	4.8	0.0	0.0	-11.7
329	424642.89	5409858.56	354.60	0	D	2000	62.1	24.8	0.0	0.0	0.0	83.1	39.0	-1.9	0.0	0.0	4.8	0.0	0.0	-38.2
329	424642.89	5409858.56	354.60	0	D	4000	57.2	24.8	0.0	0.0	0.0	83.1	132.4	-1.9	0.0	0.0	4.8	0.0	0.0	-136.5
329	424642.89	5409858.56	354.60	0	D	8000	48.3	24.8	0.0	0.0	0.0	83.1	472.3	-1.9	0.0	0.0	4.8	0.0	0.0	-485.2
329	424642.89	5409858.56	354.60	0	N	32	35.9	24.8	0.0	0.0	0.0	83.1	0.1	-5.8	0.0	0.0	4.8	0.0	0.0	-21.6
329	424642.89	5409858.56	354.60	0	N	63	53.8	24.8	0.0	0.0	0.0	83.1	0.5	-5.8	0.0	0.0	4.8	0.0	0.0	-4.0
329	424642.89	5409858.56	354.60	0	N	125	60.7	24.8	0.0	0.0	0.0	83.1	1.7	2.0	0.0	0.0	2.7	0.0	0.0	-4.1
329	424642.89	5409858.56	354.60	0	N	250	61.5	24.8	0.0	0.0	0.0	83.1	4.2	-0.5	0.0	0.0	4.8	0.0	0.0	-5.4

Line Source, ISO 9613, Name: "TRE_OP-NPAG", ID: ""																					
Nr.	X	Y	Z	Refl.	DEN	Freq.	Lw	l/a	Optime	K0	Dc	Adiv	Aatm	Agr	Afol	Ahous	Abar	Cmet	RL	Lr
	(m)	(m)	(m)			(Hz)	dB(A)	dB	dB	(dB)	(dB)	(dB)	(dB)	(dB)	(dB)	(dB)	(dB)	(dB)	(dB)	dB(A)
329	424642.89	5409858.56	354.60	0	N	500	64.9	24.8	0.0	0.0	0.0	83.1	7.8	-1.9	0.0	0.0	4.8	0.0	0.0	-4.1
329	424642.89	5409858.56	354.60	0	N	1000	64.3	24.8	0.0	0.0	0.0	83.1	14.8	-1.9	0.0	0.0	4.8	0.0	0.0	-11.7
329	424642.89	5409858.56	354.60	0	N	2000	62.1	24.8	0.0	0.0	0.0	83.1	39.0	-1.9	0.0	0.0	4.8	0.0	0.0	-38.2
329	424642.89	5409858.56	354.60	0	N	4000	57.2	24.8	0.0	0.0	0.0	83.1	132.4	-1.9	0.0	0.0	4.8	0.0	0.0	-136.5
329	424642.89	5409858.56	354.60	0	N	8000	48.3	24.8	0.0	0.0	0.0	83.1	472.3	-1.9	0.0	0.0	4.8	0.0	0.0	-485.2
329	424642.89	5409858.56	354.60	0	E	32	35.9	24.8	0.0	0.0	0.0	83.1	0.1	-5.8	0.0	0.0	4.8	0.0	0.0	-21.6
329	424642.89	5409858.56	354.60	0	E	63	53.8	24.8	0.0	0.0	0.0	83.1	0.5	-5.8	0.0	0.0	4.8	0.0	0.0	-4.0
329	424642.89	5409858.56	354.60	0	E	125	60.7	24.8	0.0	0.0	0.0	83.1	1.7	2.0	0.0	0.0	2.7	0.0	0.0	-4.1
329	424642.89	5409858.56	354.60	0	E	250	61.5	24.8	0.0	0.0	0.0	83.1	4.2	-0.5	0.0	0.0	4.8	0.0	0.0	-5.4
329	424642.89	5409858.56	354.60	0	E	500	64.9	24.8	0.0	0.0	0.0	83.1	7.8	-1.9	0.0	0.0	4.8	0.0	0.0	-4.1
329	424642.89	5409858.56	354.60	0	E	1000	64.3	24.8	0.0	0.0	0.0	83.1	14.8	-1.9	0.0	0.0	4.8	0.0	0.0	-11.7
329	424642.89	5409858.56	354.60	0	E	2000	62.1	24.8	0.0	0.0	0.0	83.1	39.0	-1.9	0.0	0.0	4.8	0.0	0.0	-38.2
329	424642.89	5409858.56	354.60	0	E	4000	57.2	24.8	0.0	0.0	0.0	83.1	132.4	-1.9	0.0	0.0	4.8	0.0	0.0	-136.5
329	424642.89	5409858.56	354.60	0	E	8000	48.3	24.8	0.0	0.0	0.0	83.1	472.3	-1.9	0.0	0.0	4.8	0.0	0.0	-485.2
335	424815.74	5409646.59	350.53	0	D	32	35.9	24.0	0.0	0.0	0.0	82.5	0.1	-5.8	0.0	0.0	4.8	0.0	0.0	-21.8
335	424815.74	5409646.59	350.53	0	D	63	53.8	24.0	0.0	0.0	0.0	82.5	0.5	-5.8	0.0	0.0	4.8	0.0	0.0	-4.2
335	424815.74	5409646.59	350.53	0	D	125	60.7	24.0	0.0	0.0	0.0	82.5	1.5	2.1	0.0	0.0	2.7	0.0	0.0	-4.2
335	424815.74	5409646.59	350.53	0	D	250	61.5	24.0	0.0	0.0	0.0	82.5	3.9	-0.3	0.0	0.0	4.8	0.0	0.0	-5.5
335	424815.74	5409646.59	350.53	0	D	500	64.9	24.0	0.0	0.0	0.0	82.5	7.3	-1.7	0.0	0.0	4.8	0.0	0.0	-4.0
335	424815.74	5409646.59	350.53	0	D	1000	64.3	24.0	0.0	0.0	0.0	82.5	13.8	-1.7	0.0	0.0	4.8	0.0	0.0	-11.1
335	424815.74	5409646.59	350.53	0	D	2000	62.1	24.0	0.0	0.0	0.0	82.5	36.4	-1.7	0.0	0.0	4.8	0.0	0.0	-35.9
335	424815.74	5409646.59	350.53	0	D	4000	57.2	24.0	0.0	0.0	0.0	82.5	123.5	-1.7	0.0	0.0	4.8	0.0	0.0	-127.9
335	424815.74	5409646.59	350.53	0	D	8000	48.3	24.0	0.0	0.0	0.0	82.5	440.4	-1.7	0.0	0.0	4.8	0.0	0.0	-453.8
335	424815.74	5409646.59	350.53	0	N	32	35.9	24.0	0.0	0.0	0.0	82.5	0.1	-5.8	0.0	0.0	4.8	0.0	0.0	-21.8
335	424815.74	5409646.59	350.53	0	N	63	53.8	24.0	0.0	0.0	0.0	82.5	0.5	-5.8	0.0	0.0	4.8	0.0	0.0	-4.2
335	424815.74	5409646.59	350.53	0	N	125	60.7	24.0	0.0	0.0	0.0	82.5	1.5	2.1	0.0	0.0	2.7	0.0	0.0	-4.2
335	424815.74	5409646.59	350.53	0	N	250	61.5	24.0	0.0	0.0	0.0	82.5	3.9	-0.3	0.0	0.0	4.8	0.0	0.0	-5.5
335	424815.74	5409646.59	350.53	0	N	500	64.9	24.0	0.0	0.0	0.0	82.5	7.3	-1.7	0.0	0.0	4.8	0.0	0.0	-4.0
335	424815.74	5409646.59	350.53	0	N	1000	64.3	24.0	0.0	0.0	0.0	82.5	13.8	-1.7	0.0	0.0	4.8	0.0	0.0	-11.1
335	424815.74	5409646.59	350.53	0	N	2000	62.1	24.0	0.0	0.0	0.0	82.5	36.4	-1.7	0.0	0.0	4.8	0.0	0.0	-35.9
335	424815.74	5409646.59	350.53	0	N	4000	57.2	24.0	0.0	0.0	0.0	82.5	123.5	-1.7	0.0	0.0	4.8	0.0	0.0	-127.9
335	424815.74	5409646.59	350.53	0	N	8000	48.3	24.0	0.0	0.0	0.0	82.5	440.4	-1.7	0.0	0.0	4.8	0.0	0.0	-453.8
335	424815.74	5409646.59	350.53	0	E	32	35.9	24.0	0.0	0.0	0.0	82.5	0.1	-5.8	0.0	0.0	4.8	0.0	0.0	-21.8
335	424815.74	5409646.59	350.53	0	E	63	53.8	24.0	0.0	0.0	0.0	82.5	0.5	-5.8	0.0	0.0	4.8	0.0	0.0	-4.2
335	424815.74	5409646.59	350.53	0	E	125	60.7	24.0	0.0	0.0	0.0	82.5	1.5	2.1	0.0	0.0	2.7	0.0	0.0	-4.2
335	424815.74	5409646.59	350.53	0	E	250	61.5	24.0	0.0	0.0	0.0	82.5	3.9	-0.3	0.0	0.0	4.8	0.0	0.0	-5.5
335	424815.74	5409646.59	350.53	0	E	500	64.9	24.0	0.0	0.0	0.0	82.5	7.3	-1.7	0.0	0.0	4.8	0.0	0.0	-4.0
335	424815.74	5409646.59	350.53	0	E	1000	64.3	24.0	0.0	0.0	0.0	82.5	13.8	-1.7	0.0	0.0	4.8	0.0	0.0	-11.1
335	424815.74	5409646.59	350.53	0	E	2000	62.1	24.0	0.0	0.0	0.0	82.5	36.4	-1.7	0.0	0.0	4.8	0.0	0.0	-35.9
335	424815.74	5409646.59	350.53	0	E	4000	57.2	24.0	0.0	0.0	0.0	82.5	123.5	-1.7	0.0	0.0	4.8	0.0	0.0	-127.9
335	424815.74	5409646.59	350.53	0	E	8000	48.3	24.0	0.0	0.0	0.0	82.5	440.4	-1.7	0.0	0.0	4.8	0.0	0.0	-453.8
350	424036.85	5410283.13	364.00	0	D	32	35.9	25.5	0.0	0.0	0.0	84.6	0.2	-5.8	0.0	0.0	0.0	0.0	0.0	-17.5
350	424036.85	5410283.13	364.00	0	D	63	53.8	25.5	0.0	0.0	0.0	84.6	0.6	-5.8	0.0	0.0	0.0	0.0	0.0	-0.0
350	424036.85	5410283.13	364.00	0	D	125	60.7	25.5	0.0	0.0	0.0	84.6	2.0	2.1	0.0	0.0	0.0	0.0	0.0	-2.4
350	424036.85	5410283.13	364.00	0	D	250	61.5	25.5	0.0	0.0	0.0	84.6	5.0	-0.4	0.0	0.0	0.0	0.0	0.0	-2.2
350	424036.85	5410283.13	364.00	0	D	500	64.9	25.5	0.0	0.0	0.0	84.6	9.2	-1.8	0.0	0.0	0.0	0.0	0.0	-1.6
350	424036.85	5410283.13	364.00	0	D	1000	64.3	25.5	0.0	0.0	0.0	84.6	17.4	-1.8	0.0	0.0	0.0	0.0	0.0	-10.5
350	424036.85	5410283.13	364.00	0	D	2000	62.1	25.5	0.0	0.0	0.0	84.6	46.1	-1.8	0.0	0.0	0.0	0.0	0.0	-41.3
350	424036.85	5410283.13	364.00	0	D	4000	57.2	25.5	0.0	0.0	0.0	84.6	156.3	-1.8	0.0	0.0	0.0	0.0	0.0	-156.4
350	424036.85	5410283.13	364.00	0	D	8000	48.3	25.5	0.0	0.0	0.0	84.6	557.4	-1.8	0.0	0.0	0.0	0.0	0.0	-566.5
350	424036.85	5410283.13	364.00	0	N	32	35.9	25.5	0.0	0.0	0.0	84.6	0.2	-5.8	0.0	0.0	0.0	0.0	0.0	-17.5
350	424036.85	5410283.13	364.00	0	N	63	53.8	25.5	0.0	0.0	0.0	84.6	0.6	-5.8	0.0	0.0	0.0	0.0	0.0	-0.0
350	424036.85	5410283.13	364.00	0	N	125	60.7	25.5	0.0	0.0	0.0	84.6	2.0	2.1	0.0	0.0	0.0	0.0	0.0	-2.4
350	424036.85	5410283.13	364.00	0	N	250	61.5	25.5	0.0	0.0	0.0	84.6	5.0	-0.4	0.0	0.0	0.0	0.0	0.0	-2.2
350	424036.85	5410283.13	364.00	0	N	500	64.9	25.5	0.0	0.0	0.0	84.6	9.2	-1.8	0.0	0.0	0.0	0.0	0.0	-1.6
350	424036.85	5410283.13	364.00	0	N	1000	64.3	25.5	0.0	0.0	0.0	84.6	17.4	-1.8	0.0	0.0	0.0	0.0	0.0	-10.5
350	424036.85	5410283.13	364.00	0	N	2000	62.1	25.5	0.0	0.0	0.0	84.6	46.1	-1.8	0.0	0.0	0.0	0.0	0.0	-41.3
350	424036.85	5410283.13	364.00	0	N	4000	57.2	25.5	0.0	0.0	0.0	84.6	156.3	-1.8	0.0	0.0	0.0	0.0	0.0	-156.4
350	424036.85	5410283.13	364.00	0	N	8000	48.3	25.5	0.0	0.0	0.0	84.6	557.4	-1.8	0.0	0.0	0.0	0.0	0.0	-566.5
350	424036.85	5410283.13	364.00	0	E	32	35.9	25.5	0.0	0.0	0.0	84.6	0.2	-5.8	0.0	0.0	0.0	0.0	0.0	-17.5
350	424036.85	5410283.13	364.00	0	E	63	53.8	25.5	0.0	0.0	0.0	84.6	0.6	-5.8	0.0	0.0	0.0	0.0	0.0	-0.0
350	424036.85	5410283.13	364.00	0	E	125	60.7	25.5	0.0	0.0	0.0	84.6	2.0	2.1	0.0	0.0	0.0	0.0	0.0	-2.4
350	424036.85	5410283.13	364.00	0	E	250	61.5	25.5	0.0	0.0	0.0	84.6	5.0	-0.4	0.0	0.0	0.0	0.0	0.0	-2.2

Line Source, ISO 9613, Name: "TRE_OP-NPAG", ID: ""																				
Nr.	X	Y	Z	Refl.	DEN	Freq.	Lw	l/a	Optime	K0	Dc	Adiv	Aatm	Agr	Afol	Ahous	Abar	Cmet	RL	Lr
	(m)	(m)	(m)			(Hz)	dB(A)	dB	dB	(dB)	(dB)	(dB)	(dB)	(dB)	(dB)	(dB)	(dB)	(dB)	(dB)	dB(A)
350	424036.85	5410283.13	364.00	0	E	500	64.9	25.5	0.0	0.0	0.0	84.6	9.2	-1.8	0.0	0.0	0.0	0.0	0.0	-1.6
350	424036.85	5410283.13	364.00	0	E	1000	64.3	25.5	0.0	0.0	0.0	84.6	17.4	-1.8	0.0	0.0	0.0	0.0	0.0	-10.5
350	424036.85	5410283.13	364.00	0	E	2000	62.1	25.5	0.0	0.0	0.0	84.6	46.1	-1.8	0.0	0.0	0.0	0.0	0.0	-41.3
350	424036.85	5410283.13	364.00	0	E	4000	57.2	25.5	0.0	0.0	0.0	84.6	156.3	-1.8	0.0	0.0	0.0	0.0	0.0	-156.4
350	424036.85	5410283.13	364.00	0	E	8000	48.3	25.5	0.0	0.0	0.0	84.6	557.4	-1.8	0.0	0.0	0.0	0.0	0.0	-566.5
363	424973.04	5409499.81	349.00	0	D	32	35.9	22.6	0.0	0.0	0.0	82.0	0.1	-5.8	0.0	0.0	4.8	0.0	0.0	-22.7
363	424973.04	5409499.81	349.00	0	D	63	53.8	22.6	0.0	0.0	0.0	82.0	0.4	-5.8	0.0	0.0	4.8	0.0	0.0	-5.1
363	424973.04	5409499.81	349.00	0	D	125	60.7	22.6	0.0	0.0	0.0	82.0	1.5	2.3	0.0	0.0	2.5	0.0	0.0	-5.0
363	424973.04	5409499.81	349.00	0	D	250	61.5	22.6	0.0	0.0	0.0	82.0	3.7	-0.2	0.0	0.0	4.8	0.0	0.0	-6.3
363	424973.04	5409499.81	349.00	0	D	500	64.9	22.6	0.0	0.0	0.0	82.0	6.9	-1.6	0.0	0.0	4.8	0.0	0.0	-4.6
363	424973.04	5409499.81	349.00	0	D	1000	64.3	22.6	0.0	0.0	0.0	82.0	13.0	-1.6	0.0	0.0	4.8	0.0	0.0	-11.4
363	424973.04	5409499.81	349.00	0	D	2000	62.1	22.6	0.0	0.0	0.0	82.0	34.3	-1.6	0.0	0.0	4.8	0.0	0.0	-34.9
363	424973.04	5409499.81	349.00	0	D	4000	57.2	22.6	0.0	0.0	0.0	82.0	116.4	-1.6	0.0	0.0	4.8	0.0	0.0	-121.9
363	424973.04	5409499.81	349.00	0	D	8000	48.3	22.6	0.0	0.0	0.0	82.0	415.3	-1.6	0.0	0.0	4.8	0.0	0.0	-429.7
363	424973.04	5409499.81	349.00	0	N	32	35.9	22.6	0.0	0.0	0.0	82.0	0.1	-5.8	0.0	0.0	4.8	0.0	0.0	-22.7
363	424973.04	5409499.81	349.00	0	N	63	53.8	22.6	0.0	0.0	0.0	82.0	0.4	-5.8	0.0	0.0	4.8	0.0	0.0	-5.1
363	424973.04	5409499.81	349.00	0	N	125	60.7	22.6	0.0	0.0	0.0	82.0	1.5	2.3	0.0	0.0	2.5	0.0	0.0	-5.0
363	424973.04	5409499.81	349.00	0	N	250	61.5	22.6	0.0	0.0	0.0	82.0	3.7	-0.2	0.0	0.0	4.8	0.0	0.0	-6.3
363	424973.04	5409499.81	349.00	0	N	500	64.9	22.6	0.0	0.0	0.0	82.0	6.9	-1.6	0.0	0.0	4.8	0.0	0.0	-4.6
363	424973.04	5409499.81	349.00	0	N	1000	64.3	22.6	0.0	0.0	0.0	82.0	13.0	-1.6	0.0	0.0	4.8	0.0	0.0	-11.4
363	424973.04	5409499.81	349.00	0	N	2000	62.1	22.6	0.0	0.0	0.0	82.0	34.3	-1.6	0.0	0.0	4.8	0.0	0.0	-34.9
363	424973.04	5409499.81	349.00	0	N	4000	57.2	22.6	0.0	0.0	0.0	82.0	116.4	-1.6	0.0	0.0	4.8	0.0	0.0	-121.9
363	424973.04	5409499.81	349.00	0	N	8000	48.3	22.6	0.0	0.0	0.0	82.0	415.3	-1.6	0.0	0.0	4.8	0.0	0.0	-429.7
363	424973.04	5409499.81	349.00	0	E	32	35.9	22.6	0.0	0.0	0.0	82.0	0.1	-5.8	0.0	0.0	4.8	0.0	0.0	-22.7
363	424973.04	5409499.81	349.00	0	E	63	53.8	22.6	0.0	0.0	0.0	82.0	0.4	-5.8	0.0	0.0	4.8	0.0	0.0	-5.1
363	424973.04	5409499.81	349.00	0	E	125	60.7	22.6	0.0	0.0	0.0	82.0	1.5	2.3	0.0	0.0	2.5	0.0	0.0	-5.0
363	424973.04	5409499.81	349.00	0	E	250	61.5	22.6	0.0	0.0	0.0	82.0	3.7	-0.2	0.0	0.0	4.8	0.0	0.0	-6.3
363	424973.04	5409499.81	349.00	0	E	500	64.9	22.6	0.0	0.0	0.0	82.0	6.9	-1.6	0.0	0.0	4.8	0.0	0.0	-4.6
363	424973.04	5409499.81	349.00	0	E	1000	64.3	22.6	0.0	0.0	0.0	82.0	13.0	-1.6	0.0	0.0	4.8	0.0	0.0	-11.4
363	424973.04	5409499.81	349.00	0	E	2000	62.1	22.6	0.0	0.0	0.0	82.0	34.3	-1.6	0.0	0.0	4.8	0.0	0.0	-34.9
363	424973.04	5409499.81	349.00	0	E	4000	57.2	22.6	0.0	0.0	0.0	82.0	116.4	-1.6	0.0	0.0	4.8	0.0	0.0	-121.9
363	424973.04	5409499.81	349.00	0	E	8000	48.3	22.6	0.0	0.0	0.0	82.0	415.3	-1.6	0.0	0.0	4.8	0.0	0.0	-429.7
390	423606.00	5410411.07	364.00	0	D	32	35.9	25.3	0.0	0.0	0.0	85.3	0.2	-5.9	0.0	0.0	0.0	0.0	0.0	-18.4
390	423606.00	5410411.07	364.00	0	D	63	53.8	25.3	0.0	0.0	0.0	85.3	0.6	-5.9	0.0	0.0	0.0	0.0	0.0	-1.0
390	423606.00	5410411.07	364.00	0	D	125	60.7	25.3	0.0	0.0	0.0	85.3	2.1	1.9	0.0	0.0	0.0	0.0	0.0	-3.4
390	423606.00	5410411.07	364.00	0	D	250	61.5	25.3	0.0	0.0	0.0	85.3	5.4	-0.5	0.0	0.0	0.0	0.0	0.0	-3.4
390	423606.00	5410411.07	364.00	0	D	500	64.9	25.3	0.0	0.0	0.0	85.3	10.0	-1.9	0.0	0.0	0.0	0.0	0.0	-3.2
390	423606.00	5410411.07	364.00	0	D	1000	64.3	25.3	0.0	0.0	0.0	85.3	18.9	-1.9	0.0	0.0	0.0	0.0	0.0	-12.7
390	423606.00	5410411.07	364.00	0	D	2000	62.1	25.3	0.0	0.0	0.0	85.3	50.0	-1.9	0.0	0.0	0.0	0.0	0.0	-46.0
390	423606.00	5410411.07	364.00	0	D	4000	57.2	25.3	0.0	0.0	0.0	85.3	169.5	-1.9	0.0	0.0	0.0	0.0	0.0	-170.4
390	423606.00	5410411.07	364.00	0	D	8000	48.3	25.3	0.0	0.0	0.0	85.3	604.4	-1.9	0.0	0.0	0.0	0.0	0.0	-614.2
390	423606.00	5410411.07	364.00	0	N	32	35.9	25.3	0.0	0.0	0.0	85.3	0.2	-5.9	0.0	0.0	0.0	0.0	0.0	-18.4
390	423606.00	5410411.07	364.00	0	N	63	53.8	25.3	0.0	0.0	0.0	85.3	0.6	-5.9	0.0	0.0	0.0	0.0	0.0	-1.0
390	423606.00	5410411.07	364.00	0	N	125	60.7	25.3	0.0	0.0	0.0	85.3	2.1	1.9	0.0	0.0	0.0	0.0	0.0	-3.4
390	423606.00	5410411.07	364.00	0	N	250	61.5	25.3	0.0	0.0	0.0	85.3	5.4	-0.5	0.0	0.0	0.0	0.0	0.0	-3.4
390	423606.00	5410411.07	364.00	0	N	500	64.9	25.3	0.0	0.0	0.0	85.3	10.0	-1.9	0.0	0.0	0.0	0.0	0.0	-3.2
390	423606.00	5410411.07	364.00	0	N	1000	64.3	25.3	0.0	0.0	0.0	85.3	18.9	-1.9	0.0	0.0	0.0	0.0	0.0	-12.7
390	423606.00	5410411.07	364.00	0	N	2000	62.1	25.3	0.0	0.0	0.0	85.3	50.0	-1.9	0.0	0.0	0.0	0.0	0.0	-46.0
390	423606.00	5410411.07	364.00	0	N	4000	57.2	25.3	0.0	0.0	0.0	85.3	169.5	-1.9	0.0	0.0	0.0	0.0	0.0	-170.4
390	423606.00	5410411.07	364.00	0	N	8000	48.3	25.3	0.0	0.0	0.0	85.3	604.4	-1.9	0.0	0.0	0.0	0.0	0.0	-614.2
390	423606.00	5410411.07	364.00	0	E	32	35.9	25.3	0.0	0.0	0.0	85.3	0.2	-5.9	0.0	0.0	0.0	0.0	0.0	-18.4
390	423606.00	5410411.07	364.00	0	E	63	53.8	25.3	0.0	0.0	0.0	85.3	0.6	-5.9	0.0	0.0	0.0	0.0	0.0	-1.0
390	423606.00	5410411.07	364.00	0	E	125	60.7	25.3	0.0	0.0	0.0	85.3	2.1	1.9	0.0	0.0	0.0	0.0	0.0	-3.4
390	423606.00	5410411.07	364.00	0	E	250	61.5	25.3	0.0	0.0	0.0	85.3	5.4	-0.5	0.0	0.0	0.0	0.0	0.0	-3.4
390	423606.00	5410411.07	364.00	0	E	500	64.9	25.3	0.0	0.0	0.0	85.3	10.0	-1.9	0.0	0.0	0.0	0.0	0.0	-3.2
390	423606.00	5410411.07	364.00	0	E	1000	64.3	25.3	0.0	0.0	0.0	85.3	18.9	-1.9	0.0	0.0	0.0	0.0	0.0	-12.7
390	423606.00	5410411.07	364.00	0	E	2000	62.1	25.3	0.0	0.0	0.0	85.3	50.0	-1.9	0.0	0.0	0.0	0.0	0.0	-46.0
390	423606.00	5410411.07	364.00	0	E	4000	57.2	25.3	0.0	0.0	0.0	85.3	169.5	-1.9	0.0	0.0	0.0	0.0	0.0	-170.4
390	423606.00	5410411.07	364.00	0	E	8000	48.3	25.3	0.0	0.0	0.0	85.3	604.4	-1.9	0.0	0.0	0.0	0.0	0.0	-614.2
394	425102.15	5409403.92	349.02	0	D	32	35.9	21.5	0.0	0.0	0.0	81.6	0.1	-5.8	0.0	0.0	4.8	0.0	0.0	-23.3
394	425102.15	5409403.92	349.02	0	D	63	53.8	21.5	0.0	0.0	0.0	81.6	0.4	-5.8	0.0	0.0	4.8	0.0	0.0	-5.7
394	425102.15	5409403.92	349.02	0	D	125	60.7	21.5	0.0	0.0	0.0	81.6	1.4	2.9	0.0	0.0	1.9	0.0	0.0	-5.6
394	425102.15	5409403.92	349.02	0	D	250	61.5	21.5	0.0	0.0	0.0	81.6	3.5	0.2	0.0	0.0	4.5	0.0	0.0	-6.9

Line Source, ISO 9613, Name: "TRE_OP-NPAG", ID: ""																					
Nr.	X	Y	Z	Refl.	DEN	Freq.	Lw	l/a	Optime	K0	Dc	Adiv	Aatm	Agr	Afol	Ahous	Abar	Cmet	RL	Lr
	(m)	(m)	(m)			(Hz)	dB(A)	dB	dB	(dB)	(dB)	(dB)	(dB)	(dB)	(dB)	(dB)	(dB)	(dB)	(dB)	dB(A)
394	425102.15	5409403.92	349.02	0	D	500	64.9	21.5	0.0	0.0	0.0	81.6	6.5	-1.3	0.0	0.0	4.8	0.0	0.0	-5.2
394	425102.15	5409403.92	349.02	0	D	1000	64.3	21.5	0.0	0.0	0.0	81.6	12.4	-1.3	0.0	0.0	4.8	0.0	0.0	-11.7
394	425102.15	5409403.92	349.02	0	D	2000	62.1	21.5	0.0	0.0	0.0	81.6	32.8	-1.3	0.0	0.0	4.8	0.0	0.0	-34.3
394	425102.15	5409403.92	349.02	0	D	4000	57.2	21.5	0.0	0.0	0.0	81.6	111.2	-1.3	0.0	0.0	4.8	0.0	0.0	-117.6
394	425102.15	5409403.92	349.02	0	D	8000	48.3	21.5	0.0	0.0	0.0	81.6	396.8	-1.3	0.0	0.0	4.8	0.0	0.0	-412.0
394	425102.15	5409403.92	349.02	0	N	32	35.9	21.5	0.0	0.0	0.0	81.6	0.1	-5.8	0.0	0.0	4.8	0.0	0.0	-23.3
394	425102.15	5409403.92	349.02	0	N	63	53.8	21.5	0.0	0.0	0.0	81.6	0.4	-5.8	0.0	0.0	4.8	0.0	0.0	-5.7
394	425102.15	5409403.92	349.02	0	N	125	60.7	21.5	0.0	0.0	0.0	81.6	1.4	2.9	0.0	0.0	1.9	0.0	0.0	-5.6
394	425102.15	5409403.92	349.02	0	N	250	61.5	21.5	0.0	0.0	0.0	81.6	3.5	0.2	0.0	0.0	4.5	0.0	0.0	-6.9
394	425102.15	5409403.92	349.02	0	N	500	64.9	21.5	0.0	0.0	0.0	81.6	6.5	-1.3	0.0	0.0	4.8	0.0	0.0	-5.2
394	425102.15	5409403.92	349.02	0	N	1000	64.3	21.5	0.0	0.0	0.0	81.6	12.4	-1.3	0.0	0.0	4.8	0.0	0.0	-11.7
394	425102.15	5409403.92	349.02	0	N	2000	62.1	21.5	0.0	0.0	0.0	81.6	32.8	-1.3	0.0	0.0	4.8	0.0	0.0	-34.3
394	425102.15	5409403.92	349.02	0	N	4000	57.2	21.5	0.0	0.0	0.0	81.6	111.2	-1.3	0.0	0.0	4.8	0.0	0.0	-117.6
394	425102.15	5409403.92	349.02	0	N	8000	48.3	21.5	0.0	0.0	0.0	81.6	396.8	-1.3	0.0	0.0	4.8	0.0	0.0	-412.0
394	425102.15	5409403.92	349.02	0	E	32	35.9	21.5	0.0	0.0	0.0	81.6	0.1	-5.8	0.0	0.0	4.8	0.0	0.0	-23.3
394	425102.15	5409403.92	349.02	0	E	63	53.8	21.5	0.0	0.0	0.0	81.6	0.4	-5.8	0.0	0.0	4.8	0.0	0.0	-5.7
394	425102.15	5409403.92	349.02	0	E	125	60.7	21.5	0.0	0.0	0.0	81.6	1.4	2.9	0.0	0.0	1.9	0.0	0.0	-5.6
394	425102.15	5409403.92	349.02	0	E	250	61.5	21.5	0.0	0.0	0.0	81.6	3.5	0.2	0.0	0.0	4.5	0.0	0.0	-6.9
394	425102.15	5409403.92	349.02	0	E	500	64.9	21.5	0.0	0.0	0.0	81.6	6.5	-1.3	0.0	0.0	4.8	0.0	0.0	-5.2
394	425102.15	5409403.92	349.02	0	E	1000	64.3	21.5	0.0	0.0	0.0	81.6	12.4	-1.3	0.0	0.0	4.8	0.0	0.0	-11.7
394	425102.15	5409403.92	349.02	0	E	2000	62.1	21.5	0.0	0.0	0.0	81.6	32.8	-1.3	0.0	0.0	4.8	0.0	0.0	-34.3
394	425102.15	5409403.92	349.02	0	E	4000	57.2	21.5	0.0	0.0	0.0	81.6	111.2	-1.3	0.0	0.0	4.8	0.0	0.0	-117.6
394	425102.15	5409403.92	349.02	0	E	8000	48.3	21.5	0.0	0.0	0.0	81.6	396.8	-1.3	0.0	0.0	4.8	0.0	0.0	-412.0
404	425777.04	5409373.77	328.24	0	D	32	35.9	20.0	0.0	0.0	0.0	80.4	0.1	-5.7	0.0	0.0	4.8	0.0	0.0	-23.7
404	425777.04	5409373.77	328.24	0	D	63	53.8	20.0	0.0	0.0	0.0	80.4	0.4	-5.7	0.0	0.0	4.8	0.0	0.0	-6.0
404	425777.04	5409373.77	328.24	0	D	125	60.7	20.0	0.0	0.0	0.0	80.4	1.2	2.3	0.0	0.0	2.5	0.0	0.0	-5.7
404	425777.04	5409373.77	328.24	0	D	250	61.5	20.0	0.0	0.0	0.0	80.4	3.1	-0.2	0.0	0.0	4.8	0.0	0.0	-6.7
404	425777.04	5409373.77	328.24	0	D	500	64.9	20.0	0.0	0.0	0.0	80.4	5.7	-1.6	0.0	0.0	4.9	0.0	0.0	-4.5
404	425777.04	5409373.77	328.24	0	D	1000	64.3	20.0	0.0	0.0	0.0	80.4	10.8	-1.6	0.0	0.0	5.1	0.0	0.0	-10.4
404	425777.04	5409373.77	328.24	0	D	2000	62.1	20.0	0.0	0.0	0.0	80.4	28.4	-1.6	0.0	0.0	5.3	0.0	0.0	-30.5
404	425777.04	5409373.77	328.24	0	D	4000	57.2	20.0	0.0	0.0	0.0	80.4	96.5	-1.6	0.0	0.0	5.8	0.0	0.0	-103.9
404	425777.04	5409373.77	328.24	0	D	8000	48.3	20.0	0.0	0.0	0.0	80.4	344.1	-1.6	0.0	0.0	6.7	0.0	0.0	-361.3
404	425777.04	5409373.77	328.24	0	N	32	35.9	20.0	0.0	0.0	0.0	80.4	0.1	-5.7	0.0	0.0	4.8	0.0	0.0	-23.7
404	425777.04	5409373.77	328.24	0	N	63	53.8	20.0	0.0	0.0	0.0	80.4	0.4	-5.7	0.0	0.0	4.8	0.0	0.0	-6.0
404	425777.04	5409373.77	328.24	0	N	125	60.7	20.0	0.0	0.0	0.0	80.4	1.2	2.3	0.0	0.0	2.5	0.0	0.0	-5.7
404	425777.04	5409373.77	328.24	0	N	250	61.5	20.0	0.0	0.0	0.0	80.4	3.1	-0.2	0.0	0.0	4.8	0.0	0.0	-6.7
404	425777.04	5409373.77	328.24	0	N	500	64.9	20.0	0.0	0.0	0.0	80.4	5.7	-1.6	0.0	0.0	4.9	0.0	0.0	-4.5
404	425777.04	5409373.77	328.24	0	N	1000	64.3	20.0	0.0	0.0	0.0	80.4	10.8	-1.6	0.0	0.0	5.1	0.0	0.0	-10.4
404	425777.04	5409373.77	328.24	0	N	2000	62.1	20.0	0.0	0.0	0.0	80.4	28.4	-1.6	0.0	0.0	5.3	0.0	0.0	-30.5
404	425777.04	5409373.77	328.24	0	N	4000	57.2	20.0	0.0	0.0	0.0	80.4	96.5	-1.6	0.0	0.0	5.8	0.0	0.0	-103.9
404	425777.04	5409373.77	328.24	0	N	8000	48.3	20.0	0.0	0.0	0.0	80.4	344.1	-1.6	0.0	0.0	6.7	0.0	0.0	-361.3
404	425777.04	5409373.77	328.24	0	E	32	35.9	20.0	0.0	0.0	0.0	80.4	0.1	-5.7	0.0	0.0	4.8	0.0	0.0	-23.7
404	425777.04	5409373.77	328.24	0	E	63	53.8	20.0	0.0	0.0	0.0	80.4	0.4	-5.7	0.0	0.0	4.8	0.0	0.0	-6.0
404	425777.04	5409373.77	328.24	0	E	125	60.7	20.0	0.0	0.0	0.0	80.4	1.2	2.3	0.0	0.0	2.5	0.0	0.0	-5.7
404	425777.04	5409373.77	328.24	0	E	250	61.5	20.0	0.0	0.0	0.0	80.4	3.1	-0.2	0.0	0.0	4.8	0.0	0.0	-6.7
404	425777.04	5409373.77	328.24	0	E	500	64.9	20.0	0.0	0.0	0.0	80.4	5.7	-1.6	0.0	0.0	4.9	0.0	0.0	-4.5
404	425777.04	5409373.77	328.24	0	E	1000	64.3	20.0	0.0	0.0	0.0	80.4	10.8	-1.6	0.0	0.0	5.1	0.0	0.0	-10.4
404	425777.04	5409373.77	328.24	0	E	2000	62.1	20.0	0.0	0.0	0.0	80.4	28.4	-1.6	0.0	0.0	5.3	0.0	0.0	-30.5
404	425777.04	5409373.77	328.24	0	E	4000	57.2	20.0	0.0	0.0	0.0	80.4	96.5	-1.6	0.0	0.0	5.8	0.0	0.0	-103.9
404	425777.04	5409373.77	328.24	0	E	8000	48.3	20.0	0.0	0.0	0.0	80.4	344.1	-1.6	0.0	0.0	6.7	0.0	0.0	-361.3
485	423795.93	5410301.42	364.00	0	D	32	35.9	21.2	0.0	0.0	0.0	84.9	0.2	-5.8	0.0	0.0	0.0	0.0	0.0	-22.2
485	423795.93	5410301.42	364.00	0	D	63	53.8	21.2	0.0	0.0	0.0	84.9	0.6	-5.8	0.0	0.0	0.0	0.0	0.0	-4.7
485	423795.93	5410301.42	364.00	0	D	125	60.7	21.2	0.0	0.0	0.0	84.9	2.0	2.1	0.0	0.0	0.0	0.0	0.0	-7.2
485	423795.93	5410301.42	364.00	0	D	250	61.5	21.2	0.0	0.0	0.0	84.9	5.2	-0.4	0.0	0.0	0.0	0.0	0.0	-7.1
485	423795.93	5410301.42	364.00	0	D	500	64.9	21.2	0.0	0.0	0.0	84.9	9.6	-1.8	0.0	0.0	0.0	0.0	0.0	-6.7
485	423795.93	5410301.42	364.00	0	D	1000	64.3	21.2	0.0	0.0	0.0	84.9	18.1	-1.8	0.0	0.0	0.0	0.0	0.0	-15.8
485	423795.93	5410301.42	364.00	0	D	2000	62.1	21.2	0.0	0.0	0.0	84.9	47.9	-1.8	0.0	0.0	0.0	0.0	0.0	-47.8
485	423795.93	5410301.42	364.00	0	D	4000	57.2	21.2	0.0	0.0	0.0	84.9	162.4	-1.8	0.0	0.0	0.0	0.0	0.0	-167.2
485	423795.93	5410301.42	364.00	0	D	8000	48.3	21.2	0.0	0.0	0.0	84.9	579.4	-1.8	0.0	0.0	0.0	0.0	0.0	-593.1
485	423795.93	5410301.42	364.00	0	N	32	35.9	21.2	0.0	0.0	0.0	84.9	0.2	-5.8	0.0	0.0	0.0	0.0	0.0	-22.2
485	423795.93	5410301.42	364.00	0	N	63	53.8	21.2	0.0	0.0	0.0	84.9	0.6	-5.8	0.0	0.0	0.0	0.0	0.0	-4.7
485	423795.93	5410301.42	364.00	0	N	125	60.7	21.2	0.0	0.0	0.0	84.9	2.0	2.1	0.0	0.0	0.0	0.0	0.0	-7.2
485	423795.93	5410301.42	364.00	0	N	250	61.5	21.2	0.0	0.0	0.0	84.9	5.2	-0.4	0.0	0.0	0.0	0.0	0.0	-7.1

Line Source, ISO 9613, Name: "TRE_OP-NPAG", ID: ""																					
Nr.	X	Y	Z	Refl.	DEN	Freq.	Lw	l/a	Optime	K0	Dc	Adiv	Aatm	Agr	Afol	Ahous	Abar	Cmet	RL	Lr
	(m)	(m)	(m)			(Hz)	dB(A)	dB	dB	(dB)	(dB)	(dB)	(dB)	(dB)	(dB)	(dB)	(dB)	(dB)	(dB)	dB(A)
485	423795.93	5410301.42	364.00	0	N	500	64.9	21.2	0.0	0.0	0.0	84.9	9.6	-1.8	0.0	0.0	0.0	0.0	0.0	-6.7
485	423795.93	5410301.42	364.00	0	N	1000	64.3	21.2	0.0	0.0	0.0	84.9	18.1	-1.8	0.0	0.0	0.0	0.0	0.0	-15.8
485	423795.93	5410301.42	364.00	0	N	2000	62.1	21.2	0.0	0.0	0.0	84.9	47.9	-1.8	0.0	0.0	0.0	0.0	0.0	-47.8
485	423795.93	5410301.42	364.00	0	N	4000	57.2	21.2	0.0	0.0	0.0	84.9	162.4	-1.8	0.0	0.0	0.0	0.0	0.0	-167.2
485	423795.93	5410301.42	364.00	0	N	8000	48.3	21.2	0.0	0.0	0.0	84.9	579.4	-1.8	0.0	0.0	0.0	0.0	0.0	-593.1
485	423795.93	5410301.42	364.00	0	E	32	35.9	21.2	0.0	0.0	0.0	84.9	0.2	-5.8	0.0	0.0	0.0	0.0	0.0	-22.2
485	423795.93	5410301.42	364.00	0	E	63	53.8	21.2	0.0	0.0	0.0	84.9	0.6	-5.8	0.0	0.0	0.0	0.0	0.0	-4.7
485	423795.93	5410301.42	364.00	0	E	125	60.7	21.2	0.0	0.0	0.0	84.9	2.0	2.1	0.0	0.0	0.0	0.0	0.0	-7.2
485	423795.93	5410301.42	364.00	0	E	250	61.5	21.2	0.0	0.0	0.0	84.9	5.2	-0.4	0.0	0.0	0.0	0.0	0.0	-7.1
485	423795.93	5410301.42	364.00	0	E	500	64.9	21.2	0.0	0.0	0.0	84.9	9.6	-1.8	0.0	0.0	0.0	0.0	0.0	-6.7
485	423795.93	5410301.42	364.00	0	E	1000	64.3	21.2	0.0	0.0	0.0	84.9	18.1	-1.8	0.0	0.0	0.0	0.0	0.0	-15.8
485	423795.93	5410301.42	364.00	0	E	2000	62.1	21.2	0.0	0.0	0.0	84.9	47.9	-1.8	0.0	0.0	0.0	0.0	0.0	-47.8
485	423795.93	5410301.42	364.00	0	E	4000	57.2	21.2	0.0	0.0	0.0	84.9	162.4	-1.8	0.0	0.0	0.0	0.0	0.0	-167.2
485	423795.93	5410301.42	364.00	0	E	8000	48.3	21.2	0.0	0.0	0.0	84.9	579.4	-1.8	0.0	0.0	0.0	0.0	0.0	-593.1
513	424244.57	5410248.06	364.00	0	D	32	35.9	18.3	0.0	0.0	0.0	84.3	0.1	-5.8	0.0	0.0	0.0	0.0	0.0	-24.4
513	424244.57	5410248.06	364.00	0	D	63	53.8	18.3	0.0	0.0	0.0	84.3	0.6	-5.8	0.0	0.0	0.0	0.0	0.0	-6.9
513	424244.57	5410248.06	364.00	0	D	125	60.7	18.3	0.0	0.0	0.0	84.3	1.9	1.6	0.0	0.0	0.0	0.0	0.0	-8.7
513	424244.57	5410248.06	364.00	0	D	250	61.5	18.3	0.0	0.0	0.0	84.3	4.8	-0.9	0.0	0.0	0.0	0.0	0.0	-8.4
513	424244.57	5410248.06	364.00	0	D	500	64.9	18.3	0.0	0.0	0.0	84.3	8.9	-2.2	0.0	0.0	0.0	0.0	0.0	-7.7
513	424244.57	5410248.06	364.00	0	D	1000	64.3	18.3	0.0	0.0	0.0	84.3	16.8	-2.2	0.0	0.0	0.0	0.0	0.0	-16.2
513	424244.57	5410248.06	364.00	0	D	2000	62.1	18.3	0.0	0.0	0.0	84.3	44.4	-2.2	0.0	0.0	0.0	0.0	0.0	-46.0
513	424244.57	5410248.06	364.00	0	D	4000	57.2	18.3	0.0	0.0	0.0	84.3	150.7	-2.2	0.0	0.0	0.0	0.0	0.0	-157.2
513	424244.57	5410248.06	364.00	0	D	8000	48.3	18.3	0.0	0.0	0.0	84.3	537.4	-2.2	0.0	0.0	0.0	0.0	0.0	-552.8
513	424244.57	5410248.06	364.00	0	N	32	35.9	18.3	0.0	0.0	0.0	84.3	0.1	-5.8	0.0	0.0	0.0	0.0	0.0	-24.4
513	424244.57	5410248.06	364.00	0	N	63	53.8	18.3	0.0	0.0	0.0	84.3	0.6	-5.8	0.0	0.0	0.0	0.0	0.0	-6.9
513	424244.57	5410248.06	364.00	0	N	125	60.7	18.3	0.0	0.0	0.0	84.3	1.9	1.6	0.0	0.0	0.0	0.0	0.0	-8.7
513	424244.57	5410248.06	364.00	0	N	250	61.5	18.3	0.0	0.0	0.0	84.3	4.8	-0.9	0.0	0.0	0.0	0.0	0.0	-8.4
513	424244.57	5410248.06	364.00	0	N	500	64.9	18.3	0.0	0.0	0.0	84.3	8.9	-2.2	0.0	0.0	0.0	0.0	0.0	-7.7
513	424244.57	5410248.06	364.00	0	N	1000	64.3	18.3	0.0	0.0	0.0	84.3	16.8	-2.2	0.0	0.0	0.0	0.0	0.0	-16.2
513	424244.57	5410248.06	364.00	0	N	2000	62.1	18.3	0.0	0.0	0.0	84.3	44.4	-2.2	0.0	0.0	0.0	0.0	0.0	-46.0
513	424244.57	5410248.06	364.00	0	N	4000	57.2	18.3	0.0	0.0	0.0	84.3	150.7	-2.2	0.0	0.0	0.0	0.0	0.0	-157.2
513	424244.57	5410248.06	364.00	0	N	8000	48.3	18.3	0.0	0.0	0.0	84.3	537.4	-2.2	0.0	0.0	0.0	0.0	0.0	-552.8
513	424244.57	5410248.06	364.00	0	E	32	35.9	18.3	0.0	0.0	0.0	84.3	0.1	-5.8	0.0	0.0	0.0	0.0	0.0	-24.4
513	424244.57	5410248.06	364.00	0	E	63	53.8	18.3	0.0	0.0	0.0	84.3	0.6	-5.8	0.0	0.0	0.0	0.0	0.0	-6.9
513	424244.57	5410248.06	364.00	0	E	125	60.7	18.3	0.0	0.0	0.0	84.3	1.9	1.6	0.0	0.0	0.0	0.0	0.0	-8.7
513	424244.57	5410248.06	364.00	0	E	250	61.5	18.3	0.0	0.0	0.0	84.3	4.8	-0.9	0.0	0.0	0.0	0.0	0.0	-8.4
513	424244.57	5410248.06	364.00	0	E	500	64.9	18.3	0.0	0.0	0.0	84.3	8.9	-2.2	0.0	0.0	0.0	0.0	0.0	-7.7
513	424244.57	5410248.06	364.00	0	E	1000	64.3	18.3	0.0	0.0	0.0	84.3	16.8	-2.2	0.0	0.0	0.0	0.0	0.0	-16.2
513	424244.57	5410248.06	364.00	0	E	2000	62.1	18.3	0.0	0.0	0.0	84.3	44.4	-2.2	0.0	0.0	0.0	0.0	0.0	-46.0
513	424244.57	5410248.06	364.00	0	E	4000	57.2	18.3	0.0	0.0	0.0	84.3	150.7	-2.2	0.0	0.0	0.0	0.0	0.0	-157.2
513	424244.57	5410248.06	364.00	0	E	8000	48.3	18.3	0.0	0.0	0.0	84.3	537.4	-2.2	0.0	0.0	0.0	0.0	0.0	-552.8
533	425820.22	5409402.51	327.37	0	D	32	35.9	11.5	0.0	0.0	0.0	80.4	0.1	-5.7	0.0	0.0	4.8	0.0	0.0	-32.2
533	425820.22	5409402.51	327.37	0	D	63	53.8	11.5	0.0	0.0	0.0	80.4	0.4	-5.7	0.0	0.0	4.8	0.0	0.0	-14.6
533	425820.22	5409402.51	327.37	0	D	125	60.7	11.5	0.0	0.0	0.0	80.4	1.2	2.2	0.0	0.0	2.6	0.0	0.0	-14.2
533	425820.22	5409402.51	327.37	0	D	250	61.5	11.5	0.0	0.0	0.0	80.4	3.1	-0.2	0.0	0.0	4.8	0.0	0.0	-15.1
533	425820.22	5409402.51	327.37	0	D	500	64.9	11.5	0.0	0.0	0.0	80.4	5.7	-1.6	0.0	0.0	4.8	0.0	0.0	-12.9
533	425820.22	5409402.51	327.37	0	D	1000	64.3	11.5	0.0	0.0	0.0	80.4	10.8	-1.6	0.0	0.0	4.8	0.0	0.0	-18.6
533	425820.22	5409402.51	327.37	0	D	2000	62.1	11.5	0.0	0.0	0.0	80.4	28.4	-1.6	0.0	0.0	4.8	0.0	0.0	-38.5
533	425820.22	5409402.51	327.37	0	D	4000	57.2	11.5	0.0	0.0	0.0	80.4	96.4	-1.6	0.0	0.0	4.9	0.0	0.0	-111.5
533	425820.22	5409402.51	327.37	0	D	8000	48.3	11.5	0.0	0.0	0.0	80.4	344.0	-1.6	0.0	0.0	5.0	0.0	0.0	-368.0
533	425820.22	5409402.51	327.37	0	N	32	35.9	11.5	0.0	0.0	0.0	80.4	0.1	-5.7	0.0	0.0	4.8	0.0	0.0	-32.2
533	425820.22	5409402.51	327.37	0	N	63	53.8	11.5	0.0	0.0	0.0	80.4	0.4	-5.7	0.0	0.0	4.8	0.0	0.0	-14.6
533	425820.22	5409402.51	327.37	0	N	125	60.7	11.5	0.0	0.0	0.0	80.4	1.2	2.2	0.0	0.0	2.6	0.0	0.0	-14.2
533	425820.22	5409402.51	327.37	0	N	250	61.5	11.5	0.0	0.0	0.0	80.4	3.1	-0.2	0.0	0.0	4.8	0.0	0.0	-15.1
533	425820.22	5409402.51	327.37	0	N	500	64.9	11.5	0.0	0.0	0.0	80.4	5.7	-1.6	0.0	0.0	4.8	0.0	0.0	-12.9
533	425820.22	5409402.51	327.37	0	N	1000	64.3	11.5	0.0	0.0	0.0	80.4	10.8	-1.6	0.0	0.0	4.8	0.0	0.0	-18.6
533	425820.22	5409402.51	327.37	0	N	2000	62.1	11.5	0.0	0.0	0.0	80.4	28.4	-1.6	0.0	0.0	4.8	0.0	0.0	-38.5
533	425820.22	5409402.51	327.37	0	N	4000	57.2	11.5	0.0	0.0	0.0	80.4	96.4	-1.6	0.0	0.0	4.9	0.0	0.0	-111.5
533	425820.22	5409402.51	327.37	0	N	8000	48.3	11.5	0.0	0.0	0.0	80.4	344.0	-1.6	0.0	0.0	5.0	0.0	0.0	-368.0
533	425820.22	5409402.51	327.37	0	E	32	35.9	11.5	0.0	0.0	0.0	80.4	0.1	-5.7	0.0	0.0	4.8	0.0	0.0	-32.2
533	425820.22	5409402.51	327.37	0	E	63	53.8	11.5	0.0	0.0	0.0	80.4	0.4	-5.7	0.0	0.0	4.8	0.0	0.0	-14.6
533	425820.22	5409402.51	327.37	0	E	125	60.7	11.5	0.0	0.0	0.0	80.4	1.2	2.2	0.0	0.0	2.6	0.0	0.0	-14.2
533	425820.22	5409402.51	327.37	0	E	250	61.5	11.5	0.0	0.0	0.0	80.4	3.1	-0.2	0.0	0.0	4.8	0.0	0.0	-15.1

Line Source, ISO 9613, Name: "TRE_OP-NPAG", ID: ""																				
Nr.	X	Y	Z	Refl.	DEN	Freq.	Lw	l/a	Optime	K0	Dc	Adiv	Aatm	Agr	Afol	Ahous	Abar	Cmet	RL	Lr
	(m)	(m)	(m)			(Hz)	dB(A)	dB	dB	(dB)	(dB)	(dB)	(dB)	(dB)	(dB)	(dB)	(dB)	(dB)	(dB)	dB(A)
533	425820.22	5409402.51	327.37	0	E	500	64.9	11.5	0.0	0.0	0.0	80.4	5.7	-1.6	0.0	0.0	4.8	0.0	0.0	-12.9
533	425820.22	5409402.51	327.37	0	E	1000	64.3	11.5	0.0	0.0	0.0	80.4	10.8	-1.6	0.0	0.0	4.8	0.0	0.0	-18.6
533	425820.22	5409402.51	327.37	0	E	2000	62.1	11.5	0.0	0.0	0.0	80.4	28.4	-1.6	0.0	0.0	4.8	0.0	0.0	-38.5
533	425820.22	5409402.51	327.37	0	E	4000	57.2	11.5	0.0	0.0	0.0	80.4	96.4	-1.6	0.0	0.0	4.9	0.0	0.0	-111.5
533	425820.22	5409402.51	327.37	0	E	8000	48.3	11.5	0.0	0.0	0.0	80.4	344.0	-1.6	0.0	0.0	5.0	0.0	0.0	-368.0

Line Source, ISO 9613, Name: "TRL_TMA2", ID: ""																				
Nr.	X	Y	Z	Refl.	DEN	Freq.	Lw	l/a	Optime	K0	Dc	Adiv	Aatm	Agr	Afol	Ahous	Abar	Cmet	RL	Lr
	(m)	(m)	(m)			(Hz)	dB(A)	dB	dB	(dB)	(dB)	(dB)	(dB)	(dB)	(dB)	(dB)	(dB)	(dB)	(dB)	dB(A)
430	423803.09	5411793.77	364.95	0	DEN	32	25.2	26.0	0.0	0.0	0.0	86.7	0.2	-5.9	0.0	0.0	4.8	0.0	0.0	-34.5
430	423803.09	5411793.77	364.95	0	DEN	63	50.7	26.0	0.0	0.0	0.0	86.7	0.7	-5.9	0.0	0.0	4.8	0.0	0.0	-9.5
430	423803.09	5411793.77	364.95	0	DEN	125	57.1	26.0	0.0	0.0	0.0	86.7	2.5	0.8	0.0	0.0	4.0	0.0	0.0	-10.7
430	423803.09	5411793.77	364.95	0	DEN	250	64.0	26.0	0.0	0.0	0.0	86.7	6.3	-1.7	0.0	0.0	4.8	0.0	0.0	-6.0
430	423803.09	5411793.77	364.95	0	DEN	500	61.9	26.0	0.0	0.0	0.0	86.7	11.7	-3.0	0.0	0.0	4.8	0.0	0.0	-12.1
430	423803.09	5411793.77	364.95	0	DEN	1000	63.0	26.0	0.0	0.0	0.0	86.7	22.2	-3.0	0.0	0.0	4.8	0.0	0.0	-21.5
430	423803.09	5411793.77	364.95	0	DEN	2000	60.1	26.0	0.0	0.0	0.0	86.7	58.6	-3.0	0.0	0.0	4.8	0.0	0.0	-60.8
430	423803.09	5411793.77	364.95	0	DEN	4000	55.1	26.0	0.0	0.0	0.0	86.7	198.6	-3.0	0.0	0.0	4.8	0.0	0.0	-205.8
430	423803.09	5411793.77	364.95	0	DEN	8000	46.0	26.0	0.0	0.0	0.0	86.7	708.5	-3.0	0.0	0.0	4.8	0.0	0.0	-724.8
469	424198.07	5412164.04	368.44	0	DEN	32	25.2	24.8	0.0	0.0	0.0	86.8	0.2	-5.9	0.0	0.0	0.0	0.0	0.0	-31.1
469	424198.07	5412164.04	368.44	0	DEN	63	50.7	24.8	0.0	0.0	0.0	86.8	0.7	-5.9	0.0	0.0	0.0	0.0	0.0	-6.1
469	424198.07	5412164.04	368.44	0	DEN	125	57.1	24.8	0.0	0.0	0.0	86.8	2.5	1.3	0.0	0.0	0.0	0.0	0.0	-8.7
469	424198.07	5412164.04	368.44	0	DEN	250	64.0	24.8	0.0	0.0	0.0	86.8	6.4	-1.2	0.0	0.0	0.0	0.0	0.0	-3.2
469	424198.07	5412164.04	368.44	0	DEN	500	61.9	24.8	0.0	0.0	0.0	86.8	11.8	-2.6	0.0	0.0	0.0	0.0	0.0	-9.3
469	424198.07	5412164.04	368.44	0	DEN	1000	63.0	24.8	0.0	0.0	0.0	86.8	22.5	-2.6	0.0	0.0	0.0	0.0	0.0	-18.9
469	424198.07	5412164.04	368.44	0	DEN	2000	60.1	24.8	0.0	0.0	0.0	86.8	59.4	-2.6	0.0	0.0	0.0	0.0	0.0	-58.7
469	424198.07	5412164.04	368.44	0	DEN	4000	55.1	24.8	0.0	0.0	0.0	86.8	201.3	-2.6	0.0	0.0	0.0	0.0	0.0	-205.6
469	424198.07	5412164.04	368.44	0	DEN	8000	46.0	24.8	0.0	0.0	0.0	86.8	718.0	-2.6	0.0	0.0	0.0	0.0	0.0	-731.4
482	424340.54	5412413.98	370.87	0	DEN	32	25.2	24.5	0.0	0.0	0.0	87.0	0.2	-5.9	0.0	0.0	0.0	0.0	0.0	-31.6
482	424340.54	5412413.98	370.87	0	DEN	63	50.7	24.5	0.0	0.0	0.0	87.0	0.8	-5.9	0.0	0.0	0.0	0.0	0.0	-6.6
482	424340.54	5412413.98	370.87	0	DEN	125	57.1	24.5	0.0	0.0	0.0	87.0	2.6	1.5	0.0	0.0	0.0	0.0	0.0	-9.4
482	424340.54	5412413.98	370.87	0	DEN	250	64.0	24.5	0.0	0.0	0.0	87.0	6.6	-1.0	0.0	0.0	0.0	0.0	0.0	-4.0
482	424340.54	5412413.98	370.87	0	DEN	500	61.9	24.5	0.0	0.0	0.0	87.0	12.1	-2.4	0.0	0.0	0.0	0.0	0.0	-10.3
482	424340.54	5412413.98	370.87	0	DEN	1000	63.0	24.5	0.0	0.0	0.0	87.0	23.0	-2.4	0.0	0.0	0.0	0.0	0.0	-20.1
482	424340.54	5412413.98	370.87	0	DEN	2000	60.1	24.5	0.0	0.0	0.0	87.0	60.7	-2.4	0.0	0.0	0.0	0.0	0.0	-60.7
482	424340.54	5412413.98	370.87	0	DEN	4000	55.1	24.5	0.0	0.0	0.0	87.0	206.0	-2.4	0.0	0.0	0.0	0.0	0.0	-210.9
482	424340.54	5412413.98	370.87	0	DEN	8000	46.0	24.5	0.0	0.0	0.0	87.0	734.6	-2.4	0.0	0.0	0.0	0.0	0.0	-748.7
497	424100.59	5411926.59	365.54	0	DEN	32	25.2	23.3	0.0	0.0	0.0	86.6	0.2	-5.9	0.0	0.0	4.8	0.0	0.0	-37.1
497	424100.59	5411926.59	365.54	0	DEN	63	50.7	23.3	0.0	0.0	0.0	86.6	0.7	-5.9	0.0	0.0	4.8	0.0	0.0	-12.1
497	424100.59	5411926.59	365.54	0	DEN	125	57.1	23.3	0.0	0.0	0.0	86.6	2.5	1.2	0.0	0.0	3.6	0.0	0.0	-13.3
497	424100.59	5411926.59	365.54	0	DEN	250	64.0	23.3	0.0	0.0	0.0	86.6	6.3	-1.3	0.0	0.0	4.8	0.0	0.0	-8.9
497	424100.59	5411926.59	365.54	0	DEN	500	61.9	23.3	0.0	0.0	0.0	86.6	11.6	-2.7	0.0	0.0	4.8	0.0	0.0	-14.9
497	424100.59	5411926.59	365.54	0	DEN	1000	63.0	23.3	0.0	0.0	0.0	86.6	21.9	-2.7	0.0	0.0	4.8	0.0	0.0	-24.2
497	424100.59	5411926.59	365.54	0	DEN	2000	60.1	23.3	0.0	0.0	0.0	86.6	58.0	-2.7	0.0	0.0	4.8	0.0	0.0	-63.1
497	424100.59	5411926.59	365.54	0	DEN	4000	55.1	23.3	0.0	0.0	0.0	86.6	196.5	-2.7	0.0	0.0	4.8	0.0	0.0	-206.7
497	424100.59	5411926.59	365.54	0	DEN	8000	46.0	23.3	0.0	0.0	0.0	86.6	701.0	-2.7	0.0	0.0	4.8	0.0	0.0	-720.2
503	423611.27	5411703.78	364.95	0	DEN	32	25.2	22.8	0.0	0.0	0.0	86.7	0.2	-5.9	0.0	0.0	0.0	0.0	0.0	-33.0
503	423611.27	5411703.78	364.95	0	DEN	63	50.7	22.8	0.0	0.0	0.0	86.7	0.7	-5.9	0.0	0.0	0.0	0.0	0.0	-8.1
503	423611.27	5411703.78	364.95	0	DEN	125	57.1	22.8	0.0	0.0	0.0	86.7	2.5	0.8	0.0	0.0	0.0	0.0	0.0	-10.1
503	423611.27	5411703.78	364.95	0	DEN	250	64.0	22.8	0.0	0.0	0.0	86.7	6.4	-1.6	0.0	0.0	0.0	0.0	0.0	-4.6
503	423611.27	5411703.78	364.95	0	DEN	500	61.9	22.8	0.0	0.0	0.0	86.7	11.8	-3.0	0.0	0.0	0.0	0.0	0.0	-10.8
503	423611.27	5411703.78	364.95	0	DEN	1000	63.0	22.8	0.0	0.0	0.0	86.7	22.3	-3.0	0.0	0.0	0.0	0.0	0.0	-20.2
503	423611.27	5411703.78	364.95	0	DEN	2000	60.1	22.8	0.0	0.0	0.0	86.7	59.0	-3.0	0.0	0.0	0.0	0.0	0.0	-59.8
503	423611.27	5411703.78	364.95	0	DEN	4000	55.1	22.8	0.0	0.0	0.0	86.7	200.2	-3.0	0.0	0.0	0.0	0.0	0.0	-206.0
503	423611.27	5411703.78	364.95	0	DEN	8000	46.0	22.8	0.0	0.0	0.0	86.7	714.0	-3.0	0.0	0.0	0.0	0.0	0.0	-728.9
527	423576.63	5411590.41	364.00	0	DEN	32	25.2	19.8	0.0	0.0	0.0	86.6	0.2	-5.9	0.0	0.0	0.0	0.0	0.0	-35.9
527	423576.63	5411590.41	364.00	0	DEN	63	50.7	19.8	0.0	0.0	0.0	86.6	0.7	-5.9	0.0	0.0	0.0	0.0	0.0	-10.9
527	423576.63	5411590.41	364.00	0	DEN	125	57.1	19.8	0.0	0.0	0.0	86.6	2.5	0.9	0.0	0.0	0.0	0.0	0.0	-13.0
527	423576.63	5411590.41	364.00	0	DEN	250	64.0	19.8	0.0	0.0	0.0	86.6	6.3	-1.6	0.0	0.0	0.0	0.0	0.0	-7.5
527	423576.63	5411590.41	364.00	0	DEN	500	61.9	19.8	0.0	0.0	0.0	86.6	11.7	-3.0	0.0	0.0	0.0	0.0	0.0	-13.5
527	423576.63	5411590.41	364.00	0	DEN	1000	63.0	19.8	0.0	0.0	0.0	86.6	22.1	-3.0	0.0	0.0	0.0	0.0	0.0	-22.9
527	423576.63	5411590.41	364.00	0	DEN	2000	60.1	19.8	0.0	0.0	0.0	86.6	58.4	-3.0	0.0	0.0	0.0	0.0	0.0	-62.1
527	423576.63	5411590.41	364.00	0	DEN	4000	55.1	19.8	0.0	0.0	0.0	86.6	198.0	-3.0	0.0	0.0	0.0	0.0	0.0	-206.7
527	423576.63	5411590.41	364.00	0	DEN	8000	46.0	19.8	0.0	0.0	0.0	86.6	706.3	-3.0	0.0	0.0	0.0	0.0	0.0	-724.1

Line Source, ISO 9613, Name: "TRL_TMA2", ID: ""																				
Nr.	X	Y	Z	Refl.	DEN	Freq.	Lw	l/a	Optime	K0	Dc	Adiv	Aatm	Agr	Afol	Ahous	Abar	Cmet	RL	Lr
	(m)	(m)	(m)			(Hz)	dB(A)	dB	dB	(dB)	(dB)	(dB)	(dB)	(dB)	(dB)	(dB)	(dB)	(dB)	(dB)	dB(A)
540	424033.10	5411807.95	364.00	0	DEN	32	25.2	18.4	0.0	0.0	0.0	86.5	0.2	-5.9	0.0	0.0	4.8	0.0	0.0	-42.0
540	424033.10	5411807.95	364.00	0	DEN	63	50.7	18.4	0.0	0.0	0.0	86.5	0.7	-5.9	0.0	0.0	4.8	0.0	0.0	-17.0
540	424033.10	5411807.95	364.00	0	DEN	125	57.1	18.4	0.0	0.0	0.0	86.5	2.4	1.1	0.0	0.0	3.7	0.0	0.0	-18.2
540	424033.10	5411807.95	364.00	0	DEN	250	64.0	18.4	0.0	0.0	0.0	86.5	6.2	-1.4	0.0	0.0	4.8	0.0	0.0	-13.6
540	424033.10	5411807.95	364.00	0	DEN	500	61.9	18.4	0.0	0.0	0.0	86.5	11.4	-2.9	0.0	0.0	4.8	0.0	0.0	-19.5
540	424033.10	5411807.95	364.00	0	DEN	1000	63.0	18.4	0.0	0.0	0.0	86.5	21.7	-2.9	0.0	0.0	4.8	0.0	0.0	-28.7
540	424033.10	5411807.95	364.00	0	DEN	2000	60.1	18.4	0.0	0.0	0.0	86.5	57.4	-2.9	0.0	0.0	4.8	0.0	0.0	-67.2
540	424033.10	5411807.95	364.00	0	DEN	4000	55.1	18.4	0.0	0.0	0.0	86.5	194.6	-2.9	0.0	0.0	4.8	0.0	0.0	-209.4
540	424033.10	5411807.95	364.00	0	DEN	8000	46.0	18.4	0.0	0.0	0.0	86.5	694.0	-2.9	0.0	0.0	4.8	0.0	0.0	-718.0

Line Source, ISO 9613, Name: "TRE_TMA2", ID: ""																				
Nr.	X	Y	Z	Refl.	DEN	Freq.	Lw	l/a	Optime	K0	Dc	Adiv	Aatm	Agr	Afol	Ahous	Abar	Cmet	RL	Lr
	(m)	(m)	(m)			(Hz)	dB(A)	dB	dB	(dB)	(dB)	(dB)	(dB)	(dB)	(dB)	(dB)	(dB)	(dB)	(dB)	dB(A)
429	423803.09	5411793.77	364.95	0	DEN	32	25.2	26.0	0.0	0.0	0.0	86.7	0.2	-5.9	0.0	0.0	4.8	0.0	0.0	-34.5
429	423803.09	5411793.77	364.95	0	DEN	63	50.7	26.0	0.0	0.0	0.0	86.7	0.7	-5.9	0.0	0.0	4.8	0.0	0.0	-9.5
429	423803.09	5411793.77	364.95	0	DEN	125	57.1	26.0	0.0	0.0	0.0	86.7	2.5	0.8	0.0	0.0	4.0	0.0	0.0	-10.7
429	423803.09	5411793.77	364.95	0	DEN	250	64.0	26.0	0.0	0.0	0.0	86.7	6.3	-1.7	0.0	0.0	4.8	0.0	0.0	-6.0
429	423803.09	5411793.77	364.95	0	DEN	500	61.9	26.0	0.0	0.0	0.0	86.7	11.7	-3.0	0.0	0.0	4.8	0.0	0.0	-12.1
429	423803.09	5411793.77	364.95	0	DEN	1000	63.0	26.0	0.0	0.0	0.0	86.7	22.2	-3.0	0.0	0.0	4.8	0.0	0.0	-21.5
429	423803.09	5411793.77	364.95	0	DEN	2000	60.1	26.0	0.0	0.0	0.0	86.7	58.6	-3.0	0.0	0.0	4.8	0.0	0.0	-60.8
429	423803.09	5411793.77	364.95	0	DEN	4000	55.1	26.0	0.0	0.0	0.0	86.7	198.6	-3.0	0.0	0.0	4.8	0.0	0.0	-205.8
429	423803.09	5411793.77	364.95	0	DEN	8000	46.0	26.0	0.0	0.0	0.0	86.7	708.5	-3.0	0.0	0.0	4.8	0.0	0.0	-724.8
470	424198.07	5412164.04	368.44	0	DEN	32	25.2	24.8	0.0	0.0	0.0	86.8	0.2	-5.9	0.0	0.0	0.0	0.0	0.0	-31.1
470	424198.07	5412164.04	368.44	0	DEN	63	50.7	24.8	0.0	0.0	0.0	86.8	0.7	-5.9	0.0	0.0	0.0	0.0	0.0	-6.1
470	424198.07	5412164.04	368.44	0	DEN	125	57.1	24.8	0.0	0.0	0.0	86.8	2.5	1.3	0.0	0.0	0.0	0.0	0.0	-8.7
470	424198.07	5412164.04	368.44	0	DEN	250	64.0	24.8	0.0	0.0	0.0	86.8	6.4	-1.2	0.0	0.0	0.0	0.0	0.0	-3.2
470	424198.07	5412164.04	368.44	0	DEN	500	61.9	24.8	0.0	0.0	0.0	86.8	11.8	-2.6	0.0	0.0	0.0	0.0	0.0	-9.3
470	424198.07	5412164.04	368.44	0	DEN	1000	63.0	24.8	0.0	0.0	0.0	86.8	22.5	-2.6	0.0	0.0	0.0	0.0	0.0	-18.9
470	424198.07	5412164.04	368.44	0	DEN	2000	60.1	24.8	0.0	0.0	0.0	86.8	59.4	-2.6	0.0	0.0	0.0	0.0	0.0	-58.7
470	424198.07	5412164.04	368.44	0	DEN	4000	55.1	24.8	0.0	0.0	0.0	86.8	201.3	-2.6	0.0	0.0	0.0	0.0	0.0	-205.6
470	424198.07	5412164.04	368.44	0	DEN	8000	46.0	24.8	0.0	0.0	0.0	86.8	718.0	-2.6	0.0	0.0	0.0	0.0	0.0	-731.4
483	424340.54	5412413.98	370.87	0	DEN	32	25.2	24.5	0.0	0.0	0.0	87.0	0.2	-5.9	0.0	0.0	0.0	0.0	0.0	-31.6
483	424340.54	5412413.98	370.87	0	DEN	63	50.7	24.5	0.0	0.0	0.0	87.0	0.8	-5.9	0.0	0.0	0.0	0.0	0.0	-6.6
483	424340.54	5412413.98	370.87	0	DEN	125	57.1	24.5	0.0	0.0	0.0	87.0	2.6	1.5	0.0	0.0	0.0	0.0	0.0	-9.4
483	424340.54	5412413.98	370.87	0	DEN	250	64.0	24.5	0.0	0.0	0.0	87.0	6.6	-1.0	0.0	0.0	0.0	0.0	0.0	-4.0
483	424340.54	5412413.98	370.87	0	DEN	500	61.9	24.5	0.0	0.0	0.0	87.0	12.1	-2.4	0.0	0.0	0.0	0.0	0.0	-10.3
483	424340.54	5412413.98	370.87	0	DEN	1000	63.0	24.5	0.0	0.0	0.0	87.0	23.0	-2.4	0.0	0.0	0.0	0.0	0.0	-20.1
483	424340.54	5412413.98	370.87	0	DEN	2000	60.1	24.5	0.0	0.0	0.0	87.0	60.7	-2.4	0.0	0.0	0.0	0.0	0.0	-60.7
483	424340.54	5412413.98	370.87	0	DEN	4000	55.1	24.5	0.0	0.0	0.0	87.0	206.0	-2.4	0.0	0.0	0.0	0.0	0.0	-210.9
483	424340.54	5412413.98	370.87	0	DEN	8000	46.0	24.5	0.0	0.0	0.0	87.0	734.6	-2.4	0.0	0.0	0.0	0.0	0.0	-748.7
496	424100.59	5411926.59	365.54	0	DEN	32	25.2	23.3	0.0	0.0	0.0	86.6	0.2	-5.9	0.0	0.0	4.8	0.0	0.0	-37.1
496	424100.59	5411926.59	365.54	0	DEN	63	50.7	23.3	0.0	0.0	0.0	86.6	0.7	-5.9	0.0	0.0	4.8	0.0	0.0	-12.1
496	424100.59	5411926.59	365.54	0	DEN	125	57.1	23.3	0.0	0.0	0.0	86.6	2.5	1.2	0.0	0.0	3.6	0.0	0.0	-13.3
496	424100.59	5411926.59	365.54	0	DEN	250	64.0	23.3	0.0	0.0	0.0	86.6	6.3	-1.3	0.0	0.0	4.8	0.0	0.0	-8.9
496	424100.59	5411926.59	365.54	0	DEN	500	61.9	23.3	0.0	0.0	0.0	86.6	11.6	-2.7	0.0	0.0	4.8	0.0	0.0	-14.9
496	424100.59	5411926.59	365.54	0	DEN	1000	63.0	23.3	0.0	0.0	0.0	86.6	21.9	-2.7	0.0	0.0	4.8	0.0	0.0	-24.2
496	424100.59	5411926.59	365.54	0	DEN	2000	60.1	23.3	0.0	0.0	0.0	86.6	58.0	-2.7	0.0	0.0	4.8	0.0	0.0	-63.1
496	424100.59	5411926.59	365.54	0	DEN	4000	55.1	23.3	0.0	0.0	0.0	86.6	196.5	-2.7	0.0	0.0	4.8	0.0	0.0	-206.7
496	424100.59	5411926.59	365.54	0	DEN	8000	46.0	23.3	0.0	0.0	0.0	86.6	701.0	-2.7	0.0	0.0	4.8	0.0	0.0	-720.2
502	423611.27	5411703.78	364.95	0	DEN	32	25.2	22.8	0.0	0.0	0.0	86.7	0.2	-5.9	0.0	0.0	0.0	0.0	0.0	-33.0
502	423611.27	5411703.78	364.95	0	DEN	63	50.7	22.8	0.0	0.0	0.0	86.7	0.7	-5.9	0.0	0.0	0.0	0.0	0.0	-8.1
502	423611.27	5411703.78	364.95	0	DEN	125	57.1	22.8	0.0	0.0	0.0	86.7	2.5	0.8	0.0	0.0	0.0	0.0	0.0	-10.1
502	423611.27	5411703.78	364.95	0	DEN	250	64.0	22.8	0.0	0.0	0.0	86.7	6.4	-1.6	0.0	0.0	0.0	0.0	0.0	-4.6
502	423611.27	5411703.78	364.95	0	DEN	500	61.9	22.8	0.0	0.0	0.0	86.7	11.8	-3.0	0.0	0.0	0.0	0.0	0.0	-10.8
502	423611.27	5411703.78	364.95	0	DEN	1000	63.0	22.8	0.0	0.0	0.0	86.7	22.3	-3.0	0.0	0.0	0.0	0.0	0.0	-20.2
502	423611.27	5411703.78	364.95	0	DEN	2000	60.1	22.8	0.0	0.0	0.0	86.7	59.0	-3.0	0.0	0.0	0.0	0.0	0.0	-59.8
502	423611.27	5411703.78	364.95	0	DEN	4000	55.1	22.8	0.0	0.0	0.0	86.7	200.2	-3.0	0.0	0.0	0.0	0.0	0.0	-206.0
502	423611.27	5411703.78	364.95	0	DEN	8000	46.0	22.8	0.0	0.0	0.0	86.7	714.0	-3.0	0.0	0.0	0.0	0.0	0.0	-728.9
526	423576.63	5411590.41	364.00	0	DEN	32	25.2	19.8	0.0	0.0	0.0	86.6	0.2	-5.9	0.0	0.0	0.0	0.0	0.0	-35.9
526	423576.63	5411590.41	364.00	0	DEN	63	50.7	19.8	0.0	0.0	0.0	86.6	0.7	-5.9	0.0	0.0	0.0	0.0	0.0	-10.9
526	423576.63	5411590.41	364.00	0	DEN	125	57.1	19.8	0.0	0.0	0.0	86.6	2.5	0.9	0.0	0.0	0.0	0.0	0.0	-13.0
526	423576.63	5411590.41	364.00	0	DEN	250	64.0	19.8	0.0	0.0	0.0	86.6	6.3	-1.6	0.0	0.0	0.0	0.0	0.0	-7.5
526	423576.63	5411590.41	364.00	0	DEN	500	61.9	19.8	0.0	0.0	0.0	86.6	11.7	-3.0	0.0	0.0	0.0	0.0	0.0	-13.5

Line Source, ISO 9613, Name: "TRE_TMA2", ID: ""																					
Nr.	X	Y	Z	Refl.	DEN	Freq.	Lw	l/a	Optime	K0	Dc	Adiv	Aatm	Agr	Afol	Ahous	Abar	Cmet	RL	Lr
	(m)	(m)	(m)			(Hz)	dB(A)	dB	dB	(dB)	(dB)	(dB)	(dB)	(dB)	(dB)	(dB)	(dB)	(dB)	(dB)	dB(A)
526	423576.63	5411590.41	364.00	0	DEN	1000	63.0	19.8	0.0	0.0	0.0	86.6	22.1	-3.0	0.0	0.0	0.0	0.0	0.0	-22.9
526	423576.63	5411590.41	364.00	0	DEN	2000	60.1	19.8	0.0	0.0	0.0	86.6	58.4	-3.0	0.0	0.0	0.0	0.0	0.0	-62.1
526	423576.63	5411590.41	364.00	0	DEN	4000	55.1	19.8	0.0	0.0	0.0	86.6	198.0	-3.0	0.0	0.0	0.0	0.0	0.0	-206.7
526	423576.63	5411590.41	364.00	0	DEN	8000	46.0	19.8	0.0	0.0	0.0	86.6	706.3	-3.0	0.0	0.0	0.0	0.0	0.0	-724.1
541	424033.10	5411807.95	364.00	0	DEN	32	25.2	18.4	0.0	0.0	0.0	86.5	0.2	-5.9	0.0	0.0	4.8	0.0	0.0	-42.0
541	424033.10	5411807.95	364.00	0	DEN	63	50.7	18.4	0.0	0.0	0.0	86.5	0.7	-5.9	0.0	0.0	4.8	0.0	0.0	-17.0
541	424033.10	5411807.95	364.00	0	DEN	125	57.1	18.4	0.0	0.0	0.0	86.5	2.4	1.1	0.0	0.0	3.7	0.0	0.0	-18.2
541	424033.10	5411807.95	364.00	0	DEN	250	64.0	18.4	0.0	0.0	0.0	86.5	6.2	-1.4	0.0	0.0	4.8	0.0	0.0	-13.6
541	424033.10	5411807.95	364.00	0	DEN	500	61.9	18.4	0.0	0.0	0.0	86.5	11.4	-2.9	0.0	0.0	4.8	0.0	0.0	-19.5
541	424033.10	5411807.95	364.00	0	DEN	1000	63.0	18.4	0.0	0.0	0.0	86.5	21.7	-2.9	0.0	0.0	4.8	0.0	0.0	-28.7
541	424033.10	5411807.95	364.00	0	DEN	2000	60.1	18.4	0.0	0.0	0.0	86.5	57.4	-2.9	0.0	0.0	4.8	0.0	0.0	-67.2
541	424033.10	5411807.95	364.00	0	DEN	4000	55.1	18.4	0.0	0.0	0.0	86.5	194.6	-2.9	0.0	0.0	4.8	0.0	0.0	-209.4
541	424033.10	5411807.95	364.00	0	DEN	8000	46.0	18.4	0.0	0.0	0.0	86.5	694.0	-2.9	0.0	0.0	4.8	0.0	0.0	-718.0

Point Source, ISO 9613, Name: "PG1", ID: ""																					
Nr.	X	Y	Z	Refl.	DEN	Freq.	Lw	l/a	Optime	K0	Dc	Adiv	Aatm	Agr	Afol	Ahous	Abar	Cmet	RL	Lr
	(m)	(m)	(m)			(Hz)	dB(A)	dB	dB	(dB)	(dB)	(dB)	(dB)	(dB)	(dB)	(dB)	(dB)	(dB)	(dB)	dB(A)
545	415588.16	5407043.32	348.50	0	DEN	500	92.2	0.0	0.0	0.0	0.0	92.5	22.9	0.1	0.0	0.0	4.7	0.0	0.0	-27.9

Line Source, ISO 9613, Name: "TRE_OP-TMA", ID: ""																					
Nr.	X	Y	Z	Refl.	DEN	Freq.	Lw	l/a	Optime	K0	Dc	Adiv	Aatm	Agr	Afol	Ahous	Abar	Cmet	RL	Lr
	(m)	(m)	(m)			(Hz)	dB(A)	dB	dB	(dB)	(dB)	(dB)	(dB)	(dB)	(dB)	(dB)	(dB)	(dB)	(dB)	dB(A)
354	424882.86	5409587.72	350.54	0	DEN	32	32.4	26.3	0.0	0.0	0.0	82.3	0.1	-5.8	0.0	0.0	4.8	0.0	0.0	-22.6
354	424882.86	5409587.72	350.54	0	DEN	63	50.3	26.3	0.0	0.0	0.0	82.3	0.4	-5.8	0.0	0.0	4.8	0.0	0.0	-5.1
354	424882.86	5409587.72	350.54	0	DEN	125	57.2	26.3	0.0	0.0	0.0	82.3	1.5	2.2	0.0	0.0	2.6	0.0	0.0	-5.0
354	424882.86	5409587.72	350.54	0	DEN	250	58.0	26.3	0.0	0.0	0.0	82.3	3.8	-0.3	0.0	0.0	4.8	0.0	0.0	-6.3
354	424882.86	5409587.72	350.54	0	DEN	500	61.4	26.3	0.0	0.0	0.0	82.3	7.1	-1.7	0.0	0.0	4.8	0.0	0.0	-4.7
354	424882.86	5409587.72	350.54	0	DEN	1000	60.8	26.3	0.0	0.0	0.0	82.3	13.5	-1.7	0.0	0.0	4.8	0.0	0.0	-11.7
354	424882.86	5409587.72	350.54	0	DEN	2000	58.6	26.3	0.0	0.0	0.0	82.3	35.6	-1.7	0.0	0.0	4.8	0.0	0.0	-36.0
354	424882.86	5409587.72	350.54	0	DEN	4000	53.7	26.3	0.0	0.0	0.0	82.3	120.6	-1.7	0.0	0.0	4.8	0.0	0.0	-125.9
354	424882.86	5409587.72	350.54	0	DEN	8000	44.8	26.3	0.0	0.0	0.0	82.3	430.0	-1.7	0.0	0.0	4.8	0.0	0.0	-444.3
362	425584.45	5409336.16	338.66	0	DEN	32	32.4	24.7	0.0	0.0	0.0	80.6	0.1	-5.7	0.0	0.0	4.8	0.0	0.0	-22.6
362	425584.45	5409336.16	338.66	0	DEN	63	50.3	24.7	0.0	0.0	0.0	80.6	0.4	-5.7	0.0	0.0	4.8	0.0	0.0	-5.0
362	425584.45	5409336.16	338.66	0	DEN	125	57.2	24.7	0.0	0.0	0.0	80.6	1.2	2.3	0.0	0.0	2.5	0.0	0.0	-4.7
362	425584.45	5409336.16	338.66	0	DEN	250	58.0	24.7	0.0	0.0	0.0	80.6	3.2	-0.2	0.0	0.0	4.8	0.0	0.0	-5.6
362	425584.45	5409336.16	338.66	0	DEN	500	61.4	24.7	0.0	0.0	0.0	80.6	5.8	-1.6	0.0	0.0	4.8	0.0	0.0	-3.5
362	425584.45	5409336.16	338.66	0	DEN	1000	60.8	24.7	0.0	0.0	0.0	80.6	11.1	-1.6	0.0	0.0	4.8	0.0	0.0	-9.3
362	425584.45	5409336.16	338.66	0	DEN	2000	58.6	24.7	0.0	0.0	0.0	80.6	29.3	-1.6	0.0	0.0	4.8	0.0	0.0	-29.7
362	425584.45	5409336.16	338.66	0	DEN	4000	53.7	24.7	0.0	0.0	0.0	80.6	99.2	-1.6	0.0	0.0	4.8	0.0	0.0	-104.6
362	425584.45	5409336.16	338.66	0	DEN	8000	44.8	24.7	0.0	0.0	0.0	80.6	353.8	-1.6	0.0	0.0	4.8	0.0	0.0	-368.2
364	424344.42	5410176.96	360.56	0	DEN	32	32.4	27.6	0.0	0.0	0.0	84.0	0.1	-5.8	0.0	0.0	0.0	0.0	0.0	-18.3
364	424344.42	5410176.96	360.56	0	DEN	63	50.3	27.6	0.0	0.0	0.0	84.0	0.5	-5.8	0.0	0.0	0.0	0.0	0.0	-0.8
364	424344.42	5410176.96	360.56	0	DEN	125	57.2	27.6	0.0	0.0	0.0	84.0	1.8	1.7	0.0	0.0	0.0	0.0	0.0	-2.6
364	424344.42	5410176.96	360.56	0	DEN	250	58.0	27.6	0.0	0.0	0.0	84.0	4.7	-0.8	0.0	0.0	0.0	0.0	0.0	-2.2
364	424344.42	5410176.96	360.56	0	DEN	500	61.4	27.6	0.0	0.0	0.0	84.0	8.6	-2.2	0.0	0.0	0.0	0.0	0.0	-1.4
364	424344.42	5410176.96	360.56	0	DEN	1000	60.8	27.6	0.0	0.0	0.0	84.0	16.4	-2.2	0.0	0.0	0.0	0.0	0.0	-9.7
364	424344.42	5410176.96	360.56	0	DEN	2000	58.6	27.6	0.0	0.0	0.0	84.0	43.3	-2.2	0.0	0.0	0.0	0.0	0.0	-38.8
364	424344.42	5410176.96	360.56	0	DEN	4000	53.7	27.6	0.0	0.0	0.0	84.0	146.7	-2.2	0.0	0.0	0.0	0.0	0.0	-147.2
364	424344.42	5410176.96	360.56	0	DEN	8000	44.8	27.6	0.0	0.0	0.0	84.0	523.3	-2.2	0.0	0.0	0.0	0.0	0.0	-532.7
392	425299.74	5409343.89	349.02	0	DEN	32	32.4	24.5	0.0	0.0	0.0	81.1	0.1	-5.8	0.0	0.0	4.8	0.0	0.0	-23.4
392	425299.74	5409343.89	349.02	0	DEN	63	50.3	24.5	0.0	0.0	0.0	81.1	0.4	-5.8	0.0	0.0	4.8	0.0	0.0	-5.7
392	425299.74	5409343.89	349.02	0	DEN	125	57.2	24.5	0.0	0.0	0.0	81.1	1.3	4.7	0.0	0.0	0.1	0.0	0.0	-5.5
392	425299.74	5409343.89	349.02	0	DEN	250	58.0	24.5	0.0	0.0	0.0	81.1	3.4	1.4	0.0	0.0	3.4	0.0	0.0	-6.8
392	425299.74	5409343.89	349.02	0	DEN	500	61.4	24.5	0.0	0.0	0.0	81.1	6.2	-0.9	0.0	0.0	4.8	0.0	0.0	-5.4
392	425299.74	5409343.89	349.02	0	DEN	1000	60.8	24.5	0.0	0.0	0.0	81.1	11.8	-0.9	0.0	0.0	4.8	0.0	0.0	-11.5
392	425299.74	5409343.89	349.02	0	DEN	2000	58.6	24.5	0.0	0.0	0.0	81.1	31.1	-0.9	0.0	0.0	4.8	0.0	0.0	-33.0
392	425299.74	5409343.89	349.02	0	DEN	4000	53.7	24.5	0.0	0.0	0.0	81.1	105.4	-0.9	0.0	0.0	4.8	0.0	0.0	-112.3
392	425299.74	5409343.89	349.02	0	DEN	8000	44.8	24.5	0.0	0.0	0.0	81.1	375.9	-0.9	0.0	0.0	4.8	0.0	0.0	-391.7
402	425705.23	5409422.07	317.83	0	DEN	32	32.4	23.6	0.0	0.0	0.0	80.6	0.1	-5.7	0.0	0.0	4.8	0.0	0.0	-23.7
402	425705.23	5409422.07	317.83	0	DEN	63	50.3	23.6	0.0	0.0	0.0	80.6	0.4	-5.7	0.0	0.0	4.8	0.0	0.0	-6.1
402	425705.23	5409422.07	317.83	0	DEN	125	57.2	23.6	0.0	0.0	0.0	80.6	1.2	2.2	0.0	0.0	2.6	0.0	0.0	-5.8
402	425705.23	5409422.07	317.83	0	DEN	250	58.0	23.6	0.0	0.0	0.0	80.6	3.2	-0.3	0.0	0.0	4.9	0.0	0.0	-6.7
402	425705.23	5409422.07	317.83	0	DEN	500	61.4	23.6	0.0	0.0	0.0	80.6	5.8	-1.6	0.0	0.0	4.9	0.0	0.0	-4.7

Line Source, ISO 9613, Name: "TRE_OP-TMA", ID: ""																					
Nr.	X	Y	Z	Refl.	DEN	Freq.	Lw	l/a	Optime	K0	Dc	Adiv	Aatm	Agr	Afol	Ahous	Abar	Cmet	RL	Lr
	(m)	(m)	(m)			(Hz)	dB(A)	dB	dB	(dB)	(dB)	(dB)	(dB)	(dB)	(dB)	(dB)	(dB)	(dB)	(dB)	dB(A)
402	425705.23	5409422.07	317.83	0	DEN	1000	60.8	23.6	0.0	0.0	0.0	80.6	11.1	-1.6	0.0	0.0	5.1	0.0	0.0	-10.7
402	425705.23	5409422.07	317.83	0	DEN	2000	58.6	23.6	0.0	0.0	0.0	80.6	29.2	-1.6	0.0	0.0	5.4	0.0	0.0	-31.4
402	425705.23	5409422.07	317.83	0	DEN	4000	53.7	23.6	0.0	0.0	0.0	80.6	99.1	-1.6	0.0	0.0	5.9	0.0	0.0	-106.7
402	425705.23	5409422.07	317.83	0	DEN	8000	44.8	23.6	0.0	0.0	0.0	80.6	353.5	-1.6	0.0	0.0	6.8	0.0	0.0	-370.9
427	425499.98	5409457.87	299.87	0	DEN	32	32.4	22.8	0.0	0.0	0.0	81.0	0.1	-5.8	0.0	0.0	5.2	0.0	0.0	-25.3
427	425499.98	5409457.87	299.87	0	DEN	63	50.3	22.8	0.0	0.0	0.0	81.0	0.4	-5.8	0.0	0.0	5.5	0.0	0.0	-8.0
427	425499.98	5409457.87	299.87	0	DEN	125	57.2	22.8	0.0	0.0	0.0	81.0	1.3	2.2	0.0	0.0	4.0	0.0	0.0	-8.5
427	425499.98	5409457.87	299.87	0	DEN	250	58.0	22.8	0.0	0.0	0.0	81.0	3.3	-0.3	0.0	0.0	7.2	0.0	0.0	-10.4
427	425499.98	5409457.87	299.87	0	DEN	500	61.4	22.8	0.0	0.0	0.0	81.0	6.1	-1.7	0.0	0.0	8.8	0.0	0.0	-10.0
427	425499.98	5409457.87	299.87	0	DEN	1000	60.8	22.8	0.0	0.0	0.0	81.0	11.6	-1.7	0.0	0.0	10.8	0.0	0.0	-18.1
427	425499.98	5409457.87	299.87	0	DEN	2000	58.6	22.8	0.0	0.0	0.0	81.0	30.7	-1.7	0.0	0.0	13.3	0.0	0.0	-41.8
427	425499.98	5409457.87	299.87	0	DEN	4000	53.7	22.8	0.0	0.0	0.0	81.0	104.1	-1.7	0.0	0.0	16.0	0.0	0.0	-122.8
427	425499.98	5409457.87	299.87	0	DEN	8000	44.8	22.8	0.0	0.0	0.0	81.0	371.2	-1.7	0.0	0.0	18.8	0.0	0.0	-401.7
428	424642.58	5409858.65	354.60	0	DEN	32	32.4	24.8	0.0	0.0	0.0	83.1	0.1	-5.8	0.0	0.0	4.8	0.0	0.0	-25.0
428	424642.58	5409858.65	354.60	0	DEN	63	50.3	24.8	0.0	0.0	0.0	83.1	0.5	-5.8	0.0	0.0	4.8	0.0	0.0	-7.5
428	424642.58	5409858.65	354.60	0	DEN	125	57.2	24.8	0.0	0.0	0.0	83.1	1.7	2.0	0.0	0.0	2.7	0.0	0.0	-7.6
428	424642.58	5409858.65	354.60	0	DEN	250	58.0	24.8	0.0	0.0	0.0	83.1	4.2	-0.5	0.0	0.0	4.8	0.0	0.0	-8.9
428	424642.58	5409858.65	354.60	0	DEN	500	61.4	24.8	0.0	0.0	0.0	83.1	7.8	-1.9	0.0	0.0	4.8	0.0	0.0	-7.6
428	424642.58	5409858.65	354.60	0	DEN	1000	60.8	24.8	0.0	0.0	0.0	83.1	14.8	-1.9	0.0	0.0	4.8	0.0	0.0	-15.2
428	424642.58	5409858.65	354.60	0	DEN	2000	58.6	24.8	0.0	0.0	0.0	83.1	39.1	-1.9	0.0	0.0	4.8	0.0	0.0	-41.6
428	424642.58	5409858.65	354.60	0	DEN	4000	53.7	24.8	0.0	0.0	0.0	83.1	132.4	-1.9	0.0	0.0	4.8	0.0	0.0	-139.9
428	424642.58	5409858.65	354.60	0	DEN	8000	44.8	24.8	0.0	0.0	0.0	83.1	472.3	-1.9	0.0	0.0	4.8	0.0	0.0	-488.7
478	425100.99	5409404.00	349.02	0	DEN	32	32.4	21.5	0.0	0.0	0.0	81.6	0.1	-5.8	0.0	0.0	4.8	0.0	0.0	-26.7
478	425100.99	5409404.00	349.02	0	DEN	63	50.3	21.5	0.0	0.0	0.0	81.6	0.4	-5.8	0.0	0.0	4.8	0.0	0.0	-9.1
478	425100.99	5409404.00	349.02	0	DEN	125	57.2	21.5	0.0	0.0	0.0	81.6	1.4	3.0	0.0	0.0	1.8	0.0	0.0	-9.0
478	425100.99	5409404.00	349.02	0	DEN	250	58.0	21.5	0.0	0.0	0.0	81.6	3.5	0.3	0.0	0.0	4.4	0.0	0.0	-10.3
478	425100.99	5409404.00	349.02	0	DEN	500	61.4	21.5	0.0	0.0	0.0	81.6	6.5	-1.3	0.0	0.0	4.8	0.0	0.0	-8.6
478	425100.99	5409404.00	349.02	0	DEN	1000	60.8	21.5	0.0	0.0	0.0	81.6	12.4	-1.3	0.0	0.0	4.8	0.0	0.0	-15.1
478	425100.99	5409404.00	349.02	0	DEN	2000	58.6	21.5	0.0	0.0	0.0	81.6	32.8	-1.3	0.0	0.0	4.8	0.0	0.0	-37.7
478	425100.99	5409404.00	349.02	0	DEN	4000	53.7	21.5	0.0	0.0	0.0	81.6	111.3	-1.3	0.0	0.0	4.8	0.0	0.0	-121.1
478	425100.99	5409404.00	349.02	0	DEN	8000	44.8	21.5	0.0	0.0	0.0	81.6	396.9	-1.3	0.0	0.0	4.8	0.0	0.0	-415.6
486	425776.63	5409373.74	328.24	0	DEN	32	32.4	20.0	0.0	0.0	0.0	80.4	0.1	-5.7	0.0	0.0	4.8	0.0	0.0	-27.0
486	425776.63	5409373.74	328.24	0	DEN	63	50.3	20.0	0.0	0.0	0.0	80.4	0.4	-5.7	0.0	0.0	4.8	0.0	0.0	-9.4
486	425776.63	5409373.74	328.24	0	DEN	125	57.2	20.0	0.0	0.0	0.0	80.4	1.2	2.3	0.0	0.0	2.5	0.0	0.0	-9.1
486	425776.63	5409373.74	328.24	0	DEN	250	58.0	20.0	0.0	0.0	0.0	80.4	3.1	-0.2	0.0	0.0	4.8	0.0	0.0	-10.1
486	425776.63	5409373.74	328.24	0	DEN	500	61.4	20.0	0.0	0.0	0.0	80.4	5.7	-1.6	0.0	0.0	4.9	0.0	0.0	-7.9
486	425776.63	5409373.74	328.24	0	DEN	1000	60.8	20.0	0.0	0.0	0.0	80.4	10.8	-1.6	0.0	0.0	5.1	0.0	0.0	-13.8
486	425776.63	5409373.74	328.24	0	DEN	2000	58.6	20.0	0.0	0.0	0.0	80.4	28.4	-1.6	0.0	0.0	5.3	0.0	0.0	-33.9
486	425776.63	5409373.74	328.24	0	DEN	4000	53.7	20.0	0.0	0.0	0.0	80.4	96.5	-1.6	0.0	0.0	5.8	0.0	0.0	-107.3
486	425776.63	5409373.74	328.24	0	DEN	8000	44.8	20.0	0.0	0.0	0.0	80.4	344.1	-1.6	0.0	0.0	6.7	0.0	0.0	-364.7
488	423876.07	5410922.04	364.00	0	DEN	32	32.4	24.9	0.0	0.0	0.0	85.6	0.2	-5.9	0.0	0.0	0.0	0.0	0.0	-22.5
488	423876.07	5410922.04	364.00	0	DEN	63	50.3	24.9	0.0	0.0	0.0	85.6	0.7	-5.9	0.0	0.0	0.0	0.0	0.0	-5.1
488	423876.07	5410922.04	364.00	0	DEN	125	57.2	24.9	0.0	0.0	0.0	85.6	2.2	1.2	0.0	0.0	0.0	0.0	0.0	-6.7
488	423876.07	5410922.04	364.00	0	DEN	250	58.0	24.9	0.0	0.0	0.0	85.6	5.6	-1.3	0.0	0.0	0.0	0.0	0.0	-6.9
488	423876.07	5410922.04	364.00	0	DEN	500	61.4	24.9	0.0	0.0	0.0	85.6	10.3	-2.7	0.0	0.0	0.0	0.0	0.0	-6.8
488	423876.07	5410922.04	364.00	0	DEN	1000	60.8	24.9	0.0	0.0	0.0	85.6	19.5	-2.7	0.0	0.0	0.0	0.0	0.0	-16.7
488	423876.07	5410922.04	364.00	0	DEN	2000	58.6	24.9	0.0	0.0	0.0	85.6	51.6	-2.7	0.0	0.0	0.0	0.0	0.0	-50.9
488	423876.07	5410922.04	364.00	0	DEN	4000	53.7	24.9	0.0	0.0	0.0	85.6	175.0	-2.7	0.0	0.0	0.0	0.0	0.0	-179.3
488	423876.07	5410922.04	364.00	0	DEN	8000	44.8	24.9	0.0	0.0	0.0	85.6	624.4	-2.7	0.0	0.0	0.0	0.0	0.0	-637.5
495	424083.09	5410477.06	364.00	0	DEN	32	32.4	23.6	0.0	0.0	0.0	84.8	0.2	-5.8	0.0	0.0	0.0	0.0	0.0	-23.0
495	424083.09	5410477.06	364.00	0	DEN	63	50.3	23.6	0.0	0.0	0.0	84.8	0.6	-5.8	0.0	0.0	0.0	0.0	0.0	-5.5
495	424083.09	5410477.06	364.00	0	DEN	125	57.2	23.6	0.0	0.0	0.0	84.8	2.0	1.4	0.0	0.0	0.0	0.0	0.0	-7.3
495	424083.09	5410477.06	364.00	0	DEN	250	58.0	23.6	0.0	0.0	0.0	84.8	5.1	-1.0	0.0	0.0	0.0	0.0	0.0	-7.1
495	424083.09	5410477.06	364.00	0	DEN	500	61.4	23.6	0.0	0.0	0.0	84.8	9.4	-2.4	0.0	0.0	0.0	0.0	0.0	-6.7
495	424083.09	5410477.06	364.00	0	DEN	1000	60.8	23.6	0.0	0.0	0.0	84.8	17.8	-2.4	0.0	0.0	0.0	0.0	0.0	-15.7
495	424083.09	5410477.06	364.00	0	DEN	2000	58.6	23.6	0.0	0.0	0.0	84.8	47.1	-2.4	0.0	0.0	0.0	0.0	0.0	-47.2
495	424083.09	5410477.06	364.00	0	DEN	4000	53.7	23.6	0.0	0.0	0.0	84.8	159.7	-2.4	0.0	0.0	0.0	0.0	0.0	-164.7
495	424083.09	5410477.06	364.00	0	DEN	8000	44.8	23.6	0.0	0.0	0.0	84.8	569.8	-2.4	0.0	0.0	0.0	0.0	0.0	-583.6
501	423987.97	5410681.39	364.00	0	DEN	32	32.4	23.4	0.0	0.0	0.0	85.1	0.2	-5.8	0.0	0.0	0.0	0.0	0.0	-23.6
501	423987.97	5410681.39	364.00	0	DEN	63	50.3	23.4	0.0	0.0	0.0	85.1	0.6	-5.8	0.0	0.0	0.0	0.0	0.0	-6.1
501	423987.97	5410681.39	364.00	0	DEN	125	57.2	23.4	0.0	0.0	0.0	85.1	2.1	1.3	0.0	0.0	0.0	0.0	0.0	-7.9
501	423987.97	5410681.39	364.00	0	DEN	250	58.0	23.4	0.0	0.0	0.0	85.1	5.3	-1.1	0.0	0.0	0.0	0.0	0.0	-7.8
501	423987.97	5410681.39	364.00	0	DEN	500	61.4	23.4	0.0	0.0	0.0	85.1	9.8	-2.5	0.0	0.0	0.0	0.0	0.0	-7.6

Line Source, ISO 9613, Name: "TRE_OP-TMA", ID: ""																					
Nr.	X	Y	Z	Refl.	DEN	Freq.	Lw	l/a	Optime	K0	Dc	Adiv	Aatm	Agr	Afol	Ahous	Abar	Cmet	RL	Lr
	(m)	(m)	(m)			(Hz)	dB(A)	dB	dB	(dB)	(dB)	(dB)	(dB)	(dB)	(dB)	(dB)	(dB)	(dB)	(dB)	dB(A)
501	423987.97	5410681.39	364.00	0	DEN	1000	60.8	23.4	0.0	0.0	0.0	85.1	18.6	-2.5	0.0	0.0	0.0	0.0	0.0	-17.0
501	423987.97	5410681.39	364.00	0	DEN	2000	58.6	23.4	0.0	0.0	0.0	85.1	49.2	-2.5	0.0	0.0	0.0	0.0	0.0	-49.7
501	423987.97	5410681.39	364.00	0	DEN	4000	53.7	23.4	0.0	0.0	0.0	85.1	166.8	-2.5	0.0	0.0	0.0	0.0	0.0	-172.2
501	423987.97	5410681.39	364.00	0	DEN	8000	44.8	23.4	0.0	0.0	0.0	85.1	594.8	-2.5	0.0	0.0	0.0	0.0	0.0	-609.1
506	423764.42	5411184.91	364.00	0	DEN	32	32.4	24.1	0.0	0.0	0.0	86.0	0.2	-5.9	0.0	0.0	0.0	0.0	0.0	-23.7
506	423764.42	5411184.91	364.00	0	DEN	63	50.3	24.1	0.0	0.0	0.0	86.0	0.7	-5.9	0.0	0.0	0.0	0.0	0.0	-6.3
506	423764.42	5411184.91	364.00	0	DEN	125	57.2	24.1	0.0	0.0	0.0	86.0	2.3	1.1	0.0	0.0	0.0	0.0	0.0	-8.0
506	423764.42	5411184.91	364.00	0	DEN	250	58.0	24.1	0.0	0.0	0.0	86.0	5.9	-1.4	0.0	0.0	0.0	0.0	0.0	-8.3
506	423764.42	5411184.91	364.00	0	DEN	500	61.4	24.1	0.0	0.0	0.0	86.0	10.8	-2.8	0.0	0.0	0.0	0.0	0.0	-8.4
506	423764.42	5411184.91	364.00	0	DEN	1000	60.8	24.1	0.0	0.0	0.0	86.0	20.5	-2.8	0.0	0.0	0.0	0.0	0.0	-18.7
506	423764.42	5411184.91	364.00	0	DEN	2000	58.6	24.1	0.0	0.0	0.0	86.0	54.2	-2.8	0.0	0.0	0.0	0.0	0.0	-54.7
506	423764.42	5411184.91	364.00	0	DEN	4000	53.7	24.1	0.0	0.0	0.0	86.0	183.9	-2.8	0.0	0.0	0.0	0.0	0.0	-189.2
506	423764.42	5411184.91	364.00	0	DEN	8000	44.8	24.1	0.0	0.0	0.0	86.0	656.0	-2.8	0.0	0.0	0.0	0.0	0.0	-670.2
507	423671.30	5411434.40	364.00	0	DEN	32	32.4	24.4	0.0	0.0	0.0	86.4	0.2	-5.9	0.0	0.0	0.0	0.0	0.0	-23.9
507	423671.30	5411434.40	364.00	0	DEN	63	50.3	24.4	0.0	0.0	0.0	86.4	0.7	-5.9	0.0	0.0	0.0	0.0	0.0	-6.5
507	423671.30	5411434.40	364.00	0	DEN	125	57.2	24.4	0.0	0.0	0.0	86.4	2.4	0.9	0.0	0.0	0.0	0.0	0.0	-8.1
507	423671.30	5411434.40	364.00	0	DEN	250	58.0	24.4	0.0	0.0	0.0	86.4	6.1	-1.5	0.0	0.0	0.0	0.0	0.0	-8.6
507	423671.30	5411434.40	364.00	0	DEN	500	61.4	24.4	0.0	0.0	0.0	86.4	11.3	-2.9	0.0	0.0	0.0	0.0	0.0	-9.0
507	423671.30	5411434.40	364.00	0	DEN	1000	60.8	24.4	0.0	0.0	0.0	86.4	21.4	-2.9	0.0	0.0	0.0	0.0	0.0	-19.7
507	423671.30	5411434.40	364.00	0	DEN	2000	58.6	24.4	0.0	0.0	0.0	86.4	56.7	-2.9	0.0	0.0	0.0	0.0	0.0	-57.1
507	423671.30	5411434.40	364.00	0	DEN	4000	53.7	24.4	0.0	0.0	0.0	86.4	192.1	-2.9	0.0	0.0	0.0	0.0	0.0	-197.5
507	423671.30	5411434.40	364.00	0	DEN	8000	44.8	24.4	0.0	0.0	0.0	86.4	685.2	-2.9	0.0	0.0	0.0	0.0	0.0	-699.5
544	423581.42	5411560.00	364.00	0	DEN	32	32.4	19.6	0.0	0.0	0.0	86.6	0.2	-5.9	0.0	0.0	0.0	0.0	0.0	-28.9
544	423581.42	5411560.00	364.00	0	DEN	63	50.3	19.6	0.0	0.0	0.0	86.6	0.7	-5.9	0.0	0.0	0.0	0.0	0.0	-11.5
544	423581.42	5411560.00	364.00	0	DEN	125	57.2	19.6	0.0	0.0	0.0	86.6	2.5	0.9	0.0	0.0	0.0	0.0	0.0	-13.1
544	423581.42	5411560.00	364.00	0	DEN	250	58.0	19.6	0.0	0.0	0.0	86.6	6.3	-1.6	0.0	0.0	0.0	0.0	0.0	-13.7
544	423581.42	5411560.00	364.00	0	DEN	500	61.4	19.6	0.0	0.0	0.0	86.6	11.6	-3.0	0.0	0.0	0.0	0.0	0.0	-14.2
544	423581.42	5411560.00	364.00	0	DEN	1000	60.8	19.6	0.0	0.0	0.0	86.6	22.0	-3.0	0.0	0.0	0.0	0.0	0.0	-25.2
544	423581.42	5411560.00	364.00	0	DEN	2000	58.6	19.6	0.0	0.0	0.0	86.6	58.1	-3.0	0.0	0.0	0.0	0.0	0.0	-63.6
544	423581.42	5411560.00	364.00	0	DEN	4000	53.7	19.6	0.0	0.0	0.0	86.6	197.2	-3.0	0.0	0.0	0.0	0.0	0.0	-207.5
544	423581.42	5411560.00	364.00	0	DEN	8000	44.8	19.6	0.0	0.0	0.0	86.6	703.2	-3.0	0.0	0.0	0.0	0.0	0.0	-722.4
551	425819.99	5409402.62	327.35	0	DEN	32	32.4	11.4	0.0	0.0	0.0	80.4	0.1	-5.7	0.0	0.0	4.8	0.0	0.0	-35.6
551	425819.99	5409402.62	327.35	0	DEN	63	50.3	11.4	0.0	0.0	0.0	80.4	0.4	-5.7	0.0	0.0	4.8	0.0	0.0	-18.0
551	425819.99	5409402.62	327.35	0	DEN	125	57.2	11.4	0.0	0.0	0.0	80.4	1.2	2.2	0.0	0.0	2.6	0.0	0.0	-17.7
551	425819.99	5409402.62	327.35	0	DEN	250	58.0	11.4	0.0	0.0	0.0	80.4	3.1	-0.2	0.0	0.0	4.8	0.0	0.0	-18.5
551	425819.99	5409402.62	327.35	0	DEN	500	61.4	11.4	0.0	0.0	0.0	80.4	5.7	-1.6	0.0	0.0	4.8	0.0	0.0	-16.3
551	425819.99	5409402.62	327.35	0	DEN	1000	60.8	11.4	0.0	0.0	0.0	80.4	10.8	-1.6	0.0	0.0	4.8	0.0	0.0	-22.0
551	425819.99	5409402.62	327.35	0	DEN	2000	58.6	11.4	0.0	0.0	0.0	80.4	28.4	-1.6	0.0	0.0	4.8	0.0	0.0	-42.0
551	425819.99	5409402.62	327.35	0	DEN	4000	53.7	11.4	0.0	0.0	0.0	80.4	96.5	-1.6	0.0	0.0	4.9	0.0	0.0	-114.9
551	425819.99	5409402.62	327.35	0	DEN	8000	44.8	11.4	0.0	0.0	0.0	80.4	344.0	-1.6	0.0	0.0	5.0	0.0	0.0	-371.5

Line Source, ISO 9613, Name: "TRE_TMA1", ID: ""																					
Nr.	X	Y	Z	Refl.	DEN	Freq.	Lw	l/a	Optime	K0	Dc	Adiv	Aatm	Agr	Afol	Ahous	Abar	Cmet	RL	Lr
	(m)	(m)	(m)			(Hz)	dB(A)	dB	dB	(dB)	(dB)	(dB)	(dB)	(dB)	(dB)	(dB)	(dB)	(dB)	(dB)	dB(A)
523	423371.94	5411803.76	365.71	0	D	32	25.2	26.6	0.0	0.0	0.0	87.0	0.2	-5.9	0.0	0.0	0.0	0.0	0.0	-29.5
523	423371.94	5411803.76	365.71	0	D	63	50.7	26.6	0.0	0.0	0.0	87.0	0.8	-5.9	0.0	0.0	0.0	0.0	0.0	-4.6
523	423371.94	5411803.76	365.71	0	D	125	57.1	26.6	0.0	0.0	0.0	87.0	2.6	0.8	0.0	0.0	0.0	0.0	0.0	-6.7
523	423371.94	5411803.76	365.71	0	D	250	64.0	26.6	0.0	0.0	0.0	87.0	6.6	-1.6	0.0	0.0	0.0	0.0	0.0	-1.3
523	423371.94	5411803.76	365.71	0	D	500	61.9	26.6	0.0	0.0	0.0	87.0	12.2	-3.0	0.0	0.0	0.0	0.0	0.0	-7.7
523	423371.94	5411803.76	365.71	0	D	1000	63.0	26.6	0.0	0.0	0.0	87.0	23.2	-3.0	0.0	0.0	0.0	0.0	0.0	-17.5
523	423371.94	5411803.76	365.71	0	D	2000	60.1	26.6	0.0	0.0	0.0	87.0	61.2	-3.0	0.0	0.0	0.0	0.0	0.0	-58.5
523	423371.94	5411803.76	365.71	0	D	4000	55.1	26.6	0.0	0.0	0.0	87.0	207.7	-3.0	0.0	0.0	0.0	0.0	0.0	-209.9
523	423371.94	5411803.76	365.71	0	D	8000	46.0	26.6	0.0	0.0	0.0	87.0	740.8	-3.0	0.0	0.0	0.0	0.0	0.0	-752.1
523	423371.94	5411803.76	365.71	0	N	32	25.2	26.6	-188.0	0.0	0.0	87.0	0.2	-5.9	0.0	0.0	0.0	0.0	0.0	-217.5
523	423371.94	5411803.76	365.71	0	N	63	50.7	26.6	-188.0	0.0	0.0	87.0	0.8	-5.9	0.0	0.0	0.0	0.0	0.0	-192.6
523	423371.94	5411803.76	365.71	0	N	125	57.1	26.6	-188.0	0.0	0.0	87.0	2.6	0.8	0.0	0.0	0.0	0.0	0.0	-194.7
523	423371.94	5411803.76	365.71	0	N	250	64.0	26.6	-188.0	0.0	0.0	87.0	6.6	-1.6	0.0	0.0	0.0	0.0	0.0	-189.3
523	423371.94	5411803.76	365.71	0	N	500	61.9	26.6	-188.0	0.0	0.0	87.0	12.2	-3.0	0.0	0.0	0.0	0.0	0.0	-195.7
523	423371.94	5411803.76	365.71	0	N	1000	63.0	26.6	-188.0	0.0	0.0	87.0	23.2	-3.0	0.0	0.0	0.0	0.0	0.0	-205.5
523	423371.94	5411803.76	365.71	0	N	2000	60.1	26.6	-188.0	0.0	0.0	87.0	61.2	-3.0	0.0	0.0	0.0	0.0	0.0	-246.5
523	423371.94	5411803.76	365.71	0	N	4000	55.1	26.6	-188.0	0.0	0.0	87.0	207.7	-3.0	0.0	0.0	0.0	0.0	0.0	-397.9
523	423371.94	5411803.76	365.71	0	N	8000	46.0	26.6	-188.0	0.0	0.0	87.0	740.8	-3.0	0.0	0.0	0.0	0.0	0.0	-940.1
523	423371.94	5411803.76	365.71	0	E	32	25.2	26.6	-188.0	0.0	0.0	87.0	0.2	-5.9	0.0	0.0	0.0	0.0	0.0	-217.5

Line Source, ISO 9613, Name: "TRE_TMA1", ID: ""																				
Nr.	X	Y	Z	Refl.	DEN	Freq.	Lw	l/a	Optime	K0	Dc	Adiv	Aatm	Agr	Afol	Ahous	Abar	Cmet	RL	Lr
	(m)	(m)	(m)			(Hz)	dB(A)	dB	dB	(dB)	(dB)	(dB)	(dB)	(dB)	(dB)	(dB)	(dB)	(dB)	(dB)	dB(A)
523	423371.94	5411803.76	365.71	0	E	63	50.7	26.6	-188.0	0.0	0.0	87.0	0.8	-5.9	0.0	0.0	0.0	0.0	0.0	-192.6
523	423371.94	5411803.76	365.71	0	E	125	57.1	26.6	-188.0	0.0	0.0	87.0	2.6	0.8	0.0	0.0	0.0	0.0	0.0	-194.7
523	423371.94	5411803.76	365.71	0	E	250	64.0	26.6	-188.0	0.0	0.0	87.0	6.6	-1.6	0.0	0.0	0.0	0.0	0.0	-189.3
523	423371.94	5411803.76	365.71	0	E	500	61.9	26.6	-188.0	0.0	0.0	87.0	12.2	-3.0	0.0	0.0	0.0	0.0	0.0	-195.7
523	423371.94	5411803.76	365.71	0	E	1000	63.0	26.6	-188.0	0.0	0.0	87.0	23.2	-3.0	0.0	0.0	0.0	0.0	0.0	-205.5
523	423371.94	5411803.76	365.71	0	E	2000	60.1	26.6	-188.0	0.0	0.0	87.0	61.2	-3.0	0.0	0.0	0.0	0.0	0.0	-246.5
523	423371.94	5411803.76	365.71	0	E	4000	55.1	26.6	-188.0	0.0	0.0	87.0	207.7	-3.0	0.0	0.0	0.0	0.0	0.0	-397.9
523	423371.94	5411803.76	365.71	0	E	8000	46.0	26.6	-188.0	0.0	0.0	87.0	740.8	-3.0	0.0	0.0	0.0	0.0	0.0	-940.1
534	422963.35	5411839.19	365.32	0	D	32	25.2	25.6	0.0	0.0	0.0	87.4	0.2	-5.9	0.0	0.0	0.0	0.0	0.0	-30.9
534	422963.35	5411839.19	365.32	0	D	63	50.7	25.6	0.0	0.0	0.0	87.4	0.8	-5.9	0.0	0.0	0.0	0.0	0.0	-6.0
534	422963.35	5411839.19	365.32	0	D	125	57.1	25.6	0.0	0.0	0.0	87.4	2.7	1.1	0.0	0.0	0.0	0.0	0.0	-8.5
534	422963.35	5411839.19	365.32	0	D	250	64.0	25.6	0.0	0.0	0.0	87.4	6.9	-1.4	0.0	0.0	0.0	0.0	0.0	-3.4
534	422963.35	5411839.19	365.32	0	D	500	61.9	25.6	0.0	0.0	0.0	87.4	12.8	-2.7	0.0	0.0	0.0	0.0	0.0	-9.9
534	422963.35	5411839.19	365.32	0	D	1000	63.0	25.6	0.0	0.0	0.0	87.4	24.3	-2.8	0.0	0.0	0.0	0.0	0.0	-20.3
534	422963.35	5411839.19	365.32	0	D	2000	60.1	25.6	0.0	0.0	0.0	87.4	64.1	-2.8	0.0	0.0	0.0	0.0	0.0	-63.1
534	422963.35	5411839.19	365.32	0	D	4000	55.1	25.6	0.0	0.0	0.0	87.4	217.4	-2.8	0.0	0.0	0.0	0.0	0.0	-221.4
534	422963.35	5411839.19	365.32	0	D	8000	46.0	25.6	0.0	0.0	0.0	87.4	775.4	-2.8	0.0	0.0	0.0	0.0	0.0	-788.5
534	422963.35	5411839.19	365.32	0	N	32	25.2	25.6	-188.0	0.0	0.0	87.4	0.2	-5.9	0.0	0.0	0.0	0.0	0.0	-218.9
534	422963.35	5411839.19	365.32	0	N	63	50.7	25.6	-188.0	0.0	0.0	87.4	0.8	-5.9	0.0	0.0	0.0	0.0	0.0	-194.0
534	422963.35	5411839.19	365.32	0	N	125	57.1	25.6	-188.0	0.0	0.0	87.4	2.7	1.1	0.0	0.0	0.0	0.0	0.0	-196.5
534	422963.35	5411839.19	365.32	0	N	250	64.0	25.6	-188.0	0.0	0.0	87.4	6.9	-1.4	0.0	0.0	0.0	0.0	0.0	-191.4
534	422963.35	5411839.19	365.32	0	N	500	61.9	25.6	-188.0	0.0	0.0	87.4	12.8	-2.7	0.0	0.0	0.0	0.0	0.0	-197.9
534	422963.35	5411839.19	365.32	0	N	1000	63.0	25.6	-188.0	0.0	0.0	87.4	24.3	-2.8	0.0	0.0	0.0	0.0	0.0	-208.3
534	422963.35	5411839.19	365.32	0	N	2000	60.1	25.6	-188.0	0.0	0.0	87.4	64.1	-2.8	0.0	0.0	0.0	0.0	0.0	-251.1
534	422963.35	5411839.19	365.32	0	N	4000	55.1	25.6	-188.0	0.0	0.0	87.4	217.4	-2.8	0.0	0.0	0.0	0.0	0.0	-409.4
534	422963.35	5411839.19	365.32	0	N	8000	46.0	25.6	-188.0	0.0	0.0	87.4	775.4	-2.8	0.0	0.0	0.0	0.0	0.0	-976.5
534	422963.35	5411839.19	365.32	0	E	32	25.2	25.6	-188.0	0.0	0.0	87.4	0.2	-5.9	0.0	0.0	0.0	0.0	0.0	-218.9
534	422963.35	5411839.19	365.32	0	E	63	50.7	25.6	-188.0	0.0	0.0	87.4	0.8	-5.9	0.0	0.0	0.0	0.0	0.0	-194.0
534	422963.35	5411839.19	365.32	0	E	125	57.1	25.6	-188.0	0.0	0.0	87.4	2.7	1.1	0.0	0.0	0.0	0.0	0.0	-196.5
534	422963.35	5411839.19	365.32	0	E	250	64.0	25.6	-188.0	0.0	0.0	87.4	6.9	-1.4	0.0	0.0	0.0	0.0	0.0	-191.4
534	422963.35	5411839.19	365.32	0	E	500	61.9	25.6	-188.0	0.0	0.0	87.4	12.8	-2.7	0.0	0.0	0.0	0.0	0.0	-197.9
534	422963.35	5411839.19	365.32	0	E	1000	63.0	25.6	-188.0	0.0	0.0	87.4	24.3	-2.8	0.0	0.0	0.0	0.0	0.0	-208.3
534	422963.35	5411839.19	365.32	0	E	2000	60.1	25.6	-188.0	0.0	0.0	87.4	64.1	-2.8	0.0	0.0	0.0	0.0	0.0	-251.1
534	422963.35	5411839.19	365.32	0	E	4000	55.1	25.6	-188.0	0.0	0.0	87.4	217.4	-2.8	0.0	0.0	0.0	0.0	0.0	-409.4
534	422963.35	5411839.19	365.32	0	E	8000	46.0	25.6	-188.0	0.0	0.0	87.4	775.4	-2.8	0.0	0.0	0.0	0.0	0.0	-976.5
537	422221.02	5411776.63	365.31	0	D	32	25.2	26.2	0.0	0.0	0.0	88.0	0.2	-5.9	0.0	0.0	0.0	0.0	0.0	-31.0
537	422221.02	5411776.63	365.31	0	D	63	50.7	26.2	0.0	0.0	0.0	88.0	0.9	-5.9	0.0	0.0	0.0	0.0	0.0	-6.1
537	422221.02	5411776.63	365.31	0	D	125	57.1	26.2	0.0	0.0	0.0	88.0	2.9	1.7	0.0	0.0	0.0	0.0	0.0	-9.4
537	422221.02	5411776.63	365.31	0	D	250	64.0	26.2	0.0	0.0	0.0	88.0	7.4	-0.7	0.0	0.0	0.0	0.0	0.0	-4.5
537	422221.02	5411776.63	365.31	0	D	500	61.9	26.2	0.0	0.0	0.0	88.0	13.7	-2.1	0.0	0.0	0.0	0.0	0.0	-11.5
537	422221.02	5411776.63	365.31	0	D	1000	63.0	26.2	0.0	0.0	0.0	88.0	26.0	-2.1	0.0	0.0	0.0	0.0	0.0	-22.7
537	422221.02	5411776.63	365.31	0	D	2000	60.1	26.2	0.0	0.0	0.0	88.0	68.8	-2.1	0.0	0.0	0.0	0.0	0.0	-68.3
537	422221.02	5411776.63	365.31	0	D	4000	55.1	26.2	0.0	0.0	0.0	88.0	233.2	-2.1	0.0	0.0	0.0	0.0	0.0	-237.7
537	422221.02	5411776.63	365.31	0	D	8000	46.0	26.2	0.0	0.0	0.0	88.0	831.6	-2.1	0.0	0.0	0.0	0.0	0.0	-845.3
537	422221.02	5411776.63	365.31	0	N	32	25.2	26.2	-188.0	0.0	0.0	88.0	0.2	-5.9	0.0	0.0	0.0	0.0	0.0	-219.0
537	422221.02	5411776.63	365.31	0	N	63	50.7	26.2	-188.0	0.0	0.0	88.0	0.9	-5.9	0.0	0.0	0.0	0.0	0.0	-194.1
537	422221.02	5411776.63	365.31	0	N	125	57.1	26.2	-188.0	0.0	0.0	88.0	2.9	1.7	0.0	0.0	0.0	0.0	0.0	-197.4
537	422221.02	5411776.63	365.31	0	N	250	64.0	26.2	-188.0	0.0	0.0	88.0	7.4	-0.7	0.0	0.0	0.0	0.0	0.0	-192.5
537	422221.02	5411776.63	365.31	0	N	500	61.9	26.2	-188.0	0.0	0.0	88.0	13.7	-2.1	0.0	0.0	0.0	0.0	0.0	-199.5
537	422221.02	5411776.63	365.31	0	N	1000	63.0	26.2	-188.0	0.0	0.0	88.0	26.0	-2.1	0.0	0.0	0.0	0.0	0.0	-210.7
537	422221.02	5411776.63	365.31	0	N	2000	60.1	26.2	-188.0	0.0	0.0	88.0	68.8	-2.1	0.0	0.0	0.0	0.0	0.0	-256.3
537	422221.02	5411776.63	365.31	0	N	4000	55.1	26.2	-188.0	0.0	0.0	88.0	233.2	-2.1	0.0	0.0	0.0	0.0	0.0	-425.7
537	422221.02	5411776.63	365.31	0	N	8000	46.0	26.2	-188.0	0.0	0.0	88.0	831.6	-2.1	0.0	0.0	0.0	0.0	0.0	-1033.3
537	422221.02	5411776.63	365.31	0	E	32	25.2	26.2	-188.0	0.0	0.0	88.0	0.2	-5.9	0.0	0.0	0.0	0.0	0.0	-219.0
537	422221.02	5411776.63	365.31	0	E	63	50.7	26.2	-188.0	0.0	0.0	88.0	0.9	-5.9	0.0	0.0	0.0	0.0	0.0	-194.1
537	422221.02	5411776.63	365.31	0	E	125	57.1	26.2	-188.0	0.0	0.0	88.0	2.9	1.7	0.0	0.0	0.0	0.0	0.0	-197.4
537	422221.02	5411776.63	365.31	0	E	250	64.0	26.2	-188.0	0.0	0.0	88.0	7.4	-0.7	0.0	0.0	0.0	0.0	0.0	-192.5
537	422221.02	5411776.63	365.31	0	E	500	61.9	26.2	-188.0	0.0	0.0	88.0	13.7	-2.1	0.0	0.0	0.0	0.0	0.0	-199.5
537	422221.02	5411776.63	365.31	0	E	1000	63.0	26.2	-188.0	0.0	0.0	88.0	26.0	-2.1	0.0	0.0	0.0	0.0	0.0	-210.7
537	422221.02	5411776.63	365.31	0	E	2000	60.1	26.2	-188.0	0.0	0.0	88.0	68.8	-2.1	0.0	0.0	0.0	0.0	0.0	-256.3
537	422221.02	5411776.63	365.31	0	E	4000	55.1	26.2	-188.0	0.0	0.0	88.0	233.2	-2.1	0.0	0.0	0.0	0.0	0.0	-425.7
537	422221.02	5411776.63	365.31	0	E	8000	46.0	26.2	-188.0	0.0	0.0	88.0	831.6	-2.1	0.0	0.0	0.0	0.0	0.0	-1033.3
539	422599.68	5411860.36	365.00	0	D	32	25.2	25.7	0.0	0.0	0.0	87.8	0.2	-5.9	0.0	0.0	0.0	0.0	0.0	-31.2

Line Source, ISO 9613, Name: "TRE_TMA1", ID: ""																				
Nr.	X	Y	Z	Refl.	DEN	Freq.	Lw	l/a	Optime	K0	Dc	Adiv	Aatm	Agr	Afol	Ahous	Abar	Cmet	RL	Lr
	(m)	(m)	(m)			(Hz)	dB(A)	dB	dB	(dB)	(dB)	(dB)	(dB)	(dB)	(dB)	(dB)	(dB)	(dB)	(dB)	dB(A)
539	422599.68	5411860.36	365.00	0	D	63	50.7	25.7	0.0	0.0	0.0	87.8	0.8	-5.9	0.0	0.0	0.0	0.0	0.0	-6.3
539	422599.68	5411860.36	365.00	0	D	125	57.1	25.7	0.0	0.0	0.0	87.8	2.8	2.4	0.0	0.0	0.0	0.0	0.0	-10.2
539	422599.68	5411860.36	365.00	0	D	250	64.0	25.7	0.0	0.0	0.0	87.8	7.2	-0.4	0.0	0.0	0.0	0.0	0.0	-4.8
539	422599.68	5411860.36	365.00	0	D	500	61.9	25.7	0.0	0.0	0.0	87.8	13.3	-2.3	0.0	0.0	0.0	0.0	0.0	-11.2
539	422599.68	5411860.36	365.00	0	D	1000	63.0	25.7	0.0	0.0	0.0	87.8	25.2	-2.3	0.0	0.0	0.0	0.0	0.0	-22.0
539	422599.68	5411860.36	365.00	0	D	2000	60.1	25.7	0.0	0.0	0.0	87.8	66.7	-2.3	0.0	0.0	0.0	0.0	0.0	-66.3
539	422599.68	5411860.36	365.00	0	D	4000	55.1	25.7	0.0	0.0	0.0	87.8	226.1	-2.3	0.0	0.0	0.0	0.0	0.0	-230.8
539	422599.68	5411860.36	365.00	0	D	8000	46.0	25.7	0.0	0.0	0.0	87.8	806.5	-2.3	0.0	0.0	0.0	0.0	0.0	-820.3
539	422599.68	5411860.36	365.00	0	N	32	25.2	25.7	-188.0	0.0	0.0	87.8	0.2	-5.9	0.0	0.0	0.0	0.0	0.0	-219.2
539	422599.68	5411860.36	365.00	0	N	63	50.7	25.7	-188.0	0.0	0.0	87.8	0.8	-5.9	0.0	0.0	0.0	0.0	0.0	-194.3
539	422599.68	5411860.36	365.00	0	N	125	57.1	25.7	-188.0	0.0	0.0	87.8	2.8	2.4	0.0	0.0	0.0	0.0	0.0	-198.2
539	422599.68	5411860.36	365.00	0	N	250	64.0	25.7	-188.0	0.0	0.0	87.8	7.2	-0.4	0.0	0.0	0.0	0.0	0.0	-192.8
539	422599.68	5411860.36	365.00	0	N	500	61.9	25.7	-188.0	0.0	0.0	87.8	13.3	-2.3	0.0	0.0	0.0	0.0	0.0	-199.2
539	422599.68	5411860.36	365.00	0	N	1000	63.0	25.7	-188.0	0.0	0.0	87.8	25.2	-2.3	0.0	0.0	0.0	0.0	0.0	-210.0
539	422599.68	5411860.36	365.00	0	N	2000	60.1	25.7	-188.0	0.0	0.0	87.8	66.7	-2.3	0.0	0.0	0.0	0.0	0.0	-254.3
539	422599.68	5411860.36	365.00	0	N	4000	55.1	25.7	-188.0	0.0	0.0	87.8	226.1	-2.3	0.0	0.0	0.0	0.0	0.0	-418.8
539	422599.68	5411860.36	365.00	0	N	8000	46.0	25.7	-188.0	0.0	0.0	87.8	806.5	-2.3	0.0	0.0	0.0	0.0	0.0	-1008.3
539	422599.68	5411860.36	365.00	0	E	32	25.2	25.7	-188.0	0.0	0.0	87.8	0.2	-5.9	0.0	0.0	0.0	0.0	0.0	-219.2
539	422599.68	5411860.36	365.00	0	E	63	50.7	25.7	-188.0	0.0	0.0	87.8	0.8	-5.9	0.0	0.0	0.0	0.0	0.0	-194.3
539	422599.68	5411860.36	365.00	0	E	125	57.1	25.7	-188.0	0.0	0.0	87.8	2.8	2.4	0.0	0.0	0.0	0.0	0.0	-198.2
539	422599.68	5411860.36	365.00	0	E	250	64.0	25.7	-188.0	0.0	0.0	87.8	7.2	-0.4	0.0	0.0	0.0	0.0	0.0	-192.8
539	422599.68	5411860.36	365.00	0	E	500	61.9	25.7	-188.0	0.0	0.0	87.8	13.3	-2.3	0.0	0.0	0.0	0.0	0.0	-199.2
539	422599.68	5411860.36	365.00	0	E	1000	63.0	25.7	-188.0	0.0	0.0	87.8	25.2	-2.3	0.0	0.0	0.0	0.0	0.0	-210.0
539	422599.68	5411860.36	365.00	0	E	2000	60.1	25.7	-188.0	0.0	0.0	87.8	66.7	-2.3	0.0	0.0	0.0	0.0	0.0	-254.3
539	422599.68	5411860.36	365.00	0	E	4000	55.1	25.7	-188.0	0.0	0.0	87.8	226.1	-2.3	0.0	0.0	0.0	0.0	0.0	-418.8
539	422599.68	5411860.36	365.00	0	E	8000	46.0	25.7	-188.0	0.0	0.0	87.8	806.5	-2.3	0.0	0.0	0.0	0.0	0.0	-1008.3
543	421848.61	5411636.66	368.63	0	D	32	25.2	25.8	0.0	0.0	0.0	88.3	0.2	-5.9	0.0	0.0	0.0	0.0	0.0	-31.6
543	421848.61	5411636.66	368.63	0	D	63	50.7	25.8	0.0	0.0	0.0	88.3	0.9	-5.9	0.0	0.0	0.0	0.0	0.0	-6.7
543	421848.61	5411636.66	368.63	0	D	125	57.1	25.8	0.0	0.0	0.0	88.3	3.0	1.7	0.0	0.0	0.0	0.0	0.0	-10.0
543	421848.61	5411636.66	368.63	0	D	250	64.0	25.8	0.0	0.0	0.0	88.3	7.6	-0.8	0.0	0.0	0.0	0.0	0.0	-5.3
543	421848.61	5411636.66	368.63	0	D	500	61.9	25.8	0.0	0.0	0.0	88.3	14.1	-2.2	0.0	0.0	0.0	0.0	0.0	-12.4
543	421848.61	5411636.66	368.63	0	D	1000	63.0	25.8	0.0	0.0	0.0	88.3	26.7	-2.2	0.0	0.0	0.0	0.0	0.0	-24.0
543	421848.61	5411636.66	368.63	0	D	2000	60.1	25.8	0.0	0.0	0.0	88.3	70.6	-2.2	0.0	0.0	0.0	0.0	0.0	-70.7
543	421848.61	5411636.66	368.63	0	D	4000	55.1	25.8	0.0	0.0	0.0	88.3	239.3	-2.2	0.0	0.0	0.0	0.0	0.0	-244.5
543	421848.61	5411636.66	368.63	0	D	8000	46.0	25.8	0.0	0.0	0.0	88.3	853.5	-2.2	0.0	0.0	0.0	0.0	0.0	-867.8
543	421848.61	5411636.66	368.63	0	N	32	25.2	25.8	-188.0	0.0	0.0	88.3	0.2	-5.9	0.0	0.0	0.0	0.0	0.0	-219.6
543	421848.61	5411636.66	368.63	0	N	63	50.7	25.8	-188.0	0.0	0.0	88.3	0.9	-5.9	0.0	0.0	0.0	0.0	0.0	-194.7
543	421848.61	5411636.66	368.63	0	N	125	57.1	25.8	-188.0	0.0	0.0	88.3	3.0	1.7	0.0	0.0	0.0	0.0	0.0	-198.0
543	421848.61	5411636.66	368.63	0	N	250	64.0	25.8	-188.0	0.0	0.0	88.3	7.6	-0.8	0.0	0.0	0.0	0.0	0.0	-193.3
543	421848.61	5411636.66	368.63	0	N	500	61.9	25.8	-188.0	0.0	0.0	88.3	14.1	-2.2	0.0	0.0	0.0	0.0	0.0	-200.4
543	421848.61	5411636.66	368.63	0	N	1000	63.0	25.8	-188.0	0.0	0.0	88.3	26.7	-2.2	0.0	0.0	0.0	0.0	0.0	-212.0
543	421848.61	5411636.66	368.63	0	N	2000	60.1	25.8	-188.0	0.0	0.0	88.3	70.6	-2.2	0.0	0.0	0.0	0.0	0.0	-258.7
543	421848.61	5411636.66	368.63	0	N	4000	55.1	25.8	-188.0	0.0	0.0	88.3	239.3	-2.2	0.0	0.0	0.0	0.0	0.0	-432.5
543	421848.61	5411636.66	368.63	0	N	8000	46.0	25.8	-188.0	0.0	0.0	88.3	853.5	-2.2	0.0	0.0	0.0	0.0	0.0	-1055.8
543	421848.61	5411636.66	368.63	0	E	32	25.2	25.8	-188.0	0.0	0.0	88.3	0.2	-5.9	0.0	0.0	0.0	0.0	0.0	-219.6
543	421848.61	5411636.66	368.63	0	E	63	50.7	25.8	-188.0	0.0	0.0	88.3	0.9	-5.9	0.0	0.0	0.0	0.0	0.0	-194.7
543	421848.61	5411636.66	368.63	0	E	125	57.1	25.8	-188.0	0.0	0.0	88.3	3.0	1.7	0.0	0.0	0.0	0.0	0.0	-198.0
543	421848.61	5411636.66	368.63	0	E	250	64.0	25.8	-188.0	0.0	0.0	88.3	7.6	-0.8	0.0	0.0	0.0	0.0	0.0	-193.3
543	421848.61	5411636.66	368.63	0	E	500	61.9	25.8	-188.0	0.0	0.0	88.3	14.1	-2.2	0.0	0.0	0.0	0.0	0.0	-200.4
543	421848.61	5411636.66	368.63	0	E	1000	63.0	25.8	-188.0	0.0	0.0	88.3	26.7	-2.2	0.0	0.0	0.0	0.0	0.0	-212.0
543	421848.61	5411636.66	368.63	0	E	2000	60.1	25.8	-188.0	0.0	0.0	88.3	70.6	-2.2	0.0	0.0	0.0	0.0	0.0	-258.7
543	421848.61	5411636.66	368.63	0	E	4000	55.1	25.8	-188.0	0.0	0.0	88.3	239.3	-2.2	0.0	0.0	0.0	0.0	0.0	-432.5
543	421848.61	5411636.66	368.63	0	E	8000	46.0	25.8	-188.0	0.0	0.0	88.3	853.5	-2.2	0.0	0.0	0.0	0.0	0.0	-1055.8
546	423611.27	5411703.78	364.95	0	D	32	25.2	22.8	0.0	0.0	0.0	86.7	0.2	-5.9	0.0	0.0	0.0	0.0	0.0	-33.0
546	423611.27	5411703.78	364.95	0	D	63	50.7	22.8	0.0	0.0	0.0	86.7	0.7	-5.9	0.0	0.0	0.0	0.0	0.0	-8.1
546	423611.27	5411703.78	364.95	0	D	125	57.1	22.8	0.0	0.0	0.0	86.7	2.5	0.8	0.0	0.0	0.0	0.0	0.0	-10.1
546	423611.27	5411703.78	364.95	0	D	250	64.0	22.8	0.0	0.0	0.0	86.7	6.4	-1.6	0.0	0.0	0.0	0.0	0.0	-4.6
546	423611.27	5411703.78	364.95	0	D	500	61.9	22.8	0.0	0.0	0.0	86.7	11.8	-3.0	0.0	0.0	0.0	0.0	0.0	-10.8
546	423611.27	5411703.78	364.95	0	D	1000	63.0	22.8	0.0	0.0	0.0	86.7	22.3	-3.0	0.0	0.0	0.0	0.0	0.0	-20.2
546	423611.27	5411703.78	364.95	0	D	2000	60.1	22.8	0.0	0.0	0.0	86.7	59.0	-3.0	0.0	0.0	0.0	0.0	0.0	-59.8
546	423611.27	5411703.78	364.95	0	D	4000	55.1	22.8	0.0	0.0	0.0	86.7	200.2	-3.0	0.0	0.0	0.0	0.0	0.0	-206.0
546	423611.27	5411703.78	364.95	0	D	8000	46.0	22.8	0.0	0.0	0.0	86.7	714.0	-3.0	0.0	0.0	0.0	0.0	0.0	-728.9
546	423611.27	5411703.78	364.95	0	N	32	25.2	22.8	-188.0	0.0	0.0	86.7	0.2	-5.9	0.0	0.0	0.0	0.0	0.0	-221.0

Line Source, ISO 9613, Name: "TRE_TMA1", ID: ""																				
Nr.	X	Y	Z	Refl.	DEN	Freq.	Lw	l/a	Optime	K0	Dc	Adiv	Aatm	Agr	Afol	Ahous	Abar	Cmet	RL	Lr
	(m)	(m)	(m)			(Hz)	dB(A)	dB	dB	(dB)	(dB)	(dB)	(dB)	(dB)	(dB)	(dB)	(dB)	(dB)	(dB)	dB(A)
546	423611.27	5411703.78	364.95	0	N	63	50.7	22.8	-188.0	0.0	0.0	86.7	0.7	-5.9	0.0	0.0	0.0	0.0	0.0	-196.1
546	423611.27	5411703.78	364.95	0	N	125	57.1	22.8	-188.0	0.0	0.0	86.7	2.5	0.8	0.0	0.0	0.0	0.0	0.0	-198.1
546	423611.27	5411703.78	364.95	0	N	250	64.0	22.8	-188.0	0.0	0.0	86.7	6.4	-1.6	0.0	0.0	0.0	0.0	0.0	-192.6
546	423611.27	5411703.78	364.95	0	N	500	61.9	22.8	-188.0	0.0	0.0	86.7	11.8	-3.0	0.0	0.0	0.0	0.0	0.0	-198.8
546	423611.27	5411703.78	364.95	0	N	1000	63.0	22.8	-188.0	0.0	0.0	86.7	22.3	-3.0	0.0	0.0	0.0	0.0	0.0	-208.2
546	423611.27	5411703.78	364.95	0	N	2000	60.1	22.8	-188.0	0.0	0.0	86.7	59.0	-3.0	0.0	0.0	0.0	0.0	0.0	-247.8
546	423611.27	5411703.78	364.95	0	N	4000	55.1	22.8	-188.0	0.0	0.0	86.7	200.2	-3.0	0.0	0.0	0.0	0.0	0.0	-394.0
546	423611.27	5411703.78	364.95	0	N	8000	46.0	22.8	-188.0	0.0	0.0	86.7	714.0	-3.0	0.0	0.0	0.0	0.0	0.0	-916.9
546	423611.27	5411703.78	364.95	0	E	32	25.2	22.8	-188.0	0.0	0.0	86.7	0.2	-5.9	0.0	0.0	0.0	0.0	0.0	-221.0
546	423611.27	5411703.78	364.95	0	E	63	50.7	22.8	-188.0	0.0	0.0	86.7	0.7	-5.9	0.0	0.0	0.0	0.0	0.0	-196.1
546	423611.27	5411703.78	364.95	0	E	125	57.1	22.8	-188.0	0.0	0.0	86.7	2.5	0.8	0.0	0.0	0.0	0.0	0.0	-198.1
546	423611.27	5411703.78	364.95	0	E	250	64.0	22.8	-188.0	0.0	0.0	86.7	6.4	-1.6	0.0	0.0	0.0	0.0	0.0	-192.6
546	423611.27	5411703.78	364.95	0	E	500	61.9	22.8	-188.0	0.0	0.0	86.7	11.8	-3.0	0.0	0.0	0.0	0.0	0.0	-198.8
546	423611.27	5411703.78	364.95	0	E	1000	63.0	22.8	-188.0	0.0	0.0	86.7	22.3	-3.0	0.0	0.0	0.0	0.0	0.0	-208.2
546	423611.27	5411703.78	364.95	0	E	2000	60.1	22.8	-188.0	0.0	0.0	86.7	59.0	-3.0	0.0	0.0	0.0	0.0	0.0	-247.8
546	423611.27	5411703.78	364.95	0	E	4000	55.1	22.8	-188.0	0.0	0.0	86.7	200.2	-3.0	0.0	0.0	0.0	0.0	0.0	-394.0
546	423611.27	5411703.78	364.95	0	E	8000	46.0	22.8	-188.0	0.0	0.0	86.7	714.0	-3.0	0.0	0.0	0.0	0.0	0.0	-916.9
552	423576.63	5411590.41	364.00	0	D	32	25.2	19.8	0.0	0.0	0.0	86.6	0.2	-5.9	0.0	0.0	0.0	0.0	0.0	-35.9
552	423576.63	5411590.41	364.00	0	D	63	50.7	19.8	0.0	0.0	0.0	86.6	0.7	-5.9	0.0	0.0	0.0	0.0	0.0	-10.9
552	423576.63	5411590.41	364.00	0	D	125	57.1	19.8	0.0	0.0	0.0	86.6	2.5	0.9	0.0	0.0	0.0	0.0	0.0	-13.0
552	423576.63	5411590.41	364.00	0	D	250	64.0	19.8	0.0	0.0	0.0	86.6	6.3	-1.6	0.0	0.0	0.0	0.0	0.0	-7.5
552	423576.63	5411590.41	364.00	0	D	500	61.9	19.8	0.0	0.0	0.0	86.6	11.7	-3.0	0.0	0.0	0.0	0.0	0.0	-13.5
552	423576.63	5411590.41	364.00	0	D	1000	63.0	19.8	0.0	0.0	0.0	86.6	22.1	-3.0	0.0	0.0	0.0	0.0	0.0	-22.9
552	423576.63	5411590.41	364.00	0	D	2000	60.1	19.8	0.0	0.0	0.0	86.6	58.4	-3.0	0.0	0.0	0.0	0.0	0.0	-62.1
552	423576.63	5411590.41	364.00	0	D	4000	55.1	19.8	0.0	0.0	0.0	86.6	198.0	-3.0	0.0	0.0	0.0	0.0	0.0	-206.7
552	423576.63	5411590.41	364.00	0	D	8000	46.0	19.8	0.0	0.0	0.0	86.6	706.3	-3.0	0.0	0.0	0.0	0.0	0.0	-724.1
552	423576.63	5411590.41	364.00	0	N	32	25.2	19.8	-188.0	0.0	0.0	86.6	0.2	-5.9	0.0	0.0	0.0	0.0	0.0	-223.9
552	423576.63	5411590.41	364.00	0	N	63	50.7	19.8	-188.0	0.0	0.0	86.6	0.7	-5.9	0.0	0.0	0.0	0.0	0.0	-198.9
552	423576.63	5411590.41	364.00	0	N	125	57.1	19.8	-188.0	0.0	0.0	86.6	2.5	0.9	0.0	0.0	0.0	0.0	0.0	-201.0
552	423576.63	5411590.41	364.00	0	N	250	64.0	19.8	-188.0	0.0	0.0	86.6	6.3	-1.6	0.0	0.0	0.0	0.0	0.0	-195.5
552	423576.63	5411590.41	364.00	0	N	500	61.9	19.8	-188.0	0.0	0.0	86.6	11.7	-3.0	0.0	0.0	0.0	0.0	0.0	-201.5
552	423576.63	5411590.41	364.00	0	N	1000	63.0	19.8	-188.0	0.0	0.0	86.6	22.1	-3.0	0.0	0.0	0.0	0.0	0.0	-210.9
552	423576.63	5411590.41	364.00	0	N	2000	60.1	19.8	-188.0	0.0	0.0	86.6	58.4	-3.0	0.0	0.0	0.0	0.0	0.0	-250.1
552	423576.63	5411590.41	364.00	0	N	4000	55.1	19.8	-188.0	0.0	0.0	86.6	198.0	-3.0	0.0	0.0	0.0	0.0	0.0	-394.7
552	423576.63	5411590.41	364.00	0	N	8000	46.0	19.8	-188.0	0.0	0.0	86.6	706.3	-3.0	0.0	0.0	0.0	0.0	0.0	-912.1
552	423576.63	5411590.41	364.00	0	E	32	25.2	19.8	-188.0	0.0	0.0	86.6	0.2	-5.9	0.0	0.0	0.0	0.0	0.0	-223.9
552	423576.63	5411590.41	364.00	0	E	63	50.7	19.8	-188.0	0.0	0.0	86.6	0.7	-5.9	0.0	0.0	0.0	0.0	0.0	-198.9
552	423576.63	5411590.41	364.00	0	E	125	57.1	19.8	-188.0	0.0	0.0	86.6	2.5	0.9	0.0	0.0	0.0	0.0	0.0	-201.0
552	423576.63	5411590.41	364.00	0	E	250	64.0	19.8	-188.0	0.0	0.0	86.6	6.3	-1.6	0.0	0.0	0.0	0.0	0.0	-195.5
552	423576.63	5411590.41	364.00	0	E	500	61.9	19.8	-188.0	0.0	0.0	86.6	11.7	-3.0	0.0	0.0	0.0	0.0	0.0	-201.5
552	423576.63	5411590.41	364.00	0	E	1000	63.0	19.8	-188.0	0.0	0.0	86.6	22.1	-3.0	0.0	0.0	0.0	0.0	0.0	-210.9
552	423576.63	5411590.41	364.00	0	E	2000	60.1	19.8	-188.0	0.0	0.0	86.6	58.4	-3.0	0.0	0.0	0.0	0.0	0.0	-250.1
552	423576.63	5411590.41	364.00	0	E	4000	55.1	19.8	-188.0	0.0	0.0	86.6	198.0	-3.0	0.0	0.0	0.0	0.0	0.0	-394.7
552	423576.63	5411590.41	364.00	0	E	8000	46.0	19.8	-188.0	0.0	0.0	86.6	706.3	-3.0	0.0	0.0	0.0	0.0	0.0	-912.1

Line Source, ISO 9613, Name: "TRL_TMA1", ID: ""																				
Nr.	X	Y	Z	Refl.	DEN	Freq.	Lw	l/a	Optime	K0	Dc	Adiv	Aatm	Agr	Afol	Ahous	Abar	Cmet	RL	Lr
	(m)	(m)	(m)			(Hz)	dB(A)	dB	dB	(dB)	(dB)	(dB)	(dB)	(dB)	(dB)	(dB)	(dB)	(dB)	(dB)	dB(A)
522	423371.94	5411803.76	365.71	0	D	32	25.2	26.6	0.0	0.0	0.0	87.0	0.2	-5.9	0.0	0.0	0.0	0.0	0.0	-29.5
522	423371.94	5411803.76	365.71	0	D	63	50.7	26.6	0.0	0.0	0.0	87.0	0.8	-5.9	0.0	0.0	0.0	0.0	0.0	-4.6
522	423371.94	5411803.76	365.71	0	D	125	57.1	26.6	0.0	0.0	0.0	87.0	2.6	0.8	0.0	0.0	0.0	0.0	0.0	-6.7
522	423371.94	5411803.76	365.71	0	D	250	64.0	26.6	0.0	0.0	0.0	87.0	6.6	-1.6	0.0	0.0	0.0	0.0	0.0	-1.3
522	423371.94	5411803.76	365.71	0	D	500	61.9	26.6	0.0	0.0	0.0	87.0	12.2	-3.0	0.0	0.0	0.0	0.0	0.0	-7.7
522	423371.94	5411803.76	365.71	0	D	1000	63.0	26.6	0.0	0.0	0.0	87.0	23.2	-3.0	0.0	0.0	0.0	0.0	0.0	-17.5
522	423371.94	5411803.76	365.71	0	D	2000	60.1	26.6	0.0	0.0	0.0	87.0	61.2	-3.0	0.0	0.0	0.0	0.0	0.0	-58.5
522	423371.94	5411803.76	365.71	0	D	4000	55.1	26.6	0.0	0.0	0.0	87.0	207.7	-3.0	0.0	0.0	0.0	0.0	0.0	-209.9
522	423371.94	5411803.76	365.71	0	D	8000	46.0	26.6	0.0	0.0	0.0	87.0	740.8	-3.0	0.0	0.0	0.0	0.0	0.0	-752.1
522	423371.94	5411803.76	365.71	0	N	32	25.2	26.6	-188.0	0.0	0.0	87.0	0.2	-5.9	0.0	0.0	0.0	0.0	0.0	-217.5
522	423371.94	5411803.76	365.71	0	N	63	50.7	26.6	-188.0	0.0	0.0	87.0	0.8	-5.9	0.0	0.0	0.0	0.0	0.0	-192.6
522	423371.94	5411803.76	365.71	0	N	125	57.1	26.6	-188.0	0.0	0.0	87.0	2.6	0.8	0.0	0.0	0.0	0.0	0.0	-194.7
522	423371.94	5411803.76	365.71	0	N	250	64.0	26.6	-188.0	0.0	0.0	87.0	6.6	-1.6	0.0	0.0	0.0	0.0	0.0	-189.3
522	423371.94	5411803.76	365.71	0	N	500	61.9	26.6	-188.0	0.0	0.0	87.0	12.2	-3.0	0.0	0.0	0.0	0.0	0.0	-195.7
522	423371.94	5411803.76	365.71	0	N	1000	63.0	26.6	-188.0	0.0	0.0	87.0	23.2	-3.0	0.0	0.0	0.0	0.0	0.0	-205.5

Line Source, ISO 9613, Name: "TRL_TMA1", ID: ""																				
Nr.	X	Y	Z	Refl.	DEN	Freq.	Lw	l/a	Optime	K0	Dc	Adiv	Aatm	Agr	Afol	Ahous	Abar	Cmet	RL	Lr
	(m)	(m)	(m)			(Hz)	dB(A)	dB	dB	(dB)	(dB)	(dB)	(dB)	(dB)	(dB)	(dB)	(dB)	(dB)	(dB)	dB(A)
522	423371.94	5411803.76	365.71	0	N	2000	60.1	26.6	-188.0	0.0	0.0	87.0	61.2	-3.0	0.0	0.0	0.0	0.0	0.0	-246.5
522	423371.94	5411803.76	365.71	0	N	4000	55.1	26.6	-188.0	0.0	0.0	87.0	207.7	-3.0	0.0	0.0	0.0	0.0	0.0	-397.9
522	423371.94	5411803.76	365.71	0	N	8000	46.0	26.6	-188.0	0.0	0.0	87.0	740.8	-3.0	0.0	0.0	0.0	0.0	0.0	-940.1
522	423371.94	5411803.76	365.71	0	E	32	25.2	26.6	-188.0	0.0	0.0	87.0	0.2	-5.9	0.0	0.0	0.0	0.0	0.0	-217.5
522	423371.94	5411803.76	365.71	0	E	63	50.7	26.6	-188.0	0.0	0.0	87.0	0.8	-5.9	0.0	0.0	0.0	0.0	0.0	-192.6
522	423371.94	5411803.76	365.71	0	E	125	57.1	26.6	-188.0	0.0	0.0	87.0	2.6	0.8	0.0	0.0	0.0	0.0	0.0	-194.7
522	423371.94	5411803.76	365.71	0	E	250	64.0	26.6	-188.0	0.0	0.0	87.0	6.6	-1.6	0.0	0.0	0.0	0.0	0.0	-189.3
522	423371.94	5411803.76	365.71	0	E	500	61.9	26.6	-188.0	0.0	0.0	87.0	12.2	-3.0	0.0	0.0	0.0	0.0	0.0	-195.7
522	423371.94	5411803.76	365.71	0	E	1000	63.0	26.6	-188.0	0.0	0.0	87.0	23.2	-3.0	0.0	0.0	0.0	0.0	0.0	-205.5
522	423371.94	5411803.76	365.71	0	E	2000	60.1	26.6	-188.0	0.0	0.0	87.0	61.2	-3.0	0.0	0.0	0.0	0.0	0.0	-246.5
522	423371.94	5411803.76	365.71	0	E	4000	55.1	26.6	-188.0	0.0	0.0	87.0	207.7	-3.0	0.0	0.0	0.0	0.0	0.0	-397.9
522	423371.94	5411803.76	365.71	0	E	8000	46.0	26.6	-188.0	0.0	0.0	87.0	740.8	-3.0	0.0	0.0	0.0	0.0	0.0	-940.1
535	422963.35	5411839.19	365.32	0	D	32	25.2	25.6	0.0	0.0	0.0	87.4	0.2	-5.9	0.0	0.0	0.0	0.0	0.0	-30.9
535	422963.35	5411839.19	365.32	0	D	63	50.7	25.6	0.0	0.0	0.0	87.4	0.8	-5.9	0.0	0.0	0.0	0.0	0.0	-6.0
535	422963.35	5411839.19	365.32	0	D	125	57.1	25.6	0.0	0.0	0.0	87.4	2.7	1.1	0.0	0.0	0.0	0.0	0.0	-8.5
535	422963.35	5411839.19	365.32	0	D	250	64.0	25.6	0.0	0.0	0.0	87.4	6.9	-1.4	0.0	0.0	0.0	0.0	0.0	-3.4
535	422963.35	5411839.19	365.32	0	D	500	61.9	25.6	0.0	0.0	0.0	87.4	12.8	-2.7	0.0	0.0	0.0	0.0	0.0	-9.9
535	422963.35	5411839.19	365.32	0	D	1000	63.0	25.6	0.0	0.0	0.0	87.4	24.3	-2.8	0.0	0.0	0.0	0.0	0.0	-20.3
535	422963.35	5411839.19	365.32	0	D	2000	60.1	25.6	0.0	0.0	0.0	87.4	64.1	-2.8	0.0	0.0	0.0	0.0	0.0	-63.1
535	422963.35	5411839.19	365.32	0	D	4000	55.1	25.6	0.0	0.0	0.0	87.4	217.4	-2.8	0.0	0.0	0.0	0.0	0.0	-221.4
535	422963.35	5411839.19	365.32	0	D	8000	46.0	25.6	0.0	0.0	0.0	87.4	775.4	-2.8	0.0	0.0	0.0	0.0	0.0	-788.5
535	422963.35	5411839.19	365.32	0	N	32	25.2	25.6	-188.0	0.0	0.0	87.4	0.2	-5.9	0.0	0.0	0.0	0.0	0.0	-218.9
535	422963.35	5411839.19	365.32	0	N	63	50.7	25.6	-188.0	0.0	0.0	87.4	0.8	-5.9	0.0	0.0	0.0	0.0	0.0	-194.0
535	422963.35	5411839.19	365.32	0	N	125	57.1	25.6	-188.0	0.0	0.0	87.4	2.7	1.1	0.0	0.0	0.0	0.0	0.0	-196.5
535	422963.35	5411839.19	365.32	0	N	250	64.0	25.6	-188.0	0.0	0.0	87.4	6.9	-1.4	0.0	0.0	0.0	0.0	0.0	-191.4
535	422963.35	5411839.19	365.32	0	N	500	61.9	25.6	-188.0	0.0	0.0	87.4	12.8	-2.7	0.0	0.0	0.0	0.0	0.0	-197.9
535	422963.35	5411839.19	365.32	0	N	1000	63.0	25.6	-188.0	0.0	0.0	87.4	24.3	-2.8	0.0	0.0	0.0	0.0	0.0	-208.3
535	422963.35	5411839.19	365.32	0	N	2000	60.1	25.6	-188.0	0.0	0.0	87.4	64.1	-2.8	0.0	0.0	0.0	0.0	0.0	-251.1
535	422963.35	5411839.19	365.32	0	N	4000	55.1	25.6	-188.0	0.0	0.0	87.4	217.4	-2.8	0.0	0.0	0.0	0.0	0.0	-409.4
535	422963.35	5411839.19	365.32	0	N	8000	46.0	25.6	-188.0	0.0	0.0	87.4	775.4	-2.8	0.0	0.0	0.0	0.0	0.0	-976.5
535	422963.35	5411839.19	365.32	0	E	32	25.2	25.6	-188.0	0.0	0.0	87.4	0.2	-5.9	0.0	0.0	0.0	0.0	0.0	-218.9
535	422963.35	5411839.19	365.32	0	E	63	50.7	25.6	-188.0	0.0	0.0	87.4	0.8	-5.9	0.0	0.0	0.0	0.0	0.0	-194.0
535	422963.35	5411839.19	365.32	0	E	125	57.1	25.6	-188.0	0.0	0.0	87.4	2.7	1.1	0.0	0.0	0.0	0.0	0.0	-196.5
535	422963.35	5411839.19	365.32	0	E	250	64.0	25.6	-188.0	0.0	0.0	87.4	6.9	-1.4	0.0	0.0	0.0	0.0	0.0	-191.4
535	422963.35	5411839.19	365.32	0	E	500	61.9	25.6	-188.0	0.0	0.0	87.4	12.8	-2.7	0.0	0.0	0.0	0.0	0.0	-197.9
535	422963.35	5411839.19	365.32	0	E	1000	63.0	25.6	-188.0	0.0	0.0	87.4	24.3	-2.8	0.0	0.0	0.0	0.0	0.0	-208.3
535	422963.35	5411839.19	365.32	0	E	2000	60.1	25.6	-188.0	0.0	0.0	87.4	64.1	-2.8	0.0	0.0	0.0	0.0	0.0	-251.1
535	422963.35	5411839.19	365.32	0	E	4000	55.1	25.6	-188.0	0.0	0.0	87.4	217.4	-2.8	0.0	0.0	0.0	0.0	0.0	-409.4
535	422963.35	5411839.19	365.32	0	E	8000	46.0	25.6	-188.0	0.0	0.0	87.4	775.4	-2.8	0.0	0.0	0.0	0.0	0.0	-976.5
536	422221.02	5411776.63	365.31	0	D	32	25.2	26.2	0.0	0.0	0.0	88.0	0.2	-5.9	0.0	0.0	0.0	0.0	0.0	-31.0
536	422221.02	5411776.63	365.31	0	D	63	50.7	26.2	0.0	0.0	0.0	88.0	0.9	-5.9	0.0	0.0	0.0	0.0	0.0	-6.1
536	422221.02	5411776.63	365.31	0	D	125	57.1	26.2	0.0	0.0	0.0	88.0	2.9	1.7	0.0	0.0	0.0	0.0	0.0	-9.4
536	422221.02	5411776.63	365.31	0	D	250	64.0	26.2	0.0	0.0	0.0	88.0	7.4	-0.7	0.0	0.0	0.0	0.0	0.0	-4.5
536	422221.02	5411776.63	365.31	0	D	500	61.9	26.2	0.0	0.0	0.0	88.0	13.7	-2.1	0.0	0.0	0.0	0.0	0.0	-11.5
536	422221.02	5411776.63	365.31	0	D	1000	63.0	26.2	0.0	0.0	0.0	88.0	26.0	-2.1	0.0	0.0	0.0	0.0	0.0	-22.7
536	422221.02	5411776.63	365.31	0	D	2000	60.1	26.2	0.0	0.0	0.0	88.0	68.8	-2.1	0.0	0.0	0.0	0.0	0.0	-68.3
536	422221.02	5411776.63	365.31	0	D	4000	55.1	26.2	0.0	0.0	0.0	88.0	233.2	-2.1	0.0	0.0	0.0	0.0	0.0	-237.7
536	422221.02	5411776.63	365.31	0	D	8000	46.0	26.2	0.0	0.0	0.0	88.0	831.6	-2.1	0.0	0.0	0.0	0.0	0.0	-845.3
536	422221.02	5411776.63	365.31	0	N	32	25.2	26.2	-188.0	0.0	0.0	88.0	0.2	-5.9	0.0	0.0	0.0	0.0	0.0	-219.0
536	422221.02	5411776.63	365.31	0	N	63	50.7	26.2	-188.0	0.0	0.0	88.0	0.9	-5.9	0.0	0.0	0.0	0.0	0.0	-194.1
536	422221.02	5411776.63	365.31	0	N	125	57.1	26.2	-188.0	0.0	0.0	88.0	2.9	1.7	0.0	0.0	0.0	0.0	0.0	-197.4
536	422221.02	5411776.63	365.31	0	N	250	64.0	26.2	-188.0	0.0	0.0	88.0	7.4	-0.7	0.0	0.0	0.0	0.0	0.0	-192.5
536	422221.02	5411776.63	365.31	0	N	500	61.9	26.2	-188.0	0.0	0.0	88.0	13.7	-2.1	0.0	0.0	0.0	0.0	0.0	-199.5
536	422221.02	5411776.63	365.31	0	N	1000	63.0	26.2	-188.0	0.0	0.0	88.0	26.0	-2.1	0.0	0.0	0.0	0.0	0.0	-210.7
536	422221.02	5411776.63	365.31	0	N	2000	60.1	26.2	-188.0	0.0	0.0	88.0	68.8	-2.1	0.0	0.0	0.0	0.0	0.0	-256.3
536	422221.02	5411776.63	365.31	0	N	4000	55.1	26.2	-188.0	0.0	0.0	88.0	233.2	-2.1	0.0	0.0	0.0	0.0	0.0	-425.7
536	422221.02	5411776.63	365.31	0	N	8000	46.0	26.2	-188.0	0.0	0.0	88.0	831.6	-2.1	0.0	0.0	0.0	0.0	0.0	033.3
536	422221.02	5411776.63	365.31	0	E	32	25.2	26.2	-188.0	0.0	0.0	88.0	0.2	-5.9	0.0	0.0	0.0	0.0	0.0	-219.0
536	422221.02	5411776.63	365.31	0	E	63	50.7	26.2	-188.0	0.0	0.0	88.0	0.9	-5.9	0.0	0.0	0.0	0.0	0.0	-194.1
536	422221.02	5411776.63	365.31	0	E	125	57.1	26.2	-188.0	0.0	0.0	88.0	2.9	1.7	0.0	0.0	0.0	0.0	0.0	-197.4
536	422221.02	5411776.63	365.31	0	E	250	64.0	26.2	-188.0	0.0	0.0	88.0	7.4	-0.7	0.0	0.0	0.0	0.0	0.0	-192.5
536	422221.02	5411776.63	365.31	0	E	500	61.9	26.2	-188.0	0.0	0.0	88.0	13.7	-2.1	0.0	0.0	0.0	0.0	0.0	-199.5
536	422221.02	5411776.63	365.31	0	E	1000	63.0	26.2	-188.0	0.0	0.0	88.0	26.0	-2.1	0.0	0.0	0.0	0.0	0.0	-210.7

Line Source, ISO 9613, Name: "TRL_TMA1", ID: ""																				
Nr.	X	Y	Z	Refl.	DEN	Freq.	Lw	l/a	Optime	K0	Dc	Adiv	Aatm	Agr	Afol	Ahous	Abar	Cmet	RL	Lr
	(m)	(m)	(m)			(Hz)	dB(A)	dB	dB	(dB)	(dB)	(dB)	(dB)	(dB)	(dB)	(dB)	(dB)	(dB)	(dB)	dB(A)
536	422221.02	5411776.63	365.31	0	E	2000	60.1	26.2	-188.0	0.0	0.0	88.0	68.8	-2.1	0.0	0.0	0.0	0.0	0.0	-256.3
536	422221.02	5411776.63	365.31	0	E	4000	55.1	26.2	-188.0	0.0	0.0	88.0	233.2	-2.1	0.0	0.0	0.0	0.0	0.0	-425.7
536	422221.02	5411776.63	365.31	0	E	8000	46.0	26.2	-188.0	0.0	0.0	88.0	831.6	-2.1	0.0	0.0	0.0	0.0	0.0	-1033.3
538	422599.68	5411860.36	365.00	0	D	32	25.2	25.7	0.0	0.0	0.0	87.8	0.2	-5.9	0.0	0.0	0.0	0.0	0.0	-31.2
538	422599.68	5411860.36	365.00	0	D	63	50.7	25.7	0.0	0.0	0.0	87.8	0.8	-5.9	0.0	0.0	0.0	0.0	0.0	-6.3
538	422599.68	5411860.36	365.00	0	D	125	57.1	25.7	0.0	0.0	0.0	87.8	2.8	2.4	0.0	0.0	0.0	0.0	0.0	-10.2
538	422599.68	5411860.36	365.00	0	D	250	64.0	25.7	0.0	0.0	0.0	87.8	7.2	-0.4	0.0	0.0	0.0	0.0	0.0	-4.8
538	422599.68	5411860.36	365.00	0	D	500	61.9	25.7	0.0	0.0	0.0	87.8	13.3	-2.3	0.0	0.0	0.0	0.0	0.0	-11.2
538	422599.68	5411860.36	365.00	0	D	1000	63.0	25.7	0.0	0.0	0.0	87.8	25.2	-2.3	0.0	0.0	0.0	0.0	0.0	-22.0
538	422599.68	5411860.36	365.00	0	D	2000	60.1	25.7	0.0	0.0	0.0	87.8	66.7	-2.3	0.0	0.0	0.0	0.0	0.0	-66.3
538	422599.68	5411860.36	365.00	0	D	4000	55.1	25.7	0.0	0.0	0.0	87.8	226.1	-2.3	0.0	0.0	0.0	0.0	0.0	-230.8
538	422599.68	5411860.36	365.00	0	D	8000	46.0	25.7	0.0	0.0	0.0	87.8	806.5	-2.3	0.0	0.0	0.0	0.0	0.0	-820.3
538	422599.68	5411860.36	365.00	0	N	32	25.2	25.7	-188.0	0.0	0.0	87.8	0.2	-5.9	0.0	0.0	0.0	0.0	0.0	-219.2
538	422599.68	5411860.36	365.00	0	N	63	50.7	25.7	-188.0	0.0	0.0	87.8	0.8	-5.9	0.0	0.0	0.0	0.0	0.0	-194.3
538	422599.68	5411860.36	365.00	0	N	125	57.1	25.7	-188.0	0.0	0.0	87.8	2.8	2.4	0.0	0.0	0.0	0.0	0.0	-198.2
538	422599.68	5411860.36	365.00	0	N	250	64.0	25.7	-188.0	0.0	0.0	87.8	7.2	-0.4	0.0	0.0	0.0	0.0	0.0	-192.8
538	422599.68	5411860.36	365.00	0	N	500	61.9	25.7	-188.0	0.0	0.0	87.8	13.3	-2.3	0.0	0.0	0.0	0.0	0.0	-199.2
538	422599.68	5411860.36	365.00	0	N	1000	63.0	25.7	-188.0	0.0	0.0	87.8	25.2	-2.3	0.0	0.0	0.0	0.0	0.0	-210.0
538	422599.68	5411860.36	365.00	0	N	2000	60.1	25.7	-188.0	0.0	0.0	87.8	66.7	-2.3	0.0	0.0	0.0	0.0	0.0	-254.3
538	422599.68	5411860.36	365.00	0	N	4000	55.1	25.7	-188.0	0.0	0.0	87.8	226.1	-2.3	0.0	0.0	0.0	0.0	0.0	-418.8
538	422599.68	5411860.36	365.00	0	N	8000	46.0	25.7	-188.0	0.0	0.0	87.8	806.5	-2.3	0.0	0.0	0.0	0.0	0.0	-1008.3
538	422599.68	5411860.36	365.00	0	E	32	25.2	25.7	-188.0	0.0	0.0	87.8	0.2	-5.9	0.0	0.0	0.0	0.0	0.0	-219.2
538	422599.68	5411860.36	365.00	0	E	63	50.7	25.7	-188.0	0.0	0.0	87.8	0.8	-5.9	0.0	0.0	0.0	0.0	0.0	-194.3
538	422599.68	5411860.36	365.00	0	E	125	57.1	25.7	-188.0	0.0	0.0	87.8	2.8	2.4	0.0	0.0	0.0	0.0	0.0	-198.2
538	422599.68	5411860.36	365.00	0	E	250	64.0	25.7	-188.0	0.0	0.0	87.8	7.2	-0.4	0.0	0.0	0.0	0.0	0.0	-192.8
538	422599.68	5411860.36	365.00	0	E	500	61.9	25.7	-188.0	0.0	0.0	87.8	13.3	-2.3	0.0	0.0	0.0	0.0	0.0	-199.2
538	422599.68	5411860.36	365.00	0	E	1000	63.0	25.7	-188.0	0.0	0.0	87.8	25.2	-2.3	0.0	0.0	0.0	0.0	0.0	-210.0
538	422599.68	5411860.36	365.00	0	E	2000	60.1	25.7	-188.0	0.0	0.0	87.8	66.7	-2.3	0.0	0.0	0.0	0.0	0.0	-254.3
538	422599.68	5411860.36	365.00	0	E	4000	55.1	25.7	-188.0	0.0	0.0	87.8	226.1	-2.3	0.0	0.0	0.0	0.0	0.0	-418.8
538	422599.68	5411860.36	365.00	0	E	8000	46.0	25.7	-188.0	0.0	0.0	87.8	806.5	-2.3	0.0	0.0	0.0	0.0	0.0	-1008.3
542	421848.61	5411636.66	368.63	0	D	32	25.2	25.8	0.0	0.0	0.0	88.3	0.2	-5.9	0.0	0.0	0.0	0.0	0.0	-31.6
542	421848.61	5411636.66	368.63	0	D	63	50.7	25.8	0.0	0.0	0.0	88.3	0.9	-5.9	0.0	0.0	0.0	0.0	0.0	-6.7
542	421848.61	5411636.66	368.63	0	D	125	57.1	25.8	0.0	0.0	0.0	88.3	3.0	1.7	0.0	0.0	0.0	0.0	0.0	-10.0
542	421848.61	5411636.66	368.63	0	D	250	64.0	25.8	0.0	0.0	0.0	88.3	7.6	-0.8	0.0	0.0	0.0	0.0	0.0	-5.3
542	421848.61	5411636.66	368.63	0	D	500	61.9	25.8	0.0	0.0	0.0	88.3	14.1	-2.2	0.0	0.0	0.0	0.0	0.0	-12.4
542	421848.61	5411636.66	368.63	0	D	1000	63.0	25.8	0.0	0.0	0.0	88.3	26.7	-2.2	0.0	0.0	0.0	0.0	0.0	-24.0
542	421848.61	5411636.66	368.63	0	D	2000	60.1	25.8	0.0	0.0	0.0	88.3	70.6	-2.2	0.0	0.0	0.0	0.0	0.0	-70.7
542	421848.61	5411636.66	368.63	0	D	4000	55.1	25.8	0.0	0.0	0.0	88.3	239.3	-2.2	0.0	0.0	0.0	0.0	0.0	-244.5
542	421848.61	5411636.66	368.63	0	D	8000	46.0	25.8	0.0	0.0	0.0	88.3	853.5	-2.2	0.0	0.0	0.0	0.0	0.0	-867.8
542	421848.61	5411636.66	368.63	0	N	32	25.2	25.8	-188.0	0.0	0.0	88.3	0.2	-5.9	0.0	0.0	0.0	0.0	0.0	-219.6
542	421848.61	5411636.66	368.63	0	N	63	50.7	25.8	-188.0	0.0	0.0	88.3	0.9	-5.9	0.0	0.0	0.0	0.0	0.0	-194.7
542	421848.61	5411636.66	368.63	0	N	125	57.1	25.8	-188.0	0.0	0.0	88.3	3.0	1.7	0.0	0.0	0.0	0.0	0.0	-198.0
542	421848.61	5411636.66	368.63	0	N	250	64.0	25.8	-188.0	0.0	0.0	88.3	7.6	-0.8	0.0	0.0	0.0	0.0	0.0	-193.3
542	421848.61	5411636.66	368.63	0	N	500	61.9	25.8	-188.0	0.0	0.0	88.3	14.1	-2.2	0.0	0.0	0.0	0.0	0.0	-200.4
542	421848.61	5411636.66	368.63	0	N	1000	63.0	25.8	-188.0	0.0	0.0	88.3	26.7	-2.2	0.0	0.0	0.0	0.0	0.0	-212.0
542	421848.61	5411636.66	368.63	0	N	2000	60.1	25.8	-188.0	0.0	0.0	88.3	70.6	-2.2	0.0	0.0	0.0	0.0	0.0	-258.7
542	421848.61	5411636.66	368.63	0	N	4000	55.1	25.8	-188.0	0.0	0.0	88.3	239.3	-2.2	0.0	0.0	0.0	0.0	0.0	-432.5
542	421848.61	5411636.66	368.63	0	N	8000	46.0	25.8	-188.0	0.0	0.0	88.3	853.5	-2.2	0.0	0.0	0.0	0.0	0.0	-1055.8
542	421848.61	5411636.66	368.63	0	E	32	25.2	25.8	-188.0	0.0	0.0	88.3	0.2	-5.9	0.0	0.0	0.0	0.0	0.0	-219.6
542	421848.61	5411636.66	368.63	0	E	63	50.7	25.8	-188.0	0.0	0.0	88.3	0.9	-5.9	0.0	0.0	0.0	0.0	0.0	-194.7
542	421848.61	5411636.66	368.63	0	E	125	57.1	25.8	-188.0	0.0	0.0	88.3	3.0	1.7	0.0	0.0	0.0	0.0	0.0	-198.0
542	421848.61	5411636.66	368.63	0	E	250	64.0	25.8	-188.0	0.0	0.0	88.3	7.6	-0.8	0.0	0.0	0.0	0.0	0.0	-193.3
542	421848.61	5411636.66	368.63	0	E	500	61.9	25.8	-188.0	0.0	0.0	88.3	14.1	-2.2	0.0	0.0	0.0	0.0	0.0	-200.4
542	421848.61	5411636.66	368.63	0	E	1000	63.0	25.8	-188.0	0.0	0.0	88.3	26.7	-2.2	0.0	0.0	0.0	0.0	0.0	-212.0
542	421848.61	5411636.66	368.63	0	E	2000	60.1	25.8	-188.0	0.0	0.0	88.3	70.6	-2.2	0.0	0.0	0.0	0.0	0.0	-258.7
542	421848.61	5411636.66	368.63	0	E	4000	55.1	25.8	-188.0	0.0	0.0	88.3	239.3	-2.2	0.0	0.0	0.0	0.0	0.0	-432.5
542	421848.61	5411636.66	368.63	0	E	8000	46.0	25.8	-188.0	0.0	0.0	88.3	853.5	-2.2	0.0	0.0	0.0	0.0	0.0	-1055.8
547	423611.27	5411703.78	364.95	0	D	32	25.2	22.8	0.0	0.0	0.0	86.7	0.2	-5.9	0.0	0.0	0.0	0.0	0.0	-33.0
547	423611.27	5411703.78	364.95	0	D	63	50.7	22.8	0.0	0.0	0.0	86.7	0.7	-5.9	0.0	0.0	0.0	0.0	0.0	-8.1
547	423611.27	5411703.78	364.95	0	D	125	57.1	22.8	0.0	0.0	0.0	86.7	2.5	0.8	0.0	0.0	0.0	0.0	0.0	-10.1
547	423611.27	5411703.78	364.95	0	D	250	64.0	22.8	0.0	0.0	0.0	86.7	6.4	-1.6	0.0	0.0	0.0	0.0	0.0	-4.6
547	423611.27	5411703.78	364.95	0	D	500	61.9	22.8	0.0	0.0	0.0	86.7	11.8	-3.0	0.0	0.0	0.0	0.0	0.0	-10.8
547	423611.27	5411703.78	364.95	0	D	1000	63.0	22.8	0.0	0.0	0.0	86.7	22.3	-3.0	0.0	0.0	0.0	0.0	0.0	-20.2

Line Source, ISO 9613, Name: "TRL_TMA1", ID: ""																					
Nr.	X	Y	Z	Refl.	DEN	Freq.	Lw	l/a	Optime	K0	Dc	Adiv	Aatm	Agr	Afol	Ahous	Abar	Cmet	RL	Lr
	(m)	(m)	(m)			(Hz)	dB(A)	dB	dB	(dB)	(dB)	(dB)	(dB)	(dB)	(dB)	(dB)	(dB)	(dB)	(dB)	dB(A)
547	423611.27	5411703.78	364.95	0	D	2000	60.1	22.8	0.0	0.0	0.0	86.7	59.0	-3.0	0.0	0.0	0.0	0.0	0.0	-59.8
547	423611.27	5411703.78	364.95	0	D	4000	55.1	22.8	0.0	0.0	0.0	86.7	200.2	-3.0	0.0	0.0	0.0	0.0	0.0	-206.0
547	423611.27	5411703.78	364.95	0	D	8000	46.0	22.8	0.0	0.0	0.0	86.7	714.0	-3.0	0.0	0.0	0.0	0.0	0.0	-728.9
547	423611.27	5411703.78	364.95	0	N	32	25.2	22.8	-188.0	0.0	0.0	86.7	0.2	-5.9	0.0	0.0	0.0	0.0	0.0	-221.0
547	423611.27	5411703.78	364.95	0	N	63	50.7	22.8	-188.0	0.0	0.0	86.7	0.7	-5.9	0.0	0.0	0.0	0.0	0.0	-196.1
547	423611.27	5411703.78	364.95	0	N	125	57.1	22.8	-188.0	0.0	0.0	86.7	2.5	0.8	0.0	0.0	0.0	0.0	0.0	-198.1
547	423611.27	5411703.78	364.95	0	N	250	64.0	22.8	-188.0	0.0	0.0	86.7	6.4	-1.6	0.0	0.0	0.0	0.0	0.0	-192.6
547	423611.27	5411703.78	364.95	0	N	500	61.9	22.8	-188.0	0.0	0.0	86.7	11.8	-3.0	0.0	0.0	0.0	0.0	0.0	-198.8
547	423611.27	5411703.78	364.95	0	N	1000	63.0	22.8	-188.0	0.0	0.0	86.7	22.3	-3.0	0.0	0.0	0.0	0.0	0.0	-208.2
547	423611.27	5411703.78	364.95	0	N	2000	60.1	22.8	-188.0	0.0	0.0	86.7	59.0	-3.0	0.0	0.0	0.0	0.0	0.0	-247.8
547	423611.27	5411703.78	364.95	0	N	4000	55.1	22.8	-188.0	0.0	0.0	86.7	200.2	-3.0	0.0	0.0	0.0	0.0	0.0	-394.0
547	423611.27	5411703.78	364.95	0	N	8000	46.0	22.8	-188.0	0.0	0.0	86.7	714.0	-3.0	0.0	0.0	0.0	0.0	0.0	-916.9
547	423611.27	5411703.78	364.95	0	E	32	25.2	22.8	-188.0	0.0	0.0	86.7	0.2	-5.9	0.0	0.0	0.0	0.0	0.0	-221.0
547	423611.27	5411703.78	364.95	0	E	63	50.7	22.8	-188.0	0.0	0.0	86.7	0.7	-5.9	0.0	0.0	0.0	0.0	0.0	-196.1
547	423611.27	5411703.78	364.95	0	E	125	57.1	22.8	-188.0	0.0	0.0	86.7	2.5	0.8	0.0	0.0	0.0	0.0	0.0	-198.1
547	423611.27	5411703.78	364.95	0	E	250	64.0	22.8	-188.0	0.0	0.0	86.7	6.4	-1.6	0.0	0.0	0.0	0.0	0.0	-192.6
547	423611.27	5411703.78	364.95	0	E	500	61.9	22.8	-188.0	0.0	0.0	86.7	11.8	-3.0	0.0	0.0	0.0	0.0	0.0	-198.8
547	423611.27	5411703.78	364.95	0	E	1000	63.0	22.8	-188.0	0.0	0.0	86.7	22.3	-3.0	0.0	0.0	0.0	0.0	0.0	-208.2
547	423611.27	5411703.78	364.95	0	E	2000	60.1	22.8	-188.0	0.0	0.0	86.7	59.0	-3.0	0.0	0.0	0.0	0.0	0.0	-247.8
547	423611.27	5411703.78	364.95	0	E	4000	55.1	22.8	-188.0	0.0	0.0	86.7	200.2	-3.0	0.0	0.0	0.0	0.0	0.0	-394.0
547	423611.27	5411703.78	364.95	0	E	8000	46.0	22.8	-188.0	0.0	0.0	86.7	714.0	-3.0	0.0	0.0	0.0	0.0	0.0	-916.9
553	423576.63	5411590.41	364.00	0	D	32	25.2	19.8	0.0	0.0	0.0	86.6	0.2	-5.9	0.0	0.0	0.0	0.0	0.0	-35.9
553	423576.63	5411590.41	364.00	0	D	63	50.7	19.8	0.0	0.0	0.0	86.6	0.7	-5.9	0.0	0.0	0.0	0.0	0.0	-10.9
553	423576.63	5411590.41	364.00	0	D	125	57.1	19.8	0.0	0.0	0.0	86.6	2.5	0.9	0.0	0.0	0.0	0.0	0.0	-13.0
553	423576.63	5411590.41	364.00	0	D	250	64.0	19.8	0.0	0.0	0.0	86.6	6.3	-1.6	0.0	0.0	0.0	0.0	0.0	-7.5
553	423576.63	5411590.41	364.00	0	D	500	61.9	19.8	0.0	0.0	0.0	86.6	11.7	-3.0	0.0	0.0	0.0	0.0	0.0	-13.5
553	423576.63	5411590.41	364.00	0	D	1000	63.0	19.8	0.0	0.0	0.0	86.6	22.1	-3.0	0.0	0.0	0.0	0.0	0.0	-22.9
553	423576.63	5411590.41	364.00	0	D	2000	60.1	19.8	0.0	0.0	0.0	86.6	58.4	-3.0	0.0	0.0	0.0	0.0	0.0	-62.1
553	423576.63	5411590.41	364.00	0	D	4000	55.1	19.8	0.0	0.0	0.0	86.6	198.0	-3.0	0.0	0.0	0.0	0.0	0.0	-206.7
553	423576.63	5411590.41	364.00	0	D	8000	46.0	19.8	0.0	0.0	0.0	86.6	706.3	-3.0	0.0	0.0	0.0	0.0	0.0	-724.1
553	423576.63	5411590.41	364.00	0	N	32	25.2	19.8	-188.0	0.0	0.0	86.6	0.2	-5.9	0.0	0.0	0.0	0.0	0.0	-223.9
553	423576.63	5411590.41	364.00	0	N	63	50.7	19.8	-188.0	0.0	0.0	86.6	0.7	-5.9	0.0	0.0	0.0	0.0	0.0	-198.9
553	423576.63	5411590.41	364.00	0	N	125	57.1	19.8	-188.0	0.0	0.0	86.6	2.5	0.9	0.0	0.0	0.0	0.0	0.0	-201.0
553	423576.63	5411590.41	364.00	0	N	250	64.0	19.8	-188.0	0.0	0.0	86.6	6.3	-1.6	0.0	0.0	0.0	0.0	0.0	-195.5
553	423576.63	5411590.41	364.00	0	N	500	61.9	19.8	-188.0	0.0	0.0	86.6	11.7	-3.0	0.0	0.0	0.0	0.0	0.0	-201.5
553	423576.63	5411590.41	364.00	0	N	1000	63.0	19.8	-188.0	0.0	0.0	86.6	22.1	-3.0	0.0	0.0	0.0	0.0	0.0	-210.9
553	423576.63	5411590.41	364.00	0	N	2000	60.1	19.8	-188.0	0.0	0.0	86.6	58.4	-3.0	0.0	0.0	0.0	0.0	0.0	-250.1
553	423576.63	5411590.41	364.00	0	N	4000	55.1	19.8	-188.0	0.0	0.0	86.6	198.0	-3.0	0.0	0.0	0.0	0.0	0.0	-394.7
553	423576.63	5411590.41	364.00	0	N	8000	46.0	19.8	-188.0	0.0	0.0	86.6	706.3	-3.0	0.0	0.0	0.0	0.0	0.0	-912.1
553	423576.63	5411590.41	364.00	0	E	32	25.2	19.8	-188.0	0.0	0.0	86.6	0.2	-5.9	0.0	0.0	0.0	0.0	0.0	-223.9
553	423576.63	5411590.41	364.00	0	E	63	50.7	19.8	-188.0	0.0	0.0	86.6	0.7	-5.9	0.0	0.0	0.0	0.0	0.0	-198.9
553	423576.63	5411590.41	364.00	0	E	125	57.1	19.8	-188.0	0.0	0.0	86.6	2.5	0.9	0.0	0.0	0.0	0.0	0.0	-201.0
553	423576.63	5411590.41	364.00	0	E	250	64.0	19.8	-188.0	0.0	0.0	86.6	6.3	-1.6	0.0	0.0	0.0	0.0	0.0	-195.5
553	423576.63	5411590.41	364.00	0	E	500	61.9	19.8	-188.0	0.0	0.0	86.6	11.7	-3.0	0.0	0.0	0.0	0.0	0.0	-201.5
553	423576.63	5411590.41	364.00	0	E	1000	63.0	19.8	-188.0	0.0	0.0	86.6	22.1	-3.0	0.0	0.0	0.0	0.0	0.0	-210.9
553	423576.63	5411590.41	364.00	0	E	2000	60.1	19.8	-188.0	0.0	0.0	86.6	58.4	-3.0	0.0	0.0	0.0	0.0	0.0	-250.1
553	423576.63	5411590.41	364.00	0	E	4000	55.1	19.8	-188.0	0.0	0.0	86.6	198.0	-3.0	0.0	0.0	0.0	0.0	0.0	-394.7
553	423576.63	5411590.41	364.00	0	E	8000	46.0	19.8	-188.0	0.0	0.0	86.6	706.3	-3.0	0.0	0.0	0.0	0.0	0.0	-912.1

Line Source, ISO 9613, Name: "TRE_OP-OB", ID: ""																					
Nr.	X	Y	Z	Refl.	DEN	Freq.	Lw	l/a	Optime	K0	Dc	Adiv	Aatm	Agr	Afol	Ahous	Abar	Cmet	RL	Lr
	(m)	(m)	(m)			(Hz)	dB(A)	dB	dB	(dB)	(dB)	(dB)	(dB)	(dB)	(dB)	(dB)	(dB)	(dB)	(dB)	dB(A)
464	424882.86	5409587.72	350.54	0	DEN	32	28.5	26.3	0.0	0.0	0.0	82.3	0.1	-5.8	0.0	0.0	4.8	0.0	0.0	-26.6
464	424882.86	5409587.72	350.54	0	DEN	63	46.4	26.3	0.0	0.0	0.0	82.3	0.4	-5.8	0.0	0.0	4.8	0.0	0.0	-9.0
464	424882.86	5409587.72	350.54	0	DEN	125	53.3	26.3	0.0	0.0	0.0	82.3	1.5	2.2	0.0	0.0	2.6	0.0	0.0	-9.0
464	424882.86	5409587.72	350.54	0	DEN	250	54.1	26.3	0.0	0.0	0.0	82.3	3.8	-0.3	0.0	0.0	4.8	0.0	0.0	-10.2
464	424882.86	5409587.72	350.54	0	DEN	500	57.5	26.3	0.0	0.0	0.0	82.3	7.1	-1.7	0.0	0.0	4.8	0.0	0.0	-8.7
464	424882.86	5409587.72	350.54	0	DEN	1000	56.9	26.3	0.0	0.0	0.0	82.3	13.5	-1.7	0.0	0.0	4.8	0.0	0.0	-15.7
464	424882.86	5409587.72	350.54	0	DEN	2000	54.7	26.3	0.0	0.0	0.0	82.3	35.6	-1.7	0.0	0.0	4.8	0.0	0.0	-40.0
464	424882.86	5409587.72	350.54	0	DEN	4000	49.8	26.3	0.0	0.0	0.0	82.3	120.6	-1.7	0.0	0.0	4.8	0.0	0.0	-129.9
464	424882.86	5409587.72	350.54	0	DEN	8000	40.9	26.3	0.0	0.0	0.0	82.3	430.0	-1.7	0.0	0.0	4.8	0.0	0.0	-448.3
468	425584.45	5409336.16	338.66	0	DEN	32	28.5	24.7	0.0	0.0	0.0	80.6	0.1	-5.7	0.0	0.0	4.8	0.0	0.0	-26.6
468	425584.45	5409336.16	338.66	0	DEN	63	46.4	24.7	0.0	0.0	0.0	80.6	0.4	-5.7	0.0	0.0	4.8	0.0	0.0	-8.9

Line Source, ISO 9613, Name: "TRE_OP-OB", ID: ""																					
Nr.	X	Y	Z	Refl.	DEN	Freq.	Lw	l/a	Optime	K0	Dc	Adiv	Aatm	Agr	Afol	Ahous	Abar	Cmet	RL	Lr
	(m)	(m)	(m)			(Hz)	dB(A)	dB	dB	(dB)	(dB)	(dB)	(dB)	(dB)	(dB)	(dB)	(dB)	(dB)	(dB)	dB(A)
468	425584.45	5409336.16	338.66	0	DEN	125	53.3	24.7	0.0	0.0	0.0	80.6	1.2	2.3	0.0	0.0	2.5	0.0	0.0	-8.7
468	425584.45	5409336.16	338.66	0	DEN	250	54.1	24.7	0.0	0.0	0.0	80.6	3.2	-0.2	0.0	0.0	4.8	0.0	0.0	-9.6
468	425584.45	5409336.16	338.66	0	DEN	500	57.5	24.7	0.0	0.0	0.0	80.6	5.8	-1.6	0.0	0.0	4.8	0.0	0.0	-7.5
468	425584.45	5409336.16	338.66	0	DEN	1000	56.9	24.7	0.0	0.0	0.0	80.6	11.1	-1.6	0.0	0.0	4.8	0.0	0.0	-13.3
468	425584.45	5409336.16	338.66	0	DEN	2000	54.7	24.7	0.0	0.0	0.0	80.6	29.3	-1.6	0.0	0.0	4.8	0.0	0.0	-33.7
468	425584.45	5409336.16	338.66	0	DEN	4000	49.8	24.7	0.0	0.0	0.0	80.6	99.2	-1.6	0.0	0.0	4.8	0.0	0.0	-108.6
468	425584.45	5409336.16	338.66	0	DEN	8000	40.9	24.7	0.0	0.0	0.0	80.6	353.8	-1.6	0.0	0.0	4.8	0.0	0.0	-372.1
475	424344.42	5410176.96	360.56	0	DEN	32	28.5	27.6	0.0	0.0	0.0	84.0	0.1	-5.8	0.0	0.0	0.0	0.0	0.0	-22.2
475	424344.42	5410176.96	360.56	0	DEN	63	46.4	27.6	0.0	0.0	0.0	84.0	0.5	-5.8	0.0	0.0	0.0	0.0	0.0	-4.7
475	424344.42	5410176.96	360.56	0	DEN	125	53.3	27.6	0.0	0.0	0.0	84.0	1.8	1.7	0.0	0.0	0.0	0.0	0.0	-6.6
475	424344.42	5410176.96	360.56	0	DEN	250	54.1	27.6	0.0	0.0	0.0	84.0	4.7	-0.8	0.0	0.0	0.0	0.0	0.0	-6.2
475	424344.42	5410176.96	360.56	0	DEN	500	57.5	27.6	0.0	0.0	0.0	84.0	8.6	-2.2	0.0	0.0	0.0	0.0	0.0	-5.4
475	424344.42	5410176.96	360.56	0	DEN	1000	56.9	27.6	0.0	0.0	0.0	84.0	16.4	-2.2	0.0	0.0	0.0	0.0	0.0	-13.7
475	424344.42	5410176.96	360.56	0	DEN	2000	54.7	27.6	0.0	0.0	0.0	84.0	43.3	-2.2	0.0	0.0	0.0	0.0	0.0	-42.8
475	424344.42	5410176.96	360.56	0	DEN	4000	49.8	27.6	0.0	0.0	0.0	84.0	146.7	-2.2	0.0	0.0	0.0	0.0	0.0	-151.2
475	424344.42	5410176.96	360.56	0	DEN	8000	40.9	27.6	0.0	0.0	0.0	84.0	523.3	-2.2	0.0	0.0	0.0	0.0	0.0	-536.6
487	425299.74	5409343.89	349.02	0	DEN	32	28.5	24.5	0.0	0.0	0.0	81.1	0.1	-5.8	0.0	0.0	4.8	0.0	0.0	-27.3
487	425299.74	5409343.89	349.02	0	DEN	63	46.4	24.5	0.0	0.0	0.0	81.1	0.4	-5.8	0.0	0.0	4.8	0.0	0.0	-9.7
487	425299.74	5409343.89	349.02	0	DEN	125	53.3	24.5	0.0	0.0	0.0	81.1	1.3	4.7	0.0	0.0	0.1	0.0	0.0	-9.5
487	425299.74	5409343.89	349.02	0	DEN	250	54.1	24.5	0.0	0.0	0.0	81.1	3.4	1.4	0.0	0.0	3.4	0.0	0.0	-10.8
487	425299.74	5409343.89	349.02	0	DEN	500	57.5	24.5	0.0	0.0	0.0	81.1	6.2	-0.9	0.0	0.0	4.8	0.0	0.0	-9.3
487	425299.74	5409343.89	349.02	0	DEN	1000	56.9	24.5	0.0	0.0	0.0	81.1	11.8	-0.9	0.0	0.0	4.8	0.0	0.0	-15.5
487	425299.74	5409343.89	349.02	0	DEN	2000	54.7	24.5	0.0	0.0	0.0	81.1	31.1	-0.9	0.0	0.0	4.8	0.0	0.0	-37.0
487	425299.74	5409343.89	349.02	0	DEN	4000	49.8	24.5	0.0	0.0	0.0	81.1	105.4	-0.9	0.0	0.0	4.8	0.0	0.0	-116.2
487	425299.74	5409343.89	349.02	0	DEN	8000	40.9	24.5	0.0	0.0	0.0	81.1	375.9	-0.9	0.0	0.0	4.8	0.0	0.0	-395.7
493	425705.23	5409422.07	317.83	0	DEN	32	28.5	23.6	0.0	0.0	0.0	80.6	0.1	-5.7	0.0	0.0	4.8	0.0	0.0	-27.7
493	425705.23	5409422.07	317.83	0	DEN	63	46.4	23.6	0.0	0.0	0.0	80.6	0.4	-5.7	0.0	0.0	4.8	0.0	0.0	-10.1
493	425705.23	5409422.07	317.83	0	DEN	125	53.3	23.6	0.0	0.0	0.0	80.6	1.2	2.2	0.0	0.0	2.6	0.0	0.0	-9.8
493	425705.23	5409422.07	317.83	0	DEN	250	54.1	23.6	0.0	0.0	0.0	80.6	3.2	-0.3	0.0	0.0	4.9	0.0	0.0	-10.7
493	425705.23	5409422.07	317.83	0	DEN	500	57.5	23.6	0.0	0.0	0.0	80.6	5.8	-1.6	0.0	0.0	4.9	0.0	0.0	-8.7
493	425705.23	5409422.07	317.83	0	DEN	1000	56.9	23.6	0.0	0.0	0.0	80.6	11.1	-1.6	0.0	0.0	5.1	0.0	0.0	-14.7
493	425705.23	5409422.07	317.83	0	DEN	2000	54.7	23.6	0.0	0.0	0.0	80.6	29.2	-1.6	0.0	0.0	5.4	0.0	0.0	-35.3
493	425705.23	5409422.07	317.83	0	DEN	4000	49.8	23.6	0.0	0.0	0.0	80.6	99.1	-1.6	0.0	0.0	5.9	0.0	0.0	-110.6
493	425705.23	5409422.07	317.83	0	DEN	8000	40.9	23.6	0.0	0.0	0.0	80.6	353.5	-1.6	0.0	0.0	6.8	0.0	0.0	-374.8
509	425499.98	5409457.87	299.87	0	DEN	32	28.5	22.8	0.0	0.0	0.0	81.0	0.1	-5.8	0.0	0.0	5.2	0.0	0.0	-29.3
509	425499.98	5409457.87	299.87	0	DEN	63	46.4	22.8	0.0	0.0	0.0	81.0	0.4	-5.8	0.0	0.0	5.5	0.0	0.0	-12.0
509	425499.98	5409457.87	299.87	0	DEN	125	53.3	22.8	0.0	0.0	0.0	81.0	1.3	2.2	0.0	0.0	4.0	0.0	0.0	-12.4
509	425499.98	5409457.87	299.87	0	DEN	250	54.1	22.8	0.0	0.0	0.0	81.0	3.3	-0.3	0.0	0.0	7.2	0.0	0.0	-14.4
509	425499.98	5409457.87	299.87	0	DEN	500	57.5	22.8	0.0	0.0	0.0	81.0	6.1	-1.7	0.0	0.0	8.8	0.0	0.0	-14.0
509	425499.98	5409457.87	299.87	0	DEN	1000	56.9	22.8	0.0	0.0	0.0	81.0	11.6	-1.7	0.0	0.0	10.8	0.0	0.0	-22.1
509	425499.98	5409457.87	299.87	0	DEN	2000	54.7	22.8	0.0	0.0	0.0	81.0	30.7	-1.7	0.0	0.0	13.3	0.0	0.0	-45.8
509	425499.98	5409457.87	299.87	0	DEN	4000	49.8	22.8	0.0	0.0	0.0	81.0	104.1	-1.7	0.0	0.0	16.0	0.0	0.0	-126.8
509	425499.98	5409457.87	299.87	0	DEN	8000	40.9	22.8	0.0	0.0	0.0	81.0	371.2	-1.7	0.0	0.0	18.8	0.0	0.0	-405.7
510	424642.58	5409858.65	354.60	0	DEN	32	28.5	24.8	0.0	0.0	0.0	83.1	0.1	-5.8	0.0	0.0	4.8	0.0	0.0	-29.0
510	424642.58	5409858.65	354.60	0	DEN	63	46.4	24.8	0.0	0.0	0.0	83.1	0.5	-5.8	0.0	0.0	4.8	0.0	0.0	-11.5
510	424642.58	5409858.65	354.60	0	DEN	125	53.3	24.8	0.0	0.0	0.0	83.1	1.7	2.0	0.0	0.0	2.7	0.0	0.0	-11.5
510	424642.58	5409858.65	354.60	0	DEN	250	54.1	24.8	0.0	0.0	0.0	83.1	4.2	-0.5	0.0	0.0	4.8	0.0	0.0	-12.8
510	424642.58	5409858.65	354.60	0	DEN	500	57.5	24.8	0.0	0.0	0.0	83.1	7.8	-1.9	0.0	0.0	4.8	0.0	0.0	-11.6
510	424642.58	5409858.65	354.60	0	DEN	1000	56.9	24.8	0.0	0.0	0.0	83.1	14.8	-1.9	0.0	0.0	4.8	0.0	0.0	-19.2
510	424642.58	5409858.65	354.60	0	DEN	2000	54.7	24.8	0.0	0.0	0.0	83.1	39.1	-1.9	0.0	0.0	4.8	0.0	0.0	-45.6
510	424642.58	5409858.65	354.60	0	DEN	4000	49.8	24.8	0.0	0.0	0.0	83.1	132.4	-1.9	0.0	0.0	4.8	0.0	0.0	-143.9
510	424642.58	5409858.65	354.60	0	DEN	8000	40.9	24.8	0.0	0.0	0.0	83.1	472.3	-1.9	0.0	0.0	4.8	0.0	0.0	-492.7
521	425100.99	5409404.00	349.02	0	DEN	32	28.5	21.5	0.0	0.0	0.0	81.6	0.1	-5.8	0.0	0.0	4.8	0.0	0.0	-30.7
521	425100.99	5409404.00	349.02	0	DEN	63	46.4	21.5	0.0	0.0	0.0	81.6	0.4	-5.8	0.0	0.0	4.8	0.0	0.0	-13.1
521	425100.99	5409404.00	349.02	0	DEN	125	53.3	21.5	0.0	0.0	0.0	81.6	1.4	3.0	0.0	0.0	1.8	0.0	0.0	-13.0
521	425100.99	5409404.00	349.02	0	DEN	250	54.1	21.5	0.0	0.0	0.0	81.6	3.5	0.3	0.0	0.0	4.4	0.0	0.0	-14.3
521	425100.99	5409404.00	349.02	0	DEN	500	57.5	21.5	0.0	0.0	0.0	81.6	6.5	-1.3	0.0	0.0	4.8	0.0	0.0	-12.6
521	425100.99	5409404.00	349.02	0	DEN	1000	56.9	21.5	0.0	0.0	0.0	81.6	12.4	-1.3	0.0	0.0	4.8	0.0	0.0	-19.1
521	425100.99	5409404.00	349.02	0	DEN	2000	54.7	21.5	0.0	0.0	0.0	81.6	32.8	-1.3	0.0	0.0	4.8	0.0	0.0	-41.7
521	425100.99	5409404.00	349.02	0	DEN	4000	49.8	21.5	0.0	0.0	0.0	81.6	111.3	-1.3	0.0	0.0	4.8	0.0	0.0	-125.0
521	425100.99	5409404.00	349.02	0	DEN	8000	40.9	21.5	0.0	0.0	0.0	81.6	396.9	-1.3	0.0	0.0	4.8	0.0	0.0	-419.6
525	425776.63	5409373.74	328.24	0	DEN	32	28.5	20.0	0.0	0.0	0.0	80.4	0.1	-5.7	0.0	0.0	4.8	0.0	0.0	-31.0
525	425776.63	5409373.74	328.24	0	DEN	63	46.4	20.0	0.0	0.0	0.0	80.4	0.4	-5.7	0.0	0.0	4.8	0.0	0.0	-13.4

Line Source, ISO 9613, Name: "TRE_OP-OB", ID: ""																					
Nr.	X	Y	Z	Refl.	DEN	Freq.	Lw	l/a	Optime	K0	Dc	Adiv	Aatm	Agr	Afol	Ahous	Abar	Cmet	RL	Lr
	(m)	(m)	(m)			(Hz)	dB(A)	dB	dB	(dB)	(dB)	(dB)	(dB)	(dB)	(dB)	(dB)	(dB)	(dB)	(dB)	dB(A)
525	425776.63	5409373.74	328.24	0	DEN	125	53.3	20.0	0.0	0.0	0.0	80.4	1.2	2.3	0.0	0.0	2.5	0.0	0.0	-13.1
525	425776.63	5409373.74	328.24	0	DEN	250	54.1	20.0	0.0	0.0	0.0	80.4	3.1	-0.2	0.0	0.0	4.8	0.0	0.0	-14.0
525	425776.63	5409373.74	328.24	0	DEN	500	57.5	20.0	0.0	0.0	0.0	80.4	5.7	-1.6	0.0	0.0	4.9	0.0	0.0	-11.9
525	425776.63	5409373.74	328.24	0	DEN	1000	56.9	20.0	0.0	0.0	0.0	80.4	10.8	-1.6	0.0	0.0	5.1	0.0	0.0	-17.7
525	425776.63	5409373.74	328.24	0	DEN	2000	54.7	20.0	0.0	0.0	0.0	80.4	28.4	-1.6	0.0	0.0	5.3	0.0	0.0	-37.9
525	425776.63	5409373.74	328.24	0	DEN	4000	49.8	20.0	0.0	0.0	0.0	80.4	96.5	-1.6	0.0	0.0	5.8	0.0	0.0	-111.3
525	425776.63	5409373.74	328.24	0	DEN	8000	40.9	20.0	0.0	0.0	0.0	80.4	344.1	-1.6	0.0	0.0	6.7	0.0	0.0	-368.7
530	424083.09	5410477.06	364.00	0	DEN	32	28.5	23.6	0.0	0.0	0.0	84.8	0.2	-5.8	0.0	0.0	0.0	0.0	0.0	-27.0
530	424083.09	5410477.06	364.00	0	DEN	63	46.4	23.6	0.0	0.0	0.0	84.8	0.6	-5.8	0.0	0.0	0.0	0.0	0.0	-9.5
530	424083.09	5410477.06	364.00	0	DEN	125	53.3	23.6	0.0	0.0	0.0	84.8	2.0	1.4	0.0	0.0	0.0	0.0	0.0	-11.3
530	424083.09	5410477.06	364.00	0	DEN	250	54.1	23.6	0.0	0.0	0.0	84.8	5.1	-1.0	0.0	0.0	0.0	0.0	0.0	-11.1
530	424083.09	5410477.06	364.00	0	DEN	500	57.5	23.6	0.0	0.0	0.0	84.8	9.4	-2.4	0.0	0.0	0.0	0.0	0.0	-10.7
530	424083.09	5410477.06	364.00	0	DEN	1000	56.9	23.6	0.0	0.0	0.0	84.8	17.8	-2.4	0.0	0.0	0.0	0.0	0.0	-19.7
530	424083.09	5410477.06	364.00	0	DEN	2000	54.7	23.6	0.0	0.0	0.0	84.8	47.1	-2.4	0.0	0.0	0.0	0.0	0.0	-51.2
530	424083.09	5410477.06	364.00	0	DEN	4000	49.8	23.6	0.0	0.0	0.0	84.8	159.7	-2.4	0.0	0.0	0.0	0.0	0.0	-168.7
530	424083.09	5410477.06	364.00	0	DEN	8000	40.9	23.6	0.0	0.0	0.0	84.8	569.8	-2.4	0.0	0.0	0.0	0.0	0.0	-587.6
548	424247.40	5410755.82	364.00	0	DEN	32	28.5	20.9	0.0	0.0	0.0	84.9	0.2	-5.8	0.0	0.0	0.0	0.0	0.0	-29.9
548	424247.40	5410755.82	364.00	0	DEN	63	46.4	20.9	0.0	0.0	0.0	84.9	0.6	-5.8	0.0	0.0	0.0	0.0	0.0	-12.4
548	424247.40	5410755.82	364.00	0	DEN	125	53.3	20.9	0.0	0.0	0.0	84.9	2.0	1.2	0.0	0.0	0.0	0.0	0.0	-14.0
548	424247.40	5410755.82	364.00	0	DEN	250	54.1	20.9	0.0	0.0	0.0	84.9	5.2	-1.2	0.0	0.0	0.0	0.0	0.0	-13.9
548	424247.40	5410755.82	364.00	0	DEN	500	57.5	20.9	0.0	0.0	0.0	84.9	9.6	-2.6	0.0	0.0	0.0	0.0	0.0	-13.5
548	424247.40	5410755.82	364.00	0	DEN	1000	56.9	20.9	0.0	0.0	0.0	84.9	18.2	-2.6	0.0	0.0	0.0	0.0	0.0	-22.7
548	424247.40	5410755.82	364.00	0	DEN	2000	54.7	20.9	0.0	0.0	0.0	84.9	48.1	-2.6	0.0	0.0	0.0	0.0	0.0	-54.8
548	424247.40	5410755.82	364.00	0	DEN	4000	49.8	20.9	0.0	0.0	0.0	84.9	162.9	-2.6	0.0	0.0	0.0	0.0	0.0	-174.6
548	424247.40	5410755.82	364.00	0	DEN	8000	40.9	20.9	0.0	0.0	0.0	84.9	581.2	-2.6	0.0	0.0	0.0	0.0	0.0	-601.7
549	424153.08	5410680.04	364.00	0	DEN	32	28.5	20.9	0.0	0.0	0.0	84.9	0.2	-5.8	0.0	0.0	0.0	0.0	0.0	-29.9
549	424153.08	5410680.04	364.00	0	DEN	63	46.4	20.9	0.0	0.0	0.0	84.9	0.6	-5.8	0.0	0.0	0.0	0.0	0.0	-12.5
549	424153.08	5410680.04	364.00	0	DEN	125	53.3	20.9	0.0	0.0	0.0	84.9	2.0	1.3	0.0	0.0	0.0	0.0	0.0	-14.2
549	424153.08	5410680.04	364.00	0	DEN	250	54.1	20.9	0.0	0.0	0.0	84.9	5.2	-1.2	0.0	0.0	0.0	0.0	0.0	-14.1
549	424153.08	5410680.04	364.00	0	DEN	500	57.5	20.9	0.0	0.0	0.0	84.9	9.6	-2.5	0.0	0.0	0.0	0.0	0.0	-13.7
549	424153.08	5410680.04	364.00	0	DEN	1000	56.9	20.9	0.0	0.0	0.0	84.9	18.2	-2.5	0.0	0.0	0.0	0.0	0.0	-22.9
549	424153.08	5410680.04	364.00	0	DEN	2000	54.7	20.9	0.0	0.0	0.0	84.9	48.1	-2.5	0.0	0.0	0.0	0.0	0.0	-55.0
549	424153.08	5410680.04	364.00	0	DEN	4000	49.8	20.9	0.0	0.0	0.0	84.9	163.1	-2.5	0.0	0.0	0.0	0.0	0.0	-174.9
549	424153.08	5410680.04	364.00	0	DEN	8000	40.9	20.9	0.0	0.0	0.0	84.9	581.7	-2.5	0.0	0.0	0.0	0.0	0.0	-602.4
550	424354.98	5410780.20	364.00	0	DEN	32	28.5	20.3	0.0	0.0	0.0	84.8	0.2	-5.8	0.0	0.0	0.0	0.0	0.0	-30.4
550	424354.98	5410780.20	364.00	0	DEN	63	46.4	20.3	0.0	0.0	0.0	84.8	0.6	-5.8	0.0	0.0	0.0	0.0	0.0	-12.9
550	424354.98	5410780.20	364.00	0	DEN	125	53.3	20.3	0.0	0.0	0.0	84.8	2.0	1.2	0.0	0.0	0.0	0.0	0.0	-14.5
550	424354.98	5410780.20	364.00	0	DEN	250	54.1	20.3	0.0	0.0	0.0	84.8	5.1	-1.3	0.0	0.0	0.0	0.0	0.0	-14.3
550	424354.98	5410780.20	364.00	0	DEN	500	57.5	20.3	0.0	0.0	0.0	84.8	9.5	-2.7	0.0	0.0	0.0	0.0	0.0	-13.9
550	424354.98	5410780.20	364.00	0	DEN	1000	56.9	20.3	0.0	0.0	0.0	84.8	18.0	-2.7	0.0	0.0	0.0	0.0	0.0	-23.0
550	424354.98	5410780.20	364.00	0	DEN	2000	54.7	20.3	0.0	0.0	0.0	84.8	47.6	-2.7	0.0	0.0	0.0	0.0	0.0	-54.8
550	424354.98	5410780.20	364.00	0	DEN	4000	49.8	20.3	0.0	0.0	0.0	84.8	161.3	-2.7	0.0	0.0	0.0	0.0	0.0	-173.4
550	424354.98	5410780.20	364.00	0	DEN	8000	40.9	20.3	0.0	0.0	0.0	84.8	575.4	-2.7	0.0	0.0	0.0	0.0	0.0	-596.4
554	424087.26	5410622.11	364.00	0	DEN	32	28.5	17.5	0.0	0.0	0.0	84.9	0.2	-5.8	0.0	0.0	0.0	0.0	0.0	-33.3
554	424087.26	5410622.11	364.00	0	DEN	63	46.4	17.5	0.0	0.0	0.0	84.9	0.6	-5.8	0.0	0.0	0.0	0.0	0.0	-15.8
554	424087.26	5410622.11	364.00	0	DEN	125	53.3	17.5	0.0	0.0	0.0	84.9	2.0	1.4	0.0	0.0	0.0	0.0	0.0	-17.5
554	424087.26	5410622.11	364.00	0	DEN	250	54.1	17.5	0.0	0.0	0.0	84.9	5.2	-1.1	0.0	0.0	0.0	0.0	0.0	-17.4
554	424087.26	5410622.11	364.00	0	DEN	500	57.5	17.5	0.0	0.0	0.0	84.9	9.6	-2.5	0.0	0.0	0.0	0.0	0.0	-17.0
554	424087.26	5410622.11	364.00	0	DEN	1000	56.9	17.5	0.0	0.0	0.0	84.9	18.2	-2.5	0.0	0.0	0.0	0.0	0.0	-26.3
554	424087.26	5410622.11	364.00	0	DEN	2000	54.7	17.5	0.0	0.0	0.0	84.9	48.1	-2.5	0.0	0.0	0.0	0.0	0.0	-58.3
554	424087.26	5410622.11	364.00	0	DEN	4000	49.8	17.5	0.0	0.0	0.0	84.9	163.1	-2.5	0.0	0.0	0.0	0.0	0.0	-178.3
554	424087.26	5410622.11	364.00	0	DEN	8000	40.9	17.5	0.0	0.0	0.0	84.9	581.8	-2.5	0.0	0.0	0.0	0.0	0.0	-605.9
555	425819.99	5409402.62	327.35	0	DEN	32	28.5	11.4	0.0	0.0	0.0	80.4	0.1	-5.7	0.0	0.0	4.8	0.0	0.0	-39.6
555	425819.99	5409402.62	327.35	0	DEN	63	46.4	11.4	0.0	0.0	0.0	80.4	0.4	-5.7	0.0	0.0	4.8	0.0	0.0	-22.0
555	425819.99	5409402.62	327.35	0	DEN	125	53.3	11.4	0.0	0.0	0.0	80.4	1.2	2.2	0.0	0.0	2.6	0.0	0.0	-21.7
555	425819.99	5409402.62	327.35	0	DEN	250	54.1	11.4	0.0	0.0	0.0	80.4	3.1	-0.2	0.0	0.0	4.8	0.0	0.0	-22.5
555	425819.99	5409402.62	327.35	0	DEN	500	57.5	11.4	0.0	0.0	0.0	80.4	5.7	-1.6	0.0	0.0	4.8	0.0	0.0	-20.3
555	425819.99	5409402.62	327.35	0	DEN	1000	56.9	11.4	0.0	0.0	0.0	80.4	10.8	-1.6	0.0	0.0	4.8	0.0	0.0	-26.0
555	425819.99	5409402.62	327.35	0	DEN	2000	54.7	11.4	0.0	0.0	0.0	80.4	28.4	-1.6	0.0	0.0	4.8	0.0	0.0	-45.9
555	425819.99	5409402.62	327.35	0	DEN	4000	49.8	11.4	0.0	0.0	0.0	80.4	96.5	-1.6	0.0	0.0	4.9	0.0	0.0	-118.9
555	425819.99	5409402.62	327.35	0	DEN	8000	40.9	11.4	0.0	0.0	0.0	80.4	344.0	-1.6	0.0	0.0	5.0	0.0	0.0	-375.5
556	424049.21	5410596.41	364.00	0	DEN	32	28.5	15.6	0.0	0.0	0.0	85.0	0.2	-5.8	0.0	0.0	0.0	0.0	0.0	-35.2
556	424049.21	5410596.41	364.00	0	DEN	63	46.4	15.6	0.0	0.0	0.0	85.0	0.6	-5.8	0.0	0.0	0.0	0.0	0.0	-17.7

Line Source, ISO 9613, Name: "TRE_OP-OB", ID: ""																				
Nr.	X	Y	Z	Refl.	DEN	Freq.	Lw	l/a	Optime	K0	Dc	Adiv	Aatm	Agr	Afol	Ahous	Abar	Cmet	RL	Lr
	(m)	(m)	(m)			(Hz)	dB(A)	dB	dB	(dB)	(dB)	(dB)	(dB)	(dB)	(dB)	(dB)	(dB)	(dB)	(dB)	dB(A)
556	424049.21	5410596.41	364.00	0	DEN	125	53.3	15.6	0.0	0.0	0.0	85.0	2.0	1.3	0.0	0.0	0.0	0.0	0.0	-19.5
556	424049.21	5410596.41	364.00	0	DEN	250	54.1	15.6	0.0	0.0	0.0	85.0	5.2	-1.1	0.0	0.0	0.0	0.0	0.0	-19.4
556	424049.21	5410596.41	364.00	0	DEN	500	57.5	15.6	0.0	0.0	0.0	85.0	9.6	-2.5	0.0	0.0	0.0	0.0	0.0	-19.0
556	424049.21	5410596.41	364.00	0	DEN	1000	56.9	15.6	0.0	0.0	0.0	85.0	18.2	-2.5	0.0	0.0	0.0	0.0	0.0	-28.2
556	424049.21	5410596.41	364.00	0	DEN	2000	54.7	15.6	0.0	0.0	0.0	85.0	48.2	-2.5	0.0	0.0	0.0	0.0	0.0	-60.3
556	424049.21	5410596.41	364.00	0	DEN	4000	49.8	15.6	0.0	0.0	0.0	85.0	163.3	-2.5	0.0	0.0	0.0	0.0	0.0	-180.4
556	424049.21	5410596.41	364.00	0	DEN	8000	40.9	15.6	0.0	0.0	0.0	85.0	582.6	-2.5	0.0	0.0	0.0	0.0	0.0	-608.6